APPENDIX 5B

System Impact Study

System Impact Study

Generation Interconnection

Ramco Generating Two

Humboldt Energy Facility Project

REVISION 1

(Supersedes the April 28, 2005 Report)

Pacific Gas and Electric Company

WE DELIVER ENERGY.

January 20, 2006

Table of Contents

1.	Executive Summary	1
2.	Project and Interconnection Information	2
3.	Study Assumptions	3
4.	Power Flow Study Base Cases	4
5.	Study Criteria Summary	5
5.1	Steady State Study Criteria – Normal Overloads	5
5.2	Steady State Study Criteria – Emergency Overloads	5
5.3	Dynamic Stability Study Criteria	5
6.	Steady State Power Flow Study and Results	6
6.1	Contingencies	6
6.2	Results	7
7.	Dynamic Stability Study and Results	8
7.1	Dynamic Stability Study Scenarios	8
7.2	Parameters Monitored to Evaluate System Stability Performance	9
7.3	Results	10
8.	System Protection Study	11
8.1	System Protection Study Input Data	11
8.2	Results	12
8.3	Preliminary Protection Requirements	13
9.	Substation Evaluation	13
9.1	Overstressed Breakers	13
9.2	Bus Loading Evaluation	14
10.	Reactive Power Deficiency Analysis	14
10.1	Description	14
10.2	Results	14
11.	Mitigation	15
11.1	Summary of Worst Overloads	15
11.2	Category “B” Overload Mitigation	16
11.3	New Category “C” Overload Mitigation	16
11.4	Pre-Project Overload Mitigation	16
12.	Environmental Evaluation / Permitting	17
13.	Study Updates	18

14. Stand-By Power 19

Appendices:

A. Study Plan
B. Contingency Lists for Outages - Autocon Input Files
C. Power Flow Results-Autocon Comparison Files
D. Power Flow Plots
E. Generator Machine Dynamic Data
F. Dynamic Stability Plots
G. Preliminary Protection Requirement

1. Executive Summary

Ramco Generating Two (Ramco) proposes to interconnect a new 166.38 MW generation facility to replace the existing generation at Pacific Gas & Electric's (PG&E) Humboldt Bay Power Plant Substation (HBPP) near Eureka, California. The proposed project is called the Humboldt Energy Facility Project (Project). The commercial operation date of the Project is August 2008. The California Independent System Operator Corporation (CAISO) and PG&E determined that a System Impact Study (SIS) was required for the Project. The SIS determined:

- Transmission system impacts caused solely by the addition of the Project
- System reinforcements necessary to mitigate the adverse impact of the Project under various system conditions

To determine the system impacts caused by the interconnection of the Project, studies were performed using 2008 summer peak, summer off-peak, and winter peak full loop base cases. The studies included:

- Steady State Power Flow
- Dynamic Stability Analysis
- System Protection
- Reactive Power Deficiency Analysis

PG&E's Steady State Power Flow Analysis has concluded that the interconnection of the Project would cause one new Category "B" and one new Category "C" emergency overload to the same facility:

- Humboldt-Trinity 115 kV Line (Summer Off Peak Category "B" and "C")

The interconnection of the Project would also exacerbate five pre-project Category "C" overloads to the following four facilities:

- Humboldt Bay-Eureka 60 kV Line (summer and winter peak)
- Bridgeville 115/60 kV Bank # 1 (winter peak)
- Humboldt 115/60 kV Bank # 1 (winter peak)
- Humboldt 115/60 kV Bank # 2 (winter peak)

The Dynamic Stability Studies indicated that there would be system performance issues caused by the Project.

The System Protection and Substation Engineering evaluations did not identify any overstressed breakers.

The power flow studies indicated that the Project caused several 60 kV bus voltage drops of 5% or more from the pre-project levels, and caused PG&E's system to fail to meet the applicable voltage criteria.

Mitigation alternatives are provided in Section 11.

2. Project and Interconnection Information

The Project consists of ten reciprocating engine generators, each rated 16.638 MW. With 3.65 MW auxiliary loads, the maximum net output to the grid is 162.73 MW. Four generators are connected to the 115 kV transmission system at HBPP, and two three-generator groups are connected to the 60 kV bus at HBPP Substation.

A conceptual one-line diagram of the Project is shown in Figure 2-1.

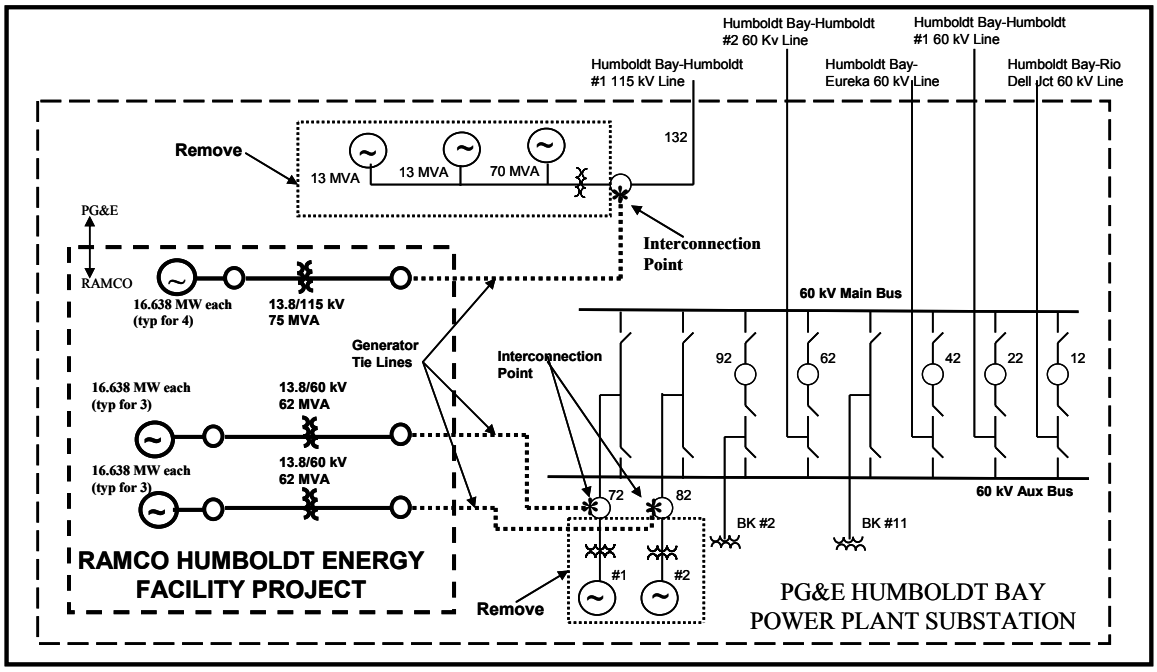

Figure 2-1: Conceptual One-Line

Figure 2-2 shows the approximate location of the Project and the transmission facilities in the area.

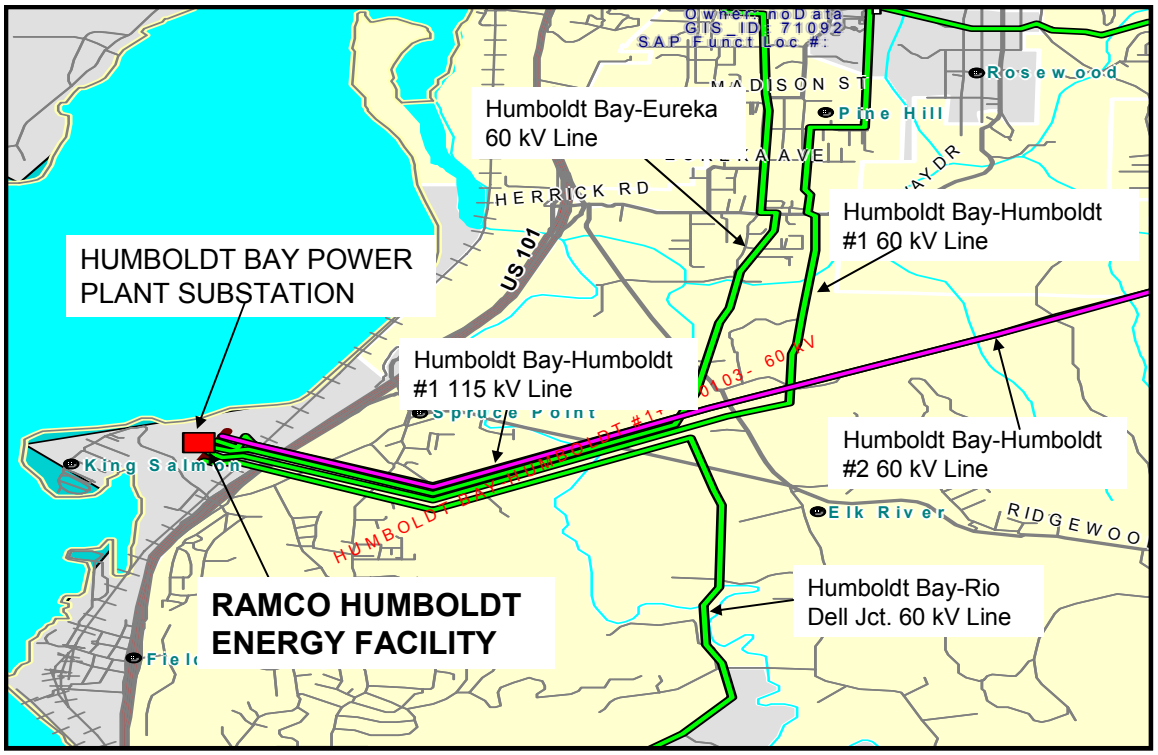

Figure 2-2: Location Map

3. Study Assumptions

PG&E conducted the SIS using the following assumptions:

1) The Project consists of ten reciprocating engine generators, each rated for 16.638 MW. The maximum output to the grid from the facilities is 162.73 MW with ancillary load of 3.65 MW. Four generators are connected to the 115 kV line at HBPP, and two three-generator groups are connected to the 60 kV bus at HBPP Substation.

2) The expected commercial operation date is August 2008.

3) The Project employs three step-up transformers. Two step-up transformers are three phase, 13.8/60 kV delta/wye grounded transformers rated for 36/48/62 MVA @ 55 degree C rise, or 40/55/67 MVA @ 65 degree C rise with impedance of 8% @ 36 MVA base. The third step-up transformer is a three phase, 13.8/115 kV delta/wye grounded transformer rated for 45/60/75 MVA @ 55 degree C rise, or 50/67/84 MVA @ 65 degree C rise with an impedance of 8.5% @ 45 MVA base.

4) Ramco will engineer, procure, construct, own, and maintain its project facility including the generator tie lines.

5) Two 60 kV generator tie lines are less than 500 ft with 715.5 Al conductor or equivalent. One 115 kV generator tie line is less than 700 ft with 715.5 Al conductor or equivalent.

6) The study took into account the planned generating facilities in PG&E's service territory whose schedules are concurrent with or precede the Project's schedule.

4. Power Flow Study Base Cases

Three power flow base cases were used to evaluate the transmission system impacts of the Project. While it is impossible to study all combinations of system load and generation levels during all seasons and at all times of the day, these three base cases represent extreme loading and generation conditions for the study area.

PG&E cannot guarantee that the Project can operate at maximum rated output 24 hours a day, year round, without system impacts, nor can PG&E guarantee that the Project will not have system impacts during the times and seasons not studied in the SIS.

- **2008 Summer Peak Full Loop Base Case:**

  Power flow analysis was performed using PG&E's 2008 Summer Peak Full Loop Base Case (in General Electric Power Flow format). This base case was developed from PG&E's 2004 base case series and has a 1-in-10 year extreme weather heat wave load level for the Humboldt Area.

- **2008 Winter Peak Full Loop Base Case:**

  Power flow analysis was performed using PG&E's 2008 Winter Peak Full Loop Base Case (in General Electric Power Flow format). The Humboldt area is a winter peaking area. This base case was developed from PG&E's 2004 base case series and has a 1-in-10 year extreme weather load level for the Humboldt Area

- **2008 Summer Off-Peak Full Loop Base Case:**

  Power flow analysis was performed using PG&E's 2008 Summer Off-Peak Full Loop Base Case (in General Electric Power Flow format). This base case was developed from PG&E's 2004 base case series and represents the minimum load level that can be expected in the Humboldt Area.

These three base cases modeled all approved PG&E transmission reliability projects that will be operational by 2008. These three base cases also modeled all proposed generation projects that will be operational by 2008. However, some generation projects that are electrically far from the proposed project were either turned off or modeled with reduced generation to balance the loads and

resources in the power flow model. The major generation projects included are shown in Attachment 1 of Appendix A.

5. Study Criteria Summary

The CAISO Controlled Grid Reliability Criteria, which incorporate the Western Electricity Coordinating Council (WECC) and the North American Electric Reliability Council (NERC) planning criteria, were used to evaluate the impact of the Project on the PG&E transmission system.

5.1 Steady State Study Criteria – Normal Overloads

Normal overloads are those that exceed 100 percent of normal ratings. The CAISO Controlled Grid Reliability Criteria requires the loading of all transmission system facilities be within their normal summer ratings.

5.2 Steady State Study Criteria – Emergency Overloads

Emergency overloads are those that exceed 100 percent of emergency ratings. The emergency overloads refer to overloads that occur during single element contingencies (CAISO Category "B") and multiple element contingencies (CAISO Category "C").

5.3 Dynamic Stability Study Criteria

According to the WECC Disturbance-Performance Table of Allowable Effects on Other Systems[1], after a CAISO Category "B" disturbance, the transmission system performance should meet the following criteria:

- Transient voltage dip should not be below 25% at load buses or 30% at non-load buses at any time.
- The duration of the transient voltage dip greater than 20% should not exceed 20 cycles at load buses.
- The minimum transient frequency should not fall below 59.6 Hz for more than 6 cycles at load buses.

After a CAISO Category "C" disturbance, the transmission system performance should meet the following criteria:

- Transient voltage dip should not be below 30% at any bus at any time.
- The duration of a transient voltage dip greater than 20% should not exceed 40 cycles at load buses.
- The minimum transient frequency should not fall below 59.0 Hz for more than 6 cycles at load buses.

[1] Cited from NERC/WECC Planning Standards, dated April 2003.

6. Steady State Power Flow Study and Results

The SIS studied the impact of the Project on PG&E's transmission system. Three base cases were used to simulate the impact by the Project during normal operating conditions, as well as, single and multiple (CAISO Categories "B" and "C") outages:

- 2008 Summer Peak
- 2008 Winter Peak
- 2008 Summer Off-peak

These base cases are described in Section 4. The SIS covered the transmission facilities within PG&E's Humboldt, North Coast, and North Valley planning areas.

6.1 Contingencies

The CAISO Category "B" and "C" contingencies used in this analysis are provided in Appendix B. The single (CAISO Category "B") and selected multiple (CAISO Category "C") contingencies include the following outages:

6.1.1 CAISO Category "B"

- All single (60 - 230 kV) generator outages within the study area
- All single (60 - 230 kV) transmission circuit outages within the study area
- All single (60 - 230 kV) transformer outages within the study area
- Selected overlapping single generator and transmission circuit outages for the transmission lines and generators within the study area

6.1.2 CAISO Category "C"

- Selected (60-230 kV) bus outages within the study area
- Selected outages caused by selected breaker failures (excluding bus tie and sectionalizing breakers) at the same bus section
- Selected combination of any two-generator/transmission line/transformer outages within the study area, except those included in Category "B"
- Selected outages of (60-230 kV) double circuit tower lines within the study area

6.2 Results

Appendix B provides a list of the contingencies studied. Appendix C shows the steady state power flow analysis results. Appendix D includes selected power flow plots.

6.2.1 Normal Overloads (CAISO Category "A")

The interconnection of the Project causes no normal overloads during 2008 summer peak, summer off peak, and winter peak load conditions.

6.2.2 Emergency Overloads (CAISO Category "B")

The addition of the Project causes one new Category "B" contingency overload during the 2008 summer off peak load condition. The addition of the Project does not exacerbate any pre-project Category "B" emergency overloads for 2008 summer peak and winter peak load conditions. The overloads are listed in Table 6-1. The pre-project overload is shown as shaded.

Over Loaded Component	Contingency	Rating (Amps)	Pre- Project Loading (Amps |%Rating)		Post-Project Loading (Amps |%Rating)		% Change from Pre-Project Loading
2008 Summer Peak							
Humboldt-Eureka 60 kV Line (Humboldt-Harris)	Humboldt Bay Eureka 60 kV Line	346	367	106%	367	106%	0%
	Humboldt Bay Eureka 60 kV Line and HBPP Unit 1	346	372	107%	367	106%	-1%
	Humboldt Bay Eureka 60 kV Line and HBPP Unit 2	346	367	106%	367	106%	0%
2008 Summer Off Peak							
Humboldt – Trinity 115 kV Line	Bridgeville - Cottonwood 115 kV Line	338	171	51%	369	109%	+58%
2008 Winter Peak							
Humboldt-Eureka 60 kV Line (Humboldt-Harris)	Humboldt Bay Eureka 60 kV Line	443	475	107%	476	107%	0%
	Humboldt Bay Eureka 60 kV Line and HBPP Unit 1	443	477	107%	476	107%	0%
	Humboldt Bay Eureka 60 kV Line and HBPP Unit 2	443	476	107%	476	107%	0%

Table 6-1: Category "B" Contingency Emergency Overload

6.2.3 Emergency Overloads (CAISO Category "C")

The interconnection of the Project causes one new Category "C" contingency emergency overload during the 2008 summer off peak load condition. The addition of the Project also exacerbates one pre-project Category "C" emergency overload during 2008 summer peak and four pre-project Category "C" emergency overloads during 2008 winter peak load condition. These overloads are summarized in Table 6-2. The pre-project overload is shown as shaded.

Over Loaded Component	Contingency	Rating (Amps)	Pre- Project Loading (Amps |%Rating)		Post-Project Loading (Amps |%Rating)		% Change from Pre-Project Loading
2008 Summer Peak							
Humboldt Bay – Eureka 60 kV Line	Humboldt 60 kV Bus	352	363	103%	367	104%	+1%
2008 Summer Off Peak							
Humboldt – Trinity 115 kV Line	Bridgeville 115 kV Bus	338	176	52%	384	114%	+62%
2008 Winter Peak							
Bridgeville 115/60 kV Bank 1	Humboldt 115 kV Bus	36 MVA	38MVA	104%	40 MVA	110%	+6%
Humboldt 115/60 kV Bank 1	Humboldt Bay 60 kV Bus	45 MVA	53 MVA	118%	55 MVA	122%	+4%
Humboldt 115/60 kV Bank 2	Humboldt Bay 60 kV Bus	45 MVA	50 MVA	111%	53 MVA	118%	+7%
Humboldt Bay – Eureka 60 kV Line	Humboldt 60 kV Bus	443	475	107%	480	109%	+2%

Table 6-2: Category "C" Contingency Emergency Overloads

7. Dynamic Stability Study and Results

Dynamic stability studies were conducted using the 2008 summer and winter peak full loop base cases to ensure that the transmission system remains in operating equilibrium through abnormal operating conditions, after the new facility begins operation. The generator models are shown in Appendix E.

7.1 Dynamic Stability Study Scenarios

Disturbance simulations were performed for a study period of up to 20 seconds, to determine whether the new facility will create any system instability during the following line and generator outages.

7.1.1 NERC/CAISO Category "B" Contingencies:

1) Full load rejection of 162.73 MW generation of the Project

2) A three phase fault with normal clearing time at the Humboldt Bay Power Plant Substation 60 kV bus, followed by loss of the Humboldt Bay-Rio Dell Junction 60 kV line

3) A three-phase fault at the Humboldt Bay Power Plant Substation 60 kV bus followed by loss of the Humboldt Bay-Humboldt # 1 60 kV line.

4) A three-phase fault at the Humboldt Bay Power Plant Substation 60 kV bus, followed by loss of the Humboldt Bay-Eureka 60 kV line.

5) A three-phase fault at the Humboldt Substation 115 kV bus followed by loss of the Humboldt Bay-Humboldt #1 115 kV line.

7.1.2 NERC/CAISO Category "C" Contingencies:

1) A three-phase fault on the Humboldt Bay Power Plant Substation 60 kV bus.

2) A three-phase fault on the Humboldt Substation 115 kV bus.

7.2 Parameters Monitored to Evaluate System Stability Performance

7.2.1 Rotor Angle

The rotor angle plots shown in Appendix F provide a measure for determining how the proposed generation units would swing with respect to one another. The plots also provide a measure of how the units would swing with respect to other generation units in the area.

7.2.2 Bus Voltage

The bus voltage plots, in conjunction with the relative rotor angle plots, also shown in Appendix F, provide a means of detecting out-of-step conditions. The bus voltage plots are useful in assessing the magnitude and duration of post disturbance voltage dips and peak-to-peak voltage oscillations. The bus voltage plots also give an indication of system damping and the level to which voltages are expected to recover in steady state conditions.

7.2.3 Bus Frequency

The bus frequency plots, also shown in Appendix F, provide information on the magnitude and the duration of post fault frequency swings with the Project in service. These plots indicate the extent of possible over-frequency or under-frequency, which can occur because of the imbalance between the generation and load within an area.

7.2.4 Other Parameters

- Generator Terminal Power
- Generator Terminal Voltage
- Generator Rotor Speed
- Generator Field Voltage
- Bus Angle
- Line Flow
- Voltage Spread
- Frequency Spread

7.3 Results

The study concluded that the Project would cause the transmission system unstable at the following contingencies:

- Humboldt 115 kV bus outage
- Humboldt-Rio Dell 60 kV line outage

In addition, the dynamic stability studies indicated that the frequency at several 60 kV buses fall below 59.6 Hertz for longer than six cycles under Contingencies 3 and 4 shown in Section 7.1.1, which violated the CAISO Controlled Grid Reliability Criteria. Table 7-1 lists these frequency violations. The Project is required to install a special protection generation dropping scheme to trip the Project after the contingencies in order to mitigate the frequency violation.

Bus Name	Minimum Frequency		% Frequency Drop		Duration (cycles)
	Summer	Winter	Summer	Winter	
Humboldt Bay-Humboldt # 1 60 kV Line Outage					
Humboldt Bay 60 kV	59.4354	59.4203	0.94%	0.58%	> 6
Eureka 60 kV	59.4938	59.4867	0.84%	0.51%	> 6
Eel River 60 kV	59.5113	59.5039	0.81%	0.50%	> 6
Harris 60 kV	59.5309	59.5245	0.78%	0.79%	> 6
Newburg 60 kV	59.5416	59.5346	0.76%	0.78%	> 6
Orick 60 kV	59.5468	59.5401	0.76%	0.77%	> 6
Big Lagoon 60 kV	59.5464	59.5398	0.76%	0.77%	> 6
Trinidad 60 kV	59.5462	59.5396	0.76%	0.77%	> 6
Simpson 60 kV	59.5454	59.5390	0.76%	0.77%	> 6
Blue Lake 60 kV	59.5454	59.5389	0.76%	0.77%	> 6
BCHIPMIL 60 kV	59.5452	59.5388	0.76%	0.77%	> 6

Bus Name	Minimum Frequency		% Frequency Drop		Duration (cycles)
	Summer	Winter	Summer	Winter	
JANS CRK 60 kV	No	59.5558	N/A	0.74%	>6
LP_FLKBD	No	59.5558	N/A	0.74%	>6
Humboldt Bay-Eureka 60 kV Line Outage					
Humboldt Bay 60 kV	59.4552	59.4419	0.91%	0.93%	> 6
Eureka 60 kV	59.5378	59.5205	0.77%	0.78%	> 6
Orick 60 kV	59.5414	59.5353	0.76%	0.77%	> 6
Big Lagoon 60 kV	59.5411	59.5350	0.76%	0.77%	> 6
Trinidad 60 kV	59.5408	59.5348	0.77%	0.78%	> 6
Simpson 60 kV	59.5402	59.5342	0.77%	0.78%	> 6
Blue Lake 60 kV	59.5401	59.5342	0.77%	0.78%	> 6
BCHIPMIL 60 kV	59.5399	59.5340	0.77%	0.78%	> 6
Harris 60 kV	59.5382	59.5323	0.77%	0.78%	> 6
Eel River 60 kV	59.5266	59.5205	0.79%	0.80%	> 6
Newburg 60 kV	59.5547	59.5490	0.74%	0.75%	> 6
LP_FLKBD	59.5580	59.5510	0.74%	0.75%	> 6
JANS CRK	59.5580	59.5510	0.74%	0.75%	> 6
Arcata 60 kV	No	59.5563	N/A	0.74%	> 6

Table 7-1: Dynamic Stability Results: Frequency Violations

The results of the study are provided in the form of plots in Appendix F.

8. System Protection Study

Short circuit studies were performed to determine the impact by the interconnection of the Project to the transmission system. The fault duties were calculated before and after the interconnection of the Project.

8.1 System Protection Study Input Data

Reciprocating Engine Generator (Typical for ten)

- Sub-transient reactance (X''_d) = 0.187pu @ 17.02 MVA
- Negative Sequence reactance (X_2) = 0.198 pu @ 17.02 MVA
- Zero Sequence reactance (X_0) = 0.099 pu @ 17.02 MVA

Step-up Transformers

- 13.8/115 kV, 45/60/75 MVA at 55° C or 50/67/84 at 65° C, Z = 8.5% @ 45 MVA base
- 13.8/60 kV, 36/48/62 MVA at 55° C or 40/55/67 at 65° C, Z = 8% @ 36 MVA base (Typical for two)

8.2 Results

Table 8-1 lists the available short circuit duty at the buses electrically adjacent to the Project. This data was used to determine if any equipment would be overstressed by the addition of the Project. Based on 9,556 amps of 60 kV breaker rating, the 60 kV breakers at HBPP and Humboldt Substation are potentially overstressed. The breaker evaluation is provided in Section 9.1.

Bus Name	kV	Pre-project		Post-project			
		3LG (A)	1LG (A)	3LG (A)	% Change	1LG (A)	% Change
BRIDGEVILLE	115 kV	2,791	2,862	2,942	5%	2,968	4%
EEL RIVER	60 kV	3,378	2,913	3,309	-2%	2,872	-1%
EUREKA E	60 kV	6,156	5,899	5,965	-3%	5,754	-3%
HUMBOLDT B	115 kV	2,863	3,059	3,747	31%	4,286	40%
HUMBOLDT BAY	60 kV	8,973	10,448	8,006	-11%	9,282	-11%
HUMBOLDT S	60 kV	8.345	9,635	8,484	-2%	9,763	1%
HUMBOLDT S	115 kV	3,668	4,169	4,369	19%	4,997	20%
NEWBERG	60 kV	3,874	3,524	3,814	-2%	3,484	-1%
RIO DELL	60 kV	3,118	3,136	3,106	-0%	3,125	-0%
RIO DELL JCT	60 kV	3,842	3,514	3,816	-1%	3,495	-1%
TRINITY	115 kV	2,686	2,508	2,728	2%	2,532	1%

Table 8-1: Short Circuit Study Results

Substation breaker ratings are as follows:

Bridgeville 115 kV: 40,000 AIC

Eel River 60 kV: Fuses installed

Eureka 60 kV: 9,556 AIC

Humboldt Bay 115 kV: 40,000 AIC

Humboldt Bay 60 kV: 9,556 AIC

Humboldt Substation 115 kV: 22,969 AIC

Humboldt Substation 60 kV: 31,500 AIC

Newberg 60 kV: Fuses installed

Rio Dell 60 kV: Fuses installed

Rio Dell JCT 60 kV: 23,000 AIC

Trinity 115 kV: 40,000 AIC

8.3 Preliminary Protection Requirements

PG&E protection requirements are designed and intended to protect PG&E's system only. Additional protection is typically needed to protect the Project. It is Ramco s responsibility to protect its own system and equipment and comply with PG&E Interconnection Handbook. This document can be found in the PG&E's web page at:

http://www.pge.com/biz/transmission_services/contracts_tariffs/interconnection_handbook_toc.html

The preliminary protection requirement will consist of a non-pilot scheme on the Humboldt Bay-Humboldt 115 kV Line and rewiring of the existing bus differential protection for the Humboldt Bay PP 60 kV breaker CB 72 and 82. The specific details are:

8.3.1 Humboldt Bay PP Substation

- Install two new 60 kV and one new 115 kV circuit breakers.
- Rewire the existing bus, differential protection for the 60 kV bus.

8.3.2 The Humboldt Bay-Humboldt 115 kV Line

- Install a non-pilot scheme that includes directional relay.

8.3.3 Humboldt Energy Facility

- Install two 60 kV circuit breakers with bushing CT's rated 1200/5 amps for each 13.8/60 kV transformer. Wire transformer side CT's to existing 60 kV bus differential relay.
- Install one 115 kV circuit breaker with bushing CT's rated 3000/5 amps for 13.8/115 kV transformer. Install protection relays.

Appendix G provides further details of the preliminary protection requirements.

Note: Per PG&E Purchase and Sale Agreement Technical Specification, the existing equipment at Humboldt Bay Power Plant may not be reused. Ramco may be required to supply two new 60 kV breakers and one new 115 kV breaker for the interconnection at Humboldt Bay Power Plant. The Facilities Study will provide more detail.

9. Substation Evaluation

9.1 Overstressed Breakers

Using the System Protection results in Section 8.2, the substation evaluation did not identify any overstressed breaker.

9.2 Bus Loading Evaluation

Bus loading analysis was performed on the 60 kV bus at HBPP to identify any overloads that would occur with the addition of the Project. Power flow evaluation has indicated that the worst bus loading was less than 1,400 amps. The 60 kV bus at HBPP is made up of two-inch copper tubing, which has a rating of 1,945 amps (normal) and 2,380 amps (emergency). Therefore, the 60 kV bus conductors at HBPP will adequately accommodate the addition of the Project.

10. Reactive Power Deficiency Analysis

The power flow studies of Category "A", "B", and "C" contingencies under 2008 summer peak, summer off-peak, and winter peak loading conditions indicate that the addition of the Project will cause voltage drops of 5% or more on certain load buses, or cause the PG&E system to fail to meet applicable voltage criteria.

10.1 Description

The CAISO Category '"A", Category "B" and "C" contingencies used in this analysis are provided in Appendix B. :

10.2 Results

Appendix C shows the steady state power flow analysis results. Appendix D includes selected power flow plots.

10.2.1 Normal Voltage Violations (CAISO Category A)

The addition of the Humboldt Energy Facility causes four low voltage violations during the 2008 summer peak load condition and one low voltage violation during the 2008 winter peak load condition. The voltages are shown in Table 10-1. The pre-project overload is shown as shaded.

Substation Bus	Pre-Project Voltage (p.u.)	Post-Project Voltage (p.u.)	P.U. Change from Pre-Project
2008 Summer Peak Load Condition			
Covelo 60 kV	0.958	0.946	-0.012
Garberville 60 kV	0.957	0.944	-0.013
Kekawaka 60 kV	0.959	0.944	-0.015
Middletown 60 kV	0.937	0.936	-0.001
2008 Winter Peak Load Condition			
Hoopa 60 kV	0.944	0.939	-0.005

Table 10-1: Voltage Violations

The post-project voltages are marginally below the 0.95 pu voltage requirement (or by less 0.2 %) in all these scenarios. Because these

substations are far away from the Project and the low voltages are known issues in the Humboldt area, the Project is not required to mitigate these conditions. However, generation reduction of 16 MW (one unit at 115 kV) may mitigate low voltage violations.

10.2.2 Emergency Voltage Violations (CAISO Category "B" and "C")

The addition of the Humboldt Energy Facility does not cause any Category "B" or "C" emergency voltage violations for 2008 summer peak, summer-off peak, or winter peak loading conditions.

11. Mitigation

This section presents alternatives available for mitigating the Category "B" and "C" emergency overloads and low voltages of the facilities described in Section 6.

Mitigation alternatives have been developed for the Category "B" emergency overloads. For CAISO Category "C" outages (according to WECC reliability criteria), the overloads may be mitigated by load shedding or generation dropping. PG&E or CAISO or both may require new generators to take part in and be responsible for the costs of operating procedures and/or Special Protection Schemes (SPS) that will eventually be planned to mitigate these rare occurrences. Detailed mitigation alternatives are given below:

11.1 Summary of Worst Overloads

The worst Category "B" and "C" emergency overloads in Section 6 are listed in Table 11-1. Pre-project overloads are shown as shaded.

Over Loaded Component	Contingency	Rating (Amps)	Pre- Project Loading (Amps |%Rating)		Post-Project Loading (Amps |%Rating)		% Change from Pre-Project Loading	Mitigation
2008 Summer Peak Category "B"								
Humboldt-Eureka 60 kV Line (Humboldt-Harris)	Humboldt Bay Eureka 60 kV Line	346	367	106%	367	106%	0%	11.2.1
2008 Summer Off Peak Category "B"								
Humboldt – Trinity 115 kV Line	Bridgeville - Cottonwood 115 kV Line	338	171	51%	369	109%	+58%	11.2.2
2008 Summer Off Peak Category "C"								
Humboldt – Trinity 115 kV Line	Bridgeville 115 kV Bus	338	176	52%	384	114%	+62%	11.3.1
2008 Winter Peak Category "C"								
Humboldt Bay – Eureka 60 kV Line	Humboldt 60 kV Bus	443	475	107%	480	109%	+2%	11.4.1
Humboldt 115/60 kV Bank 1	Humboldt Bay 60 kV Bus	45 MVA	53 MVA	118%	55 MVA	122%	+4%	11.4.2

Over Loaded Component	Contingency	Rating (Amps)	Pre- Project Loading (Amps |%Rating)		Post-Project Loading (Amps |%Rating)		% Change from Pre-Project Loading	Mitigation
Humboldt 115/60 kV Bank 2	Humboldt Bay 60 kV Bus	45 MVA	50 MVA	111%	53 MVA	118%	+7%	11.4.2
Bridgeville 115/60 kV Bank 1	Humboldt 115 kV Bus	36 MVA	38MVA	104%	40 MVA	110%	+6%	11.4.3

Table 11-1: Worst Category "B" and "C" Emergency Overloads

11.2 Category "B" Overload Mitigation

11.2.1 Humboldt-Eureka 60 kV Line Section between Humboldt and Harris

PG&E has a re-conductor project for this line, and the EDRO date is forecast for 2008.

11.2.2 Humboldt-Trinity 115 kV Line

Limiting Factor		4/0 ACSR at 2 fps wind speed rating 338 Amps Emergency (49 miles)	
Pre-Project Emergency Loading	171 Amps (51%)	Post Project Emergency Loading	369 Amps (109%)
Worst Contingency		Bridgeville-Cottonwood 115 kV line	
Worst Overload Condition		2008 Summer Off Peak	

Solution: Reduce number of generators on the 115 kV system from 4 to 3 (total generation reduction of16.63 MW). This proposed mitigation would reduce the Humboldt-Trinity 115 kV line loading to less than 100%.

Alternative Solution: Reconductor approximately 49 miles of the Humboldt-Trinity 115 kV line between Humboldt Substation and Pole P65/1 section from 4/0 ACSR to 397.5 ACSR or equivalent. Completion of this proposed mitigation would increase the line section capability to 563 Amps emergency rating at two feet-per-second wind speed.

11.3 New Category "C" Overload Mitigation

11.3.1 Humboldt-Trinity 115 kV Line

See 11.2.1 mitigation.

11.4 Pre-Project Overload Mitigation

Pre-project overloads are mitigated by either the existing operation solutions or existing PG&E projects. The Project is not responsible mitigating these pre-project overloads.

11.4.1 Humboldt Bay-Eureka 60 kV Line

Limiting Factor		2/0 CU at 2 fps wind speed rating Winter Normal / 443 Amps Winter Emergency	
Pre-Project Emergency Loading	475 Amps (107%)	Post Project Emergency Loading	480 Amps (109%)
Worst Contingency		Humboldt 60 kV Bus	
Worst Overload Condition		2008 Winter Peak	

Solution: Drop loads are the operation solution to mitigate this overload and/or by inserting the MEPPs units and turning on the synchronous condenser at HBPP.

11.4.2 Humboldt 115/60 kV Bank #1 and #2

Limiting Factor		115/60 kV Transformer, 38 MVA normal Rating and 45 MVA for 4 hour emergency rating	
Pre-Project Emergency Loading	BK # 1 53 MVA (118%) BK # 2 50 MVA (111%)	Post Project Emergency Loading	BK # 1 55 MVA (122%) BK # 2 53 MVA (118%)
Worst Contingency		Humboldt Bay Power Plant Substation 60 kV Bus	
Worst Overload Condition		2008 Winter Peak	

Solution: PG&E Operation Plan (Non-T138 Related) stated at an outage of the Humboldt Bay Power Plant Substation 60 kV Bus, trip Essex CB 52, Humboldt CB 12, and/or Humboldt CB 32 for dropping loads. If necessary, use MEPPs. These measurements will mitigate the overload on these banks.

11.4.3 Bridgeville 115/60 kV Bank #1

Limiting Factor		36 MVA Emergency Rating	
Pre-Project Emergency Loading	38 MVA (104%)	Post Project Emergency Loading	40 MVA (110%)
Worst Contingency		Humboldt 115 kV Bus	
Worst Overload Condition		2008 Winter Peak	

Solution: Drop loads are the operation solution to mitigate this overload and/or by inserting the MEPPs units and turning on the synchronous condenser at HBPP.

12. Environmental Evaluation / Permitting

Pacific Gas and Electric Company (PG&E) is subject to the jurisdiction of the California Public Utilities Commission (CPUC); and must comply with CPUC General Order 131-D (Order) on the construction, modification, alteration, or addition of all electric transmission facilities (i.e., lines, substations, switchyards, etc.). This includes facilities to be constructed by others and deeded to PG&E. In

cases where PG&E's electric facilities are part of a larger project (i.e., electric generation plant), the Order exempts PG&E from obtaining an approval from the CPUC provided it's planned facilities have been included in the larger project's California Environmental Quality Act (CEQA) review and the project's lead agency (i.e., California Energy Commission) finds no significant unavoidable environmental impacts. PG&E or the project developer may proceed with construction once PG&E has filed notice with the CPUC and the public on the project exempt status and the public have had a chance to protest PG&E's claim of exemption. The absence of evaluating PG&E facilities could require PG&E to seek approval from the CPUC (i.e., Certificate of Public Convenience and Necessity or Permit to Construct) taking as much as 18 months since the CPUC would need to conduct it's own environmental evaluation (i.e., Negative Declaration or Environmental Impact Report).

PG&E recommends that the project proponent include PG&E facility work in its project description and application to the lead agency performing CEQA review on the project. The lead agency must consider the environmental impacts of the interconnection electric facility, whether built by the developer with the intent to transfer ownership to PG&E or to be built and owned by PG&E directly, and make a finding of no significant unavoidable environmental impacts. Once the project has completed the review process and the environmental document (i.e., Negative Declaration or Environmental Impact Report) finds no significant unavoidable environmental impacts on PG&E's work, PG&E would file an Advice Letter with the CPUC and publish public notice on proposed construction of the facilities. Facilities built under this procedure must also be designed to include consideration of electric and magnetic field (EMF) mitigation measures pursuant to PG&E "EMF Design Guidelines of New Electrical Facilities: Transmission, Substation and Distribution".

Please see Section III, B.1. (f) In General Order 131-D. This document can be found in the CPUC's web page at:

http://www.cpuc.ca.gov/PUBLISHED/GENERAL_ORDER/589.htm

13. Study Updates

This SIS was performed according to the assumptions shown in the Sections titled "Study Assumptions" and "Power Flow Study Base Case". In the event such that these assumptions are changed, an updating study may be required to re-evaluate the Project's impact on PG&E's transmission grid. Ramco would be responsible for paying for any such updating study. Examples of changes that might prompt such a study are:

- Change in interconnection date
- Change in Interconnection Queue position
- Change in project's MW size
- Change in interconnection point

14. Stand-By Power

This study does not address any requirements for standby power that the project may require. Ramco should contact their Generation Interconnection Services representative regarding this service.

Note: Ramco is urged to contact their Generation Interconnection Services representative promptly regarding stand-by service in order to ensure its availability for the Project's startup date.

Appendix A

Study Plan

System Impact Study

Study Plan

Ramco Generating Two

Humboldt Energy Facility Project

REVISION 4

Pacific Gas and Electric Company

WE DELIVER ENERGY.

October 20, 2005

Table of Contents

1. Introduction 1

2. Study Fee 1

3. Schedule 2

4. Cost Estimates 2

5. Project and Interconnection Information 2

6. Study Assumptions 4

7. Power Flow Study Base Case 4

8. Study Scope 5

- **8.1** Steady State Power Flow Analysis 5
- **8.2** System Protection Analysis 6
- **8.3** Dynamic Stability Analysis 6
- **8.4** Reactive Power Deficiency Analysis 7
- **8.5** Transmission Line Evaluation 7
- **8.6** Substation Evaluation 7
- **8.7** Interconnection Feasibility Evaluation 8
- **8.8** Land Evaluation 8

9. Environmental Evaluation/ Permitting 8

10. Study Updates 9

11. Stand-by Power 9

Attachment 1 – Generation Projects

1. Introduction

Ramco Generating Two (Ramco) has revised its Interconnection Application (IA) previously submitted to the California Independent System Operator Corporation (CAISO) for the Humboldt Energy Facility Project (Project). The Project will consist of ten (10) reciprocating engine generators, each rated 16.638 MW. The maximum net output to the grid will be 162.73 MW. Four (4) generators are connected to the 115 kV line at PG&E Humboldt Bay Power Plant Substation (Humboldt PP) near Eureka, California. Two three (3) generator groups are connected to the 60 kV bus at Humboldt PP. Table 1-1 lists the specific changes from the original IA.

	Original IA	New IA
Total Generation rated output	149.7 MW	166.38 MW
Number of Generator	9	10
Generator Auxiliary load	3.3 MW	3.65 MW
Net Output to the Grid	146.4 MW	162.73 MW
Interconnection Configuration	146.4 MW to 60 kV bus at Humboldt Bay Power Plant	62.9 MW to 115 kV line and 99.83 MW to 60 kV bus at Humboldt Bay Power Plant
Generator Tie Lines	Two 60 kV, < 500' each	One 115 kV, <700' and two 60 kV, <500' each
Step-up Transformers	Two 13.8/60 kV 125 MVA transformers	One 13.8/115 kV 75 MVA and two 13.8/60 kV 62 MVA transformers

Table 1-1 Interconnection Application Changes

Per CAISO Amendment 39 Process, CAISO and PG&E have agreed that a System Impact Study (SIS) is required to determine the impact of the Project on PG&E's transmission grid. Revision 3 of this study plan will form the basis for the System Impact Study Agreement (SISA) by defining the scope, content, assumptions, and terms of reference of the SIS. The SIS will:

- Identify transmission system impacts caused solely by the additional of the proposed project, and
- Identify the system reinforcement, if any, necessary to mitigate the adverse impact of the proposed project under various system conditions.

The commercial operational date of the Project is August 2008. PG&E cannot guarantee that such interconnection can be completed by August 2008 due to the potential work required for this interconnection. However, PG&E will work with Ramco to achieve that interconnection as quickly as possible.

2. Study Fee

PG&E has estimated a study fee of $25,000 for performing the SIS. The final cost to complete the SIS will be based on actual cost. PG&E will provide Ramco a record of actual costs for performing this SIS roughly two months after the study

is completed. PG&E will bill Ramco the remaining balance if the actual cost is higher than the estimated $25,000. If the actual cost is less than the estimated study fee, PG&E will refund the balance to Ramco.

3. Schedule

Table 3-1 shows the milestones/schedules associated with the study.

Task	Milestone Description	Target Date
1	Establish study commencement date based on receipt of study fee with the SISA	October 31,2005
2	Issue SIS final report	December 30,2005

Table 3-1: Study Schedule

Per the CAISO Tariff, Ramco must execute and return the attached SISA and the estimated study fee of $25,000 by the tenth business day from the tendering of this study plan. If Ramco fails to return an executed SISA with the estimated study fee by the tenth business day, the Project will be removed from the Interconnection queue.

4. Cost Estimates

No cost estimates will be provided in this SIS. Cost estimates will be provided when the project progresses to the Facilities Study (FS).

5. Project and Interconnection Information

Table 5-1 provides general information about the Project.

Project Location	PG&E's Humboldt Bay Power Plant, Eureka, CA
PG&E Planning Area	Redwood Region
Number and Type of Generators	10 Reciprocating Engine Generators (ABB)
Maximum Generator Output	16.638 MW rated each and 166.38 MW total
Generator Auxiliary Load	3.65 MW total
Maximum Net Output to Grid	162.73 MW
Power Factor	0.8
Step-up Transformer	One three-phase 13.8/115 kV transformer rated for 75 MVA and two 13.8/60 kV transformers rated for 62 MVA
Description Of Interconnection Configuration	Interconnecting to the Humboldt Bay-Humboldt #1 115 kV line and to the 60 kV bus at Humboldt Bay PP
Connection Voltage	60kV and 115 kV

Table 5-1: The Ramco Humboldt Project General Information

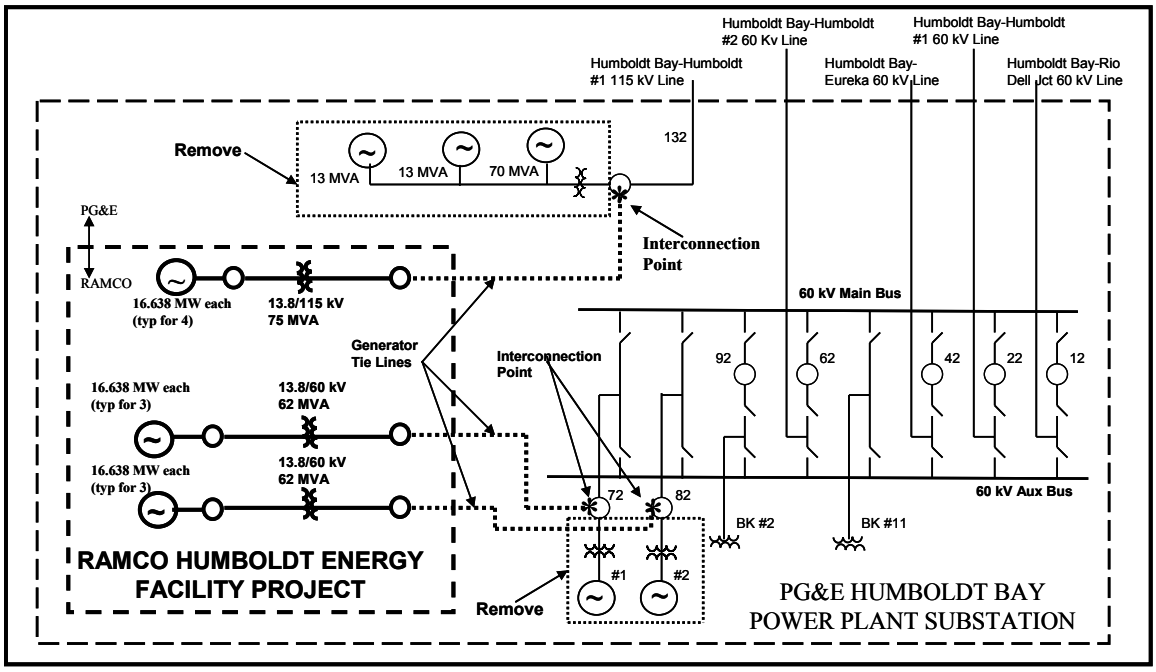

Figure 5-1: Conceptual one-line Diagram

Figure 5-2 shows the approximate location of the Project site in relation to the Humboldt Bay PP and the transmission lines in the area.

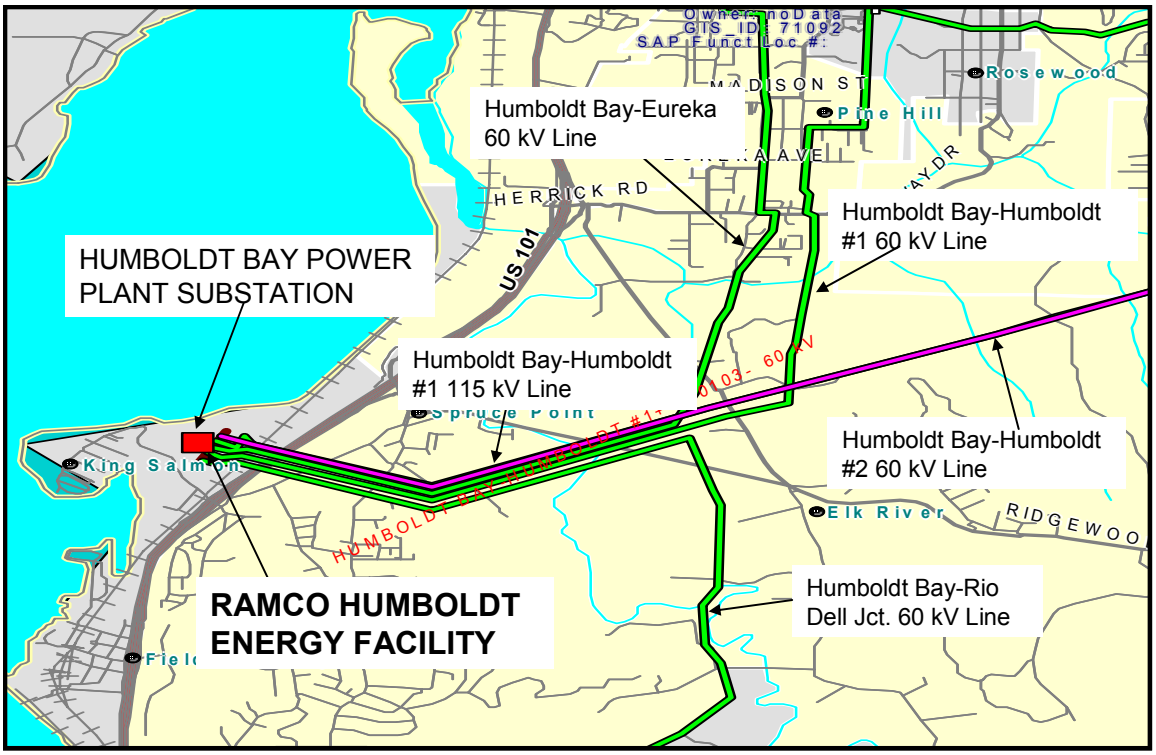

Figure 5-2: Location Map

6. Study Assumptions

PG&E will conduct the SIS using the following assumptions:

1) The Project consists of 10 reciprocating engine generators. The maximum output to the grid from the facilities is 162.73 MW. The ancillary load is 3.65 MW. Four (4) generators are connected to the 115 kV line at PG&E Humboldt Bay Power Plant Substation (Humboldt PP) near Eureka, California. Two three (3) generator groups are connected to the 60 kV bus at Humboldt PP

2) The expected commercial operation date is August 2008.

3) The two new step-up transformers are three phase, 13.8/60 kV delta/wye grounded transformers. The transformer is rated for 36/48/62 MVA @ 55 degree C rise or 40/55/67 MVA @ 65 degree C rise. The impedance is 9% @ 75 MVA base. In addition, there is a three phase, 13.8/115 kV delta/wye grounded transformer with a rating of 45/60/75 MVA @ 55 degree C rise or 50/67/84 MVA @ 65 degree C rise. The impedance is 9% @ 75 MVA base

4) Ramco will engineer, procure, construct, own, and maintain its project facility including generator tie lines.

5) The two 60 kV generator tie lines are less than 500 ft with 715.5 Al conductor or equivalent. The 115 kV generator tie line is less than 700 ft with 715.5 Al conductor or equivalent.

6) The study will take into account the planned generating facilities in PG&E's service territory whose schedules are concurrent with or precede the Project's schedule.

7. Power Flow Study Base Case

Three power flow base cases will be used to evaluate the transmission system impacts of the Project. While it is impossible to study all combinations of system load and generation levels during all seasons and at all times of the day, these three base cases represent extreme loading and generation conditions for the study area.

PG&E cannot guarantee that the Project can operate at maximum rated output 24 hours a day, year round, without system impacts, nor can PG&E guarantee that the Project will not have system impacts during the times and seasons not studied in the SIS.

- **2008 Summer Peak Full Loop Base Case:**

  Power flow analysis will be performed using PG&E's 2008 Summer Peak Full Loop Base Case (in General Electric Power Flow format). This base case will

be developed from PG&E's 2004 base case series and has a 1-in-10 year extreme weather heat wave load level for the Humboldt Area.

- **2008 Winter Peak Full Loop Base Case:**

  Power flow analysis will be performed using PG&E's 2004 Winter Peak Full Loop Base Case (in General Electric Power Flow format). The Humboldt area is a winter peaking area. This base case will be developed from PG&E's 2004 base case series and has a 1-in-10 year extreme weather load level for the Humboldt Area

- **2008 Summer Off-Peak Full Loop Base Case:**

  Power flow analysis will be performed using PG&E's 2004 Summer Off-Peak Full Loop Base Case (in General Electric Power Flow format). This base case will be developed from PG&E's 2004 base case series and represents the minimum load level that can be expected in the Humboldt Area.

These three base cases will model all approved PG&E transmission reliability projects that will be operational by 2008. These three base cases will also model all proposed generation projects that will be operational by 2008. However, some generation projects that are electrically far from the proposed project will be either turned off or modeled with reduced generation to balance the loads and resources in the power flow model. The major generation projects included are shown in Attachment 1.

8. Study Scope

The SIS will determine the impact of the project on PG&E's transmission system. SIS will be conducted using two scenarios. The first scenario will assume that PG&E's Humboldt Bay Power Plant (HBPP) is shut down when the Project is on-line. The second scenario will study the impacts when both the Project and HBPP are on line. This second scenario is likely during at least the initial start-up of the Project.

The specific studies conducted for each scenario are outlined below:

8.1 Steady State Power Flow Analysis

Power Flow analysis will be performed using the three base cases described in Section 7. These base cases will be used to simulate the impact of the project during normal operating conditions and with all single (CAISO Categories "B") and selected multiple (CAISO Category "C") contingencies include the following outages in the PG&E's Humboldt planning areas.

8.1.1 CAISO Category "B"

- All single generator outages within the study area

- All single (60 - 230 kV) transmission circuit outages within the study area
- All single transformer outages within the study area
- Selected overlapping single generator and transmission circuit outages for the transmission lines and generators within the study area

8.1.2 CAISO Category "C"

- Selected bus outages (60 - 230 kV) within the study area
- Selected outages caused by breaker failures (excluding bus tie and sectionalizing breakers) at the same above bus section
- Selected combination of any two-generator/transmission line/transformer outages (except ones included above in Category "B") within the study area
- Selected outages of double circuit tower lines (60 - 230 kV) within the study area

8.2 System Protection Analysis

Short circuit studies will be performed to determine the impact of increased fault duty resulting from the added generation. The study will determine the maximum fault currents in the vicinity of the Project and it will identify equipment that becomes overstressed because of the added generation.

8.3 Dynamic Stability Analysis

Dynamic stability studies will be conducted using the 2008 Summer Peak and 2008 Winter Peak Full Loop base cases to ensure that the transmission system remains in operating equilibrium through abnormal operating conditions after the Project begins operation.

Disturbance simulations will be performed for a study period up to 20 seconds to determine whether the project will create any system instability during the following line and generator outage:

8.3.1 NERC/CAISO Category "B" Contingencies:

1) Full load rejection of 162.73 MW at the Project

2) A three phase fault with normal clearing time at Humboldt Bay PP 60 kV bus, followed by loss of the Humboldt Bay-Rio Dell Junction 60 kV line

3) A three-phase fault at the Humboldt Bay PP 60 kV bus followed by loss of the Humboldt Bay-Humboldt # 1 60 kV line

4) A three-phase fault at the Humboldt Bay PP 60 kV bus, followed by loss of the Humboldt Bay-Eureka 60 kV line

5) A three-phase fault at the Humboldt Substation 115 kV bus, followed by loss of the Humboldt Bay-Humboldt #1 115 kV line

8.3.2 NERC/CAISO Category "C" Contingencies:

6) A three-phase fault on the Humboldt Bay PP 60 kV bus

7) A three-phase fault on the Humboldt Substation 115 kV bus

8.4 Reactive Power Deficiency Analysis

With the generation project included in the system model, Category "B" and Category "C" contingencies will be analyzed to identify any reactive power deficiency, such as:

- If the contingencies result in voltage drops of 5% or more from the pre-project levels, or
- If they fail to meet the applicable voltage criteria

A post-transient power flow analysis will be performed, if deemed necessary, after considering the network topology or power transfer paths involved when a significant amount of power transfer occurs.

8.5 Transmission Line Evaluation

The transmission line evaluation will identify any existing equipment requiring upgrades so as to mitigate overload or overstress caused by the interconnection of the Project. However, the work scope and costs for these potential system impact upgrades are not included in the transmission line evaluation for the SIS. Cost estimates and work scope for the transmission line evaluation will be provided if the project progresses to the FS.

8.6 Substation Evaluation

The substation evaluation will identify any existing equipment requiring upgrades to mitigate problems caused by overstress or overload by the interconnection of the Project.

The substation evaluation for the SIS will not include the work scope and cost estimates of the new equipment at existing PG&E substations, needed to accommodate the Project.

Cost estimates and work scope for the substation evaluation will be provided if the project progresses to the FS.

8.7 Interconnection Feasibility Evaluation

The following PG&E Transmission Departments will review the feasibility of the proposed interconnection to the Humboldt Bay PP:

- System Protection
- Operations Engineering
- Substation Asset Management

If the interconnection is determined to be infeasible, a new interconnection point must be selected before the study can proceed.

8.8 Land Evaluation

The SIS does not include an evaluation to determine if any new land rights are necessary to upgrade the PG&E facilities impacted by the interconnection of the Project, such as construct new generator tie lines and re-conductoring of existing PG&E transmission lines.

PG&E Corporate Real Estate Department will prepare an evaluation when the Project progresses to the FS.

9. Environmental Evaluation/ Permitting

Pacific Gas and Electric Company (PG&E) is subject to the jurisdiction of the California Public Utilities Commission (CPUC); and must comply with CPUC General Order 131-D (Order) on the construction, modification, alteration, or addition of all electric transmission facilities (i.e., lines, substations, switchyards, etc.). This includes facilities to be constructed by others and deeded to PG&E. In cases where PG&E's electric facilities are part of a larger project (i.e., electric generation plant), the Order exempts PG&E from obtaining an approval from the CPUC provided it's planned facilities have been included in the larger project's California Environmental Quality Act (CEQA) review and the project's lead agency (i.e., California Energy Commission) finds no significant unavoidable environmental impacts. PG&E or the project developer may proceed with construction once PG&E has filed notice with the CPUC and the public on the project exempt status and the public have had a chance to protest PG&E's claim of exemption. The absence of evaluating PG&E facilities could require PG&E to seek approval from the CPUC (i.e., Certificate of Public Convenience and Necessity or Permit to Construct) taking as much as 18 months since the CPUC would need to conduct it's own environmental evaluation (i.e., Negative Declaration or Environmental Impact Report).

PG&E recommends that the project proponent include PG&E facility work in its project description and application to the lead agency performing CEQA review on the project. The lead agency must consider the environmental impacts of the interconnection electric facility, whether built by the developer with the intent to

transfer ownership to PG&E or to be built and owned by PG&E directly, and make a finding of no significant unavoidable environmental impacts. Once the project has completed the review process and the environmental document (i.e., Negative Declaration or Environmental Impact Report) finds no significant unavoidable environmental impacts on PG&E's work, PG&E would file an Advice Letter with the CPUC and publish public notice on proposed construction of the facilities. Facilities built under this procedure must also be designed to include consideration of electric and magnetic field (EMF) mitigation measures pursuant to PG&E "EMF Design Guidelines of New Electrical Facilities: Transmission, Substation and Distribution".

Please see Section III, B.1.(f) in General Order 131-D. This document can be found in the CPUC's web page at:

http://www.cpuc.ca.gov/PUBLISHED/GENERAL_ORDER/589.htm

10. Study Updates

This SIS is performed according the assumptions shown in the Sections titled "Study Assumptions" and "Power Flow Study Base Case". In the event such that these assumptions are changed, an updating study may be required to re-evaluate the Project's impact on PG&E's transmission grid. Ramco would be responsible for paying for any such updating study. Examples of changes that might prompt such a study are:

- Change in Interconnection Queue position
- Modifications to a higher Queue project
- Change in SIS assumptions

11. Stand-by Power

This study does not address any requirements for stand-by power that the project may require. Ramco should contact their Generation Interconnection Services Representative regarding this service.

Note: Ramco is urged to contact their Generation Interconnection Services Representative promptly regarding stand-by service in order to ensure its availability for the project's start-up date.

ATTACHMENT 1 – GENERATION PROJECTS

PG&E Generation Projects						
PG&E Queue Position	Applicant Name	Project Name	Nearest Substation	Capacity (MW)	Latest Expected On-Line Date	Modeled In Study Cases
1	Mirant	Contra Costa Power Plant Unit 8 Power Project	Contra Costa	590	2008	Yes
2	Midway Power, LLC	Tesla Power Project	Tesla	1156	2008	Yes
3	Duke Energy Morro Bay LLC	Morro Bay Modernization Project	Morro Bay	1200	2008	Yes
4	Mirant Potrero LLC	Potrero Power Plant Unit 7	Potrero	640	2008	Yes
5	Federal Power Avenal, LLC	Avenal Energy Project	Gates	620	2009	No
6	Sacramento Municipal Utility District	Solano Wind Project	Russell	92	2006	Yes

Non-PG&E Generation Projects to Be Modeled in Base Case per On-line Year						
	Applicant Name	Project Name	Nearest Substation	Capacity (MW)	Latest Expected On-Line Date	Modeled In Study Cases
SMUD	Sacramento Municipal Utility District	Consumers Power Plant	Rancho Seco (SMUD)	500	2006	Yes
TID	Turlock Irrigation District	Walnut Energy Center	Walnut (TID)	250	2006	Yes
SVP	Silicon Valley Power	Los Esteros Critical Energy Facility	SSS (SVP)	320	2008	Yes

ATTACHMENT 1 – GENERATION PROJECTS

PG&E Generation Projects - ISO Generation Interconnection Queue						
Project ID #	**Applicant Name**	**Project Name**	**Nearest Facility**	**Capacity (MW)**	**Latest Expected On-Line Date**	**Modeled In Study Cases**
P0301	Confidential	Confidential	Birds' Landing Switchyard	150	2006	Yes
P0302	Gaviota Energy / Global Renewable	Lompoc Wind Power Project	Cabrillo	120	2006	Yes
P0401	Confidential	Confidential	Birds' Landing Switchyard	150	2006	Yes
P0402	City and County of San Francisco	San Francisco Electric Reliability Power Project	Potrero	145.1	2007	Yes
P0403	Confidential	Confidential	Collector Station at Geysers #17 & Fulton Line	201	2007	Yes
P0404	City and County of San Francisco	San Francisco Airport Electric Reliability Project	San Francisco Airport	48.7	2007	Yes
P0406	Confidential	Confidential	Panoche	99.9	2006	Yes
P0408	Confidential	Confidential	Tesla-Stockton 115 kV Line	99.9	2006	Yes
P0409	D. Milne Associated, LLC	Ripon Generation	Tesla	96.9	2007	Yes

Pacific Gas and Electric Company

WE DELIVER ENERGY.

System Impact Study Agreement

_____ (Applicant) has reviewed the study plan for the interconnection of Applicant's electric generating plant with PG&E's system at _____[1], State of California and agrees with the proposed plan.

Applicant agrees to pay the proposed study fee.

Dated this _____ day of _____, 2005

APPLICANT:

BY: _____
(Signature)

_____
(Type or Print Name)

MAILING ADDRESS:

_____

_____

_____

_____

[1] Enter city and county location of proposed facility.

Appendix B

Contingency Lists for Outages

Autocon Input Files

APPENDIX B – ISO CATEGORY B AUTOCON INPUT FILE

```
# Ramco HEF SIS-2
# 2008 category b contingency list
# Humboldt division
  #
  #
  # Zone 301 Humboldt division
  # 2007 category b contingency list
  #
  #
  # (1)  B2 LINE OUTAGE (BREAKER-TO-BREAKER)
  #
 1  31000 31005  "1 "    0     # line from  HUMBOLDT 115.00  BRKR to BRKR  HMBLDT B 115.00
 0
  #
  #
  # (2)  B2 LINE OUTAGE (BREAKER-TO-BREAKER)
  #
 1  31000 31015  "1 "    0     # line from  HUMBOLDT 115.00  BRKR to BRKR  BRDGVLLE 115.00
 0
  #
  #
  # (3)  B2 LINE OUTAGE (BREAKER-TO-BREAKER)
  #
 1  31000 31452  "1 "    0     # line from  HUMBOLDT 115.00  BRKR to BRKR  TRINITY  115.00
 0
  #
  #
  # (4)  B2 LINE OUTAGE (BREAKER-TO-BREAKER)
  #
 1  31010 31015  "1 "    0     # line from  LOW GAP1 115.00   (2) to BRKR  BRDGVLLE 115.00
 1  31010 31450  "1 "    0     # line from  LOW GAP1 115.00   (2) to (2)   WILDWOOD 115.00
 1  31450 31464  "1 "    0     # line from  WILDWOOD 115.00   (2) to BRKR  COTWDPGE 115.00
 4  31010     0  "1 "    0     # LOAD-DROP    LOW GAP1 115.00  LOAD==0.64(0.31)
 4  31450     0  "1 "    0     # LOAD-DROP    WILDWOOD 115.00  LOAD==0.35(0.07)
 0
  #
  #
  # (5)  B2 LINE OUTAGE (BREAKER-TO-BREAKER)
  # post-project
 1  31020 31005  "1 "    0     # line from  P0411BS1 115.00   (2) to BRKR  HMBLDT B 115.00
 2  31020 31180  "1 "    0     # TRAN from  P0411BS1 115.00   (2) to (1)   P0411G1   13.80
 4  31180     0  "SG"    0     # LOAD-DROP    P0411G1   13.80  LOAD==1.22(0.68)
 3  31180     0  "1 "    0     # GEN-DROP    P0411G1   13.80  GEN==16.64(0.91)
 3  31180     0  "2 "    0     # GEN-DROP    P0411G1   13.80  GEN==16.64(0.91)
 3  31180     0  "3 "    0     # GEN-DROP    P0411G1   13.80  GEN==16.64(0.91)
 3  31180     0  "4 "    0     # GEN-DROP    P0411G1   13.80  GEN==16.64(0.91)
 0
  #
  #
  # (6)  B2 LINE OUTAGE (BREAKER-TO-BREAKER)
  #
 1  31050 31051  "1 "    0     # line from  ORICK     60.00   (1) to (2)   BIG_LAGN  60.00
 1  31051 31052  "1 "    0     # line from  BIG_LAGN  60.00   (2) to (2)   TRINIDAD  60.00
 1  31052 31054  "1 "    0     # line from  TRINIDAD  60.00   (2) to BRKR  ESSX JCT  60.00
 4  31050     0  "1 "    0     # LOAD-DROP    ORICK     60.00  LOAD==2.38(0.48)
 4  31051     0  "1 "    0     # LOAD-DROP    BIG_LAGN  60.00  LOAD==0.76(0.15)
 4  31052     0  "1 "    0     # LOAD-DROP    TRINIDAD  60.00  LOAD==3.24(0.66)
 0
  #
  #
  # (7)  B2 LINE OUTAGE (BREAKER-TO-BREAKER)
  #
 1  31054 31056  "1 "    0     # line from  ESSX JCT  60.00   (3) to (2)   JANCK TP  60.00
 1  31054 31052  "1 "    0     # line from  ESSX JCT  60.00  BRKR to (1)   TRINIDAD  60.00
 1  31054 31063  "1 "    0     # line from  ESSX JCT  60.00   (3) to (3)   BCHIP_TP  60.00
 1  31056 31067  "1 "    0     # line from  JANCK TP  60.00   (2) to (2)   ARC_JT2X  60.00
 1  31063 31061  "1 "    0     # line from  BCHIP_TP  60.00   (3) to (1)   BCHIPMIL  60.00
 1  31063 31062  "1 "    0     # line from  BCHIP_TP  60.00   (3) to (2)   BLUE LKE  60.00
 1  31062 31064  "1 "    0     # line from  BLUE LKE  60.00   (2) to (3)   SMPSNTAP  60.00
 1  31064 31060  "1 "    0     # line from  SMPSNTAP  60.00   (3) to (2)   ULTR_PWR  60.00
 1  31064 31068  "1 "    0     # line from  SMPSNTAP  60.00   (3) to (1)   SIMPSON   60.00
 2  31060 31156  "1 "    0     # TRAN from  ULTR_PWR  60.00   (2) to (1)   ULTRAPWR  12.47
 1  31067 31080  "1 "    0     # line from  ARC_JT2X  60.00   (2) to BRKR  HUMBOLDT  60.00
 4  31061     0  "1 "    0     # LOAD-DROP    BCHIPMIL  60.00  LOAD==1.00(0.33)
 4  31062     0  "3 "    0     # LOAD-DROP    BLUE LKE  60.00  LOAD==3.65(0.74)
 4  31068     0  "1 "    0     # LOAD-DROP    SIMPSON   60.00  LOAD==3.80(2.36)
 0
  #
```

```
 #
 # (8)  B2 LINE OUTAGE (BREAKER-TO-BREAKER)
 #
1  31057 31058  "1 "    0     # line from  LP_FLKBD  60.00   (2) to (1)   JANS CRK  60.00
1  31057 31066  "1 "    0     # line from  LP_FLKBD  60.00   (2) to (3)   ARCTAJT1  60.00
1  31066 31072  "1 "    0     # line from  ARCTAJT1  60.00   (3) to BRKR  ARCATA    60.00
1  31066 31080  "1 "    0     # line from  ARCTAJT1  60.00   (3) to BRKR  HUMBOLDT  60.00
4  31057     0  "1 "    0     # LOAD-DROP    LP_FLKBD  60.00  LOAD==4.78(2.96)
4  31058     0  "1 "    0     # LOAD-DROP    JANS CRK  60.00  LOAD==3.54(0.72)
4  31058     0  "2 "    0     # LOAD-DROP    JANS CRK  60.00  LOAD==8.79(1.78)
1 31058 31056 "1"  1             #Line Transfer JANS CRK 60kV TO JANCK TP 60kV
4 31058     0 "**" 1             #Restore load at Janes Creek
0
 #
 #
 # (9)  B2 LINE OUTAGE (BREAKER-TO-BREAKER)
 #
1  31070 31072  "1 "    0     # line from  ARCTAJT2  60.00   (2) to BRKR  ARCATA    60.00
1  31070 31074  "1 "    0     # line from  ARCTAJT2  60.00   (2) to BRKR  FAIRHAVN  60.00
0
 #
 #
 # (10)  B2 LINE OUTAGE (BREAKER-TO-BREAKER)
 #
1  31071 31075  "1 "    0     # line from  ARCTA_J2  60.00   (2) to (2)   SIERA_PC  60.00
1  31071 31080  "1 "    0     # line from  ARCTA_J2  60.00   (2) to BRKR  HUMBOLDT  60.00
1  31075 31074  "1 "    0     # line from  SIERA_PC  60.00   (2) to BRKR  FAIRHAVN  60.00
4  31075     0  "1 "    0     # LOAD-DROP    SIERA_PC  60.00  LOAD==2.48(2.19)
0
 #
 #
 # (11)  B2 LINE OUTAGE (BREAKER-TO-BREAKER)
 #
1  31073 31076  "1 "    0     # line from  LP_JCT    60.00   (3) to (2)   LP-SAMOA  60.00
1  31073 31078  "1 "    0     # line from  LP_JCT    60.00   (3) to (3)   FPC       60.00
1  31073 31074  "1 "    0     # line from  LP_JCT    60.00   (3) to BRKR  FAIRHAVN  60.00
2  31076 31158  "1 "    0     # TRAN from  LP-SAMOA  60.00  BRKR to (1)   LP SAMOA  12.47
1  31078 31079  "1 "    0     # line from  FPC       60.00   (3) to (1)   SIM_PULP  60.00
2  31078 31150  "1 "    0     # TRAN from  FPC       60.00   (3) to (1)   FAIRHAVN  13.80
4  31158     0  "SG"    0     # LOAD-DROP    LP SAMOA  12.47  LOAD==10.51(6.51)
3  31158     0  "1 "    0     # GEN-DROP    LP SAMOA  12.47  GEN==12.00(11.46)
3  31150     0  "1 "    0     # GEN-DROP    FAIRHAVN  13.80  GEN==15.90(3.26)
0
 #
 #
 # (12)  B2 LINE OUTAGE (BREAKER-TO-BREAKER)
 #
1  31080 31082  "1 "    0     # line from  HUMBOLDT  60.00  BRKR to (2)   HARRIS    60.00
1  31082 31084  "1 "    0     # line from  HARRIS    60.00   (2) to (2)   HARRISST  60.00
1  31084 31086  "1 "    0     # line from  HARRISST  60.00   (2) to BRKR  EUREKA    60.00
4  31082     0  "1 "    0     # LOAD-DROP    HARRIS    60.00  LOAD==7.70(1.56)
4  31082     0  "2 "    0     # LOAD-DROP    HARRIS    60.00  LOAD==6.75(1.36)
0
 #
 #
 # (13)  B2 LINE OUTAGE (BREAKER-TO-BREAKER)
 #
1  31080 31088  "2 "    0     # line from  HUMBOLDT  60.00  BRKR to (2)   HMBLT JT  60.00
1  31088 31090  "2 "    0     # line from  HMBLT JT  60.00   (2) to BRKR  HMBLT BY  60.00
0
 #
 #
 # (14)  B2 LINE OUTAGE (BREAKER-TO-BREAKER)
 #
1  31080 31090  "1 "    0     # line from  HUMBOLDT  60.00  BRKR to BRKR  HMBLT BY  60.00
0
 #
 #
 # (15)  B2 LINE OUTAGE (BREAKER-TO-BREAKER)
 #
1  31080 31092  "1 "    0     # line from  HUMBOLDT  60.00  BRKR to BRKR  MPLE CRK  60.00
0
 #
 #
 # (16)  B2 LINE OUTAGE (BREAKER-TO-BREAKER)
 #
1  31086 31090  "1 "    0     # line from  EUREKA    60.00  BRKR to BRKR  HMBLT BY  60.00
0
 #
```

```
 #
 # (17)  B2 LINE OUTAGE (BREAKER-TO-BREAKER)
 #
1  31087 31086  "1 "    0     # line from  EUREKA A  60.00   (1) to BRKR  EUREKA    60.00
4  31087     0  "1 "    0     # LOAD-DROP    EUREKA A  60.00  LOAD==9.53(1.93)
0
 #
 #
 # (18)  B2 LINE OUTAGE (BREAKER-TO-BREAKER)
 #
1  31090 31100  "1 "    0     # line from  HMBLT BY  60.00  BRKR to (2)   EEL RIVR  60.00
1  31100 31102  "1 "    0     # line from  EEL RIVR  60.00   (2) to (2)   NEWBURG   60.00
1  31102 31105  "1 "    0     # line from  NEWBURG   60.00   (2) to BRKR  RIODLLTP  60.00
4  31100     0  "1 "    0     # LOAD-DROP    EEL RIVR  60.00  LOAD==9.53(1.93)
4  31102     0  "1 "    0     # LOAD-DROP    NEWBURG   60.00  LOAD==3.88(0.79)
4  31102     0  "2 "    0     # LOAD-DROP    NEWBURG   60.00  LOAD==7.64(1.55)
0
 #
 #
 # (19)  B2 LINE OUTAGE (BREAKER-TO-BREAKER)
 #
1  31091 31093  "1 "    0     # line from  RDGE CBN  60.00   (2) to (3)   HYMPOMJT  60.00
1  31091 31092  "1 "    0     # line from  RDGE CBN  60.00   (2) to BRKR  MPLE CRK  60.00
1  31093 31554  "1 "    0     # line from  HYMPOMJT  60.00   (3) to (2)   GROUSCRK  60.00
1  31093 31556  "1 "    0     # line from  HYMPOMJT  60.00   (3) to BRKR  TRINITY   60.00
2  31554 31850  "1 "    0     # TRAN from  GROUSCRK  60.00  BRKR to (1)   CEDR FL+   9.11
4  31554     0  "1 "    0     # LOAD-DROP    GROUSCRK  60.00  LOAD==0.94(0.21)
4  31554     0  "2 "    0     # LOAD-DROP    GROUSCRK  60.00  LOAD==0.12(0.03)
4  31554     0  "3 "    0     # LOAD-DROP    GROUSCRK  60.00  LOAD==0.30(0.07)
2  31554 31850  "1"     0     #Transformer gets dropped
4  31554     0  "**"    0     #Load gets dropped at GROUSCRK
0
 #
 #
 # (20)  B2 LINE OUTAGE (BREAKER-TO-BREAKER)
 #
1  31092 31094  "1 "    0     # line from  MPLE CRK  60.00  BRKR to (2)   RUSS RCH  60.00
1  31094 31096  "1 "    0     # line from  RUSS RCH  60.00   (2) to (2)   WILLWCRK  60.00
1  31096 31098  "1 "    0     # line from  WILLWCRK  60.00   (2) to (1)   HOOPA     60.00
4  31096     0  "1 "    0     # LOAD-DROP    WILLWCRK  60.00  LOAD==4.94(1.01)
4  31098     0  "1 "    0     # LOAD-DROP    HOOPA     60.00  LOAD==4.02(0.82)
0
 #
 #
 # (21)  B2 LINE OUTAGE (BREAKER-TO-BREAKER)
 #
1  31101 31105  "1 "    0     # line from  SCOTIATP  60.00   (3) to (3)   RIODLLTP  60.00
1  31101 31106  "1 "    0     # line from  SCOTIATP  60.00   (3) to BRKR  RIO DELL  60.00
1  31101 31109  "1 "    0     # line from  SCOTIATP  60.00   (3) to (2)   SCTIATP2  60.00
1  31105 31102  "1 "    0     # line from  RIODLLTP  60.00  BRKR to (1)   NEWBURG   60.00
1  31105 31104  "1 "    0     # line from  RIODLLTP  60.00  BRKR to (1)   CARLOTTA  60.00
2  31109 31152  "1 "    0     # TRAN from  SCTIATP2  60.00   (2) to (1)   PAC.LUMB  13.80
4  31106     0  "1 "    0     # LOAD-DROP    RIO DELL  60.00  LOAD==4.54(0.93)
4  31152     0  "SG"    0     # LOAD-DROP    PAC.LUMB  13.80  LOAD==0.35(0.07)
3  31152     0  "1 "    0     # GEN-DROP    PAC.LUMB  13.80  GEN==10.00(0.54)
3  31152     0  "2 "    0     # GEN-DROP    PAC.LUMB  13.80  GEN==10.00(0.54)
0
 #
 #
 # (22)  B2 LINE OUTAGE (BREAKER-TO-BREAKER)
 #
1  31104 31103  "1 "    0     # line from  CARLOTTA  60.00   (3) to (1)   PCLUMBER  60.00
1  31104 31105  "1 "    0     # line from  CARLOTTA  60.00   (3) to BRKR  RIODLLTP  60.00
1  31104 31108  "1 "    0     # line from  CARLOTTA  60.00   (3) to (2)   SWNS FLT  60.00
1  31108 31110  "1 "    0     # line from  SWNS FLT  60.00   (2) to BRKR  BRDGVLLE  60.00
4  31104     0  "1 "    0     # LOAD-DROP    CARLOTTA  60.00  LOAD==1.88(0.38)
4  31103     0  "1 "    0     # LOAD-DROP    PCLUMBER  60.00  LOAD==1.87(1.40)
0
 #
 #
 # (23)  B2 LINE OUTAGE (BREAKER-TO-BREAKER)
 #
1  31110 31120  "1 "    0     # line from  BRDGVLLE  60.00  BRKR to (3)   FRUTLDJT  60.00
1  31120 31112  "1 "    0     # line from  FRUTLDJT  60.00   (3) to (1)   FRUITLND  60.00
1  31120 31122  "1 "    0     # line from  FRUTLDJT  60.00   (3) to (3)   FTSWRDJT  60.00
1  31122 31114  "1 "    0     # line from  FTSWRDJT  60.00   (3) to (1)   FRT SWRD  60.00
1  31122 31116  "1 "    0     # line from  FTSWRDJT  60.00   (3) to BRKR  GRBRVLLE  60.00
4  31112     0  "1 "    0     # LOAD-DROP    FRUITLND  60.00  LOAD==2.47(0.50)
4  31114     0  "1 "    0     # LOAD-DROP    FRT SWRD  60.00  LOAD==0.32(0.07)
```

```
0
 #
 #
 # (24)  B2 LINE OUTAGE (BREAKER-TO-BREAKER)
 # post-project
1  31095 31090  "1 "    0     # line from  P0411BS2  60.00   (2) to BRKR  HMBLT BY  60.00
2  31095 31181  "1 "    0     # TRAN from  P0411BS2  60.00   (2) to (1)   P0411G2   13.80
4  31181     0  "SG"    0     # LOAD-DROP    P0411G2   13.80  LOAD==1.22(0.68)
3  31181     0  "5 "    0     # GEN-DROP    P0411G2   13.80  GEN==16.64(3.16)
3  31181     0  "6 "    0     # GEN-DROP    P0411G2   13.80  GEN==16.64(3.16)
3  31181     0  "7 "    0     # GEN-DROP    P0411G2   13.80  GEN==16.64(3.16)
0
 #
 #
 # (25)  B2 LINE OUTAGE (BREAKER-TO-BREAKER)
 # post-project
1  31097 31090  "1 "    0     # line from  P0411BS3  60.00   (2) to BRKR  HMBLT BY  60.00
2  31097 31182  "2 "    0     # TRAN from  P0411BS3  60.00   (2) to (1)   P0411G3   13.80
4  31182     0  "SG"    0     # LOAD-DROP    P0411G3   13.80  LOAD==1.22(0.68)
3  31182     0  "10"    0     # GEN-DROP    P0411G3   13.80  GEN==16.64(3.16)
3  31182     0  "8 "    0     # GEN-DROP    P0411G3   13.80  GEN==16.64(3.16)
3  31182     0  "9 "    0     # GEN-DROP    P0411G3   13.80  GEN==16.64(3.16)
0
 #
 #
 # (26)  B2 LINE OUTAGE (BREAKER-TO-BREAKER)
 #
1  31116 31118  "1 "    0     # line from  GRBRVLLE  60.00  BRKR to (3)   KEKAWAKA  60.00
1  31118 31308  "1 "    0     # line from  KEKAWAKA  60.00   (3) to (3)   LYTNVLLE  60.00
2  31118 31166  "1 "    0     # TRAN from  KEKAWAKA  60.00  BRKR to (1)   KEKAWAK    9.11
1  31308 31306  "1 "    0     # line from  LYTNVLLE  60.00   (3) to BRKR  WILLITS   60.00
1  31308 31310  "1 "    0     # line from  LYTNVLLE  60.00   (3) to (1)   COVELO6   60.00
4  31308     0  "1 "    0     # LOAD-DROP    LYTNVLLE  60.00  LOAD==5.39(1.09)
4  31310     0  "1 "    0     # LOAD-DROP    COVELO6   60.00  LOAD==2.49(0.50)
0
 #
 #
 # (27)  B3 TRANSFORMER OUTAGE (BREAKER-TO-BREAKER)
 #
2  31080 31000  "1 "    0     # TRAN from  HUMBOLDT  60.00  BRKR to (1)   HUMBOLDT 115.00
0
 #
 #
 # (28)  B3 TRANSFORMER OUTAGE (BREAKER-TO-BREAKER)
 #
2  31080 31000  "2 "    0     # TRAN from  HUMBOLDT  60.00  BRKR to BRKR  HUMBOLDT 115.00
0
 #
 #
 # (29)  B3 TRANSFORMER OUTAGE (BREAKER-TO-BREAKER)
 #
2  31110 31015  "1 "    0     # TRAN from  BRDGVLLE  60.00  BRKR to (1)   BRDGVLLE 115.00
0
 #
 #
 # (30)  B3 TRANSFORMER OUTAGE (BREAKER-TO-BREAKER)
 #
2  31158 31076  "1 "    0     # TRAN from  LP SAMOA  12.47   (1) to BRKR  LP-SAMOA  60.00
4  31158     0  "SG"    0     # LOAD-DROP    LP SAMOA  12.47  LOAD==10.51(6.51)
3  31158     0  "1 "    0     # GEN-DROP    LP SAMOA  12.47  GEN==12.00(11.46)
0
 #
 #
 # (31)  B1 GENERATOR OUTAGE
 # pre and post-project outage  MEPPS Unit 1/Ramco HEF Unit 1
3  31154     0  "1"     0     # HUMBOLDT  13.80       PGEN=15.00  QGEN=-3.00  # pre-project
3  31180     0  "1"     0     # P0411G1   13.80       PGEN=16.64  QGEN=0.91   # post-project
0
 #
 #
 # (32)  B1 GENERATOR OUTAGE
 #
3  31160     0  "1"     0     # HMBLT TT  12.00       PGEN=0.00  QGEN=-10.00
0
 #
 #
 # (33)  B1 GENERATOR OUTAGE
 # pre and post-project outage Humboldt Bay Unit 1/Ramco HEF Unit 5
3  31170     0  "1"     0     # HMBOLDT1  13.80       PGEN=50.00  QGEN=12.96  # pre-project
```

```
3  31181     0  "5"     0     # P0411G2   13.80       PGEN=16.64  QGEN=3.16   # post-project
0
 #
 #
 # (34)  B1 GENERATOR OUTAGE
 # pre and post-project outage Humboldt Bay Unit 2/Ramco HEF Unit 10
3  31172     0  "1"     0     # HMBOLDT2  13.80       PGEN=50.00  QGEN=11.80  # pre-project
3  31182     0  "10"     0     # P0411G3   13.80       PGEN=16.64  QGEN=3.16  # post-project
0
 #
 #
 # (35)  B1 GENERATOR OUTAGE
 #
3  31158     0  "1"     0     # LP SAMOA  12.47       PGEN=12.00  QGEN=12.50
0
 #
 #
 # (36)  B1 GENERATOR OUTAGE
 #
3  31150     0  "1"     0     # FAIRHAVN  13.80       PGEN=15.90  QGEN=5.44
0
 #
 #
 # (37)  B1 GENERATOR OUTAGE
 #
3  31152     0  "1"     0     # PAC.LUMB  13.80       PGEN=10.00  QGEN=0.69
0
 #
 #
 # (38)  B1 GENERATOR OUTAGE
 #
3  31152     0  "2"     0     # PAC.LUMB  13.80       PGEN=10.00  QGEN=0.69
0
 #
 #
 # (39)  L-1/G-1 OVERLAPPING OUTAGE
 # Humboldt - Arcata - Janes Creek 60 kV Line and Fairhaven
1  31057 31058  "1 "    0     # line from  LP_FLKBD  60.00   (2) to (1)   JANS CRK  60.00
1  31057 31066  "1 "    0     # line from  LP_FLKBD  60.00   (2) to (3)   ARCTAJT1  60.00
1  31066 31072  "1 "    0     # line from  ARCTAJT1  60.00   (3) to BRKR  ARCATA    60.00
1  31066 31080  "1 "    0     # line from  ARCTAJT1  60.00   (3) to BRKR  HUMBOLDT  60.00
4  31057     0  "1 "    0     # LOAD-DROP    LP_FLKBD  60.00  LOAD==4.78(2.96)
4  31058     0  "1 "    0     # LOAD-DROP    JANS CRK  60.00  LOAD==3.54(0.72)
4  31058     0  "2 "    0     # LOAD-DROP    JANS CRK  60.00  LOAD==8.79(1.78)
1 31058 31056 "1"  1             #Line Transfer JANS CRK 60kV TO JANCK TP 60kV
4 31058     0 "**" 1             #Restore load at Janes Creek
 #
3  31150     0  "1"     0     # FAIRHAVN  13.80       PGEN=15.90  QGEN=5.44
0
 #
 #
 # (40)  L-/G-1 OVERLAPPING OUTAGE
 # Humboldt - Humboldt Bay 115 kV Line and Humboldt Bay Unit 1/Ramco HEF Unit 5
1  31000 31005  "1 "    0     # line from  HUMBOLDT 115.00  BRKR to BRKR  HMBLDT B 115.00
 #
3  31170     0  "1"     0     # HMBOLDT1  13.80       PGEN=50.00  QGEN=12.96  # pre-project
3  31181     0  "5"     0     # P0411G2   13.80       PGEN=16.64  QGEN=3.16   # post-project
0
 #
 #
 # (41)  L-/G-1 OVERLAPPING OUTAGE
 # Humboldt - Bridgeville 115 kV Line and Humboldt Bay Unit 1/Ramco HEF Unit 5
1  31000 31015  "1 "    0     # line from  HUMBOLDT 115.00  BRKR to BRKR  BRDGVLLE 115.00
 #
3  31170     0  "1"     0     # HMBOLDT1  13.80       PGEN=50.00  QGEN=12.96  # pre-project
3  31181     0  "5"     0     # P0411G2   13.80       PGEN=16.64  QGEN=3.16   # post-project
0
 #
 #
 # (42)  L-/G-1 OVERLAPPING OUTAGE
 # Humboldt - Trinity 115 kV Line and Humboldt Bay Unit 1/Ramco HEF Unit 5
1  31000 31452  "1 "    0     # line from  HUMBOLDT 115.00  BRKR to BRKR  TRINITY  115.00
 #
3  31170     0  "1"     0     # HMBOLDT1  13.80       PGEN=50.00  QGEN=12.96  # pre-project
3  31181     0  "5"     0     # P0411G2   13.80       PGEN=16.64  QGEN=3.16   # post-project
0
 #
 #
 # (43)  L-/G-1 OVERLAPPING OUTAGE
```

```
 # Bridgeville - Cottonwood 115 kV Line and Humboldt Bay Unit 1/Ramco HEF Unit 5
1  31010 31015  "1 "    0     # line from  LOW GAP1 115.00   (2) to BRKR  BRDGVLLE 115.00
1  31010 31450  "1 "    0     # line from  LOW GAP1 115.00   (2) to (2)   WILDWOOD 115.00
1  31450 31464  "1 "    0     # line from  WILDWOOD 115.00   (2) to BRKR  COTWDPGE 115.00
4  31010     0  "1 "    0     # LOAD-DROP    LOW GAP1 115.00  LOAD==0.64(0.31)
4  31450     0  "1 "    0     # LOAD-DROP    WILDWOOD 115.00  LOAD==0.35(0.07)
 #
3  31170     0  "1"     0     # HMBOLDT1  13.80       PGEN=50.00  QGEN=12.96  # pre-project
3  31181     0  "5"     0     # P0411G2   13.80       PGEN=16.64  QGEN=3.16   # post-project
0
 #
 #
 # (44)  L-/G-1 OVERLAPPING OUTAGE
 # Essex Junction - Orick 60 kV Line and Humboldt Bay Unit 1/Ramco HEF Unit 5
1  31050 31051  "1 "    0     # line from  ORICK     60.00   (1) to (2)   BIG_LAGN  60.00
1  31051 31052  "1 "    0     # line from  BIG_LAGN  60.00   (2) to (2)   TRINIDAD  60.00
1  31052 31054  "1 "    0     # line from  TRINIDAD  60.00   (2) to BRKR  ESSX JCT  60.00
4  31050     0  "1 "    0     # LOAD-DROP    ORICK     60.00  LOAD==2.38(0.48)
4  31051     0  "1 "    0     # LOAD-DROP    BIG_LAGN  60.00  LOAD==0.76(0.15)
4  31052     0  "1 "    0     # LOAD-DROP    TRINIDAD  60.00  LOAD==3.24(0.66)
 #
3  31170     0  "1"     0     # HMBOLDT1  13.80       PGEN=50.00  QGEN=12.96  # pre-project
3  31181     0  "5"     0     # P0411G2   13.80       PGEN=16.64  QGEN=3.16   # post-project
0
 #
 #
 # (45)  L-/G-1 OVERLAPPING OUTAGE
 # Essex Junction - Arcata - Humboldt 60 kV Line and Humboldt Bay Unit 1/Ramco HEF Unit 5
1  31054 31056  "1 "    0     # line from  ESSX JCT  60.00   (3) to (2)   JANCK TP  60.00
1  31054 31052  "1 "    0     # line from  ESSX JCT  60.00  BRKR to (1)   TRINIDAD  60.00
1  31054 31063  "1 "    0     # line from  ESSX JCT  60.00   (3) to (3)   BCHIP_TP  60.00
1  31056 31067  "1 "    0     # line from  JANCK TP  60.00   (2) to (2)   ARC_JT2X  60.00
1  31063 31061  "1 "    0     # line from  BCHIP_TP  60.00   (3) to (1)   BCHIPMIL  60.00
1  31063 31062  "1 "    0     # line from  BCHIP_TP  60.00   (3) to (2)   BLUE LKE  60.00
1  31062 31064  "1 "    0     # line from  BLUE LKE  60.00   (2) to (3)   SMPSNTAP  60.00
1  31064 31060  "1 "    0     # line from  SMPSNTAP  60.00   (3) to (2)   ULTR_PWR  60.00
1  31064 31068  "1 "    0     # line from  SMPSNTAP  60.00   (3) to (1)   SIMPSON   60.00
2  31060 31156  "1 "    0     # TRAN from  ULTR_PWR  60.00   (2) to (1)   ULTRAPWR  12.47
1  31067 31080  "1 "    0     # line from  ARC_JT2X  60.00   (2) to BRKR  HUMBOLDT  60.00
4  31061     0  "1 "    0     # LOAD-DROP    BCHIPMIL  60.00  LOAD==1.00(0.33)
4  31062     0  "3 "    0     # LOAD-DROP    BLUE LKE  60.00  LOAD==3.65(0.74)
4  31068     0  "1 "    0     # LOAD-DROP    SIMPSON   60.00  LOAD==3.80(2.36)
 #
3  31170     0  "1"     0     # HMBOLDT1  13.80       PGEN=50.00  QGEN=12.96  # pre-project
3  31181     0  "5"     0     # P0411G2   13.80       PGEN=16.64  QGEN=3.16   # post-project
0
 #
 #
 # (46)  L-/G-1 OVERLAPPING OUTAGE
 # Humboldt - Arcata - Janes Creek 60 kV Line and Humboldt Bay Unit 1/Ramco HEF Unit 5
1  31057 31058  "1 "    0     # line from  LP_FLKBD  60.00   (2) to (1)   JANS CRK  60.00
1  31057 31066  "1 "    0     # line from  LP_FLKBD  60.00   (2) to (3)   ARCTAJT1  60.00
1  31066 31072  "1 "    0     # line from  ARCTAJT1  60.00   (3) to BRKR  ARCATA    60.00
1  31066 31080  "1 "    0     # line from  ARCTAJT1  60.00   (3) to BRKR  HUMBOLDT  60.00
4  31057     0  "1 "    0     # LOAD-DROP    LP_FLKBD  60.00  LOAD==4.78(2.96)
4  31058     0  "1 "    0     # LOAD-DROP    JANS CRK  60.00  LOAD==3.54(0.72)
4  31058     0  "2 "    0     # LOAD-DROP    JANS CRK  60.00  LOAD==8.79(1.78)
1 31058 31056 "1"  1             #Line Transfer JANS CRK 60kV TO JANCK TP 60kV
4 31058     0 "**" 1             #Restore load at Janes Creek
 #
3  31170     0  "1"     0     # HMBOLDT1  13.80       PGEN=50.00  QGEN=12.96  # pre-project
3  31181     0  "5"     0     # P0411G2   13.80       PGEN=16.64  QGEN=3.16   # post-project
0
 #
 #
 # (47)  L-/G-1 OVERLAPPING OUTAGE
 # Arcata - Fairhaven 60 kV Line and Humboldt Bay Unit 1/Ramco HEF Unit 5
1  31070 31072  "1 "    0     # line from  ARCTAJT2  60.00   (2) to BRKR  ARCATA    60.00
1  31070 31074  "1 "    0     # line from  ARCTAJT2  60.00   (2) to BRKR  FAIRHAVN  60.00
 #
3  31170     0  "1"     0     # HMBOLDT1  13.80       PGEN=50.00  QGEN=12.96  # pre-project
3  31181     0  "5"     0     # P0411G2   13.80       PGEN=16.64  QGEN=3.16   # post-project
0
 #
 #
 # (48)  L-/G-1 OVERLAPPING OUTAGE
 # Humboldt - Fairhaven 60 kV Line and Humboldt Bay Unit 1/Ramco HEF Unit 5
1  31071 31075  "1 "    0     # line from  ARCTA_J2  60.00   (2) to (2)   SIERA_PC  60.00
1  31071 31080  "1 "    0     # line from  ARCTA_J2  60.00   (2) to BRKR  HUMBOLDT  60.00
```

```
1  31075 31074  "1 "    0     # line from  SIERA_PC  60.00   (2) to BRKR  FAIRHAVN  60.00
4  31075     0  "1 "    0     # LOAD-DROP    SIERA_PC  60.00  LOAD==2.48(2.19)
 #
3  31170     0  "1"     0     # HMBOLDT1  13.80       PGEN=50.00  QGEN=12.96  # pre-project
3  31181     0  "5"     0     # P0411G2   13.80       PGEN=16.64  QGEN=3.16   # post-project
0
 #
 #
 # (49)  L-/G-1 OVERLAPPING OUTAGE
 # Fairhaven #1 60 kV Line and Humboldt Bay Unit 1/Ramco HEF Unit 5
1  31073 31076  "1 "    0     # line from  LP_JCT    60.00   (3) to (2)   LP-SAMOA  60.00
1  31073 31078  "1 "    0     # line from  LP_JCT    60.00   (3) to (3)   FPC       60.00
1  31073 31074  "1 "    0     # line from  LP_JCT    60.00   (3) to BRKR  FAIRHAVN  60.00
2  31076 31158  "1 "    0     # TRAN from  LP-SAMOA  60.00  BRKR to (1)   LP SAMOA  12.47
1  31078 31079  "1 "    0     # line from  FPC       60.00   (3) to (1)   SIM_PULP  60.00
2  31078 31150  "1 "    0     # TRAN from  FPC       60.00   (3) to (1)   FAIRHAVN  13.80
4  31158     0  "SG"    0     # LOAD-DROP    LP SAMOA  12.47  LOAD==10.51(6.51)
3  31158     0  "1 "    0     # GEN-DROP    LP SAMOA  12.47  GEN==12.00(11.46)
3  31150     0  "1 "    0     # GEN-DROP    FAIRHAVN  13.80  GEN==15.90(3.26)
 #
3  31170     0  "1"     0     # HMBOLDT1  13.80       PGEN=50.00  QGEN=12.96  # pre-project
3  31181     0  "5"     0     # P0411G2   13.80       PGEN=16.64  QGEN=3.16   # post-project
0
 #
 #
 # (50)  L-/G-1 OVERLAPPING OUTAGE
 # Humboldt - Eureka 60 kV Line and Humboldt Bay Unit 1/Ramco HEF Unit 5
1  31080 31082  "1 "    0     # line from  HUMBOLDT  60.00  BRKR to (2)   HARRIS    60.00
1  31082 31084  "1 "    0     # line from  HARRIS    60.00   (2) to (2)   HARRISST  60.00
1  31084 31086  "1 "    0     # line from  HARRISST  60.00   (2) to BRKR  EUREKA    60.00
4  31082     0  "1 "    0     # LOAD-DROP    HARRIS    60.00  LOAD==7.70(1.56)
4  31082     0  "2 "    0     # LOAD-DROP    HARRIS    60.00  LOAD==6.75(1.36)
 #
3  31170     0  "1"     0     # HMBOLDT1  13.80       PGEN=50.00  QGEN=12.96  # pre-project
3  31181     0  "5"     0     # P0411G2   13.80       PGEN=16.64  QGEN=3.16   # post-project
0
 #
 #
 # (51)  L-/G-1 OVERLAPPING OUTAGE
 # Humboldt - Humboldt Bay #1 60 kV Line and Humboldt Bay Unit 1/Ramco HEF Unit 5
1  31080 31088  "2 "    0     # line from  HUMBOLDT  60.00  BRKR to (2)   HMBLT JT  60.00
1  31088 31090  "2 "    0     # line from  HMBLT JT  60.00   (2) to BRKR  HMBLT BY  60.00
 #
3  31170     0  "1"     0     # HMBOLDT1  13.80       PGEN=50.00  QGEN=12.96  # pre-project
3  31181     0  "5"     0     # P0411G2   13.80       PGEN=16.64  QGEN=3.16   # post-project
0
 #
 #
 # (52)  L-/G-1 OVERLAPPING OUTAGE
 # Humboldt - Humboldt Bay #2 60 kV Line and Humboldt Bay Unit 1/Ramco HEF Unit 5
1  31080 31090  "1 "    0     # line from  HUMBOLDT  60.00  BRKR to BRKR  HMBLT BY  60.00
 #
3  31170     0  "1"     0     # HMBOLDT1  13.80       PGEN=50.00  QGEN=12.96  # pre-project
3  31181     0  "5"     0     # P0411G2   13.80       PGEN=16.64  QGEN=3.16   # post-project
0
 #
 #
 # (53)  L-/G-1 OVERLAPPING OUTAGE
 # Humboldt - Maple Creek 60 kV Line and Humboldt Bay Unit 1/Ramco HEF Unit 5
1  31080 31092  "1 "    0     # line from  HUMBOLDT  60.00  BRKR to BRKR  MPLE CRK  60.00
 #
3  31170     0  "1"     0     # HMBOLDT1  13.80       PGEN=50.00  QGEN=12.96  # pre-project
3  31181     0  "5"     0     # P0411G2   13.80       PGEN=16.64  QGEN=3.16   # post-project
0
 #
 #
 # (54)  L-/G-1 OVERLAPPING OUTAGE
 # Humboldt Bay - Eureka 60 kV Line and Humboldt Bay Unit 1/Ramco HEF Unit 5
1  31086 31090  "1 "    0     # line from  EUREKA    60.00  BRKR to BRKR  HMBLT BY  60.00
 #
3  31170     0  "1"     0     # HMBOLDT1  13.80       PGEN=50.00  QGEN=12.96  # pre-project
3  31181     0  "5"     0     # P0411G2   13.80       PGEN=16.64  QGEN=3.16   # post-project
0
 #
 #
 # (55)  L-/G-1 OVERLAPPING OUTAGE
 # Eureka Station A 60 kV Line and Humboldt Bay Unit 1/Ramco HEF Unit 5
1  31087 31086  "1 "    0     # line from  EUREKA A  60.00   (1) to BRKR  EUREKA    60.00
4  31087     0  "1 "    0     # LOAD-DROP    EUREKA A  60.00  LOAD==9.53(1.93)
```

```
 #
3  31170     0  "1"     0     # HMBOLDT1  13.80       PGEN=50.00  QGEN=12.96  # pre-project
3  31181     0  "5"     0     # P0411G2   13.80       PGEN=16.64  QGEN=3.16   # post-project
0
 #
 #
 # (56)  L-/G-1 OVERLAPPING OUTAGE
 # Humboldt Bay - Rio Dell Junction 60 kV Line and Humboldt Bay Unit 1/Ramco HEF Unit 5
1  31090 31100  "1 "    0     # line from  HMBLT BY  60.00  BRKR to (2)   EEL RIVR  60.00
1  31100 31102  "1 "    0     # line from  EEL RIVR  60.00   (2) to (2)   NEWBURG   60.00
1  31102 31105  "1 "    0     # line from  NEWBURG   60.00   (2) to BRKR  RIODLLTP  60.00
4  31100     0  "1 "    0     # LOAD-DROP    EEL RIVR  60.00  LOAD==9.53(1.93)
4  31102     0  "1 "    0     # LOAD-DROP    NEWBURG   60.00  LOAD==3.88(0.79)
4  31102     0  "2 "    0     # LOAD-DROP    NEWBURG   60.00  LOAD==7.64(1.55)
 #
3  31170     0  "1"     0     # HMBOLDT1  13.80       PGEN=50.00  QGEN=12.96  # pre-project
3  31181     0  "5"     0     # P0411G2   13.80       PGEN=16.64  QGEN=3.16   # post-project
0
 #
 #
 # (57)  L-/G-1 OVERLAPPING OUTAGE
 # Trinity - Maple Creek 60 kV Line and Humboldt Bay Unit 1/Ramco HEF Unit 5
1  31091 31093  "1 "    0     # line from  RDGE CBN  60.00   (2) to (3)   HYMPOMJT  60.00
1  31091 31092  "1 "    0     # line from  RDGE CBN  60.00   (2) to BRKR  MPLE CRK  60.00
1  31093 31554  "1 "    0     # line from  HYMPOMJT  60.00   (3) to (2)   GROUSCRK  60.00
1  31093 31556  "1 "    0     # line from  HYMPOMJT  60.00   (3) to BRKR  TRINITY   60.00
2  31554 31850  "1 "    0     # TRAN from  GROUSCRK  60.00  BRKR to (1)   CEDR FL+   9.11
4  31554     0  "1 "    0     # LOAD-DROP    GROUSCRK  60.00  LOAD==0.94(0.21)
4  31554     0  "2 "    0     # LOAD-DROP    GROUSCRK  60.00  LOAD==0.12(0.03)
4  31554     0  "3 "    0     # LOAD-DROP    GROUSCRK  60.00  LOAD==0.30(0.07)
2  31554 31850  "1"     0     #Transformer gets dropped
4  31554     0  "**"    0     #Load gets dropped at GROUSCRK
 #
3  31170     0  "1"     0     # HMBOLDT1  13.80       PGEN=50.00  QGEN=12.96  # pre-project
3  31181     0  "5"     0     # P0411G2   13.80       PGEN=16.64  QGEN=3.16   # post-project
0
 #
 #
 # (58)  L-/G-1 OVERLAPPING OUTAGE
 # Maple Creek - Hoopa 60 kV Line and Humboldt Bay Unit 1/Ramco HEF Unit 5
1  31092 31094  "1 "    0     # line from  MPLE CRK  60.00  BRKR to (2)   RUSS RCH  60.00
1  31094 31096  "1 "    0     # line from  RUSS RCH  60.00   (2) to (2)   WILLWCRK  60.00
1  31096 31098  "1 "    0     # line from  WILLWCRK  60.00   (2) to (1)   HOOPA     60.00
4  31096     0  "1 "    0     # LOAD-DROP    WILLWCRK  60.00  LOAD==4.94(1.01)
4  31098     0  "1 "    0     # LOAD-DROP    HOOPA     60.00  LOAD==4.02(0.82)
 #
3  31170     0  "1"     0     # HMBOLDT1  13.80       PGEN=50.00  QGEN=12.96  # pre-project
3  31181     0  "5"     0     # P0411G2   13.80       PGEN=16.64  QGEN=3.16   # post-project
0
 #
 #
 # (59)  L-/G-1 OVERLAPPING OUTAGE
 # Rio Dell 60 kV Tap Line and Humboldt Bay Unit 1/Ramco HEF Unit 5
1  31101 31105  "1 "    0     # line from  SCOTIATP  60.00   (3) to (3)   RIODLLTP  60.00
1  31101 31106  "1 "    0     # line from  SCOTIATP  60.00   (3) to BRKR  RIO DELL  60.00
1  31101 31109  "1 "    0     # line from  SCOTIATP  60.00   (3) to (2)   SCTIATP2  60.00
1  31105 31102  "1 "    0     # line from  RIODLLTP  60.00  BRKR to (1)   NEWBURG   60.00
1  31105 31104  "1 "    0     # line from  RIODLLTP  60.00  BRKR to (1)   CARLOTTA  60.00
2  31109 31152  "1 "    0     # TRAN from  SCTIATP2  60.00   (2) to (1)   PAC.LUMB  13.80
4  31106     0  "1 "    0     # LOAD-DROP    RIO DELL  60.00  LOAD==4.54(0.93)
4  31152     0  "SG"    0     # LOAD-DROP    PAC.LUMB  13.80  LOAD==0.35(0.07)
3  31152     0  "1 "    0     # GEN-DROP    PAC.LUMB  13.80  GEN==10.00(0.54)
3  31152     0  "2 "    0     # GEN-DROP    PAC.LUMB  13.80  GEN==10.00(0.54)
 #
3  31170     0  "1"     0     # HMBOLDT1  13.80       PGEN=50.00  QGEN=12.96  # pre-project
3  31181     0  "5"     0     # P0411G2   13.80       PGEN=16.64  QGEN=3.16   # post-project
0
 #
 #
 # (60)  L-/G-1 OVERLAPPING OUTAGE
 # Rio Dell Junction - Bridgeville 60 kV Line and Humboldt Bay Unit 1/Ramco HEF Unit 5
1  31104 31103  "1 "    0     # line from  CARLOTTA  60.00   (3) to (1)   PCLUMBER  60.00
1  31104 31105  "1 "    0     # line from  CARLOTTA  60.00   (3) to BRKR  RIODLLTP  60.00
1  31104 31108  "1 "    0     # line from  CARLOTTA  60.00   (3) to (2)   SWNS FLT  60.00
1  31108 31110  "1 "    0     # line from  SWNS FLT  60.00   (2) to BRKR  BRDGVLLE  60.00
4  31104     0  "1 "    0     # LOAD-DROP    CARLOTTA  60.00  LOAD==1.88(0.38)
4  31103     0  "1 "    0     # LOAD-DROP    PCLUMBER  60.00  LOAD==1.87(1.40)
 #
3  31170     0  "1"     0     # HMBOLDT1  13.80       PGEN=50.00  QGEN=12.96  # pre-project
```

```
3  31181     0  "5"     0     # P0411G2   13.80       PGEN=16.64  QGEN=3.16   # post-project
0
 #
 #
 # (61)  L-/G-1 OVERLAPPING OUTAGE
 # Bridgeville - Garberville 60 kV Line and Humboldt Bay Unit 1/Ramco HEF Unit 5
1  31110 31120  "1 "    0     # line from  BRDGVLLE  60.00  BRKR to (3)   FRUTLDJT  60.00
1  31120 31112  "1 "    0     # line from  FRUTLDJT  60.00   (3) to (1)   FRUITLND  60.00
1  31120 31122  "1 "    0     # line from  FRUTLDJT  60.00   (3) to (3)   FTSWRDJT  60.00
1  31122 31114  "1 "    0     # line from  FTSWRDJT  60.00   (3) to (1)   FRT SWRD  60.00
1  31122 31116  "1 "    0     # line from  FTSWRDJT  60.00   (3) to BRKR  GRBRVLLE  60.00
4  31112     0  "1 "    0     # LOAD-DROP    FRUITLND  60.00  LOAD==2.47(0.50)
4  31114     0  "1 "    0     # LOAD-DROP    FRT SWRD  60.00  LOAD==0.32(0.07)
 #
3  31170     0  "1"     0     # HMBOLDT1  13.80       PGEN=50.00  QGEN=12.96  # pre-project
3  31181     0  "5"     0     # P0411G2   13.80       PGEN=16.64  QGEN=3.16   # post-project
0
 #
 #
 # (62)  L-/G-1 OVERLAPPING OUTAGE
 # Willits - Garberville 60 kV Line and Humboldt Bay Unit 1/Ramco HEF Unit 5
1  31116 31118  "1 "    0     # line from  GRBRVLLE  60.00  BRKR to (3)   KEKAWAKA  60.00
1  31118 31308  "1 "    0     # line from  KEKAWAKA  60.00   (3) to (3)   LYTNVLLE  60.00
2  31118 31166  "1 "    0     # TRAN from  KEKAWAKA  60.00  BRKR to (1)   KEKAWAK    9.11
1  31308 31306  "1 "    0     # line from  LYTNVLLE  60.00   (3) to BRKR  WILLITS   60.00
1  31308 31310  "1 "    0     # line from  LYTNVLLE  60.00   (3) to (1)   COVELO6   60.00
4  31308     0  "1 "    0     # LOAD-DROP    LYTNVLLE  60.00  LOAD==5.39(1.09)
4  31310     0  "1 "    0     # LOAD-DROP    COVELO6   60.00  LOAD==2.49(0.50)
 #
3  31170     0  "1"     0     # HMBOLDT1  13.80       PGEN=50.00  QGEN=12.96  # pre-project
3  31181     0  "5"     0     # P0411G2   13.80       PGEN=16.64  QGEN=3.16   # post-project
0
 #
 #
 # (63)  L-/G-1 OVERLAPPING OUTAGE
 # Humboldt - Humboldt Bay 115 kV Line and MEPPS Unit 1/Ramco HEF Unit 1
1  31000 31005  "1 "    0     # line from  HUMBOLDT 115.00  BRKR to BRKR  HMBLDT B 115.00
 #
3  31154     0  "1"     0     # HUMBOLDT  13.80       PGEN=15.00  QGEN=-3.00  # pre-project
3  31180     0  "1"     0     # P0411G1   13.80       PGEN=16.64  QGEN=0.91   # post-project
0
 #
 #
 # (64)  L-/G-1 OVERLAPPING OUTAGE
 # Humboldt - Bridgeville 115 kV Line and MEPPS Unit 1/Ramco HEF Unit 1
1  31000 31015  "1 "    0     # line from  HUMBOLDT 115.00  BRKR to BRKR  BRDGVLLE 115.00
 #
3  31154     0  "1"     0     # HUMBOLDT  13.80       PGEN=15.00  QGEN=-3.00  # pre-project
3  31180     0  "1"     0     # P0411G1   13.80       PGEN=16.64  QGEN=0.91   # post-project
0
 #
 #
 # (65)  L-/G-1 OVERLAPPING OUTAGE
 # Humboldt - Trinity 115 kV Line and MEPPS Unit 1/Ramco HEF Unit 1
1  31000 31452  "1 "    0     # line from  HUMBOLDT 115.00  BRKR to BRKR  TRINITY  115.00
 #
3  31154     0  "1"     0     # HUMBOLDT  13.80       PGEN=15.00  QGEN=-3.00  # pre-project
3  31180     0  "1"     0     # P0411G1   13.80       PGEN=16.64  QGEN=0.91   # post-project
0
 #
 #
 # (66)  L-/G-1 OVERLAPPING OUTAGE
 # Bridgeville - Cottonwood 115 kV Line and MEPPS Unit 1/Ramco HEF Unit 1
1  31010 31015  "1 "    0     # line from  LOW GAP1 115.00   (2) to BRKR  BRDGVLLE 115.00
1  31010 31450  "1 "    0     # line from  LOW GAP1 115.00   (2) to (2)   WILDWOOD 115.00
1  31450 31464  "1 "    0     # line from  WILDWOOD 115.00   (2) to BRKR  COTWDPGE 115.00
4  31010     0  "1 "    0     # LOAD-DROP    LOW GAP1 115.00  LOAD==0.64(0.31)
4  31450     0  "1 "    0     # LOAD-DROP    WILDWOOD 115.00  LOAD==0.35(0.07)
 #
3  31154     0  "1"     0     # HUMBOLDT  13.80       PGEN=15.00  QGEN=-3.00  # pre-project
3  31180     0  "1"     0     # P0411G1   13.80       PGEN=16.64  QGEN=0.91   # post-project
0
 #
 #
 # (67)  L-/G-1 OVERLAPPING OUTAGE
 # Essex Junction - Orick 60 kV Line and MEPPS Unit 1/Ramco HEF Unit 1
1  31050 31051  "1 "    0     # line from  ORICK     60.00   (1) to (2)   BIG_LAGN  60.00
1  31051 31052  "1 "    0     # line from  BIG_LAGN  60.00   (2) to (2)   TRINIDAD  60.00
1  31052 31054  "1 "    0     # line from  TRINIDAD  60.00   (2) to BRKR  ESSX JCT  60.00
```

```
4  31050     0  "1 "    0     # LOAD-DROP    ORICK     60.00  LOAD==2.38(0.48)
4  31051     0  "1 "    0     # LOAD-DROP    BIG_LAGN  60.00  LOAD==0.76(0.15)
4  31052     0  "1 "    0     # LOAD-DROP    TRINIDAD  60.00  LOAD==3.24(0.66)
 #
3  31154     0  "1"     0     # HUMBOLDT  13.80       PGEN=15.00  QGEN=-3.00  # pre-project
3  31180     0  "1"     0     # P0411G1   13.80       PGEN=16.64  QGEN=0.91   # post-project
0
 #
 #
 # (68)  L-/G-1 OVERLAPPING OUTAGE
 # Essex Junction - Arcata - Humboldt 60 kV Line and MEPPS Unit 1/Ramco HEF Unit 1
1  31054 31056  "1 "    0     # line from  ESSX JCT  60.00   (3) to (2)   JANCK TP  60.00
1  31054 31052  "1 "    0     # line from  ESSX JCT  60.00  BRKR to (1)   TRINIDAD  60.00
1  31054 31063  "1 "    0     # line from  ESSX JCT  60.00   (3) to (3)   BCHIP_TP  60.00
1  31056 31067  "1 "    0     # line from  JANCK TP  60.00   (2) to (2)   ARC_JT2X  60.00
1  31063 31061  "1 "    0     # line from  BCHIP_TP  60.00   (3) to (1)   BCHIPMIL  60.00
1  31063 31062  "1 "    0     # line from  BCHIP_TP  60.00   (3) to (2)   BLUE LKE  60.00
1  31062 31064  "1 "    0     # line from  BLUE LKE  60.00   (2) to (3)   SMPSNTAP  60.00
1  31064 31060  "1 "    0     # line from  SMPSNTAP  60.00   (3) to (2)   ULTR_PWR  60.00
1  31064 31068  "1 "    0     # line from  SMPSNTAP  60.00   (3) to (1)   SIMPSON   60.00
2  31060 31156  "1 "    0     # TRAN from  ULTR_PWR  60.00   (2) to (1)   ULTRAPWR  12.47
1  31067 31080  "1 "    0     # line from  ARC_JT2X  60.00   (2) to BRKR  HUMBOLDT  60.00
4  31061     0  "1 "    0     # LOAD-DROP    BCHIPMIL  60.00  LOAD==1.00(0.33)
4  31062     0  "3 "    0     # LOAD-DROP    BLUE LKE  60.00  LOAD==3.65(0.74)
4  31068     0  "1 "    0     # LOAD-DROP    SIMPSON   60.00  LOAD==3.80(2.36)
 #
3  31154     0  "1"     0     # HUMBOLDT  13.80       PGEN=15.00  QGEN=-3.00  # pre-project
3  31180     0  "1"     0     # P0411G1   13.80       PGEN=16.64  QGEN=0.91   # post-project
0
 #
 #
 # (69)  L-/G-1 OVERLAPPING OUTAGE
 # Humboldt - Arcata - Janes Creek 60 kV Line and MEPPS Unit 1/Ramco HEF Unit 1
1  31057 31058  "1 "    0     # line from  LP_FLKBD  60.00   (2) to (1)   JANS CRK  60.00
1  31057 31066  "1 "    0     # line from  LP_FLKBD  60.00   (2) to (3)   ARCTAJT1  60.00
1  31066 31072  "1 "    0     # line from  ARCTAJT1  60.00   (3) to BRKR  ARCATA    60.00
1  31066 31080  "1 "    0     # line from  ARCTAJT1  60.00   (3) to BRKR  HUMBOLDT  60.00
4  31057     0  "1 "    0     # LOAD-DROP    LP_FLKBD  60.00  LOAD==4.78(2.96)
4  31058     0  "1 "    0     # LOAD-DROP    JANS CRK  60.00  LOAD==3.54(0.72)
4  31058     0  "2 "    0     # LOAD-DROP    JANS CRK  60.00  LOAD==8.79(1.78)
1 31058 31056 "1"  1             #Line Transfer JANS CRK 60kV TO JANCK TP 60kV
4 31058     0 "**" 1             #Restore load at Janes Creek
 #
3  31154     0  "1"     0     # HUMBOLDT  13.80       PGEN=15.00  QGEN=-3.00  # pre-project
3  31180     0  "1"     0     # P0411G1   13.80       PGEN=16.64  QGEN=0.91   # post-project
0
 #
 #
 # (70)  L-/G-1 OVERLAPPING OUTAGE
 # Arcata - Fairhaven 60 kV Line and MEPPS Unit 1/Ramco HEF Unit 1
1  31070 31072  "1 "    0     # line from  ARCTAJT2  60.00   (2) to BRKR  ARCATA    60.00
1  31070 31074  "1 "    0     # line from  ARCTAJT2  60.00   (2) to BRKR  FAIRHAVN  60.00
 #
3  31154     0  "1"     0     # HUMBOLDT  13.80       PGEN=15.00  QGEN=-3.00  # pre-project
3  31180     0  "1"     0     # P0411G1   13.80       PGEN=16.64  QGEN=0.91   # post-project
0
 #
 #
 # (71)  L-/G-1 OVERLAPPING OUTAGE
 # Humboldt - Fairhaven 60 kV Line and MEPPS Unit 1/Ramco HEF Unit 1
1  31071 31075  "1 "    0     # line from  ARCTA_J2  60.00   (2) to (2)   SIERA_PC  60.00
1  31071 31080  "1 "    0     # line from  ARCTA_J2  60.00   (2) to BRKR  HUMBOLDT  60.00
1  31075 31074  "1 "    0     # line from  SIERA_PC  60.00   (2) to BRKR  FAIRHAVN  60.00
4  31075     0  "1 "    0     # LOAD-DROP    SIERA_PC  60.00  LOAD==2.48(2.19)
 #
3  31154     0  "1"     0     # HUMBOLDT  13.80       PGEN=15.00  QGEN=-3.00  # pre-project
3  31180     0  "1"     0     # P0411G1   13.80       PGEN=16.64  QGEN=0.91   # post-project
0
 #
 #
 # (72)  L-/G-1 OVERLAPPING OUTAGE
 # Fairhaven #1 60 kV Line and MEPPS Unit 1/Ramco HEF Unit 1
1  31073 31076  "1 "    0     # line from  LP_JCT    60.00   (3) to (2)   LP-SAMOA  60.00
1  31073 31078  "1 "    0     # line from  LP_JCT    60.00   (3) to (3)   FPC       60.00
1  31073 31074  "1 "    0     # line from  LP_JCT    60.00   (3) to BRKR  FAIRHAVN  60.00
2  31076 31158  "1 "    0     # TRAN from  LP-SAMOA  60.00  BRKR to (1)   LP SAMOA  12.47
1  31078 31079  "1 "    0     # line from  FPC       60.00   (3) to (1)   SIM_PULP  60.00
2  31078 31150  "1 "    0     # TRAN from  FPC       60.00   (3) to (1)   FAIRHAVN  13.80
4  31158     0  "SG"    0     # LOAD-DROP    LP SAMOA  12.47  LOAD==10.51(6.51)
```

```
3  31158     0  "1 "    0     # GEN-DROP    LP SAMOA  12.47  GEN==12.00(11.46)
3  31150     0  "1 "    0     # GEN-DROP    FAIRHAVN  13.80  GEN==15.90(3.26)
 #
3  31154     0  "1"     0     # HUMBOLDT  13.80       PGEN=15.00  QGEN=-3.00  # pre-project
3  31180     0  "1"     0     # P0411G1   13.80       PGEN=16.64  QGEN=0.91   # post-project
0
 #
 #
 # (73)  L-/G-1 OVERLAPPING OUTAGE
 # Humboldt - Eureka 60 kV Line and MEPPS Unit 1/Ramco HEF Unit 1
1  31080 31082  "1 "    0     # line from  HUMBOLDT  60.00  BRKR to (2)   HARRIS    60.00
1  31082 31084  "1 "    0     # line from  HARRIS    60.00   (2) to (2)   HARRISST  60.00
1  31084 31086  "1 "    0     # line from  HARRISST  60.00   (2) to BRKR  EUREKA    60.00
4  31082     0  "1 "    0     # LOAD-DROP    HARRIS    60.00  LOAD==7.70(1.56)
4  31082     0  "2 "    0     # LOAD-DROP    HARRIS    60.00  LOAD==6.75(1.36)
 #
3  31154     0  "1"     0     # HUMBOLDT  13.80       PGEN=15.00  QGEN=-3.00  # pre-project
3  31180     0  "1"     0     # P0411G1   13.80       PGEN=16.64  QGEN=0.91   # post-project
0
 #
 #
 # (74)  L-/G-1 OVERLAPPING OUTAGE
 # Humboldt - Humboldt Bay #1 60 kV Line and MEPPS Unit 1/Ramco HEF Unit 1
1  31080 31088  "2 "    0     # line from  HUMBOLDT  60.00  BRKR to (2)   HMBLT JT  60.00
1  31088 31090  "2 "    0     # line from  HMBLT JT  60.00   (2) to BRKR  HMBLT BY  60.00
 #
3  31154     0  "1"     0     # HUMBOLDT  13.80       PGEN=15.00  QGEN=-3.00  # pre-project
3  31180     0  "1"     0     # P0411G1   13.80       PGEN=16.64  QGEN=0.91   # post-project
0
 #
 #
 # (75)  L-/G-1 OVERLAPPING OUTAGE
 # Humboldt - Humboldt Bay #2 60 kV Line and MEPPS Unit 1/Ramco HEF Unit 1
1  31080 31090  "1 "    0     # line from  HUMBOLDT  60.00  BRKR to BRKR  HMBLT BY  60.00
 #
3  31154     0  "1"     0     # HUMBOLDT  13.80       PGEN=15.00  QGEN=-3.00  # pre-project
3  31180     0  "1"     0     # P0411G1   13.80       PGEN=16.64  QGEN=0.91   # post-project
0
 #
 #
 # (76)  L-/G-1 OVERLAPPING OUTAGE
 # Humboldt - Maple Creek 60 kV Line and MEPPS Unit 1/Ramco HEF Unit 1
1  31080 31092  "1 "    0     # line from  HUMBOLDT  60.00  BRKR to BRKR  MPLE CRK  60.00
 #
3  31154     0  "1"     0     # HUMBOLDT  13.80       PGEN=15.00  QGEN=-3.00  # pre-project
3  31180     0  "1"     0     # P0411G1   13.80       PGEN=16.64  QGEN=0.91   # post-project
0
 #
 #
 # (77)  L-/G-1 OVERLAPPING OUTAGE
 # Humboldt Bay - Eureka 60 kV Line and MEPPS Unit 1/Ramco HEF Unit 1
1  31086 31090  "1 "    0     # line from  EUREKA    60.00  BRKR to BRKR  HMBLT BY  60.00
 #
3  31154     0  "1"     0     # HUMBOLDT  13.80       PGEN=15.00  QGEN=-3.00  # pre-project
3  31180     0  "1"     0     # P0411G1   13.80       PGEN=16.64  QGEN=0.91   # post-project
0
 #
 #
 # (78)  L-/G-1 OVERLAPPING OUTAGE
 # Eureka Station A 60 kV Line and MEPPS Unit 1/Ramco HEF Unit 1
1  31087 31086  "1 "    0     # line from  EUREKA A  60.00   (1) to BRKR  EUREKA    60.00
4  31087     0  "1 "    0     # LOAD-DROP    EUREKA A  60.00  LOAD==9.53(1.93)
 #
3  31154     0  "1"     0     # HUMBOLDT  13.80       PGEN=15.00  QGEN=-3.00  # pre-project
3  31180     0  "1"     0     # P0411G1   13.80       PGEN=16.64  QGEN=0.91   # post-project
0
 #
 #
 # (79)  L-/G-1 OVERLAPPING OUTAGE
 # Humboldt Bay - Rio Dell Junction 60 kV Line and MEPPS Unit 1/Ramco HEF Unit 1
1  31090 31100  "1 "    0     # line from  HMBLT BY  60.00  BRKR to (2)   EEL RIVR  60.00
1  31100 31102  "1 "    0     # line from  EEL RIVR  60.00   (2) to (2)   NEWBURG   60.00
1  31102 31105  "1 "    0     # line from  NEWBURG   60.00   (2) to BRKR  RIODLLTP  60.00
4  31100     0  "1 "    0     # LOAD-DROP    EEL RIVR  60.00  LOAD==9.53(1.93)
4  31102     0  "1 "    0     # LOAD-DROP    NEWBURG   60.00  LOAD==3.88(0.79)
4  31102     0  "2 "    0     # LOAD-DROP    NEWBURG   60.00  LOAD==7.64(1.55)
 #
3  31154     0  "1"     0     # HUMBOLDT  13.80       PGEN=15.00  QGEN=-3.00  # pre-project
3  31180     0  "1"     0     # P0411G1   13.80       PGEN=16.64  QGEN=0.91   # post-project
```

```
0
 #
 #
 # (80)  L-/G-1 OVERLAPPING OUTAGE
 # Trinity - Maple Creek 60 kV Line and MEPPS Unit 1/Ramco HEF Unit 1
1  31091 31093  "1 "    0     # line from  RDGE CBN  60.00   (2) to (3)   HYMPOMJT  60.00
1  31091 31092  "1 "    0     # line from  RDGE CBN  60.00   (2) to BRKR  MPLE CRK  60.00
1  31093 31554  "1 "    0     # line from  HYMPOMJT  60.00   (3) to (2)   GROUSCRK  60.00
1  31093 31556  "1 "    0     # line from  HYMPOMJT  60.00   (3) to BRKR  TRINITY   60.00
2  31554 31850  "1 "    0     # TRAN from  GROUSCRK  60.00  BRKR to (1)   CEDR FL+   9.11
4  31554     0  "1 "    0     # LOAD-DROP    GROUSCRK  60.00  LOAD==0.94(0.21)
4  31554     0  "2 "    0     # LOAD-DROP    GROUSCRK  60.00  LOAD==0.12(0.03)
4  31554     0  "3 "    0     # LOAD-DROP    GROUSCRK  60.00  LOAD==0.30(0.07)
2  31554 31850  "1"     0     #Transformer gets dropped
4  31554     0  "**"    0     #Load gets dropped at GROUSCRK
 #
3  31154     0  "1"     0     # HUMBOLDT  13.80       PGEN=15.00  QGEN=-3.00  # pre-project
3  31180     0  "1"     0     # P0411G1   13.80       PGEN=16.64  QGEN=0.91   # post-project
0
 #
 #
 # (81)  L-/G-1 OVERLAPPING OUTAGE
 # Maple Creek - Hoopa 60 kV Line and MEPPS Unit 1/Ramco HEF Unit 1
1  31092 31094  "1 "    0     # line from  MPLE CRK  60.00  BRKR to (2)   RUSS RCH  60.00
1  31094 31096  "1 "    0     # line from  RUSS RCH  60.00   (2) to (2)   WILLWCRK  60.00
1  31096 31098  "1 "    0     # line from  WILLWCRK  60.00   (2) to (1)   HOOPA     60.00
4  31096     0  "1 "    0     # LOAD-DROP    WILLWCRK  60.00  LOAD==4.94(1.01)
4  31098     0  "1 "    0     # LOAD-DROP    HOOPA     60.00  LOAD==4.02(0.82)
 #
3  31154     0  "1"     0     # HUMBOLDT  13.80       PGEN=15.00  QGEN=-3.00  # pre-project
3  31180     0  "1"     0     # P0411G1   13.80       PGEN=16.64  QGEN=0.91   # post-project
0
 #
 #
 # (82)  L-/G-1 OVERLAPPING OUTAGE
 # Rio Dell 60 kV Tap Line and MEPPS Unit 1/Ramco HEF Unit 1
1  31101 31105  "1 "    0     # line from  SCOTIATP  60.00   (3) to (3)   RIODLLTP  60.00
1  31101 31106  "1 "    0     # line from  SCOTIATP  60.00   (3) to BRKR  RIO DELL  60.00
1  31101 31109  "1 "    0     # line from  SCOTIATP  60.00   (3) to (2)   SCTIATP2  60.00
1  31105 31102  "1 "    0     # line from  RIODLLTP  60.00  BRKR to (1)   NEWBURG   60.00
1  31105 31104  "1 "    0     # line from  RIODLLTP  60.00  BRKR to (1)   CARLOTTA  60.00
2  31109 31152  "1 "    0     # TRAN from  SCTIATP2  60.00   (2) to (1)   PAC.LUMB  13.80
4  31106     0  "1 "    0     # LOAD-DROP    RIO DELL  60.00  LOAD==4.54(0.93)
4  31152     0  "SG"    0     # LOAD-DROP    PAC.LUMB  13.80  LOAD==0.35(0.07)
3  31152     0  "1 "    0     # GEN-DROP    PAC.LUMB  13.80  GEN==10.00(0.54)
3  31152     0  "2 "    0     # GEN-DROP    PAC.LUMB  13.80  GEN==10.00(0.54)
 #
3  31154     0  "1"     0     # HUMBOLDT  13.80       PGEN=15.00  QGEN=-3.00  # pre-project
3  31180     0  "1"     0     # P0411G1   13.80       PGEN=16.64  QGEN=0.91   # post-project
0
 #
 #
 # (83)  L-/G-1 OVERLAPPING OUTAGE
 # Rio Dell Junction - Bridgeville 60 kV Line and MEPPS Unit 1/Ramco HEF Unit 1
1  31104 31103  "1 "    0     # line from  CARLOTTA  60.00   (3) to (1)   PCLUMBER  60.00
1  31104 31105  "1 "    0     # line from  CARLOTTA  60.00   (3) to BRKR  RIODLLTP  60.00
1  31104 31108  "1 "    0     # line from  CARLOTTA  60.00   (3) to (2)   SWNS FLT  60.00
1  31108 31110  "1 "    0     # line from  SWNS FLT  60.00   (2) to BRKR  BRDGVLLE  60.00
4  31104     0  "1 "    0     # LOAD-DROP    CARLOTTA  60.00  LOAD==1.88(0.38)
4  31103     0  "1 "    0     # LOAD-DROP    PCLUMBER  60.00  LOAD==1.87(1.40)
 #
3  31154     0  "1"     0     # HUMBOLDT  13.80       PGEN=15.00  QGEN=-3.00  # pre-project
3  31180     0  "1"     0     # P0411G1   13.80       PGEN=16.64  QGEN=0.91   # post-project
0
 #
 #
 # (84)  L-/G-1 OVERLAPPING OUTAGE
 # Bridgeville - Garberville 60 kV Line and MEPPS Unit 1/Ramco HEF Unit 1
1  31110 31120  "1 "    0     # line from  BRDGVLLE  60.00  BRKR to (3)   FRUTLDJT  60.00
1  31120 31112  "1 "    0     # line from  FRUTLDJT  60.00   (3) to (1)   FRUITLND  60.00
1  31120 31122  "1 "    0     # line from  FRUTLDJT  60.00   (3) to (3)   FTSWRDJT  60.00
1  31122 31114  "1 "    0     # line from  FTSWRDJT  60.00   (3) to (1)   FRT SWRD  60.00
1  31122 31116  "1 "    0     # line from  FTSWRDJT  60.00   (3) to BRKR  GRBRVLLE  60.00
4  31112     0  "1 "    0     # LOAD-DROP    FRUITLND  60.00  LOAD==2.47(0.50)
4  31114     0  "1 "    0     # LOAD-DROP    FRT SWRD  60.00  LOAD==0.32(0.07)
 #
3  31154     0  "1"     0     # HUMBOLDT  13.80       PGEN=15.00  QGEN=-3.00  # pre-project
3  31180     0  "1"     0     # P0411G1   13.80       PGEN=16.64  QGEN=0.91   # post-project
0
```

```
 #
 #
 # (85)  L-/G-1 OVERLAPPING OUTAGE
 # Willits - Garberville 60 kV Line and MEPPS Unit 1/Ramco HEF Unit 1
1  31116 31118  "1 "    0     # line from  GRBRVLLE  60.00  BRKR to (3)   KEKAWAKA  60.00
1  31118 31308  "1 "    0     # line from  KEKAWAKA  60.00   (3) to (3)   LYTNVLLE  60.00
2  31118 31166  "1 "    0     # TRAN from  KEKAWAKA  60.00  BRKR to (1)   KEKAWAK    9.11
1  31308 31306  "1 "    0     # line from  LYTNVLLE  60.00   (3) to BRKR  WILLITS   60.00
1  31308 31310  "1 "    0     # line from  LYTNVLLE  60.00   (3) to (1)   COVELO6   60.00
4  31308     0  "1 "    0     # LOAD-DROP    LYTNVLLE  60.00  LOAD==5.39(1.09)
4  31310     0  "1 "    0     # LOAD-DROP    COVELO6   60.00  LOAD==2.49(0.50)
 #
3  31154     0  "1"     0     # HUMBOLDT  13.80       PGEN=15.00  QGEN=-3.00  # pre-project
3  31180     0  "1"     0     # P0411G1   13.80       PGEN=16.64  QGEN=0.91   # post-project
0
 #
-1
 # EOF
```

APPENDIX B – ISO CATEGORY C AUTOCON INPUT FILE

```
# Ramco HEF SIS-2
# 2008 category c contingency list
# Humboldt division
  #
  #
  # Zone 301 Humboldt division
  # 2008 category c contingency list
  #
  #
  # (1) BUS FAULT  31000  "HUMBOLDT"
  #
 1  31000  31005  "1"    0     # LINE from  HUMBOLDT 115.00  to  HMBLDT B 115.00
 1  31000  31015  "1"    0     # LINE from  HUMBOLDT 115.00  to  BRDGVLLE 115.00
 1  31000  31452  "1"    0     # LINE from  HUMBOLDT 115.00  to  TRINITY  115.00
 2  31000  31080  "2"    0     # TRAN from  HUMBOLDT 115.00  to  HUMBOLDT  60.00
 2  31000  31001  "1"    0     # TRAN from  HUMBOLDT 115.00  to  HMBLT TM 115.00
 0
  #
  #
  # (2) BUS FAULT  31005  "HMBLDT B"
  # pre and post-project outage
 1  31005  31000  "1"    0     # LINE from  HMBLDT B 115.00  to  HUMBOLDT 115.00
 1  31005  31020  "1"    0     # LINE from  HMBLDT B 115.00  to  P0411BS1 115.00
 2  31005  31154  "1"    0     # TRAN from  HMBLDT B 115.00  to  HUMBOLDT  13.20
 0
  #
  #
  # (3) BUS FAULT  31015  "BRDGVLLE"
  #
 1  31015  31000  "1"    0     # LINE from  BRDGVLLE 115.00  to  HUMBOLDT 115.00
 1  31015  31010  "1"    0     # LINE from  BRDGVLLE 115.00  to  LOW GAP1 115.00
 2  31015  31016  "1"    0     # TRAN from  BRDGVLLE 115.00  to  BRDGVL M  12.00
 0
  #
  #
  # (4) BUS FAULT  31072  "ARCATA"
  #
 1  31072  31066  "1"    0     # LINE from  ARCATA    60.00  to  ARCTAJT1  60.00
 1  31072  31070  "1"    0     # LINE from  ARCATA    60.00  to  ARCTAJT2  60.00
 4  31072     0  "1 "    0     # LOAD-DROP    ARCATA    60.00  LOAD==19.61(3.99)
 0
  #
  #
  # (5) BUS FAULT  31074  "FAIRHAVN"
  #
 1  31074  31070  "1"    0     # LINE from  FAIRHAVN  60.00  to  ARCTAJT2  60.00
 1  31074  31073  "1"    0     # LINE from  FAIRHAVN  60.00  to  LP_JCT    60.00
 1  31074  31075  "1"    0     # LINE from  FAIRHAVN  60.00  to  SIERA_PC  60.00
 4  31074     0  "1 "    0     # LOAD-DROP    FAIRHAVN  60.00  LOAD==1.55(0.32)
 0
  #
  #
  # (6) BUS FAULT  31080  "HUMBOLDT"
  #
 1  31080  31066  "1"    0     # LINE from  HUMBOLDT  60.00  to  ARCTAJT1  60.00
 1  31080  31071  "1"    0     # LINE from  HUMBOLDT  60.00  to  ARCTA_J2  60.00
 1  31080  31067  "1"    0     # LINE from  HUMBOLDT  60.00  to  ARC_JT2X  60.00
 1  31080  31082  "1"    0     # LINE from  HUMBOLDT  60.00  to  HARRIS    60.00
 1  31080  31088  "2"    0     # LINE from  HUMBOLDT  60.00  to  HMBLT JT  60.00
 1  31080  31090  "1"    0     # LINE from  HUMBOLDT  60.00  to  HMBLT BY  60.00
 1  31080  31092  "1"    0     # LINE from  HUMBOLDT  60.00  to  MPLE CRK  60.00
 2  31080  31000  "2"    0     # TRAN from  HUMBOLDT  60.00  to  HUMBOLDT 115.00
 2  31080  31001  "1"    0     # TRAN from  HUMBOLDT  60.00  to  HMBLT TM 115.00
 0
  #
  #
  # (7) BUS FAULT  31086  "EUREKA"
  #
 1  31086  31084  "1"    0     # LINE from  EUREKA    60.00  to  HARRISST  60.00
 1  31086  31090  "1"    0     # LINE from  EUREKA    60.00  to  HMBLT BY  60.00
 1  31086  31087  "1"    0     # LINE from  EUREKA    60.00  to  EUREKA A  60.00
 4  31086     0  "1 "    0     # LOAD-DROP    EUREKA    60.00  LOAD==13.59(2.76)
 0
  #
```

```
 #
 # (8) BUS FAULT  31090  "HMBLT BY"
 # pre and post-project outage
1  31090  31080  "1"    0     # LINE from  HMBLT BY  60.00  to  HUMBOLDT  60.00
1  31090  31086  "1"    0     # LINE from  HMBLT BY  60.00  to  EUREKA    60.00
1  31090  31088  "2"    0     # LINE from  HMBLT BY  60.00  to  HMBLT JT  60.00
1  31090  31100  "1"    0     # LINE from  HMBLT BY  60.00  to  EEL RIVR  60.00
1  31090  31095  "1"    0     # LINE from  HMBLT BY  60.00  to  P0411BS2  60.00
1  31090  31097  "1"    0     # LINE from  HMBLT BY  60.00  to  P0411BS3  60.00
2  31090  31170  "1"    0     # TRAN from  HMBLT BY  60.00  to  HMBOLDT1  13.80
2  31090  31172  "1"    0     # TRAN from  HMBLT BY  60.00  to  HMBOLDT2  13.80
4  31090     0  "11"    0     # LOAD-DROP    HMBLT BY  60.00  LOAD==5.91(1.20)
4  31090     0  "2 "    0     # LOAD-DROP    HMBLT BY  60.00  LOAD==2.00(1.02)
0
 #
 #
 # (9) BUS FAULT  31092  "MPLE CRK"
 #
1  31092  31080  "1"    0     # LINE from  MPLE CRK  60.00  to  HUMBOLDT  60.00
1  31092  31091  "1"    0     # LINE from  MPLE CRK  60.00  to  RDGE CBN  60.00
1  31092  31094  "1"    0     # LINE from  MPLE CRK  60.00  to  RUSS RCH  60.00
4  31092     0  "1 "    0     # LOAD-DROP    MPLE CRK  60.00  LOAD==0.50(0.10)
0
 #
 #
 # (10) BUS FAULT  31106  "RIO DELL"
 #
1  31106  31101  "1"    0     # LINE from  RIO DELL  60.00  to  SCOTIATP  60.00
4  31106     0  "1 "    0     # LOAD-DROP    RIO DELL  60.00  LOAD==4.54(0.93)
0
 #
 #
 # (11) BUS FAULT  31110  "BRDGVLLE"
 #
1  31110  31108  "1"    0     # LINE from  BRDGVLLE  60.00  to  SWNS FLT  60.00
1  31110  31120  "1"    0     # LINE from  BRDGVLLE  60.00  to  FRUTLDJT  60.00
2  31110  31016  "1"    0     # TRAN from  BRDGVLLE  60.00  to  BRDGVL M  12.00
0
 #
 #
 # (12) BUS FAULT  31116  "GRBRVLLE"
 #
1  31116  31118  "1"    0     # LINE from  GRBRVLLE  60.00  to  KEKAWAKA  60.00
1  31116  31122  "1"    0     # LINE from  GRBRVLLE  60.00  to  FTSWRDJT  60.00
4  31116     0  "1 "    0     # LOAD-DROP    GRBRVLLE  60.00  LOAD==8.49(1.72)
0
 #
 #
 # (13)  C3 DCTL OUTAGE
 # Essex - Arcata - Fairhaven and Fairhaven - Humboldt 60 kV Lines
1  31054 31056  "1 "    0     # line from  ESSX JCT  60.00   (3) to (2)   JANCK TP  60.00
1  31054 31052  "1 "    0     # line from  ESSX JCT  60.00  BRKR to (1)   TRINIDAD  60.00
1  31054 31063  "1 "    0     # line from  ESSX JCT  60.00   (3) to (3)   BCHIP_TP  60.00
1  31056 31067  "1 "    0     # line from  JANCK TP  60.00   (2) to (2)   ARC_JT2X  60.00
1  31063 31061  "1 "    0     # line from  BCHIP_TP  60.00   (3) to (1)   BCHIPMIL  60.00
1  31063 31062  "1 "    0     # line from  BCHIP_TP  60.00   (3) to (2)   BLUE LKE  60.00
1  31062 31064  "1 "    0     # line from  BLUE LKE  60.00   (2) to (3)   SMPSNTAP  60.00
1  31064 31060  "1 "    0     # line from  SMPSNTAP  60.00   (3) to (2)   ULTR_PWR  60.00
1  31064 31068  "1 "    0     # line from  SMPSNTAP  60.00   (3) to (1)   SIMPSON   60.00
2  31060 31156  "1 "    0     # TRAN from  ULTR_PWR  60.00   (2) to (1)   ULTRAPWR  12.47
1  31067 31080  "1 "    0     # line from  ARC_JT2X  60.00   (2) to BRKR  HUMBOLDT  60.00
4  31061     0  "1 "    0     # LOAD-DROP    BCHIPMIL  60.00  LOAD==1.00(0.33)
4  31062     0  "3 "    0     # LOAD-DROP    BLUE LKE  60.00  LOAD==3.65(0.74)
4  31068     0  "1 "    0     # LOAD-DROP    SIMPSON   60.00  LOAD==3.80(2.36)
 #
1  31071 31075  "1 "    0     # line from  ARCTA_J2  60.00   (2) to (2)   SIERA_PC  60.00
1  31071 31080  "1 "    0     # line from  ARCTA_J2  60.00   (2) to BRKR  HUMBOLDT  60.00
1  31075 31074  "1 "    0     # line from  SIERA_PC  60.00   (2) to BRKR  FAIRHAVN  60.00
4  31075     0  "1 "    0     # LOAD-DROP    SIERA_PC  60.00  LOAD==2.48(2.19)
0
 #
 #
 # (14)  C3 DCTL OUTAGE
 # Humboldt Bay - Humboldt 115 kV and Humboldt - Humboldt Bay #2 60 kV Lines
1  31000 31005  "1 "    0     # line from  HUMBOLDT 115.00  BRKR to BRKR  HMBLDT B 115.00
```

```
 #
1  31080 31090  "1 "    0     # line from  HUMBOLDT  60.00  BRKR to BRKR  HMBLT BY  60.00
0
 #
 #
 # (15)  L-2 OUTAGE
 # Humboldt - Humboldt Bay #1 and #2 60 kV Lines
1  31080 31088  "2 "    0     # line from  HUMBOLDT  60.00  BRKR to (2)   HMBLT JT  60.00
1  31088 31090  "2 "    0     # line from  HMBLT JT  60.00   (2) to BRKR  HMBLT BY  60.00
 #
1  31080 31090  "1 "    0     # line from  HUMBOLDT  60.00  BRKR to BRKR  HMBLT BY  60.00
0
 #
-1
 # EOF
```

Appendix C

Steady State Power Flow Results

Autocon Comparison Files

APPENDIX C - STEADY STATE POWER FLOW RESULTS
AUTCON OUTPUT FILES FOR 2008 SUMMER PEAK **NORMAL** OPERATING CONDITIONS

--------FROM BUS--------				----------TO BUS----------					---BASE---		LOADING			
Bus #	NAME	KV	AREA	Bus #	NAME	KV	AREA	ID	MW	MVAR	P.U.	FLOW	RATING	------CASE------
30005	"ROUND MT"	500	30	40687	"MALIN "	500	40	"2 "	1517	-204	0.91	1641 AMPS	1800.18 AMPS	08sumpk_pre_catb
30005	"ROUND MT"	500	30	40687	"MALIN "	500	40	"2 "	1518	-202	0.91	1643 AMPS	1800.18 AMPS	08sumpk_pst_catb
30015	"TABLE MT"	500	30	30030	"VACA-DIX"	500	30	"1 "	2069	-176	0.90	2241 AMPS	2477.99 AMPS	08sumpk_pre_catb
30015	"TABLE MT"	500	30	30030	"VACA-DIX"	500	30	"1 "	2079	-175	0.91	2253 AMPS	2477.99 AMPS	08sumpk_pst_catb
31463	"WHEELBR "	115	30	31464	"COTWDPGE"	115	30	"1 "	-88	16	0.96	424 AMPS	441.80 AMPS	08sumpk_pre_catb
31463	"WHEELBR "	115	30	31464	"COTWDPGE"	115	30	"1 "	-88	11	0.96	422 AMPS	441.80 AMPS	08sumpk_pst_catb
31468	"CASCADE "	115	30	45087	"DELTA "	115	40	"1 "	81	-26	0.99	413 AMPS	416.70 AMPS	08sumpk_pre_catb
31468	"CASCADE "	115	30	45087	"DELTA "	115	40	"1 "	82	-26	1.01	420 AMPS	416.70 AMPS	08sumpk_pst_catb

--------FROM BUS--------			----------TO BUS----------				(RATE 1)	(RATE 2)	---------OUTAGE----------			(RATE 2)		
Bus #	NAME	KV AREA	Bus #	NAME	KV AREA	ID	BASE	OUTAGE	MW	MVAR	FLOW	RATING	FILE	OUTAGE #
31015	"BRDGVLLE"	115 30	31016	"BRDGVL M"	12 30	"1 "	0.65	0.91	32.85	1.76	32.90 MVA	36.00 MVA	08sumpk_pre_catb	41
=2=2=2=2=2=2=2=2=2=2=2=2=2=2=2=2=2=2=2=2=2=2=2=2=2=2=2=2=2=2=2=2=2=2=2=2=2=2=2=2=2=2=2=2=														
31080	"HUMBOLDT"	60 30	31082	"HARRIS "	60 30	"1 "	0.31	1.06	38.04	8.36	367.40 AMPS	346.41 AMPS	08sumpk_pre_catb	16
31080	"HUMBOLDT"	60 30	31082	"HARRIS "	60 30	"1 "	0.37	1.06	38.04	8.36	367.38 AMPS	346.41 AMPS	08sumpk_pst_catb	16
31080	"HUMBOLDT"	60 30	31082	"HARRIS "	60 30	"1 "	0.31	1.07	38.05	8.39	372.33 AMPS	346.41 AMPS	08sumpk_pre_catb	54
31080	"HUMBOLDT"	60 30	31082	"HARRIS "	60 30	"1 "	0.37	1.06	38.04	8.36	367.34 AMPS	346.41 AMPS	08sumpk_pst_catb	54
31080	"HUMBOLDT"	60 30	31082	"HARRIS "	60 30	"1 "	0.31	1.06	38.04	8.36	367.40 AMPS	346.41 AMPS	08sumpk_pre_catb	77
31080	"HUMBOLDT"	60 30	31082	"HARRIS "	60 30	"1 "	0.37	1.06	38.04	8.36	367.14 AMPS	346.41 AMPS	08sumpk_pst_catb	77
31080	"HUMBOLDT"	60 30	31088	"HMBLT JT"	60 30	"2 "	0.65	0.92	-34.85	1.64	329.06 AMPS	356.03 AMPS	08sumpk_pre_catb	14
=2=2=2=2=2=2=2=2=2=2=2=2=2=2=2=2=2=2=2=2=2=2=2=2=2=2=2=2=2=2=2=2=2=2=2=2=2=2=2=2=2=2=2=2=														
31080	"HUMBOLDT"	60 30	31088	"HMBLT JT"	60 30	"2 "	0.65	0.92	-34.85	1.64	329.06 AMPS	356.03 AMPS	08sumpk_pre_catb	75
=2=2=2=2=2=2=2=2=2=2=2=2=2=2=2=2=2=2=2=2=2=2=2=2=2=2=2=2=2=2=2=2=2=2=2=2=2=2=2=2=2=2=2=2=														
31086	"EUREKA "	60 30	31090	"HMBLT BY"	60 30	"1 "	0.86	0.94	-35.15	-1.74	331.63 AMPS	352.18 AMPS	08sumpk_pre_catb	13
=2=2=2=2=2=2=2=2=2=2=2=2=2=2=2=2=2=2=2=2=2=2=2=2=2=2=2=2=2=2=2=2=2=2=2=2=2=2=2=2=2=2=2=2=														
31086	"EUREKA "	60 30	31090	"HMBLT BY"	60 30	"1 "	0.86	1.02	-38.32	-2.10	360.83 AMPS	352.18 AMPS	08sumpk_pre_catb	14
31086	"EUREKA "	60 30	31090	"HMBLT BY"	60 30	"1 "	0.81	0.96	-35.93	-0.29	338.70 AMPS	352.18 AMPS	08sumpk_pst_catb	14
31086	"EUREKA "	60 30	31090	"HMBLT BY"	60 30	"1 "	0.86	0.94	-35.15	-1.74	331.63 AMPS	352.18 AMPS	08sumpk_pre_catb	74
=2=2=2=2=2=2=2=2=2=2=2=2=2=2=2=2=2=2=2=2=2=2=2=2=2=2=2=2=2=2=2=2=2=2=2=2=2=2=2=2=2=2=2=2=														
31086	"EUREKA "	60 30	31090	"HMBLT BY"	60 30	"1 "	0.86	1.02	-38.32	-2.10	360.83 AMPS	352.18 AMPS	08sumpk_pre_catb	75
31086	"EUREKA "	60 30	31090	"HMBLT BY"	60 30	"1 "	0.81	0.97	-36.40	-0.27	343.28 AMPS	352.18 AMPS	08sumpk_pst_catb	75

--------FROM BUS--------				----------TO BUS----------					---BASE---		LOADING			
Bus #	NAME	KV	AREA	Bus #	NAME	KV	AREA	ID	MW	MVAR	P.U.	FLOW	RATING	------CASE------
30015	"TABLE MT"	500	30	30066	"TB MT 1M"	500	30	"1 "	-1096	220	1.00**	1117 MVA	1122.00 MVA	08winpk_pre_catb
30015	"TABLE MT"	500	30	30066	"TB MT 1M"	500	30	"1 "	-1095	220	1.00**	1117 MVA	1122.00 MVA	08winpk_pst_catb
30066	"TB MT 1M"	500	30	30302	"TBL MTX1"	230	30	"1 "	1098	-82	0.98**	1101 MVA	1122.00 MVA	08winpk_pre_catb
30066	"TB MT 1M"	500	30	30302	"TBL MTX1"	230	30	"1 "	1097	-82	0.98**	1100 MVA	1122.00 MVA	08winpk_pst_catb
31636	"BURNEY "	60	30	31638	"BURNEYQF"	60	30	"1 "	-10	3	0.92**	93 AMPS	101.04 AMPS	08winpk_pre_catb
31636	"BURNEY "	60	30	31638	"BURNEYQF"	60	30	"1 "	-10	3	0.92**	93 AMPS	101.04 AMPS	08winpk_pst_catb

```
--------FROM BUS--------  ----------TO BUS-----------     (RATE 3) (RATE 4)   ---------OUTAGE------------   (RATE 4)
Bus #    NAME     KV AREA  Bus #   NAME     KV AREA ID      BASE   OUTAGE     MW      MVAR      FLOW         RATING            FILE        OUTAGE #


=1=1=1=1=1=1=1=1=1=1=1=1=1=1=1=1=1=1=1=1=1=1=1=1=1=1=1=1=1=1=1=1=1=1=1=1=1=1=1=1=1=1=1=1=1=1=1=1=1=1=1=1=
31000 "HUMBOLDT"  115 30  31001 "HMBLT TM"  115 30  "1 "    0.59    0.91     40.74    -3.48    40.89 MVA    45.00 MVA    08winpk_pst_catb  24

=1=1=1=1=1=1=1=1=1=1=1=1=1=1=1=1=1=1=1=1=1=1=1=1=1=1=1=1=1=1=1=1=1=1=1=1=1=1=1=1=1=1=1=1=1=1=1=1=1=1=1=1=
31000 "HUMBOLDT"  115 30  31001 "HMBLT TM"  115 30  "1 "    0.59    0.91     40.74    -3.48    40.89 MVA    45.00 MVA    08winpk_pst_catb  25

31000 "HUMBOLDT"  115 30  31001 "HMBLT TM"  115 30  "1 "    0.55    1.01     37.91    -1.57    37.94 MVA    37.50 MVA    08winpk_pre_catb  33
=2=2=2=2=2=2=2=2=2=2=2=2=2=2=2=2=2=2=2=2=2=2=2=2=2=2=2=2=2=2=2=2=2=2=2=2=2=2=2=2=2=2=2=2=2=2=2=2=2=2=2=2=

31000 "HUMBOLDT"  115 30  31001 "HMBLT TM"  115 30  "1 "    0.55    1.01     37.79    -0.06    37.79 MVA    37.50 MVA    08winpk_pre_catb  34
=2=2=2=2=2=2=2=2=2=2=2=2=2=2=2=2=2=2=2=2=2=2=2=2=2=2=2=2=2=2=2=2=2=2=2=2=2=2=2=2=2=2=2=2=2=2=2=2=2=2=2=2=

31000 "HUMBOLDT"  115 30  31001 "HMBLT TM"  115 30  "1 "    0.55    1.02     44.28    11.87    45.84 MVA    45.00 MVA    08winpk_pre_catb  49
=2=2=2=2=2=2=2=2=2=2=2=2=2=2=2=2=2=2=2=2=2=2=2=2=2=2=2=2=2=2=2=2=2=2=2=2=2=2=2=2=2=2=2=2=2=2=2=2=2=2=2=2=

31000 "HUMBOLDT"  115 30  31001 "HMBLT TM"  115 30  "1 "    0.55    0.95     42.62    -1.62    42.65 MVA    45.00 MVA    08winpk_pre_catb  57
=2=2=2=2=2=2=2=2=2=2=2=2=2=2=2=2=2=2=2=2=2=2=2=2=2=2=2=2=2=2=2=2=2=2=2=2=2=2=2=2=2=2=2=2=2=2=2=2=2=2=2=2=

31000 "HUMBOLDT"  115 30  31001 "HMBLT TM"  115 30  "1 "    0.55    1.04     46.24     7.59    46.86 MVA    45.00 MVA    08winpk_pre_catb  59
=2=2=2=2=2=2=2=2=2=2=2=2=2=2=2=2=2=2=2=2=2=2=2=2=2=2=2=2=2=2=2=2=2=2=2=2=2=2=2=2=2=2=2=2=2=2=2=2=2=2=2=2=

=1=1=1=1=1=1=1=1=1=1=1=1=1=1=1=1=1=1=1=1=1=1=1=1=1=1=1=1=1=1=1=1=1=1=1=1=1=1=1=1=1=1=1=1=1=1=1=1=1=1=1=1=
31000 "HUMBOLDT"  115 30  31080 "HUMBOLDT"   60 30  "2 "    0.55    0.91     37.94    15.73    41.07 MVA    45.00 MVA    08winpk_pst_catb  24

=1=1=1=1=1=1=1=1=1=1=1=1=1=1=1=1=1=1=1=1=1=1=1=1=1=1=1=1=1=1=1=1=1=1=1=1=1=1=1=1=1=1=1=1=1=1=1=1=1=1=1=1=
31000 "HUMBOLDT"  115 30  31080 "HUMBOLDT"   60 30  "2 "    0.55    0.91     37.94    15.73    41.07 MVA    45.00 MVA    08winpk_pst_catb  25

31000 "HUMBOLDT"  115 30  31080 "HUMBOLDT"   60 30  "2 "    0.46    1.06     35.20    18.13    39.60 MVA    37.50 MVA    08winpk_pre_catb  33
=2=2=2=2=2=2=2=2=2=2=2=2=2=2=2=2=2=2=2=2=2=2=2=2=2=2=2=2=2=2=2=2=2=2=2=2=2=2=2=2=2=2=2=2=2=2=2=2=2=2=2=2=

31000 "HUMBOLDT"  115 30  31080 "HUMBOLDT"   60 30  "2 "    0.46    1.01     35.23    13.73    37.81 MVA    37.50 MVA    08winpk_pre_catb  34
=2=2=2=2=2=2=2=2=2=2=2=2=2=2=2=2=2=2=2=2=2=2=2=2=2=2=2=2=2=2=2=2=2=2=2=2=2=2=2=2=2=2=2=2=2=2=2=2=2=2=2=2=

31000 "HUMBOLDT"  115 30  31080 "HUMBOLDT"   60 30  "2 "    0.46    0.93     34.17    23.92    41.71 MVA    45.00 MVA    08winpk_pre_catb  48
=2=2=2=2=2=2=2=2=2=2=2=2=2=2=2=2=2=2=2=2=2=2=2=2=2=2=2=2=2=2=2=2=2=2=2=2=2=2=2=2=2=2=2=2=2=2=2=2=2=2=2=2=

31000 "HUMBOLDT"  115 30  31080 "HUMBOLDT"   60 30  "2 "    0.46    0.96     41.40    11.90    43.08 MVA    45.00 MVA    08winpk_pre_catb  49
=2=2=2=2=2=2=2=2=2=2=2=2=2=2=2=2=2=2=2=2=2=2=2=2=2=2=2=2=2=2=2=2=2=2=2=2=2=2=2=2=2=2=2=2=2=2=2=2=2=2=2=2=

31000 "HUMBOLDT"  115 30  31080 "HUMBOLDT"   60 30  "2 "    0.46    0.96     39.50    17.12    43.05 MVA    45.00 MVA    08winpk_pre_catb  57
=2=2=2=2=2=2=2=2=2=2=2=2=2=2=2=2=2=2=2=2=2=2=2=2=2=2=2=2=2=2=2=2=2=2=2=2=2=2=2=2=2=2=2=2=2=2=2=2=2=2=2=2=

31000 "HUMBOLDT"  115 30  31080 "HUMBOLDT"   60 30  "2 "    0.46    0.98     43.33     7.90    44.04 MVA    45.00 MVA    08winpk_pre_catb  59
=2=2=2=2=2=2=2=2=2=2=2=2=2=2=2=2=2=2=2=2=2=2=2=2=2=2=2=2=2=2=2=2=2=2=2=2=2=2=2=2=2=2=2=2=2=2=2=2=2=2=2=2=

=1=1=1=1=1=1=1=1=1=1=1=1=1=1=1=1=1=1=1=1=1=1=1=1=1=1=1=1=1=1=1=1=1=1=1=1=1=1=1=1=1=1=1=1=1=1=1=1=1=1=1=1=
```

```
--------FROM BUS--------  ----------TO BUS-----------     (RATE 3) (RATE 4)   ---------OUTAGE------------   (RATE 4)
Bus #    NAME     KV AREA  Bus #   NAME     KV AREA ID      BASE   OUTAGE     MW      MVAR      FLOW         RATING            FILE        OUTAGE #

31001 "HMBLT TM"  115 30  31080 "HUMBOLDT"   60 30  "1 "    0.59    0.91     40.66    -5.22    40.99 MVA    45.00 MVA    08winpk_pst_catb  24

=1=1=1=1=1=1=1=1=1=1=1=1=1=1=1=1=1=1=1=1=1=1=1=1=1=1=1=1=1=1=1=1=1=1=1=1=1=1=1=1=1=1=1=1=1=1=1=1=1=1=
31001 "HMBLT TM"  115 30  31080 "HUMBOLDT"   60 30  "1 "    0.59    0.91     40.66    -5.22    40.99 MVA    45.00 MVA    08winpk_pst_catb  25

31001 "HMBLT TM"  115 30  31080 "HUMBOLDT"   60 30  "1 "    0.54    1.01     37.83    -3.19    37.96 MVA    37.50 MVA    08winpk_pre_catb  33
=2=2=2=2=2=2=2=2=2=2=2=2=2=2=2=2=2=2=2=2=2=2=2=2=2=2=2=2=2=2=2=2=2=2=2=2=2=2=2=2=2=2=2=2=2=2=2=2=2=2=

31001 "HMBLT TM"  115 30  31080 "HUMBOLDT"   60 30  "1 "    0.54    1.01     37.72    -1.65    37.75 MVA    37.50 MVA    08winpk_pre_catb  34
=2=2=2=2=2=2=2=2=2=2=2=2=2=2=2=2=2=2=2=2=2=2=2=2=2=2=2=2=2=2=2=2=2=2=2=2=2=2=2=2=2=2=2=2=2=2=2=2=2=2=

31001 "HMBLT TM"  115 30  31080 "HUMBOLDT"   60 30  "1 "    0.54    1.00     44.19     9.44    45.19 MVA    45.00 MVA    08winpk_pre_catb  49
=2=2=2=2=2=2=2=2=2=2=2=2=2=2=2=2=2=2=2=2=2=2=2=2=2=2=2=2=2=2=2=2=2=2=2=2=2=2=2=2=2=2=2=2=2=2=2=2=2=2=

31001 "HMBLT TM"  115 30  31080 "HUMBOLDT"   60 30  "1 "    0.54    0.95     42.54    -3.62    42.69 MVA    45.00 MVA    08winpk_pre_catb  57
=2=2=2=2=2=2=2=2=2=2=2=2=2=2=2=2=2=2=2=2=2=2=2=2=2=2=2=2=2=2=2=2=2=2=2=2=2=2=2=2=2=2=2=2=2=2=2=2=2=2=

31001 "HMBLT TM"  115 30  31080 "HUMBOLDT"   60 30  "1 "    0.54    1.03     46.15     5.19    46.44 MVA    45.00 MVA    08winpk_pre_catb  59
=2=2=2=2=2=2=2=2=2=2=2=2=2=2=2=2=2=2=2=2=2=2=2=2=2=2=2=2=2=2=2=2=2=2=2=2=2=2=2=2=2=2=2=2=2=2=2=2=2=2=

31080 "HUMBOLDT"   60 30  31082 "HARRIS  "   60 30  "1 "    0.45    1.07     49.24    11.14   475.43 AMPS  442.64 AMPS   08winpk_pre_catb  16
31080 "HUMBOLDT"   60 30  31082 "HARRIS  "   60 30  "1 "    0.48    1.08     49.24    11.14   476.01 AMPS  442.64 AMPS   08winpk_pst_catb  16

31080 "HUMBOLDT"   60 30  31082 "HARRIS  "   60 30  "1 "    0.45    1.08     49.24    11.15   476.90 AMPS  442.64 AMPS   08winpk_pre_catb  54
31080 "HUMBOLDT"   60 30  31082 "HARRIS  "   60 30  "1 "    0.48    1.08     49.24    11.14   475.99 AMPS  442.64 AMPS   08winpk_pst_catb  54

31080 "HUMBOLDT"   60 30  31082 "HARRIS  "   60 30  "1 "    0.45    1.08     49.24    11.14   476.10 AMPS  442.64 AMPS   08winpk_pre_catb  77
31080 "HUMBOLDT"   60 30  31082 "HARRIS  "   60 30  "1 "    0.48    1.08     49.24    11.14   476.23 AMPS  442.64 AMPS   08winpk_pst_catb  77
```

AUTCON OUTPUT FILES FOR 2008 SUMMER OFF PEAK **NORMAL** OPERATING CONDITIONS

FROM BUS Bus #	NAME	KV	AREA	TO BUS Bus #	NAME	KV	AREA	ID	BASE MW	BASE MVAR	LOADING P.U.	FLOW	RATING	CASE
31260	"MNDCNO M"	115	30	31300	"MENDOCNO"	60	30	"1 "	-6	-74	0.93	74 MVA	80.00 MVA	08sumop_pre_catb
=2=2=2=2=2=2=2=2=2=2=2=2=2=2=2=2=2=2=2=2=2=2=2=2=2=2=2=2=2=2=2=2=2=2=2=2=2=2=2=2=2=2=														
31636	"BURNEY "	60	30	31638	"BURNEYQF"	60	30	"1 "	-10	3	0.94**	95 AMPS	101.04 AMPS	08sumop_pre_catb
31636	"BURNEY "	60	30	31638	"BURNEYQF"	60	30	"1 "	-10	3	0.93**	94 AMPS	101.04 AMPS	08sumop_pst_catb

APPENDIX C - STEADY STATE POWER FLOW RESULTS
AUTCON OUTPUT FILES FOR **ISO CATEGORY B** 2008 SUMMER OFF PEAK OPERATING CONDITIONS

```
--------FROM BUS--------  ----------TO BUS-----------     (RATE 1)  (RATE 2)    ---------OUTAGE------------    (RATE 2)
Bus #    NAME      KV AREA  Bus #   NAME      KV AREA ID      BASE   OUTAGE      MW      MVAR       FLOW          RATING               FILE            OUTAGE #


31000 "HUMBOLDT"  115 30  31001 "HMBLT TM"  115 30  "1 "    0.61    0.92    -41.04     3.84    41.21 MVA    45.00 MVA    08sumop_pre_catb  28
=2=2=2=2=2=2=2=2=2=2=2=2=2=2=2=2=2=2=2=2=2=2=2=2=2=2=2=2=2=2=2=2=2=2=2=2=2=2=2=2=2=

31000 "HUMBOLDT"  115 30  31080 "HUMBOLDT"   60 30  "2 "    0.56    0.91     40.86     1.19    40.88 MVA    45.00 MVA    08sumop_pre_catb  27
=2=2=2=2=2=2=2=2=2=2=2=2=2=2=2=2=2=2=2=2=2=2=2=2=2=2=2=2=2=2=2=2=2=2=2=2=2=2=2=2=2=

=1=1=1=1=1=1=1=1=1=1=1=1=1=1=1=1=1=1=1=1=1=1=1=1=1=1=1=1=1=1=1=1=1=1=1=1=1=1=1=1=1=
31000 "HUMBOLDT"  115 30  31452 "TRINITY "  115 30  "1 "    0.72    0.96     68.74   -14.53   324.68 AMPS  337.88 AMPS   08sumop_pst_catb   2

=1=1=1=1=1=1=1=1=1=1=1=1=1=1=1=1=1=1=1=1=1=1=1=1=1=1=1=1=1=1=1=1=1=1=1=1=1=1=1=1=1=
31000 "HUMBOLDT"  115 30  31452 "TRINITY "  115 30  "1 "    0.72    1.09     78.19   -14.80   369.41 AMPS  337.88 AMPS   08sumop_pst_catb   4

=1=1=1=1=1=1=1=1=1=1=1=1=1=1=1=1=1=1=1=1=1=1=1=1=1=1=1=1=1=1=1=1=1=1=1=1=1=1=1=1=1=
31000 "HUMBOLDT"  115 30  31452 "TRINITY "  115 30  "1 "    0.72    0.95     67.95   -15.29   322.26 AMPS  337.88 AMPS   08sumop_pst_catb  43

=1=1=1=1=1=1=1=1=1=1=1=1=1=1=1=1=1=1=1=1=1=1=1=1=1=1=1=1=1=1=1=1=1=1=1=1=1=1=1=1=1=
31000 "HUMBOLDT"  115 30  31452 "TRINITY "  115 30  "1 "    0.72    0.95     67.36   -15.25   319.70 AMPS  337.88 AMPS   08sumop_pst_catb  66

31001 "HMBLT TM"  115 30  31080 "HUMBOLDT"   60 30  "1 "    0.63    0.94     41.23     8.84    42.17 MVA    45.00 MVA    08sumop_pre_catb  28
=2=2=2=2=2=2=2=2=2=2=2=2=2=2=2=2=2=2=2=2=2=2=2=2=2=2=2=2=2=2=2=2=2=2=2=2=2=2=2=2=2=

31080 "HUMBOLDT"   60 30  31088 "HMBLT JT"   60 30  "2 "    0.72    1.05    -39.67     3.56   372.85 AMPS  356.03 AMPS   08sumop_pre_catb  14
31080 "HUMBOLDT"   60 30  31088 "HMBLT JT"   60 30  "2 "    0.67    0.97    -36.30     4.10   344.53 AMPS  356.03 AMPS   08sumop_pst_catb  14

31080 "HUMBOLDT"   60 30  31088 "HMBLT JT"   60 30  "2 "    0.72    1.05    -39.67     3.56   372.85 AMPS  356.03 AMPS   08sumop_pre_catb  75
31080 "HUMBOLDT"   60 30  31088 "HMBLT JT"   60 30  "2 "    0.67    0.98    -36.90     4.64   350.49 AMPS  356.03 AMPS   08sumop_pst_catb  75

31086 "EUREKA  "   60 30  31090 "HMBLT BY"   60 30  "1 "    0.69    0.92    -34.88     0.65   323.41 AMPS  352.18 AMPS   08sumop_pre_catb  14
=2=2=2=2=2=2=2=2=2=2=2=2=2=2=2=2=2=2=2=2=2=2=2=2=2=2=2=2=2=2=2=2=2=2=2=2=2=2=2=2=2=

31086 "EUREKA  "   60 30  31090 "HMBLT BY"   60 30  "1 "    0.69    0.92    -34.88     0.65   323.41 AMPS  352.18 AMPS   08sumop_pre_catb  75
=2=2=2=2=2=2=2=2=2=2=2=2=2=2=2=2=2=2=2=2=2=2=2=2=2=2=2=2=2=2=2=2=2=2=2=2=2=2=2=2=2=

=1=1=1=1=1=1=1=1=1=1=1=1=1=1=1=1=1=1=1=1=1=1=1=1=1=1=1=1=1=1=1=1=1=1=1=1=1=1=1=1=1=
31104 "CARLOTTA"   60 30  31105 "RIODLLTP"   60 30  "1 "    0.45    0.95    -34.85    15.13   355.77 AMPS  375.28 AMPS   08sumop_pst_catb   2

=1=1=1=1=1=1=1=1=1=1=1=1=1=1=1=1=1=1=1=1=1=1=1=1=1=1=1=1=1=1=1=1=1=1=1=1=1=1=1=1=1=
31104 "CARLOTTA"   60 30  31108 "SWNS FLT"   60 30  "1 "    0.41    0.91     32.50   -16.45   341.07 AMPS  375.28 AMPS   08sumop_pst_catb   2

=1=1=1=1=1=1=1=1=1=1=1=1=1=1=1=1=1=1=1=1=1=1=1=1=1=1=1=1=1=1=1=1=1=1=1=1=1=1=1=1=1=
31108 "SWNS FLT"   60 30  31110 "BRDGVLLE"   60 30  "1 "    0.41    0.90     29.79   -20.63   339.51 AMPS  375.28 AMPS   08sumop_pst_catb   2
```

--------FROM BUS--------			----------TO BUS----------				(RATE 1)	(RATE 2)	---------OUTAGE----------			(RATE 2)		
Bus #	NAME	KV AREA	Bus #	NAME	KV AREA	ID	BASE	OUTAGE	MW	MVAR	FLOW	RATING	FILE	OUTAGE #
=1=1=1=1=1=1=1=1=1=1=1=1=1=1=1=1=1=1=1=1=1=1=1=1=1=1=1=1=1=1=1=1=1=1=1=1=1=1=1=1=1=1=1=1=1=1=1=1=1=1=1=1=1=														
31000	"HUMBOLDT"	115 30	31001	"HMBLT TM"	115 30	"1 "	0.25	0.93	41.39	5.18	41.71 MVA	45.00 MVA	08sumpk_pst_catc	8
31001	"HMBLT TM"	115 30	31080	"HUMBOLDT"	60 30	"1 "	0.10	0.90	-38.82	-12.25	40.71 MVA	45.00 MVA	08sumpk_pre_catc	8
31001	"HMBLT TM"	115 30	31080	"HUMBOLDT"	60 30	"1 "	0.24	0.92	41.30	3.36	41.44 MVA	45.00 MVA	08sumpk_pst_catc	8
31080	"HUMBOLDT"	60 30	31082	"HARRIS "	60 30	"1 "	0.31	0.90	-28.09	17.39	312.90 AMPS	346.41 AMPS	08sumpk_pre_catc	15
=2=2=2=2=2=2=2=2=2=2=2=2=2=2=2=2=2=2=2=2=2=2=2=2=2=2=2=2=2=2=2=2=2=2=2=2=2=2=2=2=2=2=2=2=2=2=2=2=2=2=2=2=2=														
31080	"HUMBOLDT"	60 30	31082	"HARRIS "	60 30	"1 "	0.31	1.25	38.23	8.72	434.48 AMPS	346.41 AMPS	08sumpk_pre_catc	8
31080	"HUMBOLDT"	60 30	31082	"HARRIS "	60 30	"1 "	0.37	1.06	38.04	8.36	366.77 AMPS	346.41 AMPS	08sumpk_pst_catc	8
31080	"HUMBOLDT"	60 30	31088	"HMBLT JT"	60 30	"2 "	0.65	0.92	-34.88	1.54	329.31 AMPS	356.03 AMPS	08sumpk_pre_catc	14
31080	"HUMBOLDT"	60 30	31088	"HMBLT JT"	60 30	"2 "	0.59	0.90	-33.66	4.59	320.90 AMPS	356.03 AMPS	08sumpk_pst_catc	14
31082	"HARRIS "	60 30	31084	"HARRISST"	60 30	"1 "	0.16	1.23	-42.70	14.20	426.30 AMPS	346.41 AMPS	08sumpk_pre_catc	15
31082	"HARRIS "	60 30	31084	"HARRISST"	60 30	"1 "	0.13	1.13	-37.66	17.59	392.57 AMPS	346.41 AMPS	08sumpk_pst_catc	15
31084	"HARRISST"	60 30	31086	"EUREKA "	60 30	"1 "	0.16	1.23	-43.23	13.33	426.41 AMPS	346.41 AMPS	08sumpk_pre_catc	15
31084	"HARRISST"	60 30	31086	"EUREKA "	60 30	"1 "	0.13	1.13	-38.11	16.85	392.73 AMPS	346.41 AMPS	08sumpk_pst_catc	15
31086	"EUREKA "	60 30	31090	"HMBLT BY"	60 30	"1 "	0.86	1.03	-38.34	-2.18	361.09 AMPS	352.18 AMPS	08sumpk_pre_catc	14
31086	"EUREKA "	60 30	31090	"HMBLT BY"	60 30	"1 "	0.81	1.00	-37.41	0.05	353.19 AMPS	352.18 AMPS	08sumpk_pst_catc	14
31086	"EUREKA "	60 30	31090	"HMBLT BY"	60 30	"1 "	0.86	1.79	-66.70	8.04	631.06 AMPS	352.18 AMPS	08sumpk_pre_catc	15
31086	"EUREKA "	60 30	31090	"HMBLT BY"	60 30	"1 "	0.81	1.67	-61.53	11.66	589.28 AMPS	352.18 AMPS	08sumpk_pst_catc	15
31086	"EUREKA "	60 30	31090	"HMBLT BY"	60 30	"1 "	0.86	1.03	-37.66	-7.73	362.62 AMPS	352.18 AMPS	08sumpk_pre_catc	6
31086	"EUREKA "	60 30	31090	"HMBLT BY"	60 30	"1 "	0.81	1.04	-37.66	-7.73	366.49 AMPS	352.18 AMPS	08sumpk_pst_catc	6
31090	"HMBLT BY"	60 30	31100	"EEL RIVR"	60 30	"1 "	0.31	0.98	53.01	-4.73	487.23 AMPS	498.45 AMPS	08sumpk_pre_catc	6
31090	"HMBLT BY"	60 30	31100	"EEL RIVR"	60 30	"1 "	0.38	0.95	50.52	-7.52	472.20 AMPS	498.45 AMPS	08sumpk_pst_catc	6
31104	"CARLOTTA"	60 30	31105	"RIODLLTP"	60 30	"1 "	0.24	1.17	-43.13	16.56	439.07 AMPS	375.28 AMPS	08sumpk_pre_catc	6
31104	"CARLOTTA"	60 30	31105	"RIODLLTP"	60 30	"1 "	0.37	1.14	-40.85	19.17	427.46 AMPS	375.28 AMPS	08sumpk_pst_catc	6
31104	"CARLOTTA"	60 30	31108	"SWNS FLT"	60 30	"1 "	0.19	1.10	39.38	-18.34	412.83 AMPS	375.28 AMPS	08sumpk_pre_catc	6
31104	"CARLOTTA"	60 30	31108	"SWNS FLT"	60 30	"1 "	0.32	1.08	37.10	-20.95	403.58 AMPS	375.28 AMPS	08sumpk_pst_catc	6
31108	"SWNS FLT"	60 30	31110	"BRDGVLLE"	60 30	"1 "	0.18	1.10	35.42	-24.64	411.34 AMPS	375.28 AMPS	08sumpk_pre_catc	6
31108	"SWNS FLT"	60 30	31110	"BRDGVLLE"	60 30	"1 "	0.31	1.07	33.31	-26.94	401.88 AMPS	375.28 AMPS	08sumpk_pst_catc	6

APPENDIX C - STEADY STATE POWER FLOW RESULTS
AUTCON OUTPUT FILES FOR **ISO CATEGORY C** 2008 WINTER PEAK OPERATING CONDITIONS

--------FROM BUS--------			----------TO BUS----------					(RATE 3)	(RATE 4)	---------OUTAGE----------			(RATE 4)		
Bus #	NAME	KV AREA	Bus #	NAME	KV AREA	ID		BASE	OUTAGE	MW	MVAR	FLOW	RATING	FILE	OUTAGE #
31000	"HUMBOLDT"	115 30	31001	"HMBLT TM"	115 30	"1 "		0.55	1.18	52.85	3.15	52.94 MVA	45.00 MVA	08winpk_pre_catc	8
31000	"HUMBOLDT"	115 30	31001	"HMBLT TM"	115 30	"1 "		0.59	1.22	53.85	10.68	54.90 MVA	45.00 MVA	08winpk_pst_catc	8
31000	"HUMBOLDT"	115 30	31080	"HUMBOLDT"	60 30	"2 "		0.46	1.11	48.74	10.52	49.86 MVA	45.00 MVA	08winpk_pre_catc	8
31000	"HUMBOLDT"	115 30	31080	"HUMBOLDT"	60 30	"2 "		0.55	1.18	50.13	17.17	52.99 MVA	45.00 MVA	08winpk_pst_catc	8
31001	"HMBLT TM"	115 30	31080	"HUMBOLDT"	60 30	"1 "		0.54	1.24	52.65	18.67	55.86 MVA	45.00 MVA	08winpk_pre_catc	8
31001	"HMBLT TM"	115 30	31080	"HUMBOLDT"	60 30	"1 "		0.59	1.21	53.74	7.71	54.29 MVA	45.00 MVA	08winpk_pst_catc	8
31015	"BRDGVLLE"	115 30	31016	"BRDGVL M"	12 30	"1 "		0.56	1.04	37.60	-0.63	37.61 MVA	36.00 MVA	08winpk_pre_catc	1
31015	"BRDGVLLE"	115 30	31016	"BRDGVL M"	12 30	"1 "		0.60	1.10	39.37	-3.06	39.49 MVA	36.00 MVA	08winpk_pst_catc	1
31016	"BRDGVL M"	12 30	31110	"BRDGVLLE"	60 30	"1 "		0.52	1.01	36.20	-2.45	36.28 MVA	36.00 MVA	08winpk_pre_catc	1
31016	"BRDGVL M"	12 30	31110	"BRDGVLLE"	60 30	"1 "		0.55	1.06	37.96	-5.00	38.29 MVA	36.00 MVA	08winpk_pst_catc	1
31080	"HUMBOLDT"	60 30	31082	"HARRIS "	60 30	"1 "		0.45	1.24	49.51	11.63	549.21 AMPS	442.64 AMPS	08winpk_pre_catc	8
31080	"HUMBOLDT"	60 30	31082	"HARRIS "	60 30	"1 "		0.48	1.07	49.24	11.14	475.42 AMPS	442.64 AMPS	08winpk_pst_catc	8
31086	"EUREKA "	60 30	31090	"HMBLT BY"	60 30	"1 "		0.68	1.38	-64.68	7.21	612.41 AMPS	442.64 AMPS	08winpk_pre_catc	15
31086	"EUREKA "	60 30	31090	"HMBLT BY"	60 30	"1 "		0.67	1.32	-60.82	9.85	582.42 AMPS	442.64 AMPS	08winpk_pst_catc	15
31086	"EUREKA "	60 30	31090	"HMBLT BY"	60 30	"1 "		0.68	1.07	-48.61	-10.06	475.22 AMPS	442.64 AMPS	08winpk_pre_catc	6
31086	"EUREKA "	60 30	31090	"HMBLT BY"	60 30	"1 "		0.67	1.09	-48.62	-10.07	480.44 AMPS	442.64 AMPS	08winpk_pst_catc	6

--------FROM BUS--------			----------TO BUS----------				(RATE 3)	(RATE 4)	---------OUTAGE----------			(RATE 4)		
Bus #	NAME	KV AREA	Bus #	NAME	KV AREA	ID	BASE	OUTAGE	MW	MVAR	FLOW	RATING	FILE	OUTAGE #
=1=1=1=1=1=1=1=1=1=1=1=1=1=1=1=1=1=1=1=1=1=1=1=1=1=1=1=1=1=1=1=1=1=1=1=1=1=1=1=1=1=1=1=														
31000	"HUMBOLDT"	115 30	31452	"TRINITY "	115 30	"1 "	0.72	1.14	81.51	-14.62	384.16 AMPS	337.88 AMPS	08sumop_pst_catc	3
31015	"BRDGVLLE"	115 30	31016	"BRDGVL M"	12 30	"1 "	0.18	1.65	-40.22	43.92	59.56 MVA	36.00 MVA	08sumop_pre_catc	6
31015	"BRDGVLLE"	115 30	31016	"BRDGVL M"	12 30	"1 "	0.19	1.55	-33.54	44.70	55.89 MVA	36.00 MVA	08sumop_pst_catc	6
31016	"BRDGVL M"	12 30	31110	"BRDGVLLE"	60 30	"1 "	0.18	1.59	-40.86	40.00	57.18 MVA	36.00 MVA	08sumop_pre_catc	6
31016	"BRDGVL M"	12 30	31110	"BRDGVLLE"	60 30	"1 "	0.18	1.49	-34.15	41.36	53.64 MVA	36.00 MVA	08sumop_pst_catc	6
31080	"HUMBOLDT"	60 30	31082	"HARRIS "	60 30	"1 "	0.22	1.41	-48.80	17.72	489.76 AMPS	346.41 AMPS	08sumop_pre_catc	15
31080	"HUMBOLDT"	60 30	31082	"HARRIS "	60 30	"1 "	0.18	1.31	-43.62	20.65	454.95 AMPS	346.41 AMPS	08sumop_pst_catc	15
31080	"HUMBOLDT"	60 30	31088	"HMBLT JT"	60 30	"2 "	0.72	1.05	-39.67	3.42	372.87 AMPS	356.03 AMPS	08sumop_pre_catc	14
31080	"HUMBOLDT"	60 30	31088	"HMBLT JT"	60 30	"2 "	0.67	1.03	-38.57	6.44	367.73 AMPS	356.03 AMPS	08sumop_pst_catc	14
31082	"HARRIS "	60 30	31084	"HARRISST"	60 30	"1 "	0.39	1.57	-55.52	15.77	542.96 AMPS	346.41 AMPS	08sumop_pre_catc	15
31082	"HARRIS "	60 30	31084	"HARRISST"	60 30	"1 "	0.35	1.46	-50.29	18.80	505.45 AMPS	346.41 AMPS	08sumop_pst_catc	15
31084	"HARRISST"	60 30	31086	"EUREKA "	60 30	"1 "	0.39	1.57	-56.37	14.33	543.06 AMPS	346.41 AMPS	08sumop_pre_catc	15
31084	"HARRISST"	60 30	31086	"EUREKA "	60 30	"1 "	0.35	1.46	-51.02	17.55	505.57 AMPS	346.41 AMPS	08sumop_pst_catc	15
31086	"EUREKA "	60 30	31090	"HMBLT BY"	60 30	"1 "	0.69	0.92	-34.88	0.54	323.49 AMPS	352.18 AMPS	08sumop_pre_catc	14
31086	"EUREKA "	60 30	31090	"HMBLT BY"	60 30	"1 "	0.65	0.91	-34.05	2.76	318.93 AMPS	352.18 AMPS	08sumop_pst_catc	14
31086	"EUREKA "	60 30	31090	"HMBLT BY"	60 30	"1 "	0.69	1.79	-67.07	11.29	631.55 AMPS	352.18 AMPS	08sumop_pre_catc	15
31086	"EUREKA "	60 30	31090	"HMBLT BY"	60 30	"1 "	0.65	1.68	-61.64	14.65	591.53 AMPS	352.18 AMPS	08sumop_pst_catc	15
31090	"HMBLT BY"	60 30	31100	"EEL RIVR"	60 30	"1 "	0.26	1.37	74.74	-5.71	681.84 AMPS	498.45 AMPS	08sumop_pre_catc	6
31090	"HMBLT BY"	60 30	31100	"EEL RIVR"	60 30	"1 "	0.35	1.34	72.26	-9.18	670.36 AMPS	498.45 AMPS	08sumop_pst_catc	6
31100	"EEL RIVR"	60 30	31102	"NEWBURG "	60 30	"1 "	0.18	1.29	66.44	-15.56	644.90 AMPS	498.45 AMPS	08sumop_pre_catc	6
31100	"EEL RIVR"	60 30	31102	"NEWBURG "	60 30	"1 "	0.28	1.27	64.09	-18.72	634.04 AMPS	498.45 AMPS	08sumop_pst_catc	6
31102	"NEWBURG "	60 30	31105	"RIODLLTP"	60 30	"1 "	0.12	1.60	59.95	-20.13	601.99 AMPS	375.28 AMPS	08sumop_pre_catc	6
31102	"NEWBURG "	60 30	31105	"RIODLLTP"	60 30	"1 "	0.27	1.58	57.66	-23.17	592.42 AMPS	375.28 AMPS	08sumop_pst_catc	6
31104	"CARLOTTA"	60 30	31105	"RIODLLTP"	60 30	"1 "	0.33	0.93	-35.36	13.52	349.85 AMPS	375.28 AMPS	08sumop_pre_catc	1
31104	"CARLOTTA"	60 30	31105	"RIODLLTP"	60 30	"1 "	0.45	0.91	-33.95	14.03	342.01 AMPS	375.28 AMPS	08sumop_pst_catc	1
31104	"CARLOTTA"	60 30	31105	"RIODLLTP"	60 30	"1 "	0.33	1.75	-64.62	20.22	657.24 AMPS	375.28 AMPS	08sumop_pre_catc	6
31104	"CARLOTTA"	60 30	31105	"RIODLLTP"	60 30	"1 "	0.45	1.72	-62.42	23.37	644.78 AMPS	375.28 AMPS	08sumop_pst_catc	6
31104	"CARLOTTA"	60 30	31108	"SWNS FLT"	60 30	"1 "	0.28	1.70	62.26	-21.53	639.54 AMPS	375.28 AMPS	08sumop_pre_catc	6
31104	"CARLOTTA"	60 30	31108	"SWNS FLT"	60 30	"1 "	0.41	1.67	60.07	-24.68	628.25 AMPS	375.28 AMPS	08sumop_pst_catc	6

--------FROM BUS--------			----------TO BUS----------				(RATE 3)	(RATE 4)	---------OUTAGE----------			(RATE 4)		
Bus #	NAME	KV AREA	Bus #	NAME	KV AREA	ID	BASE	OUTAGE	MW	MVAR	FLOW	RATING	FILE	OUTAGE #
31108	"SWNS FLT"	60 30	31110	"BRDGVLLE"	60 30	"1 "	0.28	1.70	52.74	-37.13	638.23 AMPS	375.28 AMPS	08sumop_pre_catc	6
31108	"SWNS FLT"	60 30	31110	"BRDGVLLE"	60 30	"1 "	0.41	1.67	50.88	-39.72	626.78 AMPS	375.28 AMPS	08sumop_pst_catc	6

Appendix D

Steady State Power Flow Plots

Ramco Humboldt Energy Facility SIS-2 Power Flow Plots

Plot	Description
Plot #1	2008 Summer Peak Normal Conditions – Pre-Project (MW/MVAr)
Plot #2	2008 Summer Peak Normal Conditions – Pre-Project (Amps/% Rate)
Plot #3	2008 Summer Peak Normal Conditions – Post-Project (MW/MVAr)
Plot #4	2008 Summer Peak Normal Conditions – Post-Project (Amps/% Rate)
Plot #5	2008 Winter Peak Normal Conditions – Pre-Project (MW/MVAr)
Plot #6	2008 Winter Peak Normal Conditions – Pre-Project (Amps/% Rate)
Plot #7	2008 Winter Peak Normal Conditions – Post-Project (MW/MVAr)
Plot #8	2008 Winter Peak Normal Conditions – Post-Project (Amps/% Rate)
Plot #9	2008 Summer Off Peak Normal Conditions – Pre-Project (MW/MVAr)
Plot #10	2008 Summer Off Peak Normal Conditions – Pre-Project (Amps/% Rate)
Plot #11	2008 Summer Off Peak Normal Conditions – Post-Project (MW/MVAr)
Plot #12	2008 Summer Off Peak Normal Conditions – Post-Project (Amps/% Rate)
Plot #13	2008 Summer Peak Pre-Project: Bridgeville – Cottonwood 115 kV Line Outage (MW/MVAr)
Plot #14	2008 Summer Peak Pre-Project: Bridgeville – Cottonwood 115 kV Line Outage (Amps/% Rate)
Plot #15	2008 Summer Peak Post-Project: Bridgeville – Cottonwood 115 kV Line Outage (MW/MVAr)
Plot #16	2008 Summer Peak Post-Project: Bridgeville – Cottonwood 115 kV Line Outage (Amps/% Rate)
Plot #17	2008 Winter Peak Pre-Project: Bridgeville – Cottonwood 115 kV Line Outage (MW/MVAr)
Plot #18	2008 Winter Peak Pre-Project: Bridgeville – Cottonwood 115 kV Line Outage (Amps/% Rate)
Plot #19	2008 Winter Peak Post-Project: Bridgeville – Cottonwood 115 kV Line Outage (MW/MVAr)
Plot #20	2008 Winter Peak Post-Project: Bridgeville – Cottonwood 115 kV Line Outage (Amps/% Rate)
Plot #21	2008 Summer Off Peak Pre-Project: Bridgeville – Cottonwood 115 kV Line Outage (MW/MVAr)
Plot #22	2008 Summer Off Peak Pre-Project: Bridgeville – Cottonwood 115 kV Line Outage (Amps/% Rate)
Plot #23	2008 Summer Off Peak Post-Project: Bridgeville – Cottonwood 115 kV Line Outage (MW/MVAr)
Plot #24	2008 Summer Off Peak Post-Project: Bridgeville – Cottonwood 115 kV Line Outage (Amps/% Rate)
Plot #25	2008 Summer Peak Pre-Project: Humboldt – Humboldt Bay #2 60 kV Line Outage (MW/MVAr)
Plot #26	2008 Summer Peak Pre-Project: Humboldt – Humboldt Bay #2 60 kV Line Outage (Amps/% Rate)

Plot	Description
Plot #27	2008 Summer Peak Post-Project: Humboldt – Humboldt Bay #2 60 kV Line Outage (MW/MVAr)
Plot #28	2008 Summer Peak Post-Project: Humboldt – Humboldt Bay #2 60 kV Line Outage (Amps/% Rate)
Plot #29	2008 Winter Peak Pre-Project: Humboldt – Humboldt Bay #2 60 kV Line Outage (MW/MVAr)
Plot #30	2008 Winter Peak Pre-Project: Humboldt – Humboldt Bay #2 60 kV Line Outage (Amps/% Rate)
Plot #31	2008 Winter Peak Post-Project: Humboldt – Humboldt Bay #2 60 kV Line Outage (MW/MVAr)
Plot #32	2008 Winter Peak Post-Project: Humboldt – Humboldt Bay #2 60 kV Line Outage (Amps/% Rate)
Plot #33	2008 Summer Off Peak Pre-Project: Humboldt – Humboldt Bay #2 60 kV Line Outage (MW/MVAr)
Plot #34	2008 Summer Off Peak Pre-Project: Humboldt – Humboldt Bay #2 60 kV Line Outage (Amps/% Rate)
Plot #35	2008 Summer Off Peak Post-Project: Humboldt – Humboldt Bay #2 60 kV Line Outage (MW/MVAr)
Plot #36	2008 Summer Off Peak Post-Project: Humboldt – Humboldt Bay #2 60 kV Line Outage (Amps/% Rate)
Plot #37	2008 Summer Peak Normal Conditions – Post-Project – Mitigation 1 (MW/MVAr)
Plot #38	2008 Summer Peak Normal Conditions – Post-Project – Mitigation 1 (Amps/% Rate)
Plot #39	2008 Winter Peak Normal Conditions – Post-Project – Mitigation 1 (MW/MVAr)
Plot #40	2008 Winter Peak Normal Conditions – Post-Project – Mitigation 1 (Amps/% Rate)
Plot #41	2008 Summer Off Peak Normal Conditions – Post-Project – Mitigation 1 (MW/MVAr)
Plot #42	2008 Summer Off Peak Normal Conditions – Post-Project – Mitigation 1 (Amps/% Rate)
Plot #43	2008 Summer Peak Post-Project Mitigation 1: Bridgeville – Cottonwood 115 kV Line Outage (MW/MVAr)
Plot #44	2008 Summer Peak Post-Project Mitigation 1: Bridgeville – Cottonwood 115 kV Line Outage (Amps/% Rate)
Plot #45	2008 Winter Peak Post-Project Mitigation 1: Bridgeville – Cottonwood 115 kV Line Outage (MW/MVAr)
Plot #46	2008 Winter Peak Post-Project Mitigation 1: Bridgeville – Cottonwood 115 kV Line Outage (Amps/% Rate)
Plot #47	2008 Summer Off Peak Post-Project Mitigation 1: Bridgeville – Cottonwood 115 kV Line Outage (MW/MVAr)
Plot #48	2008 Summer Off Peak Post-Project Mitigation 1: Bridgeville – Cottonwood 115 kV Line Outage (Amps/% Rate)
Plot #49	2008 Summer Peak Post-Project Mitigation 1: Humboldt – Humboldt Bay #2 60 kV Line Outage (MW/MVAr)
Plot #50	2008 Summer Peak Post-Project Mitigation 1: Humboldt – Humboldt Bay #2 60 kV Line Outage (Amps/% Rate)
Plot #51	2008 Winter Peak Post-Project Mitigation 1: Humboldt – Humboldt Bay #2 60 kV Line Outage (MW/MVAr)
Plot #52	2008 Winter Peak Post-Project Mitigation 1: Humboldt – Humboldt Bay #2 60 kV Line Outage (Amps/% Rate)
Plot #53	2008 Summer Off Peak Post-Project Mitigation 1: Humboldt – Humboldt Bay #2 60 kV Line Outage (MW/MVAr)
Plot #54	2008 Summer Off Peak Post-Project Mitigation 1: Humboldt – Humboldt Bay #2 60 kV Line Outage (Amps/% Rate)
Plot #55	2008 Summer Peak Normal Conditions – Post-Project – Mitigation 2 (MW/MVAr)

Plot	Description
Plot #56	2008 Summer Peak Normal Conditions – Post-Project – Mitigation 2 (Amps/% Rate)
Plot #57	2008 Winter Peak Normal Conditions – Post-Project – Mitigation 2 (MW/MVAr)
Plot #58	2008 Winter Peak Normal Conditions – Post-Project – Mitigation 2 (Amps/% Rate)
Plot #59	2008 Summer Off Peak Normal Conditions – Post-Project – Mitigation 2 (MW/MVAr)
Plot #60	2008 Summer Off Peak Normal Conditions – Post-Project – Mitigation 2 (Amps/% Rate)
Plot #61	2008 Summer Peak Post-Project Mitigation 2: Bridgeville – Cottonwood 115 kV Line Outage (MW/MVAr)
Plot #62	2008 Summer Peak Post-Project Mitigation 2: Bridgeville – Cottonwood 115 kV Line Outage (Amps/% Rate)
Plot #63	2008 Winter Peak Post-Project Mitigation 2: Bridgeville – Cottonwood 115 kV Line Outage (MW/MVAr)
Plot #64	2008 Winter Peak Post-Project Mitigation 2: Bridgeville – Cottonwood 115 kV Line Outage (Amps/% Rate)
Plot #65	2008 Summer Off Peak Post-Project Mitigation 2: Bridgeville – Cottonwood 115 kV Line Outage (MW/MVAr)
Plot #66	2008 Summer Off Peak Post-Project Mitigation 2: Bridgeville – Cottonwood 115 kV Line Outage (Amps/% Rate)
Plot #67	2008 Summer Peak Post-Project Mitigation 2: Humboldt – Humboldt Bay #2 60 kV Line Outage (MW/MVAr)
Plot #68	2008 Summer Peak Post-Project Mitigation 2: Humboldt – Humboldt Bay #2 60 kV Line Outage (Amps/% Rate)
Plot #69	2008 Winter Peak Post-Project Mitigation 2: Humboldt – Humboldt Bay #2 60 kV Line Outage (MW/MVAr)
Plot #70	2008 Winter Peak Post-Project Mitigation 2: Humboldt – Humboldt Bay #2 60 kV Line Outage (Amps/% Rate)
Plot #71	2008 Summer Off Peak Post-Project Mitigation 2: Humboldt – Humboldt Bay #2 60 kV Line Outage (MW/MVAr)
Plot #72	2008 Summer Off Peak Post-Project Mitigation 2: Humboldt – Humboldt Bay #2 60 kV Line Outage (Amps/% Rate)

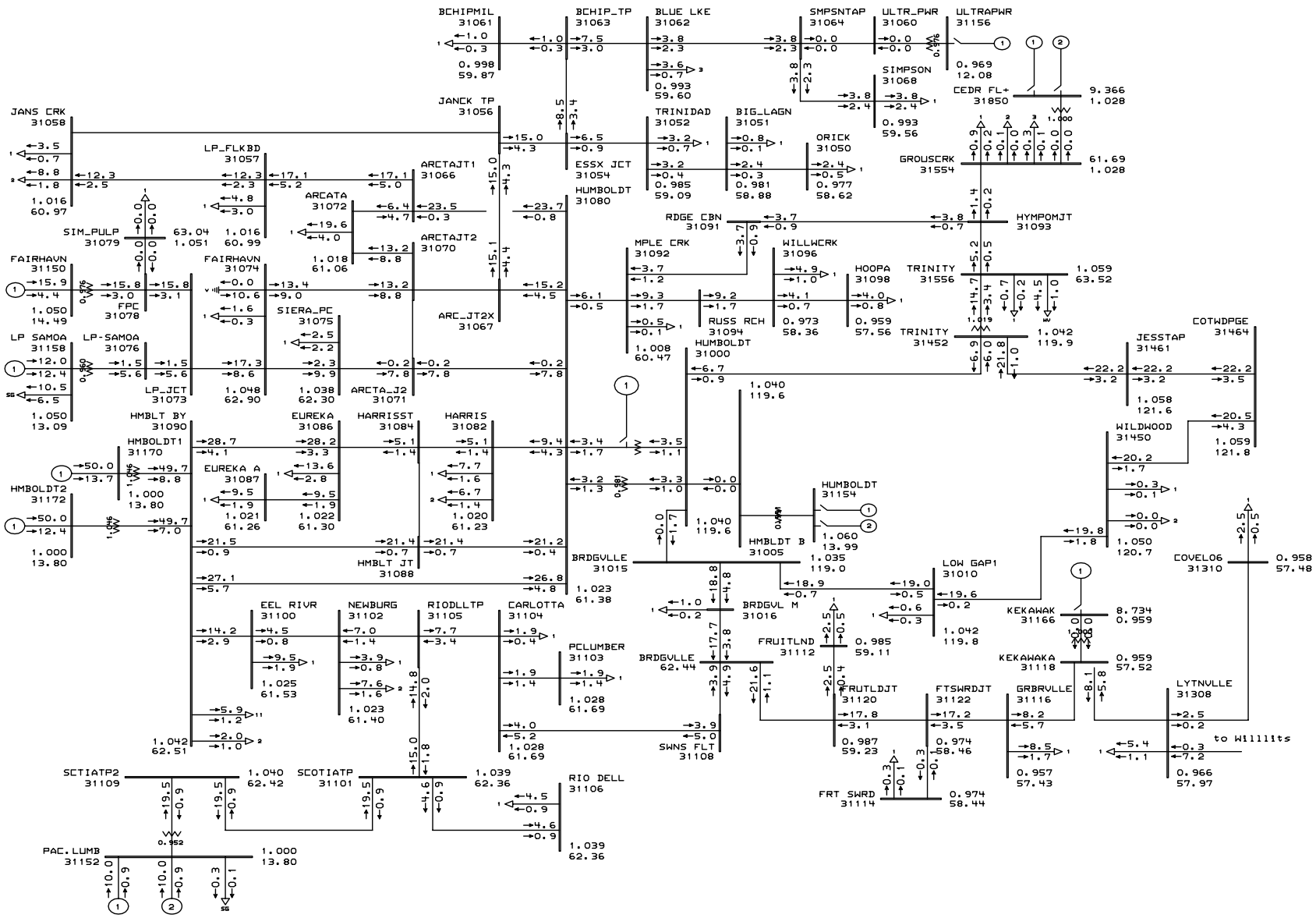

General Electric International, Inc. PSLF Program MW/MVAR Mon Dec 12 06:51:31 2005

PG&E Tranmission Planning	PG&E 2004 BASE CASE SERIES - 2008 Humboldt Summer Peak Case Pre-Project PATH15=-1616MW(S-N) PATH26=3335MW(N-S) PDCI=3104MW(N-S) COI=4738MW(N-S) RAMCO Humboldt Energy Facility SIS-2 Pre-project	Plot 01 - 2008 Summer Peak Normal Conditions - Pre-Project	C:\pslf\pge\ramcohef2\draw\ram C:\pslf\pge\ramcohef2\cases\su Rating = 1

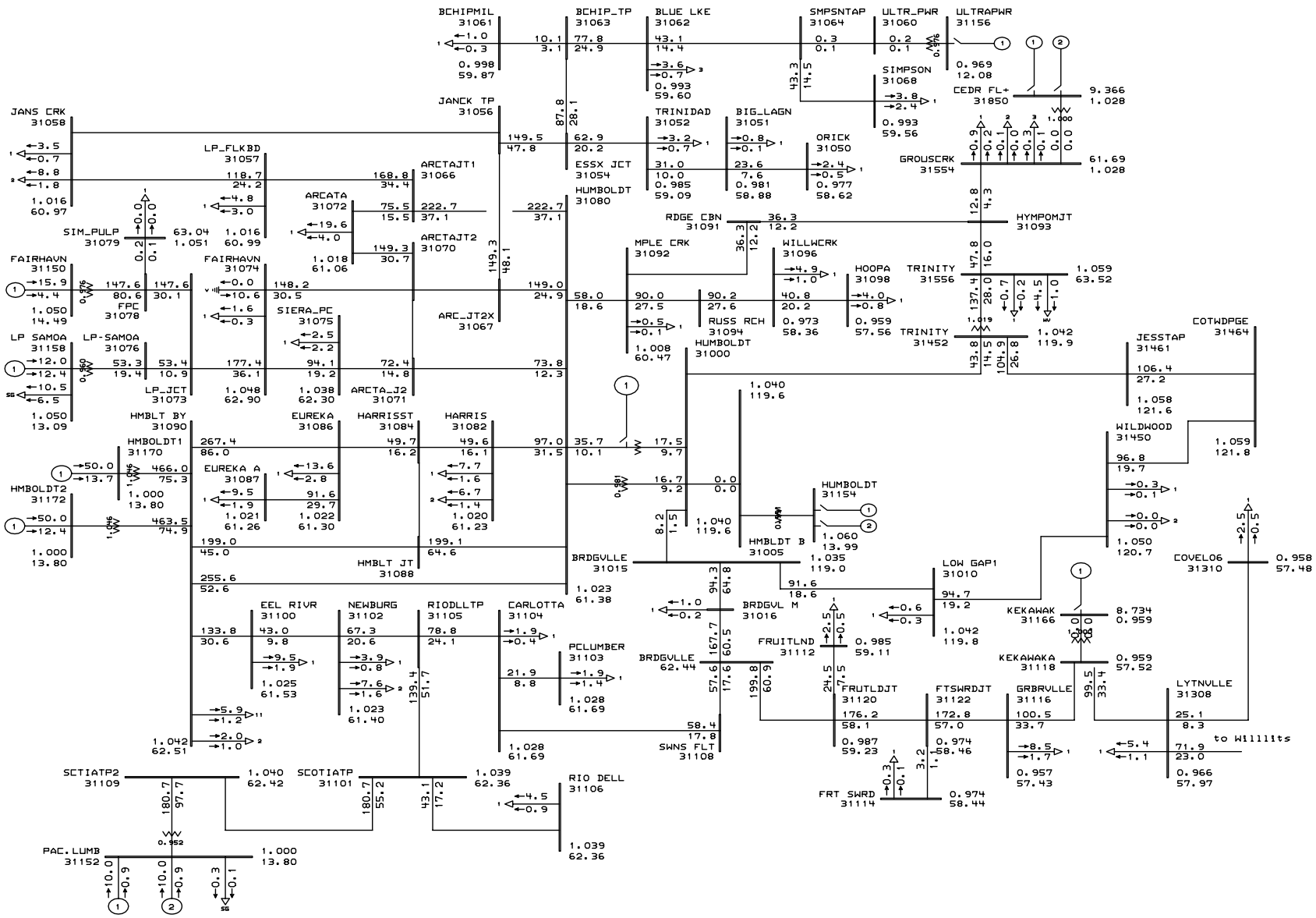

General Electric International, Inc. PSLF Program AMPS/Pct Mon Dec 12 06:51:32 2005

PG&E Tranmission Planning	PG&E 2004 BASE CASE SERIES - 2008 Humboldt Summer Peak Case Pre-Project PATH15=-1616MW(S-N) PATH26=3335MW(N-S) PDCI=3104MW(N-S) COI=4738MW(N-S) RAMCO Humboldt Energy Facility SIS-2 Pre-project	Plot 02 - 2008 Summer Peak Normal Conditions - Pre-Project	C:\pslf\pge\ramcohef2\draw\ram C:\pslf\pge\ramcohef2\cases\su Rating = 1

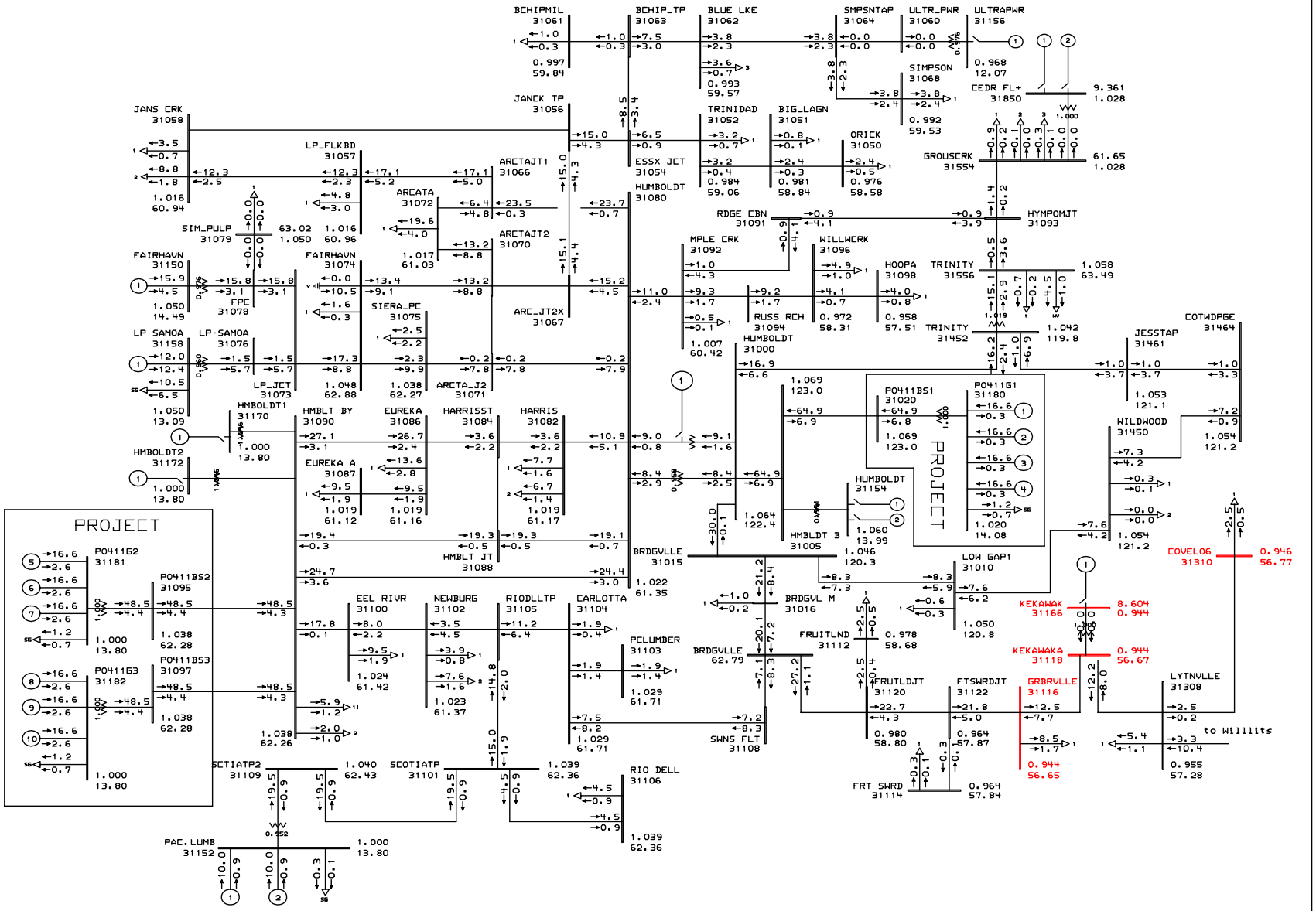

General Electric International, Inc. PSLF Program MW/MVAR Mon Dec 12 06:51:32 2005

PG&E Tranmission Planning	PG&E 2004 BASE CASE SERIES - 2008 Humboldt Summer Peak Case Post-Project PATH15=-1615MW(S-N) PATH26=3333MW(N-S) PDCI=3105MW(N-S) COI=4736MW(N-S) RAMCO Humboldt Energy Facility SIS-2 Post-Project	Plot 03 - 2008 Summer Peak Normal Conditions - Post-Project	C:\pslf\pge\ramcohef2\draw\ram C:\pslf\pge\ramcohef2\cases\su Rating = 1

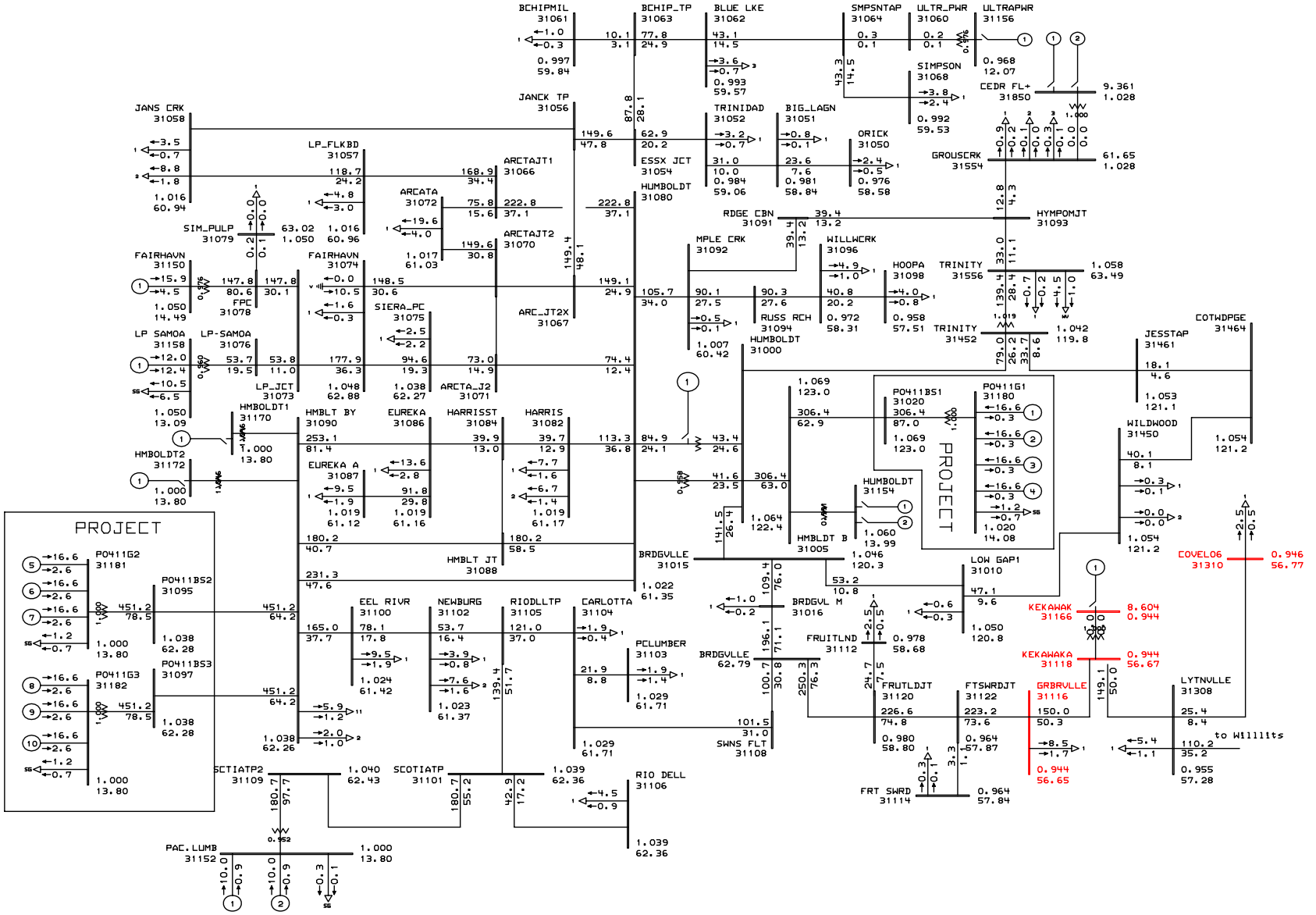

General Electric International, Inc. PSLF Program AMPS/Pct Mon Dec 12 06:51:32 2005

PG&E Tranmission Planning	PG&E 2004 BASE CASE SERIES - 2008 Humboldt Summer Peak Case Post-Project PATH15=-1615MW(S-N) PATH26=3333MW(N-S) PDCI=3105MW(N-S) COI=4736MW(N-S) RAMCO Humboldt Energy Facility SIS-2 Post-Project	Plot 04 - 2008 Summer Peak Normal Conditions - Post-Project	C:\pslf\pge\ramcohef2\draw\ram C:\pslf\pge\ramcohef2\cases\su Rating = 1

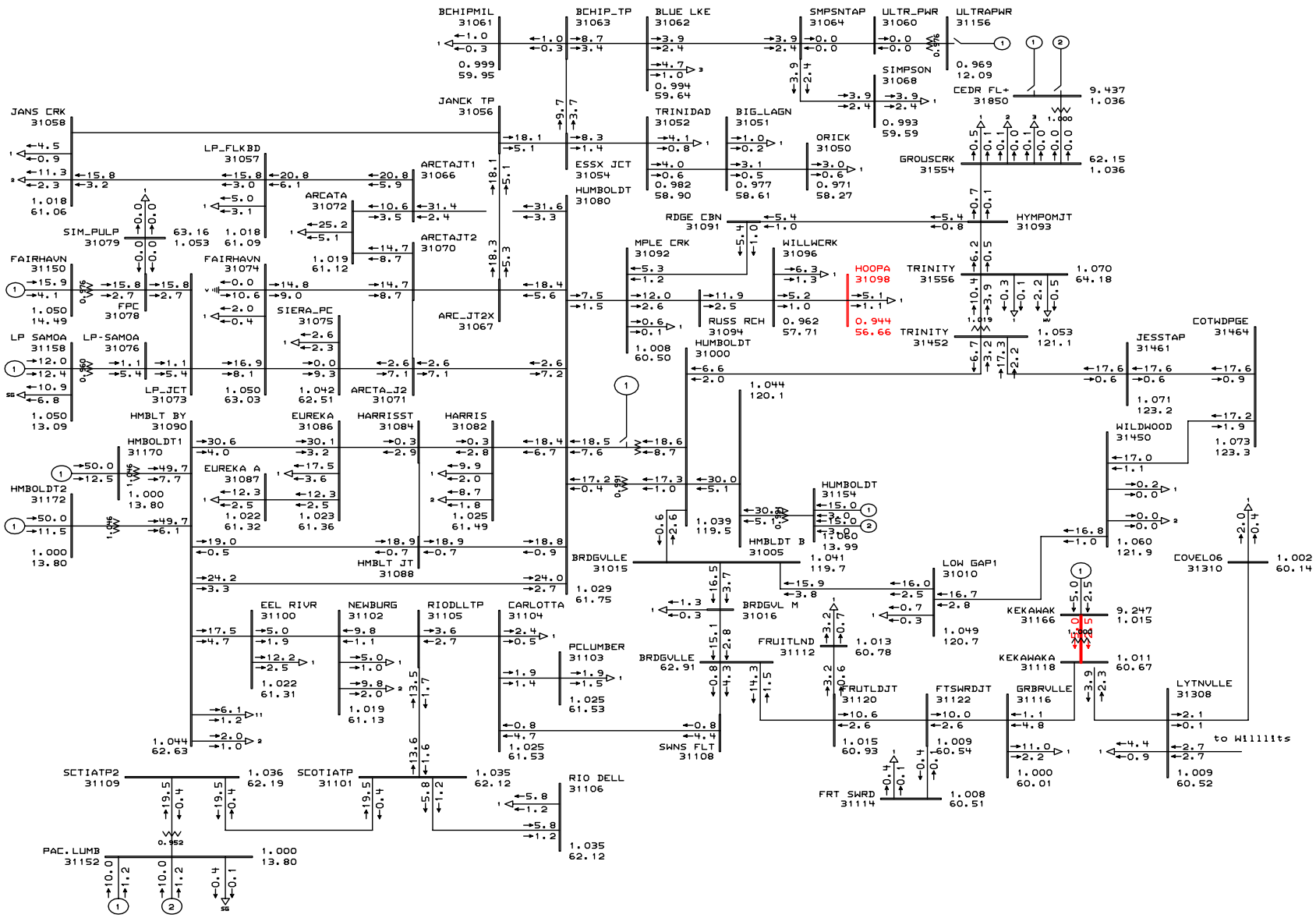

General Electric International, Inc. PSLF Program MW/MVAR Mon Dec 12 06:51:33 2005

PG&E Tranmission Planning	PG&E 2004 BASE CASE SERIES - 2008 Humboldt Winter Peak Case Pre-Project PATH15=3536MW(S-N) PATH26=-674MW(N-S) PDCI=-1845MW(N-S) COI=-3110MW(N-S) RAMCO Humboldt Energy Facility SIS-2 Pre-project	Plot 05 - 2008 Winter Peak Normal Conditions - Pre-Project	C:\pslf\pge\ramcohef2\draw\ram C:\pslf\pge\ramcohef2\cases\wi Rating = 3

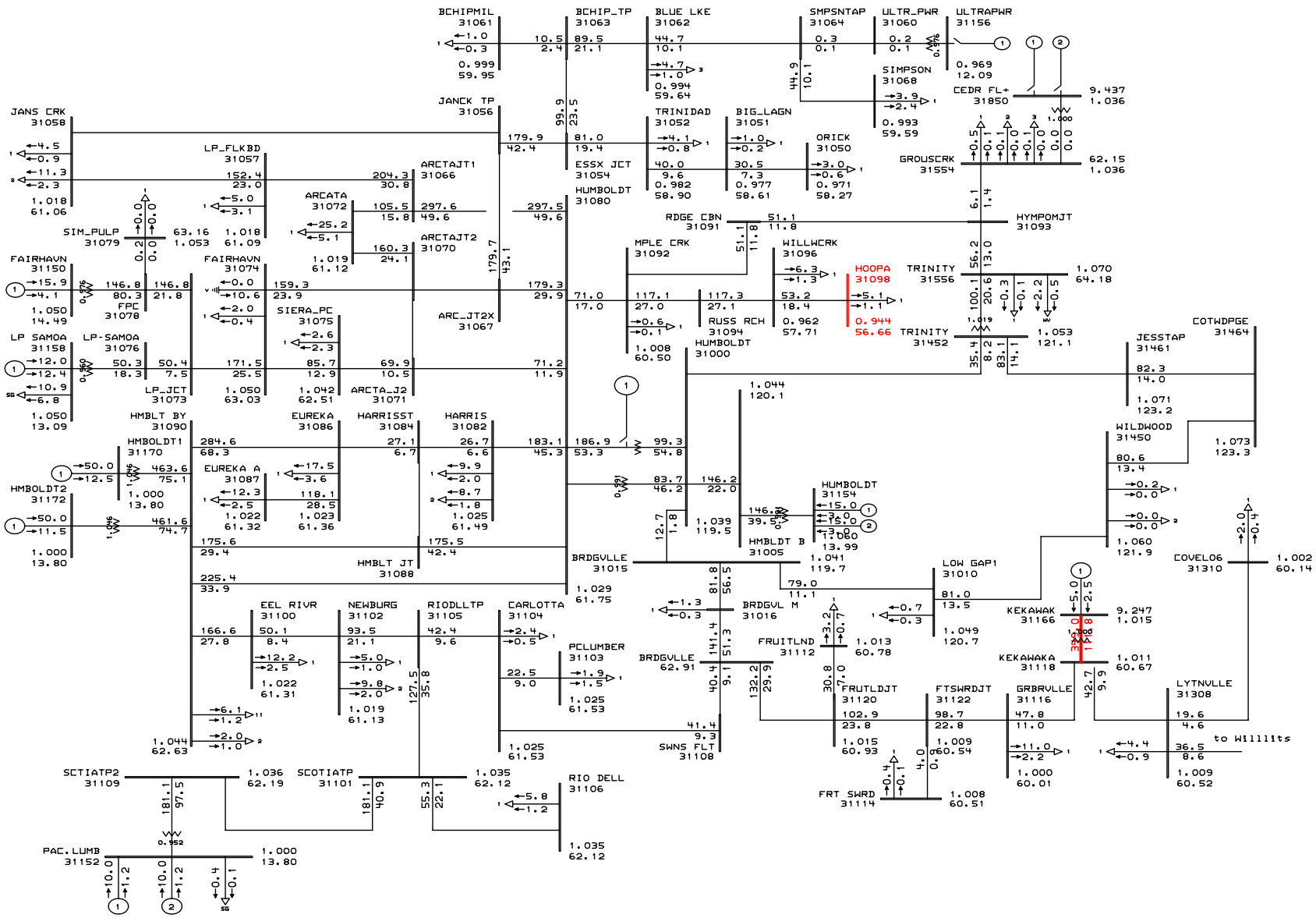

General Electric International, Inc. PSLF Program AMPS/Pct Mon Dec 12 06:51:33 2005

PG&E Tranmission Planning	PG&E 2004 BASE CASE SERIES - 2008 Humboldt Winter Peak Case Pre-Project PATH15=3536MW(S-N) PATH26=-674MW(N-S) PDCI=-1845MW(N-S) COI=-3110MW(N-S) RAMCO Humboldt Energy Facility SIS-2 Pre-project	Plot 06 - 2008 Winter Peak Normal Conditions - Pre-Project	C:\pslf\pge\ramcohef2\draw\ram C:\pslf\pge\ramcohef2\cases\wi Rating = 3

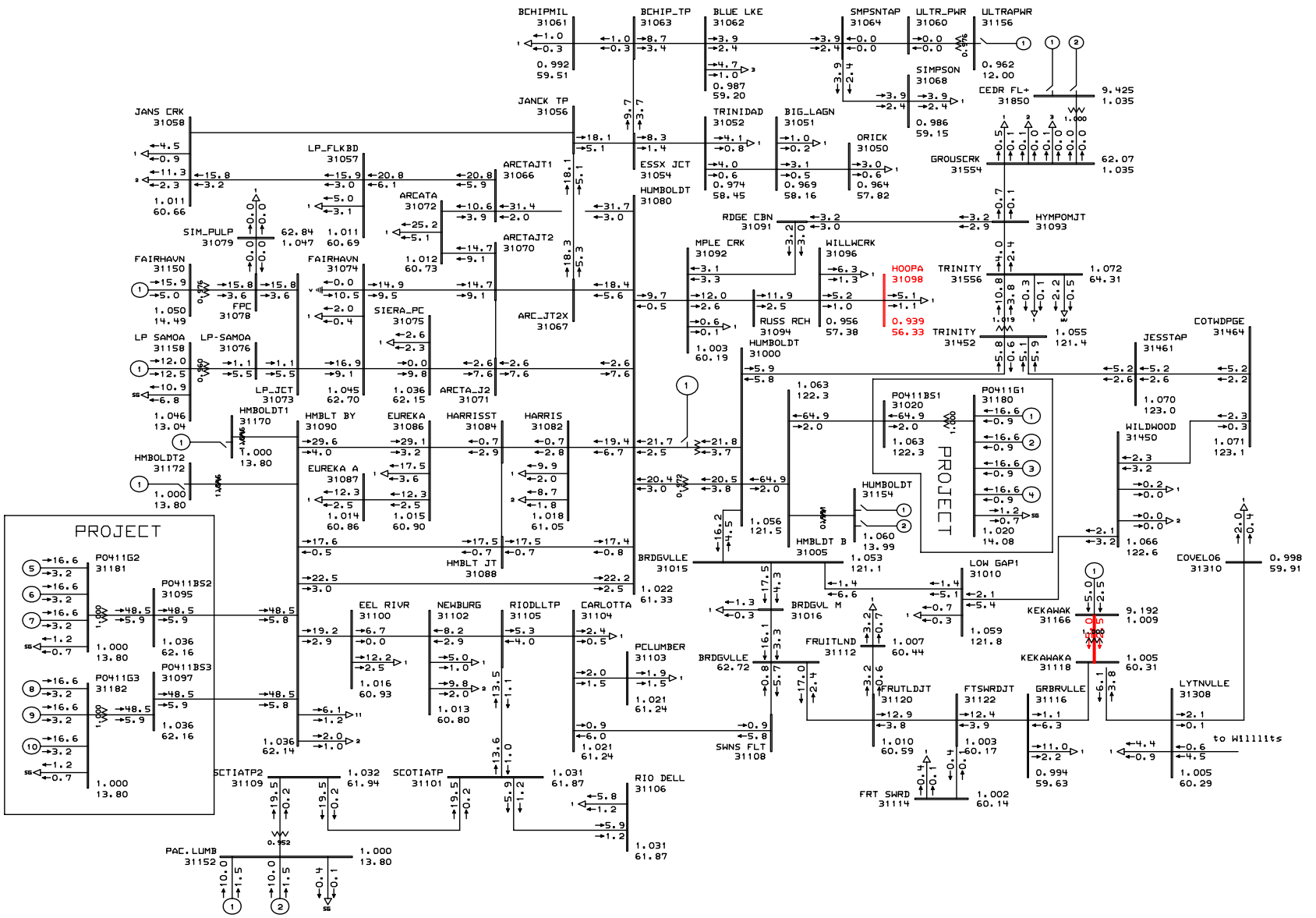

General Electric International, Inc. PSLF Program MW/MVAR Mon Dec 12 06:51:34 2005

PG&E Tranmission Planning	PG&E 2004 BASE CASE SERIES - 2008 Humboldt Winter Peak Case Post-Project PATH15=3536MW(S-N) PATH26=-675MW(N-S) PDCI=-1845MW(N-S) COI=-3110MW(N-S) RAMCO Humboldt Energy Facility SIS-2 Post-Project	Plot 07 - 2008 Winter Peak Normal Conditions - Post-Project	C:\pslf\pge\ramcohef2\draw\ram C:\pslf\pge\ramcohef2\cases\wi Rating = 3

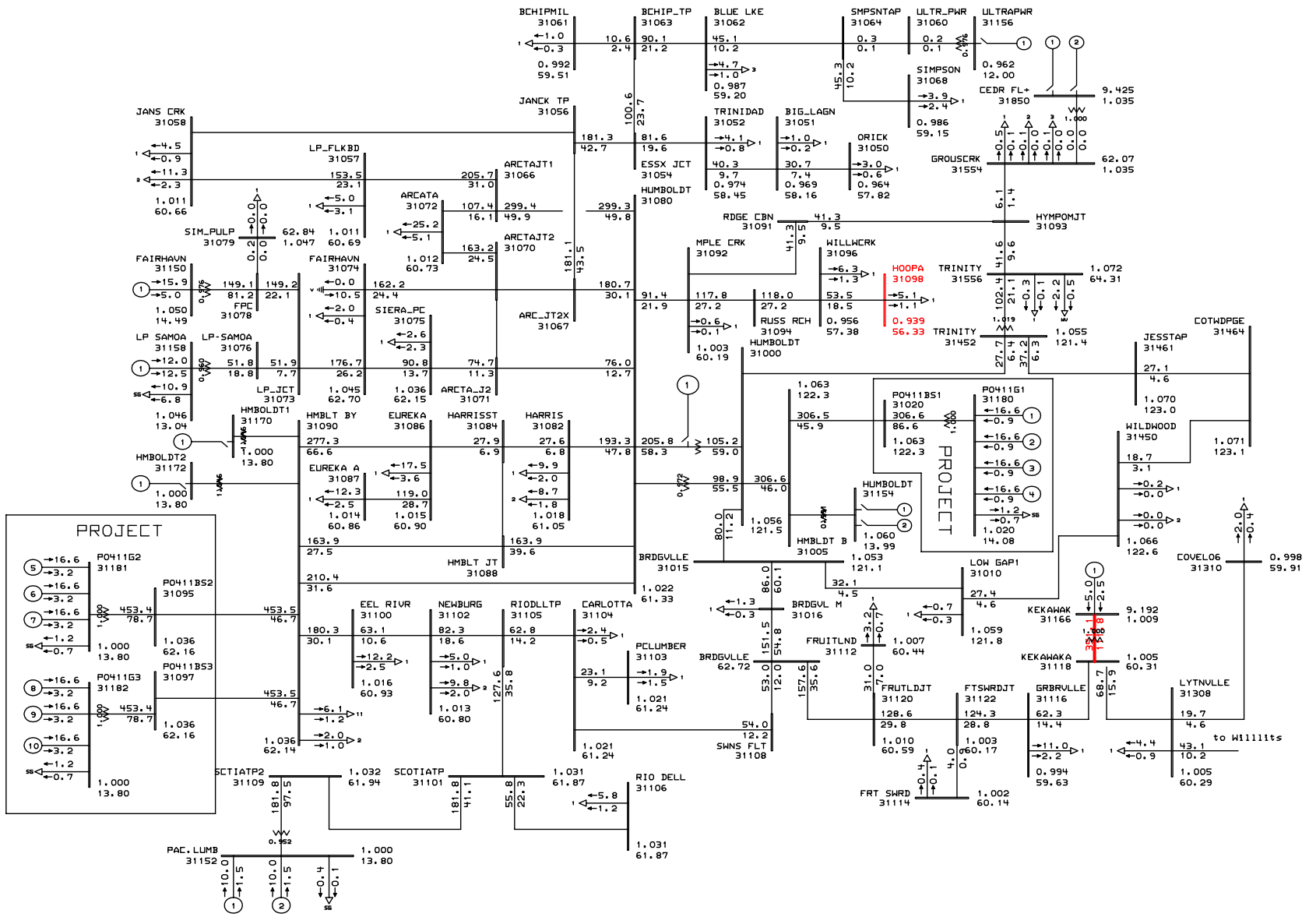

General Electric International, Inc. PSLF Program AMPS/Pct Mon Dec 12 06:51:34 2005

PG&E Tranmission Planning	PG&E 2004 BASE CASE SERIES - 2008 Humboldt Winter Peak Case Post-Project PATH15=3536MW(S-N) PATH26=-675MW(N-S) PDCI=-1845MW(N-S) COI=-3110MW(N-S) RAMCO Humboldt Energy Facility SIS-2 Post-Project	Plot 08 - 2008 Winter Peak Normal Conditions - Post-Project	C:\pslf\pge\ramcohef2\draw\ram C:\pslf\pge\ramcohef2\cases\wi Rating = 3

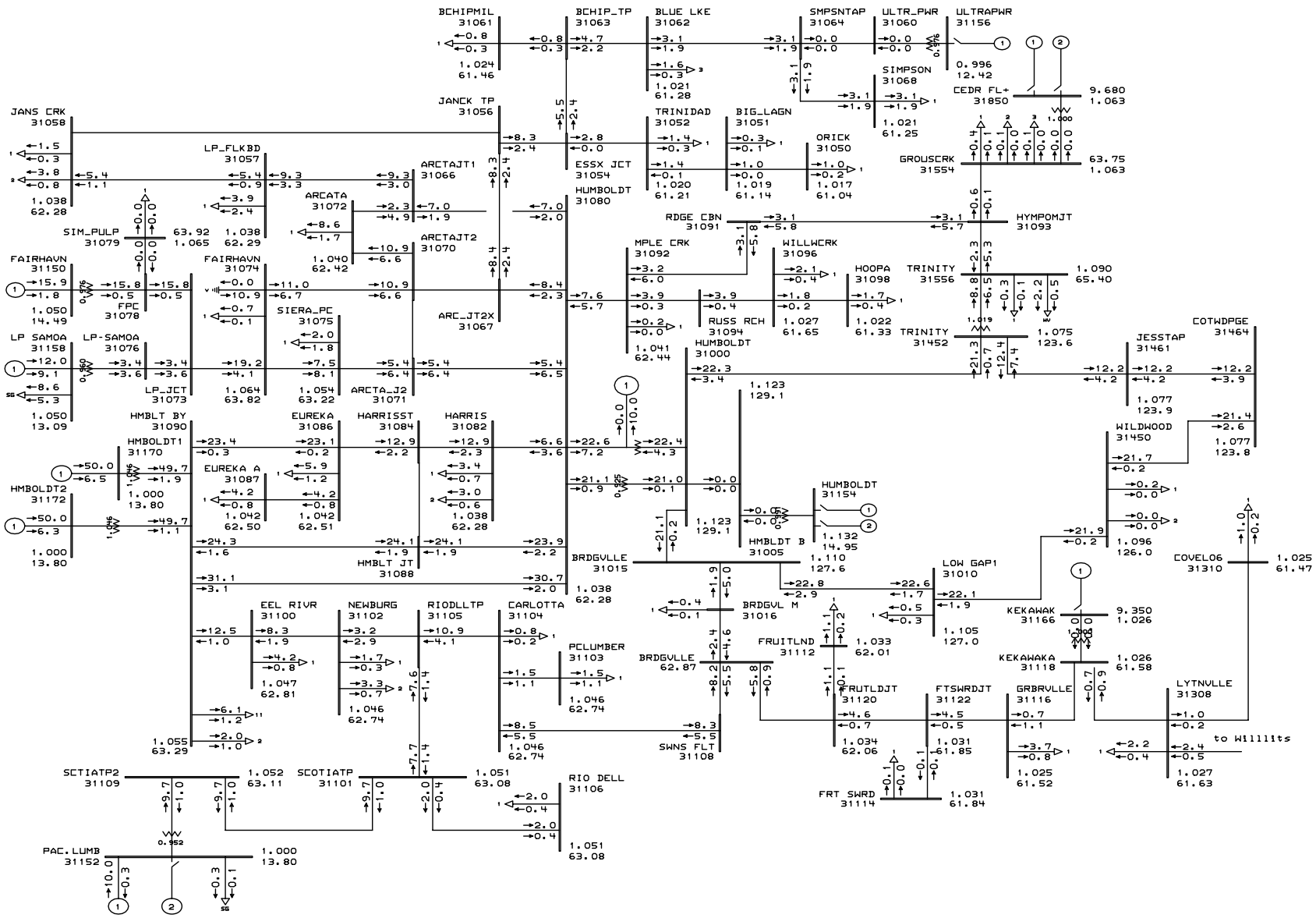

General Electric International, Inc. PSLF Program MW/MVAR Mon Dec 12 06:51:41 2005

PG&E
Tranmission Planning

PG&E 2004 BASE CASE SERIES - 2008 Summer Off Peak Case Pre-Project
PATH15=4943MW(S-N) PATH26=-1783MW(N-S) PDCI=-1848MW(N-S) COI=-3638MW(N-S)
RAMCO Humboldt Energy Facility SIS-2 Pre-project

Plot 09 - 2008 Summer Off Peak Normal Conditions - Pre-Project

C:\pslf\pge\ramcohef2\draw\ram
C:\pslf\pge\ramcohef2\cases\su
Rating = 1

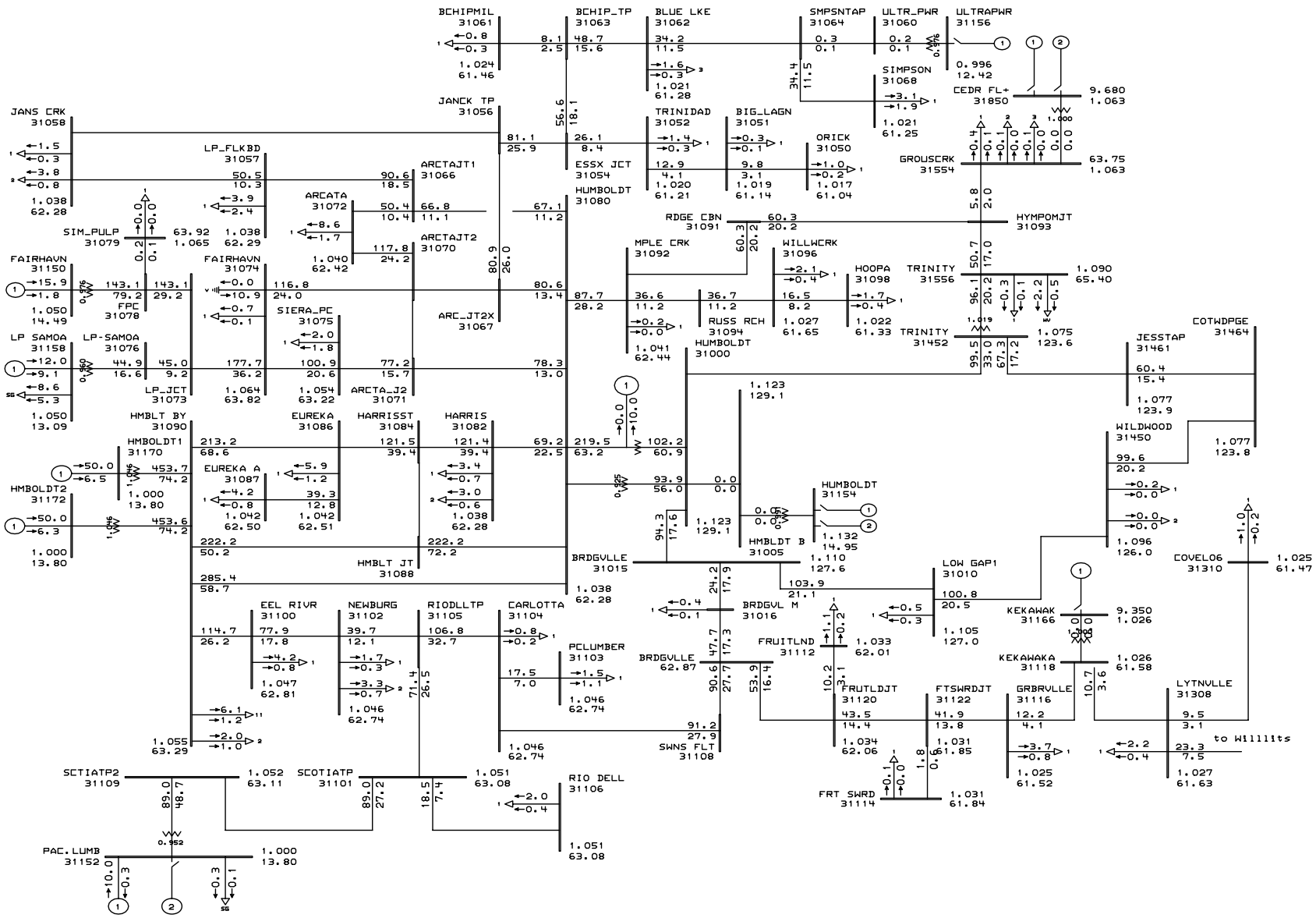

General Electric International, Inc. PSLF Program AMPS/Pct Mon Dec 12 06:51:41 2005

PG&E Tranmission Planning	PG&E 2004 BASE CASE SERIES - 2008 Summer Off Peak Case Pre-Project PATH15=4943MW(S-N) PATH26=-1783MW(N-S) PDCI=-1848MW(N-S) COI=-3638MW(N-S) RAMCO Humboldt Energy Facility SIS-2 Pre-project	Plot 10 - 2008 Summer Off Peak Normal Conditions - Pre-Project	C:\pslf\pge\ramcohef2\draw\ram C:\pslf\pge\ramcohef2\cases\su Rating = 1

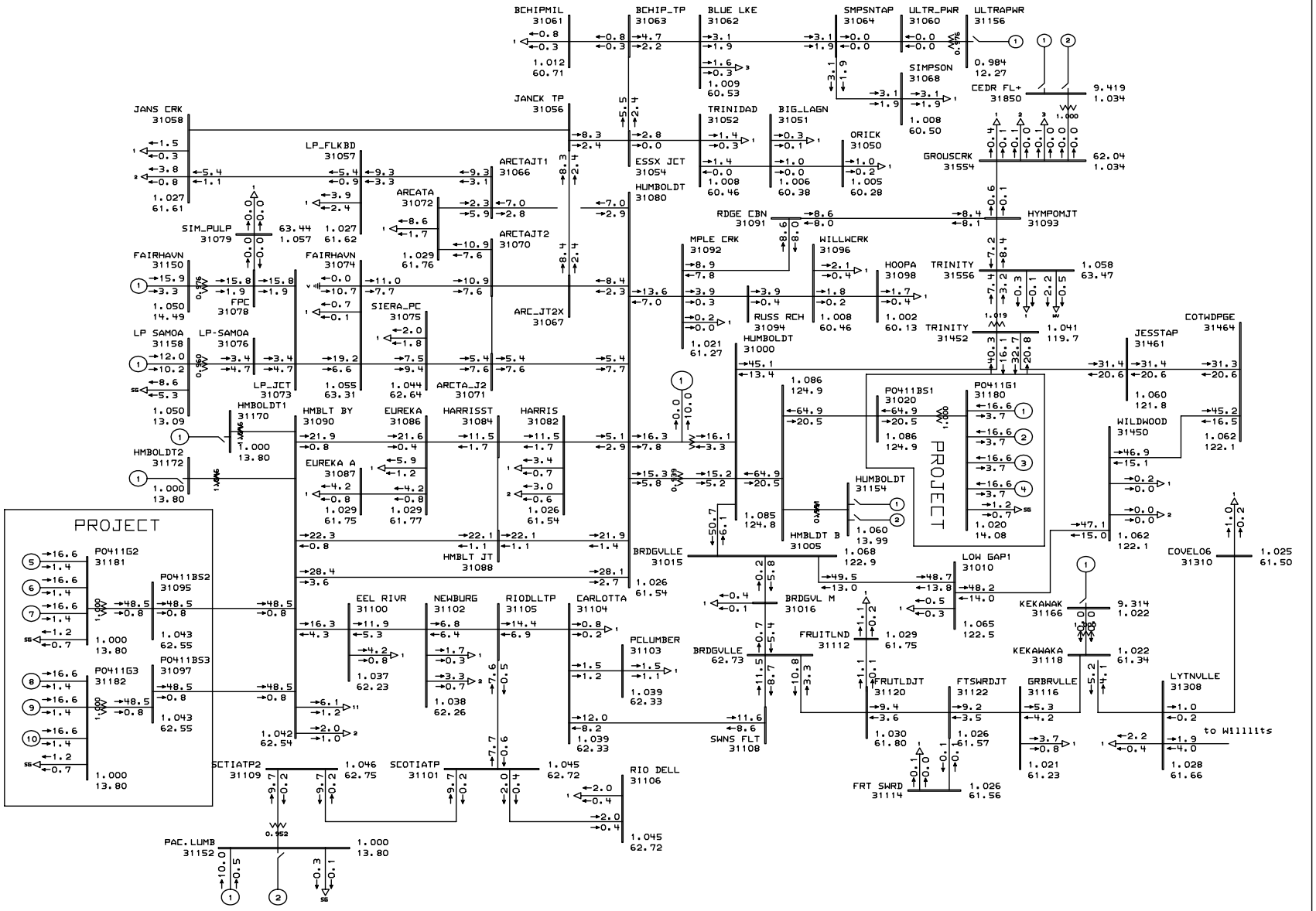

General Electric International, Inc. PSLF Program MW/MVAR Mon Dec 12 06:51:44 2005

PG&E Tranmission Planning	PG&E 2004 BASE CASE SERIES - 2008 Summer Off Peak Case Post-Project PATH15=4944MW(S-N) PATH26=-1785MW(N-S) PDCI=-1848MW(N-S) COI=-3636MW(N-S) RAMCO Humboldt Energy Facility SIS-2 Post-Project	Plot 11 - 2008 Summer Off Peak Normal Conditions - Post-Project	C:\pslf\pge\ramcohef2\draw\ram C:\pslf\pge\ramcohef2\cases\su Rating = 1

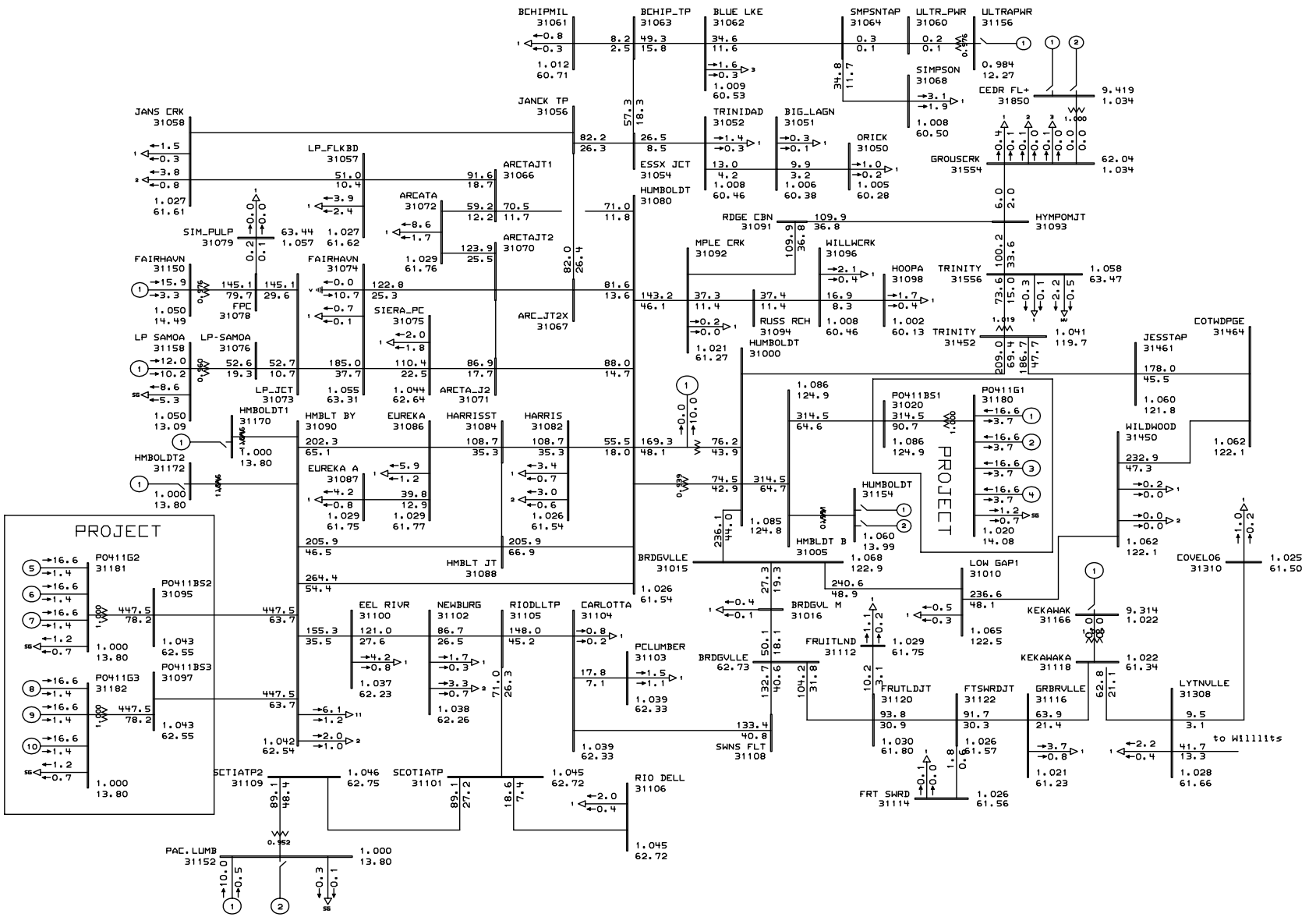

General Electric International, Inc. PSLF Program AMPS/Pct Mon Dec 12 06:51:44 2005

PG&E Tranmission Planning	PG&E 2004 BASE CASE SERIES - 2008 Summer Off Peak Case Post-Project PATH15=4944MW(S-N) PATH26=-1785MW(N-S) PDCI=-1848MW(N-S) COI=-3636MW(N-S) RAMCO Humboldt Energy Facility SIS-2 Post-Project	Plot 12 - 2008 Summer Off Peak Normal Conditions - Post-Project	C:\pslf\pge\ramcohef2\draw\ram C:\pslf\pge\ramcohef2\cases\su Rating = 1

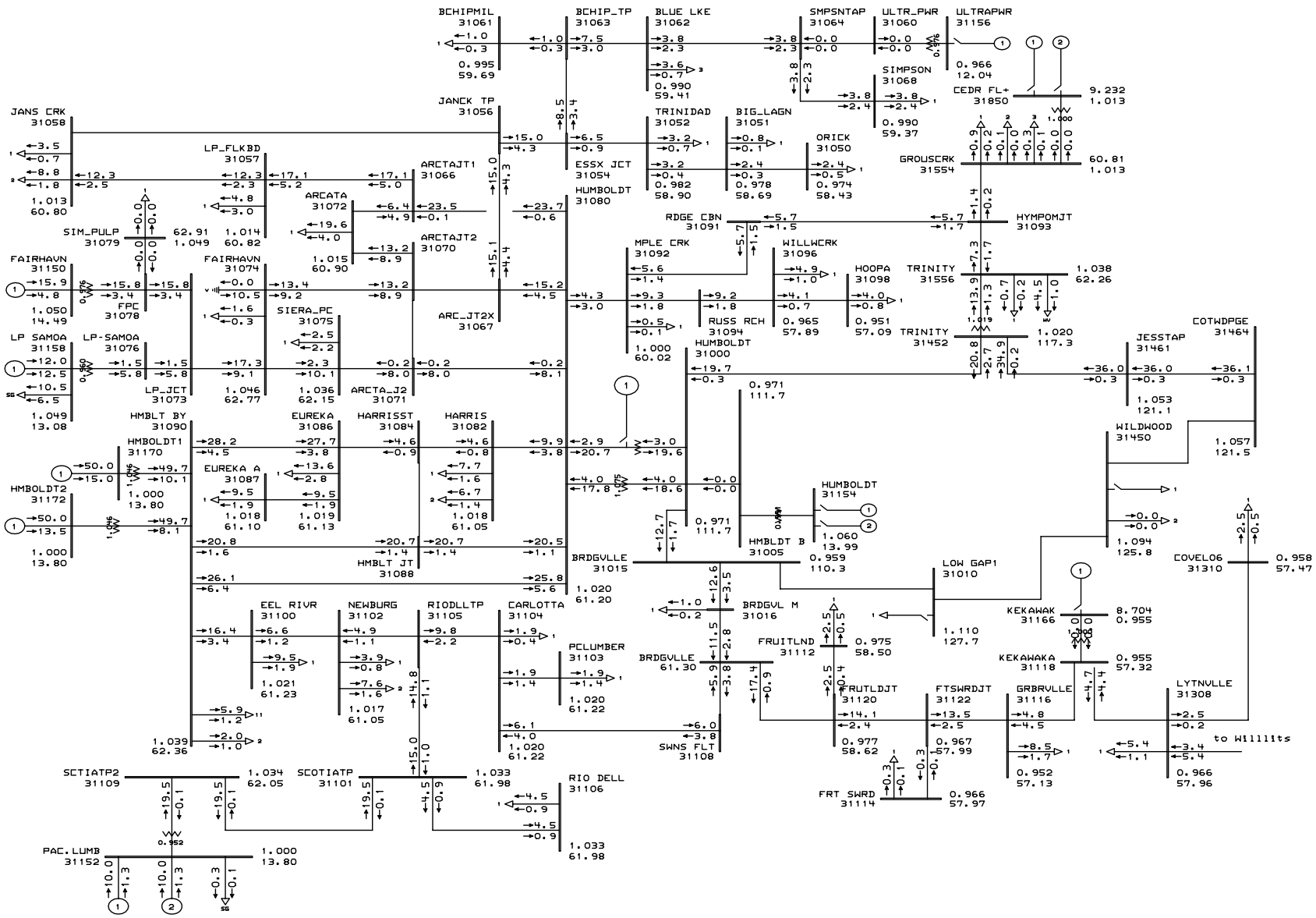

General Electric International, Inc. PSLF Program MW/MVAR Mon Dec 12 06:51:47 2005

PG&E Tranmission Planning	PG&E 2004 BASE CASE SERIES - 2008 Humboldt Summer Peak Case Pre-Project PATH15=-1616MW(S-N) PATH26=3335MW(N-S) PDCI=3104MW(N-S) COI=4738MW(N-S) RAMCO Humboldt Energy Facility SIS-2 Pre-project	Plot 13 - 2008 Summer Peak - Pre-Project Outage: Brigdgeville - Cottonwood 115 kV Line	C:\pslf\pge\ramcohef2\draw\ram C:\pslf\pge\ramcohef2\cases\su Rating = 2

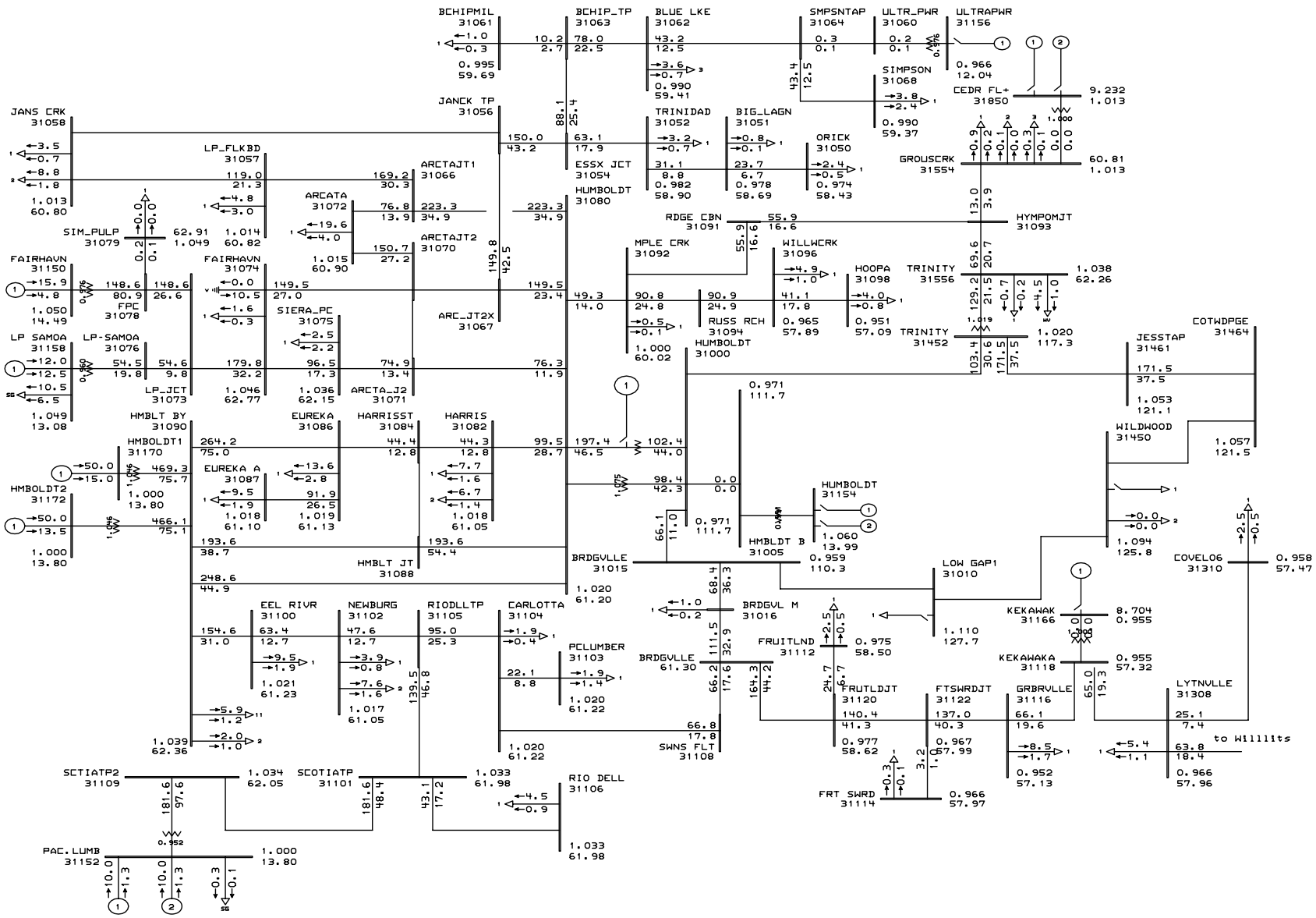

General Electric International, Inc. PSLF Program AMPS/Pct Mon Dec 12 06:51:47 2005

PG&E Tranmission Planning	PG&E 2004 BASE CASE SERIES - 2008 Humboldt Summer Peak Case Pre-Project PATH15=-1616MW(S-N) PATH26=3335MW(N-S) PDCI=3104MW(N-S) COI=4738MW(N-S) RAMCO Humboldt Energy Facility SIS-2 Pre-project	Plot 14 - 2008 Summer Peak - Pre-Project Outage: Brigdgeville - Cottonwood 115 kV Line	C:\pslf\pge\ramcohef2\draw\ram C:\pslf\pge\ramcohef2\cases\su Rating = 2

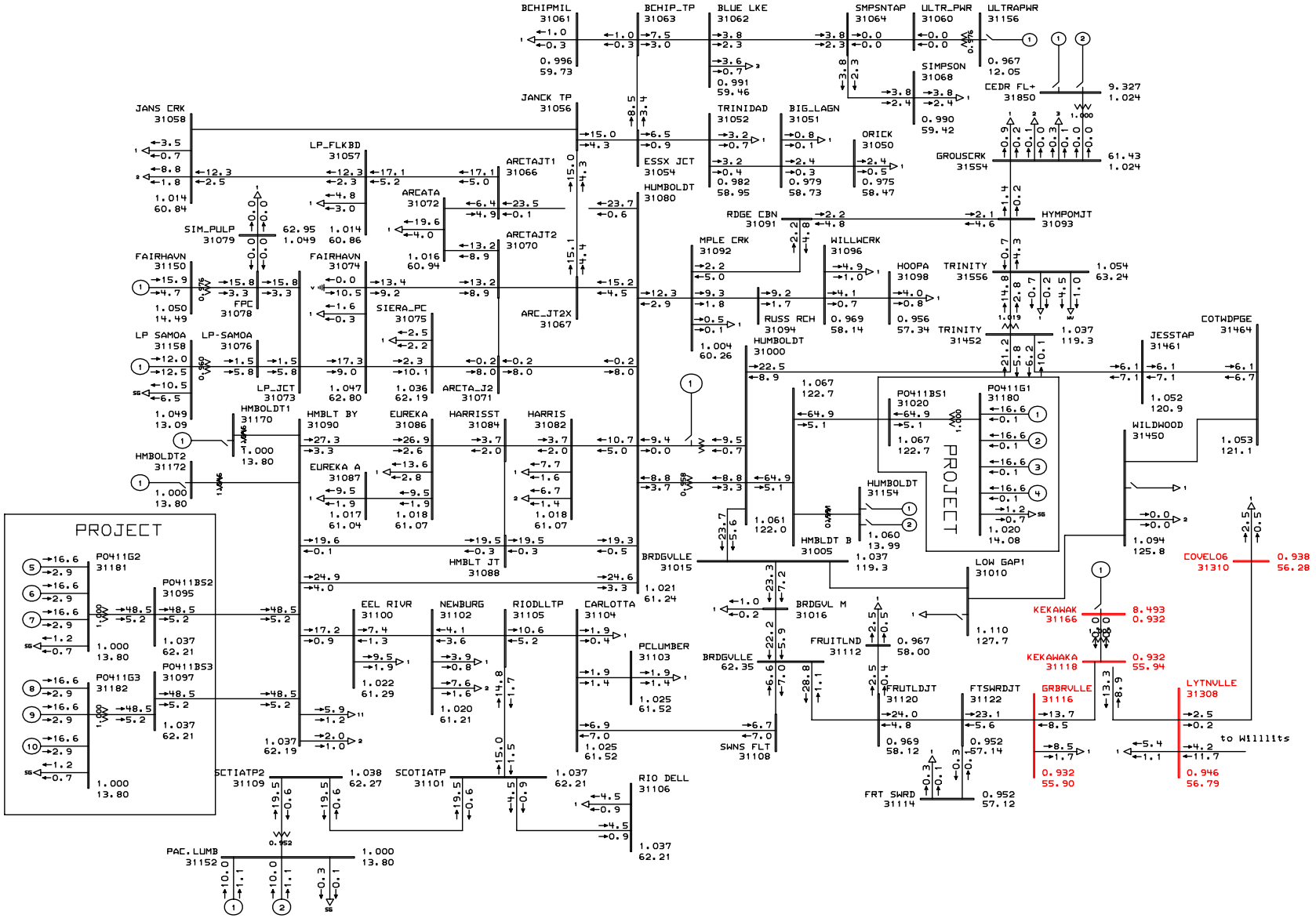

General Electric International, Inc. PSLF Program MW/MVAR Mon Dec 12 06:51:49 2005

PG&E Tranmission Planning	PG&E 2004 BASE CASE SERIES - 2008 Humboldt Summer Peak Case Post-Project PATH15=-1615MW(S-N) PATH26=3333MW(N-S) PDCI=3105MW(N-S) COI=4736MW(N-S) RAMCO Humboldt Energy Facility SIS-2 Post-Project	Plot 15 - 2008 Summer Peak - Post-Project Outage: Brigdgeville - Cottonwood 115 kV Line	C:\pslf\pge\ramcohef2\draw\ram C:\pslf\pge\ramcohef2\cases\su Rating = 2

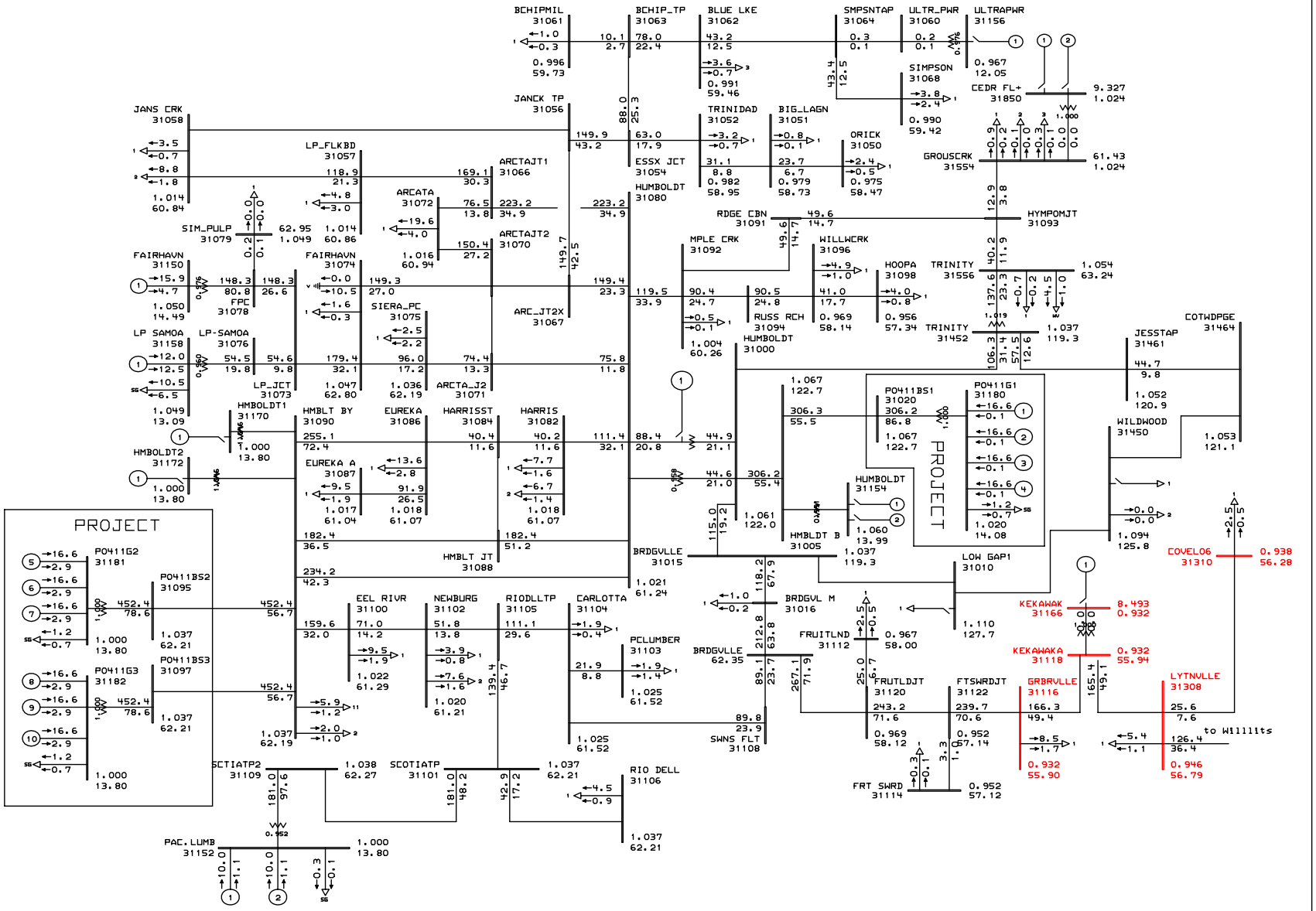

General Electric International, Inc. PSLF Program AMPS/Pct Mon Dec 12 06:51:49 2005

PG&E Tranmission Planning	PG&E 2004 BASE CASE SERIES - 2008 Humboldt Summer Peak Case Post-Project PATH15=-1615MW(S-N) PATH26=3333MW(N-S) PDCI=3105MW(N-S) COI=4736MW(N-S) RAMCO Humboldt Energy Facility SIS-2 Post-Project	Plot 16 - 2008 Summer Peak - Post-Project Outage: Brigdgeville - Cottonwood 115 kV Line	C:\pslf\pge\ramcohef2\draw\ram C:\pslf\pge\ramcohef2\cases\su Rating = 2

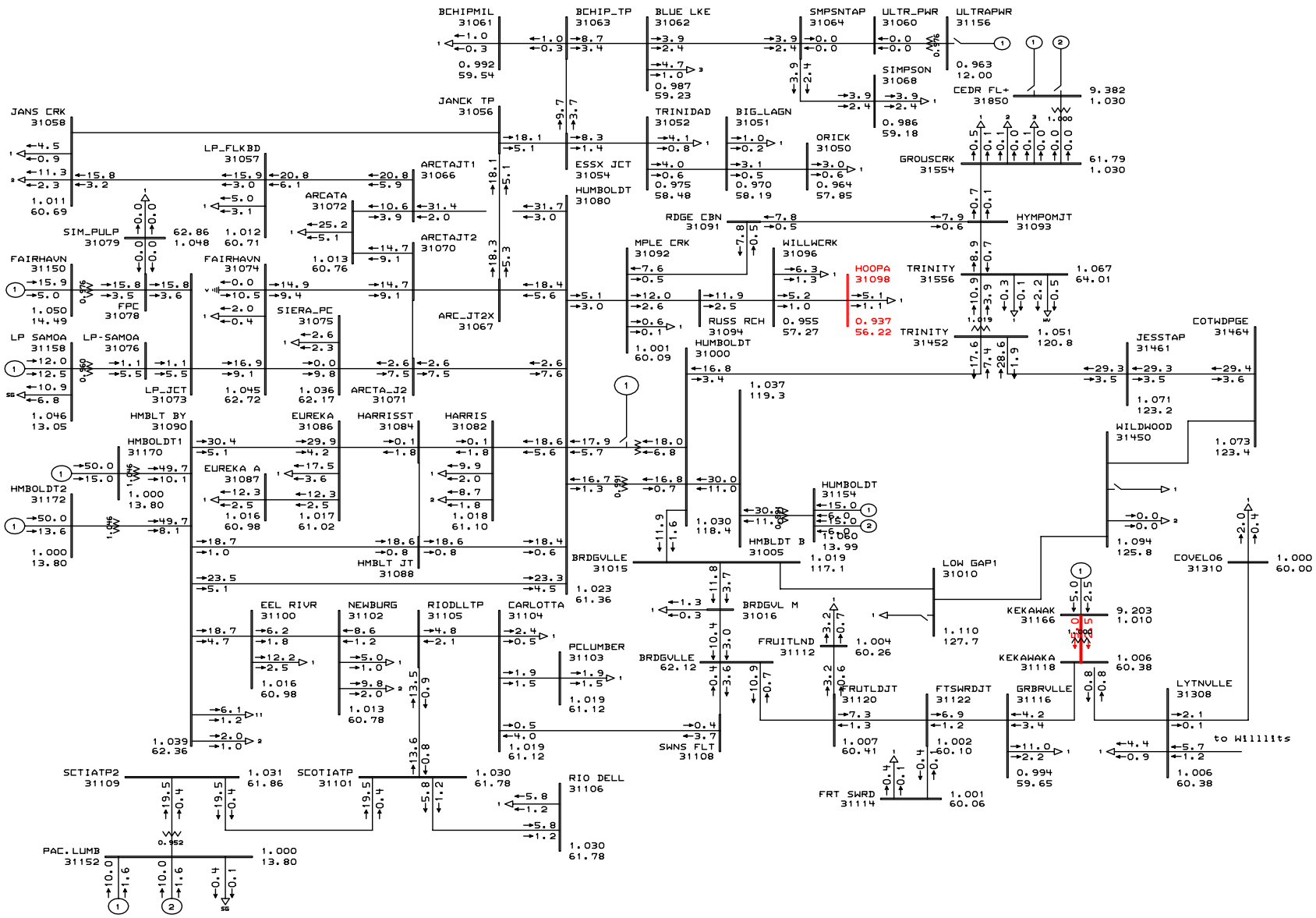

General Electric International, Inc. PSLF Program MW/MVAR Mon Dec 12 06:51:51 2005

PG&E Tranmission Planning	PG&E 2004 BASE CASE SERIES - 2008 Humboldt Winter Peak Case Pre-Project PATH15=3536MW(S-N) PATH26=-674MW(N-S) PDCI=-1845MW(N-S) COI=-3110MW(N-S) RAMCO Humboldt Energy Facility SIS-2 Pre-project	Plot 17 - 2008 Winter Peak - Pre-Project Outage: Brigdgeville - Cottonwood 115 kV Line	C:\pslf\pge\ramcohef2\draw\ram C:\pslf\pge\ramcohef2\cases\wi Rating = 4

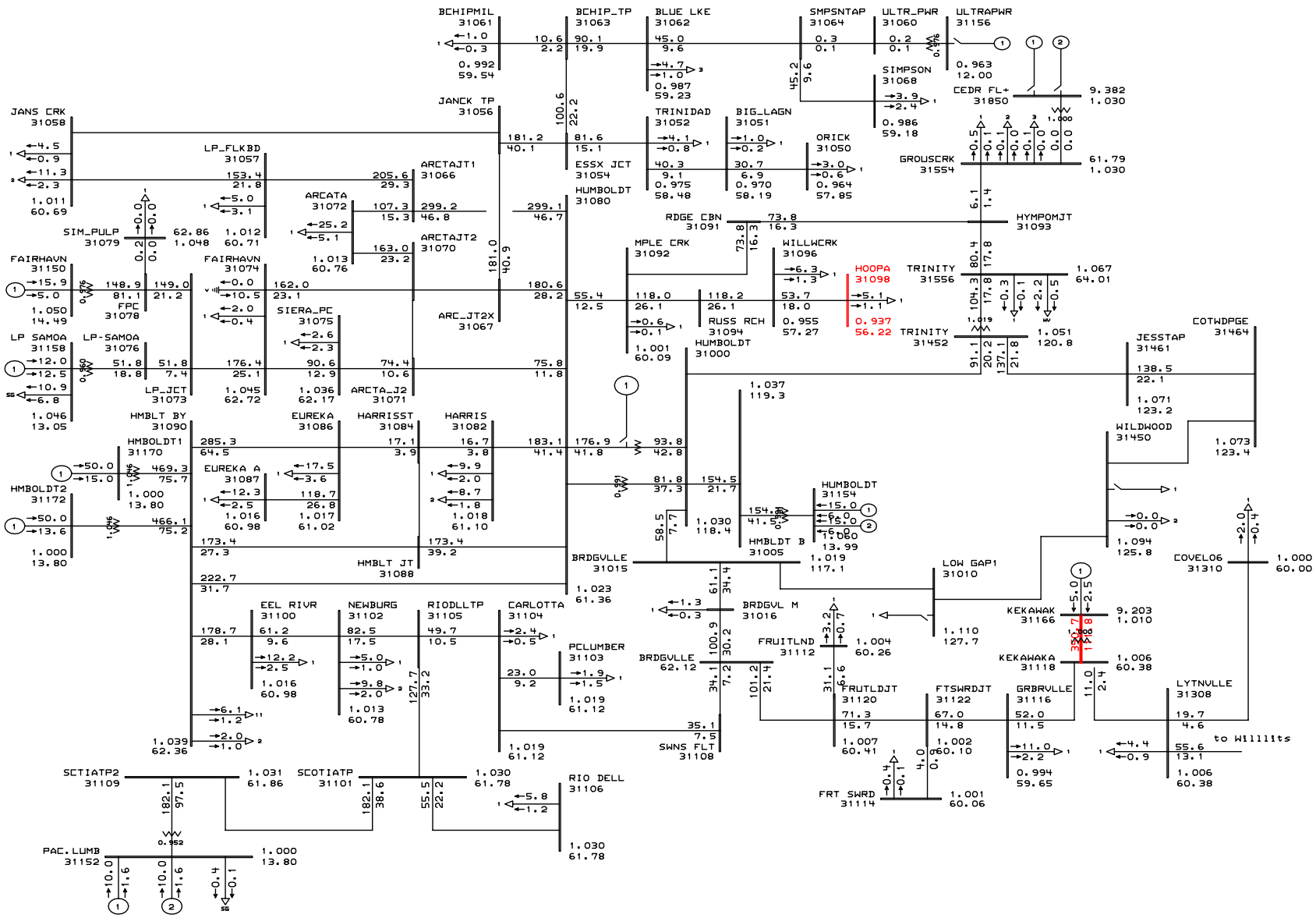

General Electric International, Inc. PSLF Program AMPS/Pct Mon Dec 12 06:51:51 2005

PG&E Tranmission Planning	PG&E 2004 BASE CASE SERIES - 2008 Humboldt Winter Peak Case Pre-Project PATH15=3536MW(S-N) PATH26=-674MW(N-S) PDCI=-1845MW(N-S) COI=-3110MW(N-S) RAMCO Humboldt Energy Facility SIS-2 Pre-project	Plot 18 - 2008 Winter Peak - Pre-Project Outage: Brigdgeville - Cottonwood 115 kV Line	C:\pslf\pge\ramcohef2\draw\ram C:\pslf\pge\ramcohef2\cases\wi Rating = 4

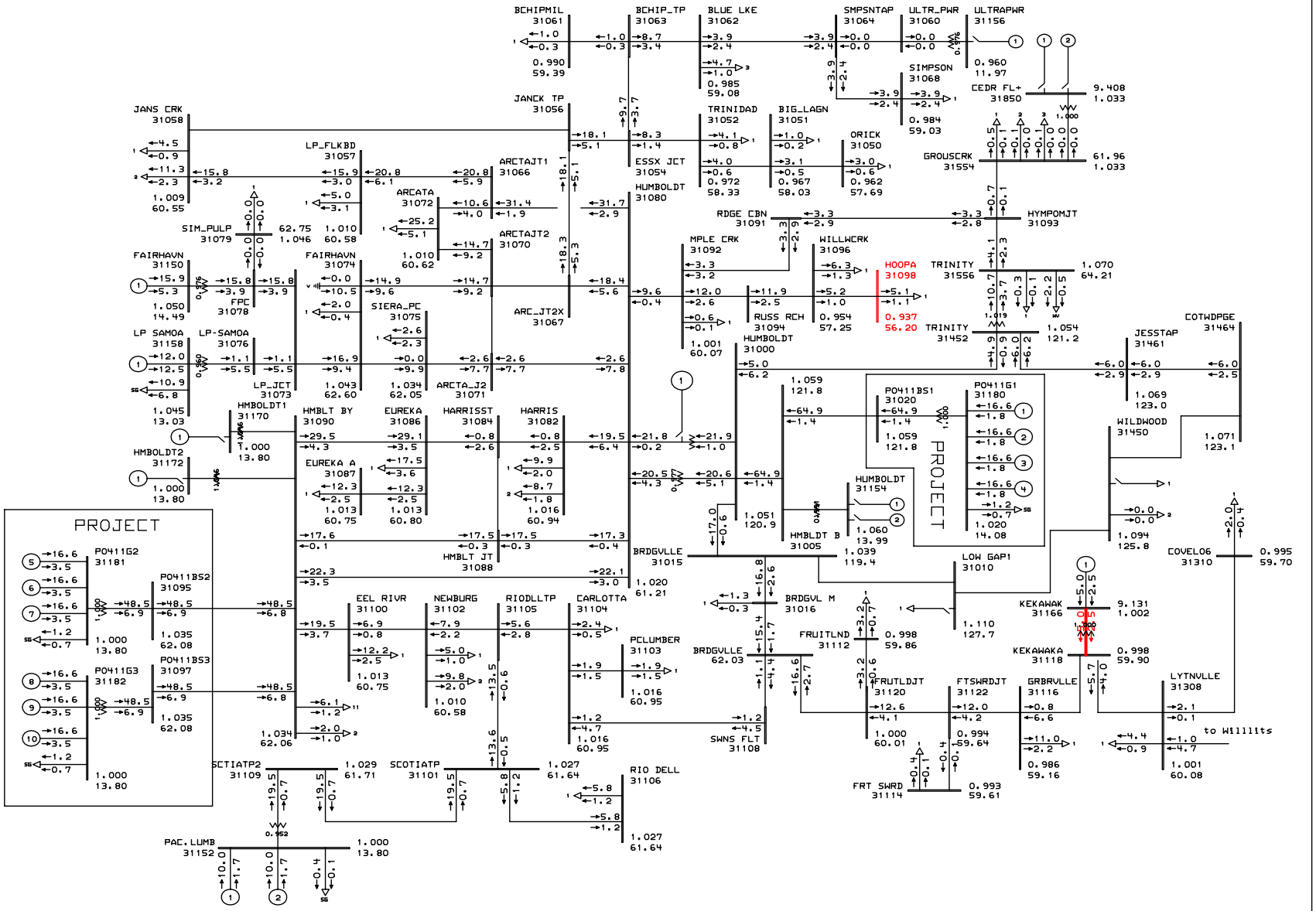

General Electric International, Inc. PSLF Program MW/MVAR Mon Dec 12 06:51:53 2005

PG&E Tranmission Planning	PG&E 2004 BASE CASE SERIES - 2008 Humboldt Winter Peak Case Post-Project PATH15=3536MW(S-N) PATH26=-675MW(N-S) PDCI=-1845MW(N-S) COI=-3110MW(N-S) RAMCO Humboldt Energy Facility SIS-2 Post-Project	Plot 19 - 2008 Winter Peak - Post-Project Outage: Brigdgeville - Cottonwood 115 kV Line	C:\pslf\pge\ramcohef2\draw\ram C:\pslf\pge\ramcohef2\cases\wi Rating = 4

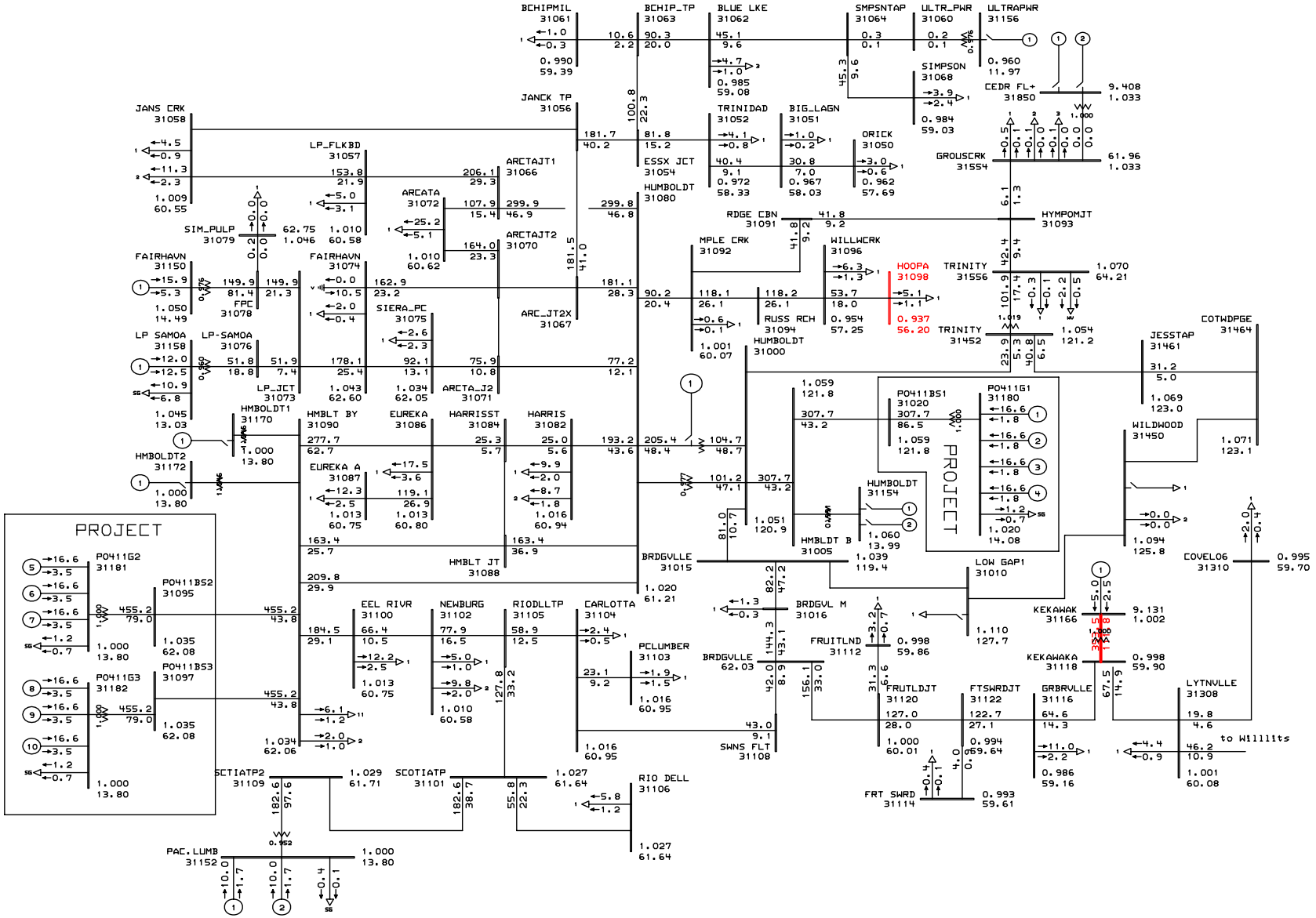

General Electric International, Inc. PSLF Program AMPS/Pct Mon Dec 12 06:51:53 2005

PG&E Tranmission Planning	PG&E 2004 BASE CASE SERIES - 2008 Humboldt Winter Peak Case Post-Project PATH15=3536MW(S-N) PATH26=-675MW(N-S) PDCI=-1845MW(N-S) COI=-3110MW(N-S) RAMCO Humboldt Energy Facility SIS-2 Post-Project	Plot 20 - 2008 Winter Peak - Post-Project Outage: Brigdgeville - Cottonwood 115 kV Line	C:\pslf\pge\ramcohef2\draw\ram C:\pslf\pge\ramcohef2\cases\wi Rating = 4

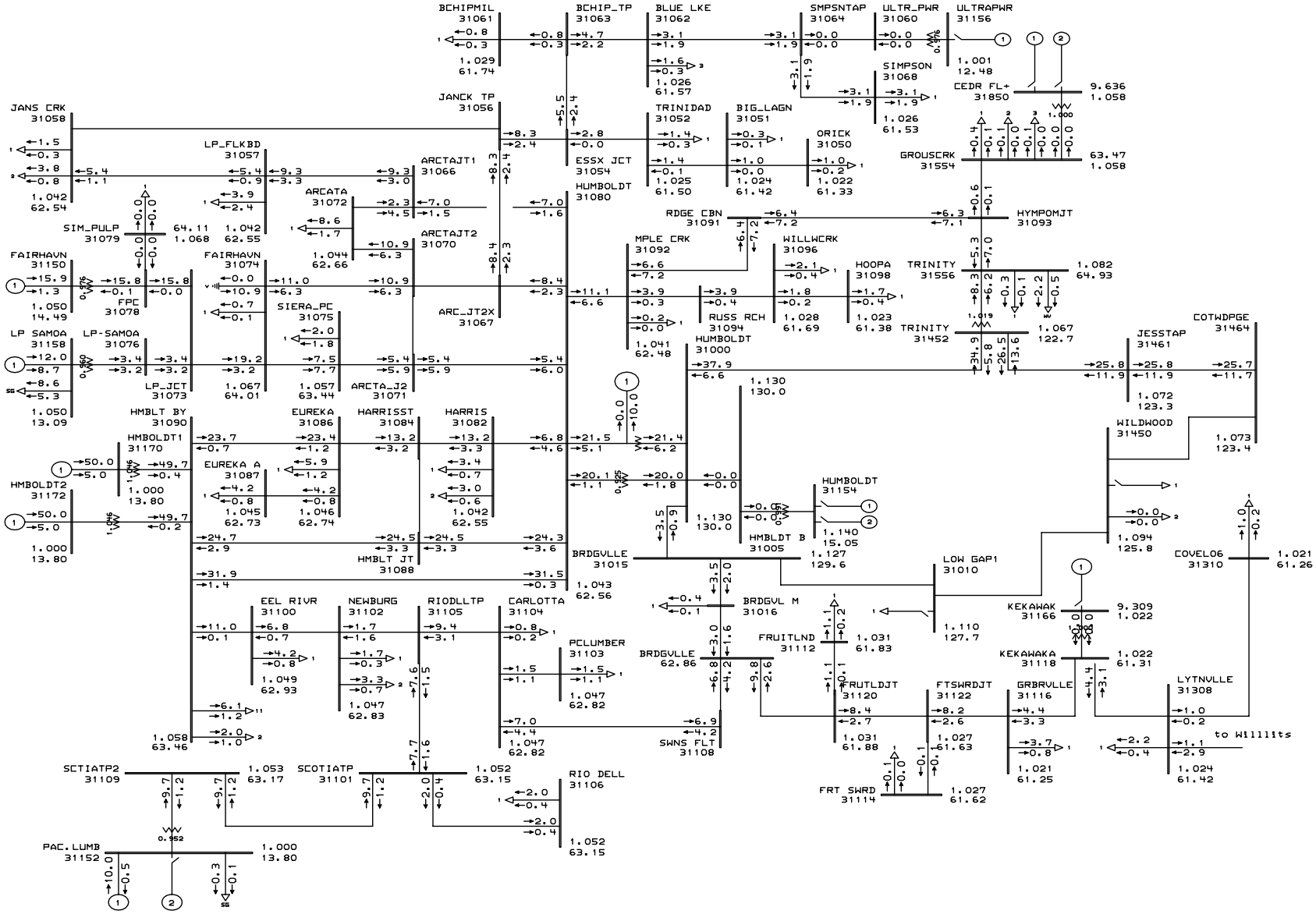

General Electric International, Inc. PSLF Program MW/MVAR Mon Dec 12 06:51:55 2005

PG&E Tranmission Planning	PG&E 2004 BASE CASE SERIES - 2008 Summer Off Peak Case Pre-Project PATH15=4943MW(S-N) PATH26=-1783MW(N-S) PDCI=-1848MW(N-S) COI=-3638MW(N-S) RAMCO Humboldt Energy Facility SIS-2 Pre-project	Plot 21 - 2008 Summer Off Peak - Pre-Project Outage: Brigdgeville - Cottonwood 115 kV Line	C:\pslf\pge\ramcohef2\draw\ram C:\pslf\pge\ramcohef2\cases\su Rating = 2

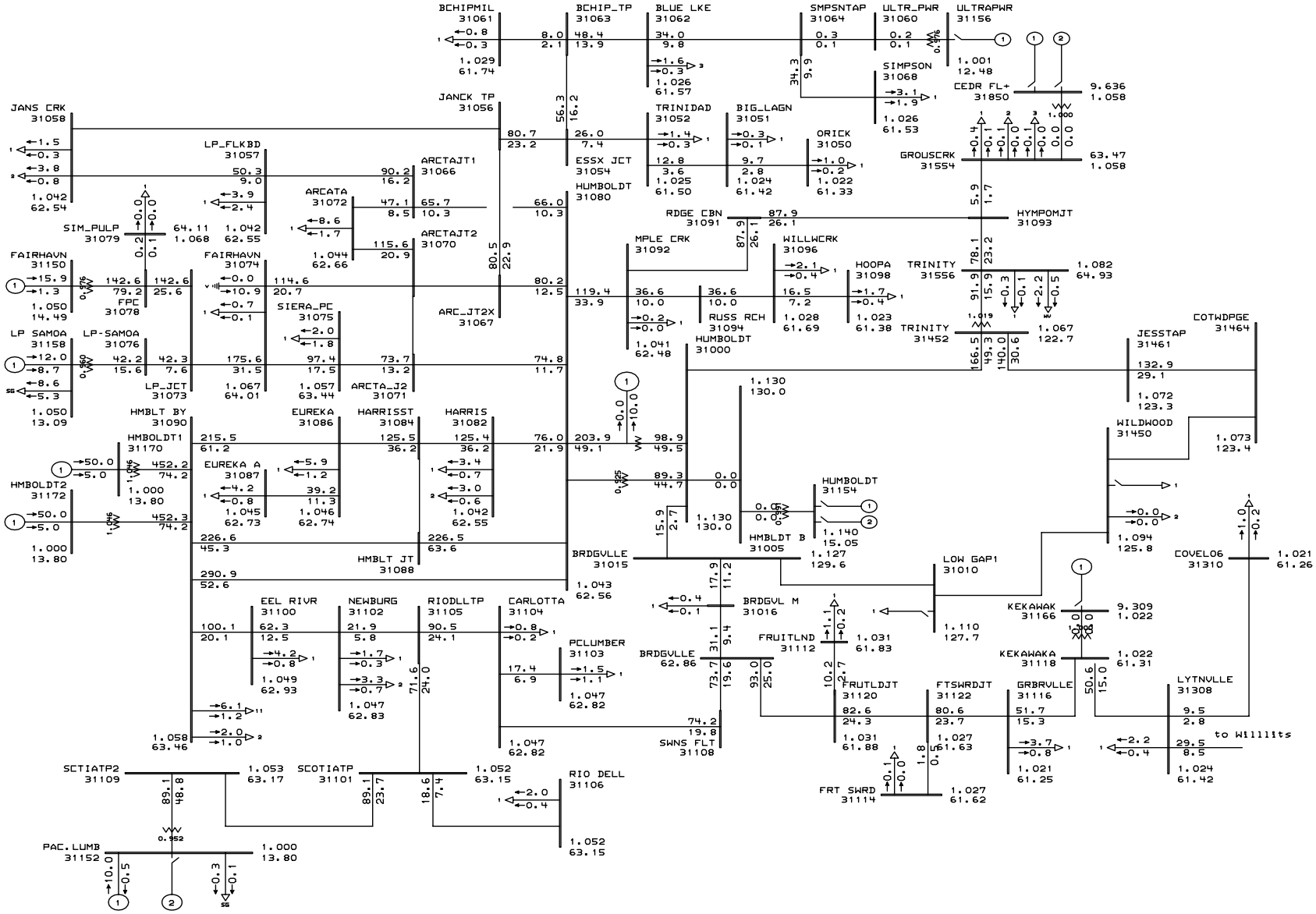

General Electric International, Inc. PSLF Program AMPS/Pct Mon Dec 12 06:51:55 2005

PG&E Tranmission Planning	PG&E 2004 BASE CASE SERIES - 2008 Summer Off Peak Case Pre-Project PATH15=4943MW(S-N) PATH26=-1783MW(N-S) PDCI=-1848MW(N-S) COI=-3638MW(N-S) RAMCO Humboldt Energy Facility SIS-2 Pre-project	Plot 22 - 2008 Summer Off Peak - Pre-Project Outage: Brigdgeville - Cottonwood 115 kV Line	C:\pslf\pge\ramcohef2\draw\ram C:\pslf\pge\ramcohef2\cases\su Rating = 2

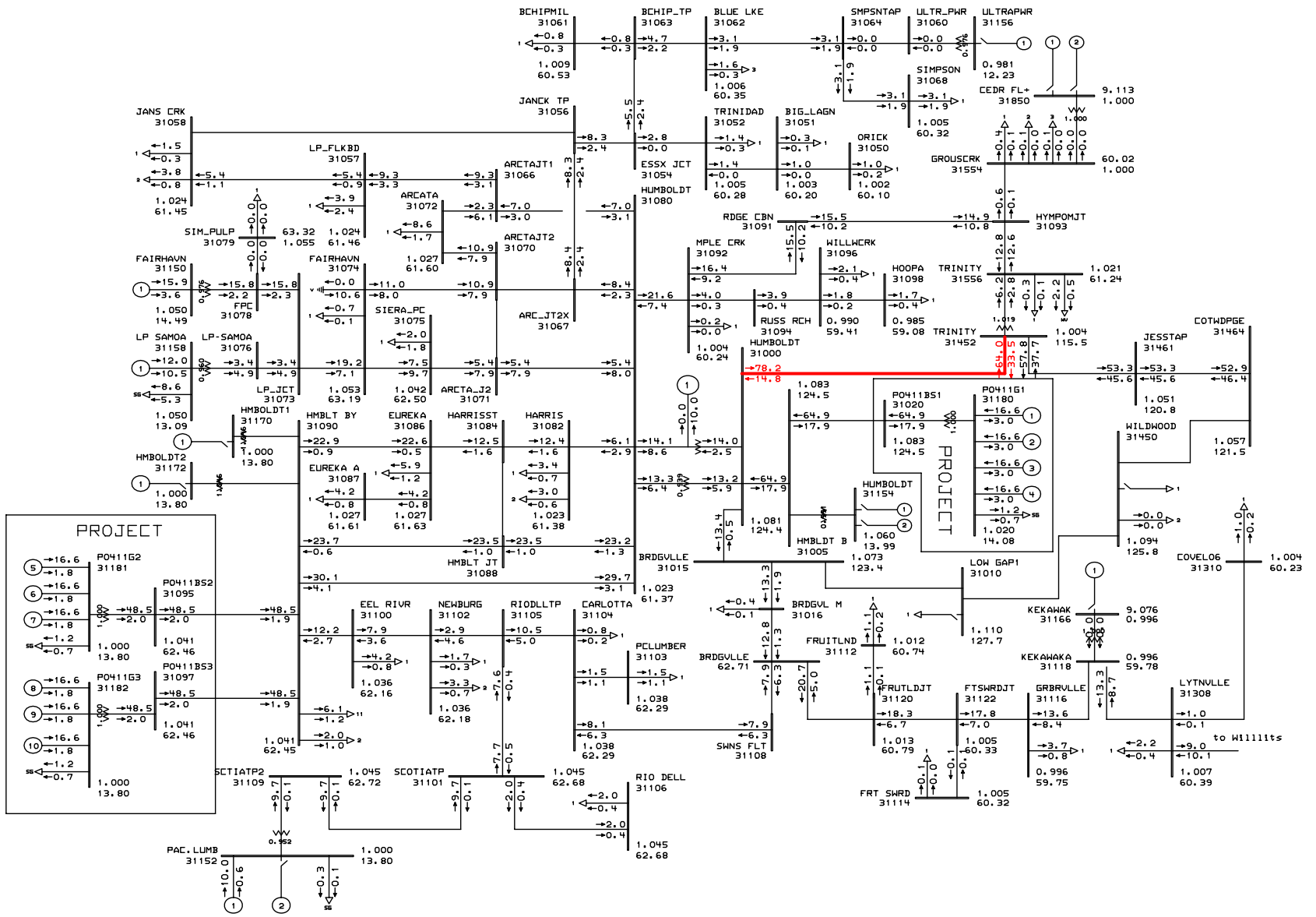

General Electric International, Inc. PSLF Program MW/MVAR Mon Dec 12 06:51:57 2005

PG&E Tranmission Planning	PG&E 2004 BASE CASE SERIES - 2008 Summer Off Peak Case Post-Project PATH15=4944MW(S-N) PATH26=-1785MW(N-S) PDCI=-1848MW(N-S) COI=-3636MW(N-S) RAMCO Humboldt Energy Facility SIS-2 Post-Project	Plot 23 - 2008 Summer Off Peak - Post-Project Outage: Brigdgeville - Cottonwood 115 kV Line	C:\pslf\pge\ramcohef2\draw\ram C:\pslf\pge\ramcohef2\cases\su Rating = 2

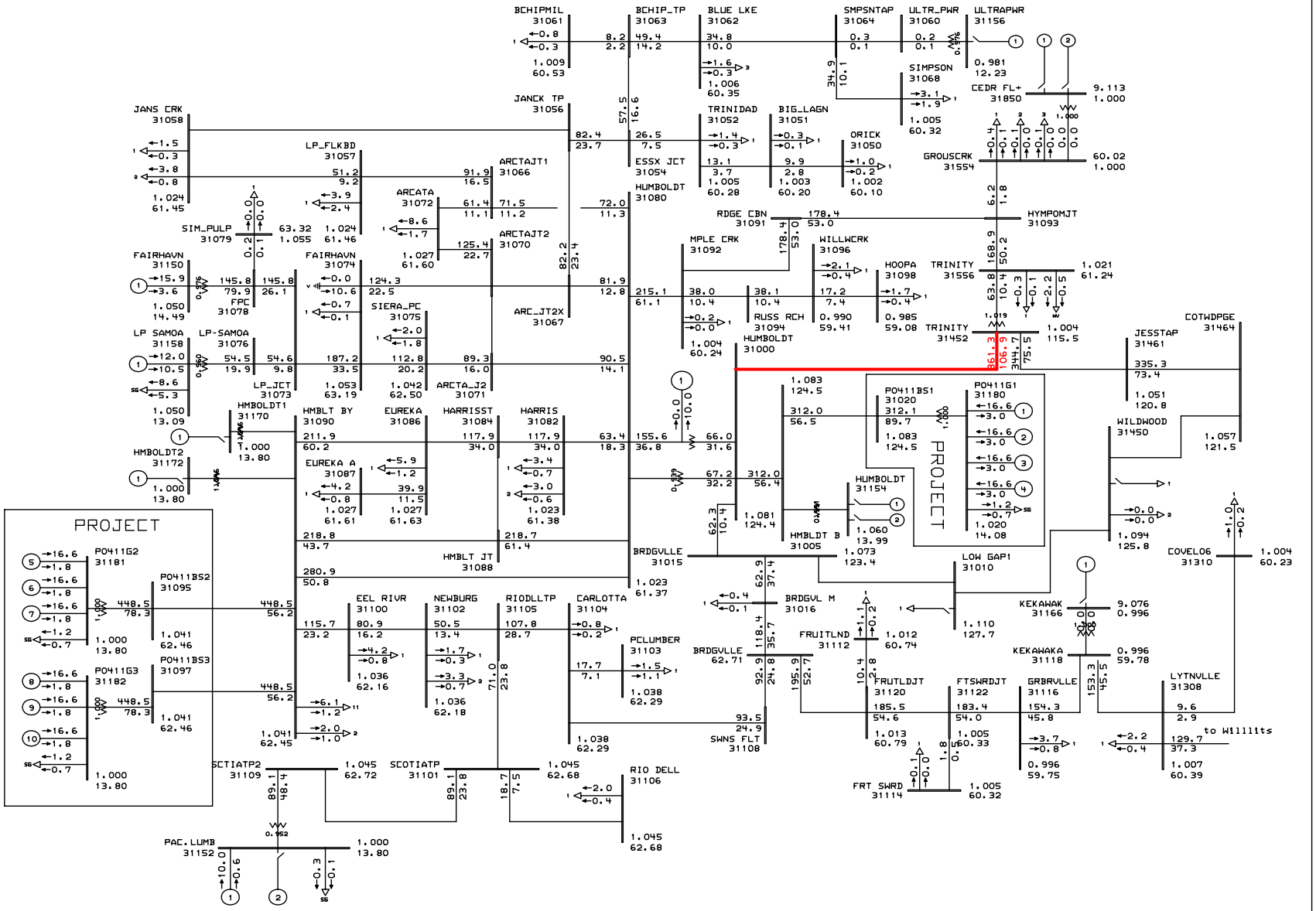

General Electric International, Inc. PSLF Program AMPS/Pct Mon Dec 12 06:51:57 2005

PG&E Tranmission Planning	PG&E 2004 BASE CASE SERIES - 2008 Summer Off Peak Case Post-Project PATH15=4944MW(S-N) PATH26=-1785MW(N-S) PDCI=-1848MW(N-S) COI=-3636MW(N-S) RAMCO Humboldt Energy Facility SIS-2 Post-Project	Plot 24 - 2008 Summer Off Peak - Post-Project Outage: Brigdgeville - Cottonwood 115 kV Line	C:\pslf\pge\ramcohef2\draw\ram C:\pslf\pge\ramcohef2\cases\su Rating = 2

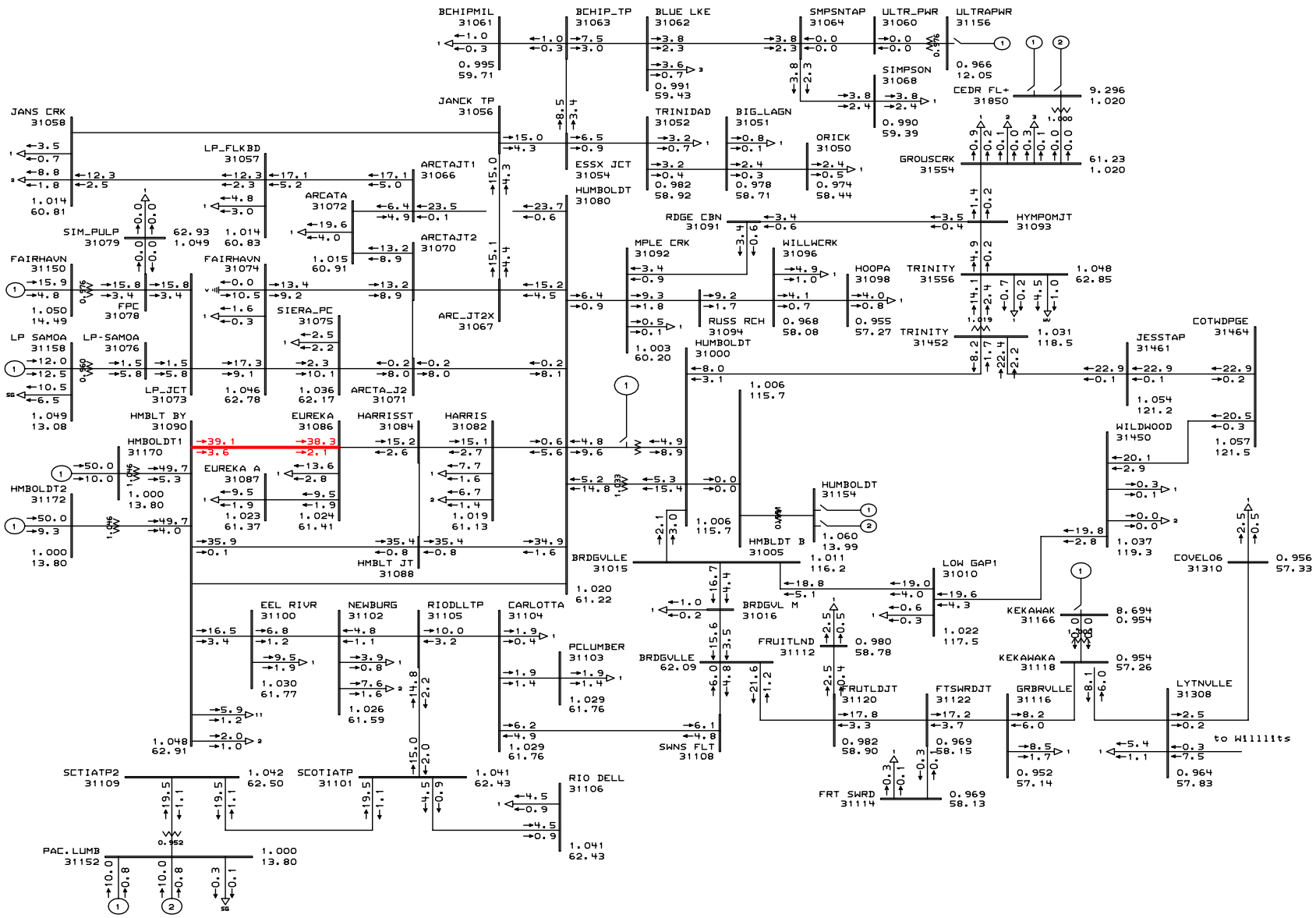

General Electric International, Inc. PSLF Program MW/MVAR Mon Dec 12 06:51:59 2005

PG&E Tranmission Planning	PG&E 2004 BASE CASE SERIES - 2008 Humboldt Summer Peak Case Pre-Project PATH15=-1616MW(S-N) PATH26=3335MW(N-S) PDCI=3104MW(N-S) COI=4738MW(N-S) RAMCO Humboldt Energy Facility SIS-2 Pre-project	Plot 25 - 2008 Summer Peak - Pre-Project Outage: Humboldt - Humboldt Bay #2 60 kV Line	C:\pslf\pge\ramcohef2\draw\ram C:\pslf\pge\ramcohef2\cases\su Rating = 2

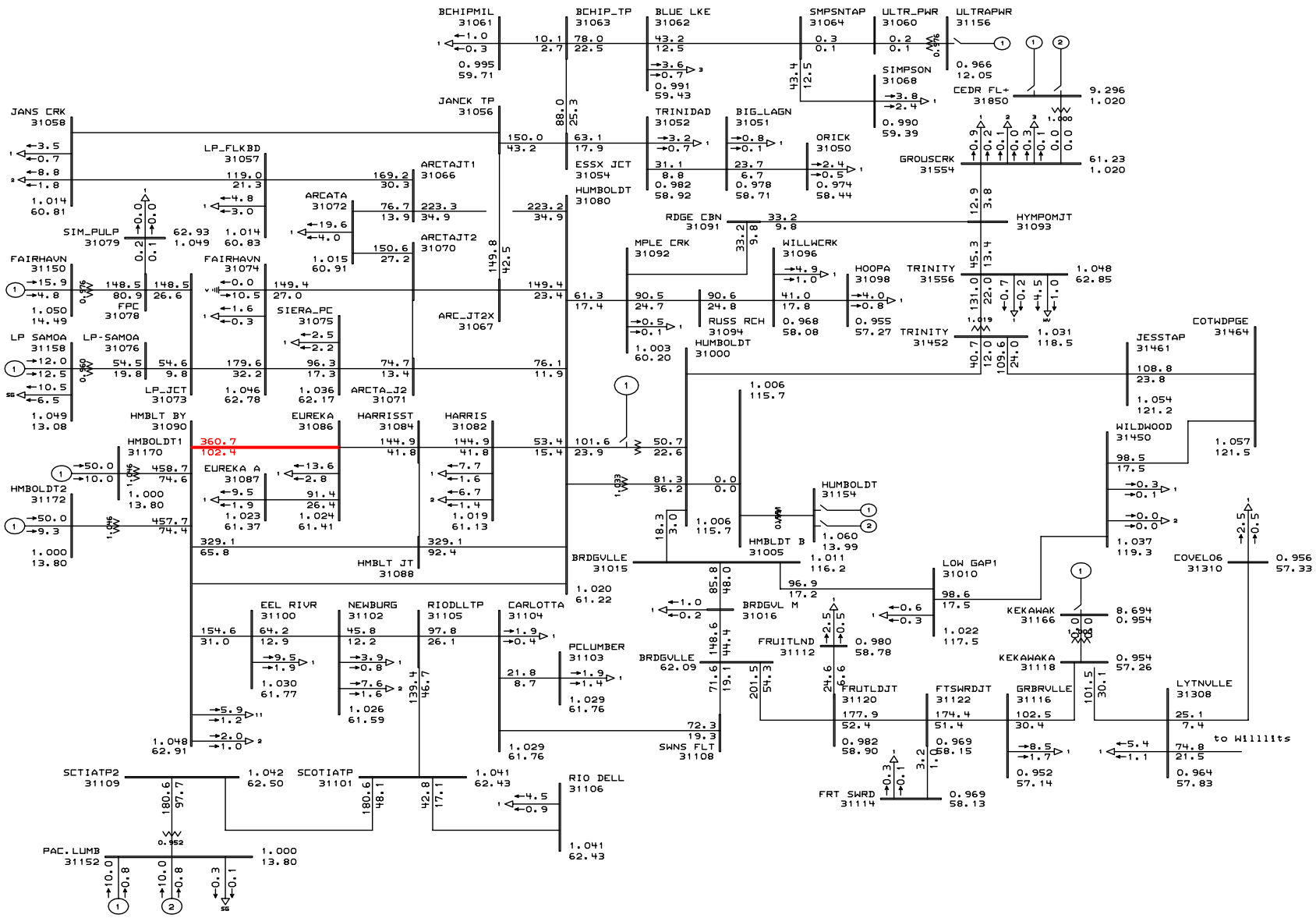

General Electric International, Inc. PSLF Program AMPS/Pct Mon Dec 12 06:51:59 2005

PG&E Tranmission Planning	PG&E 2004 BASE CASE SERIES - 2008 Humboldt Summer Peak Case Pre-Project PATH15=-1616MW(S-N) PATH26=3335MW(N-S) PDCI=3104MW(N-S) COI=4738MW(N-S) RAMCO Humboldt Energy Facility SIS-2 Pre-project	Plot 26 - 2008 Summer Peak - Pre-Project Outage: Humboldt - Humboldt Bay #2 60 kV Line	C:\pslf\pge\ramcohef2\draw\ram C:\pslf\pge\ramcohef2\cases\su Rating = 2

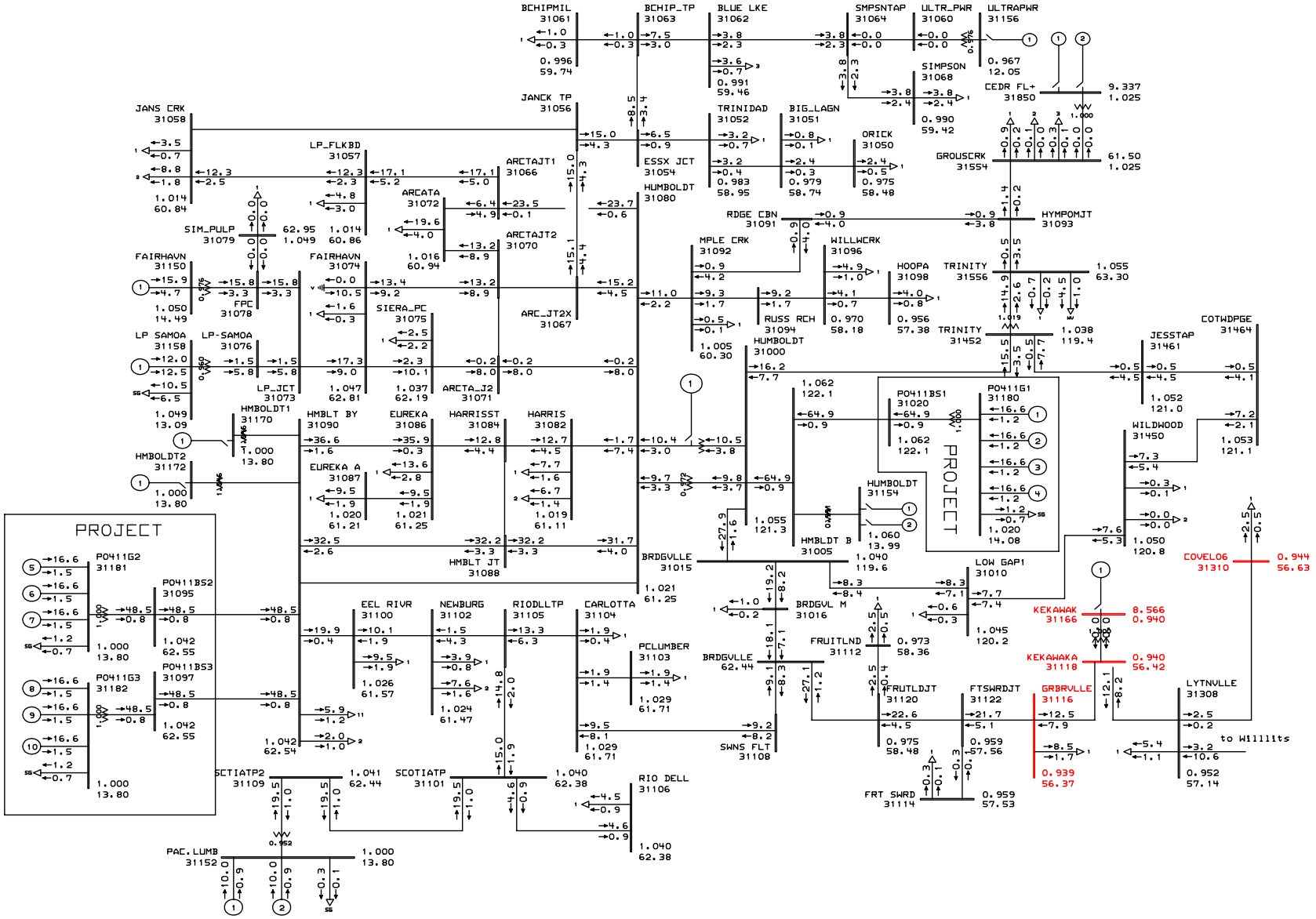

General Electric International, Inc. PSLF Program MW/MVAR Mon Dec 12 06:52:01 2005

PG&E Tranmission Planning	PG&E 2004 BASE CASE SERIES - 2008 Humboldt Summer Peak Case Post-Project PATH15=-1615MW(S-N) PATH26=3333MW(N-S) PDCI=3105MW(N-S) COI=4736MW(N-S) RAMCO Humboldt Energy Facility SIS-2 Post-Project	Plot 27 - 2008 Summer Peak - Post-Project Outage: Humboldt - Humboldt Bay #2 60 kV Line	C:\pslf\pge\ramcohef2\draw\ram C:\pslf\pge\ramcohef2\cases\su Rating = 2

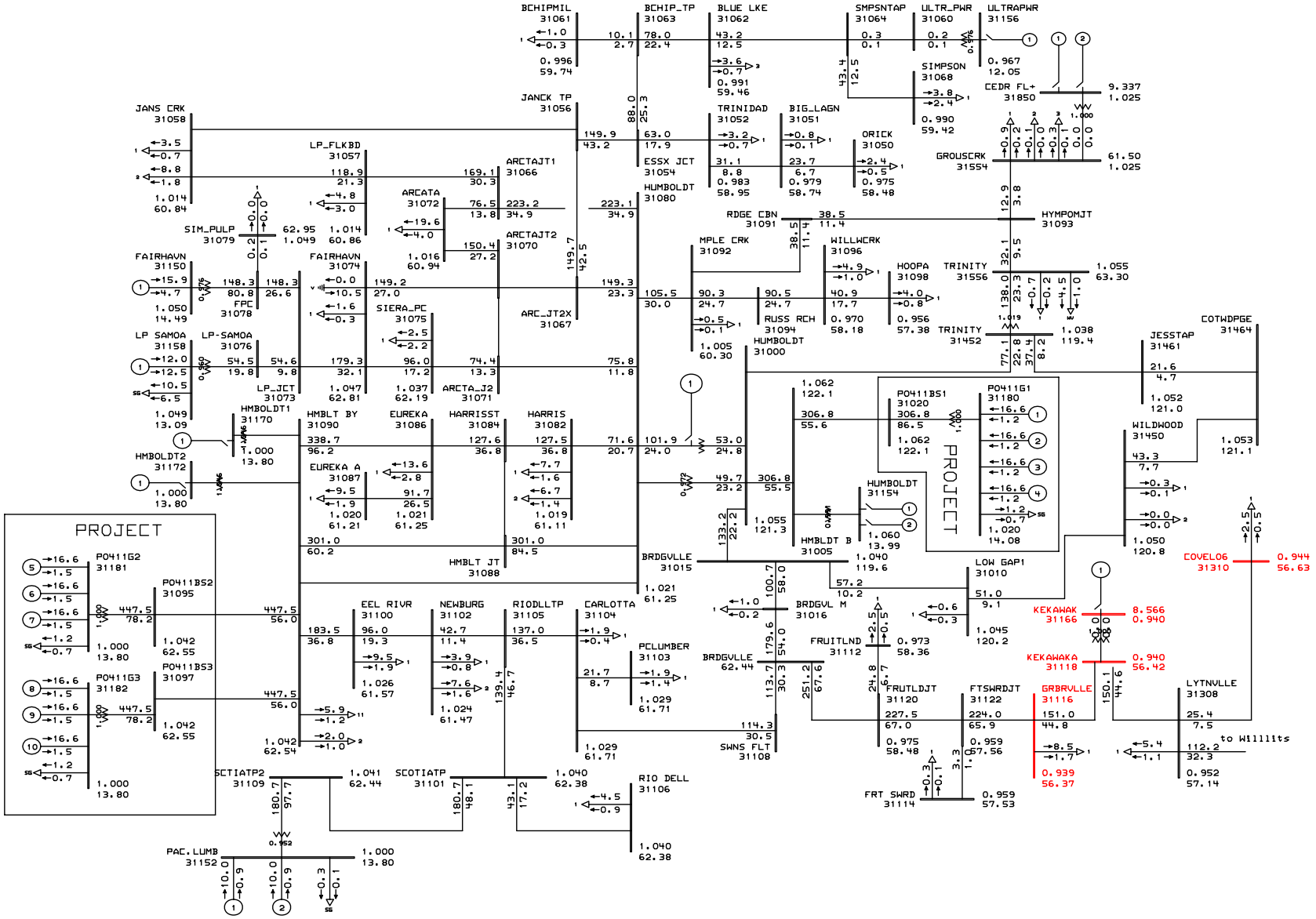

General Electric International, Inc. PSLF Program AMPS/Pct Mon Dec 12 06:52:01 2005

PG&E Tranmission Planning	PG&E 2004 BASE CASE SERIES - 2008 Humboldt Summer Peak Case Post-Project PATH15=-1615MW(S-N) PATH26=3333MW(N-S) PDCI=3105MW(N-S) COI=4736MW(N-S) RAMCO Humboldt Energy Facility SIS-2 Post-Project	Plot 28 - 2008 Summer Peak - Post-Project Outage: Humboldt - Humboldt Bay #2 60 kV Line	C:\pslf\pge\ramcohef2\draw\ram C:\pslf\pge\ramcohef2\cases\su Rating = 2

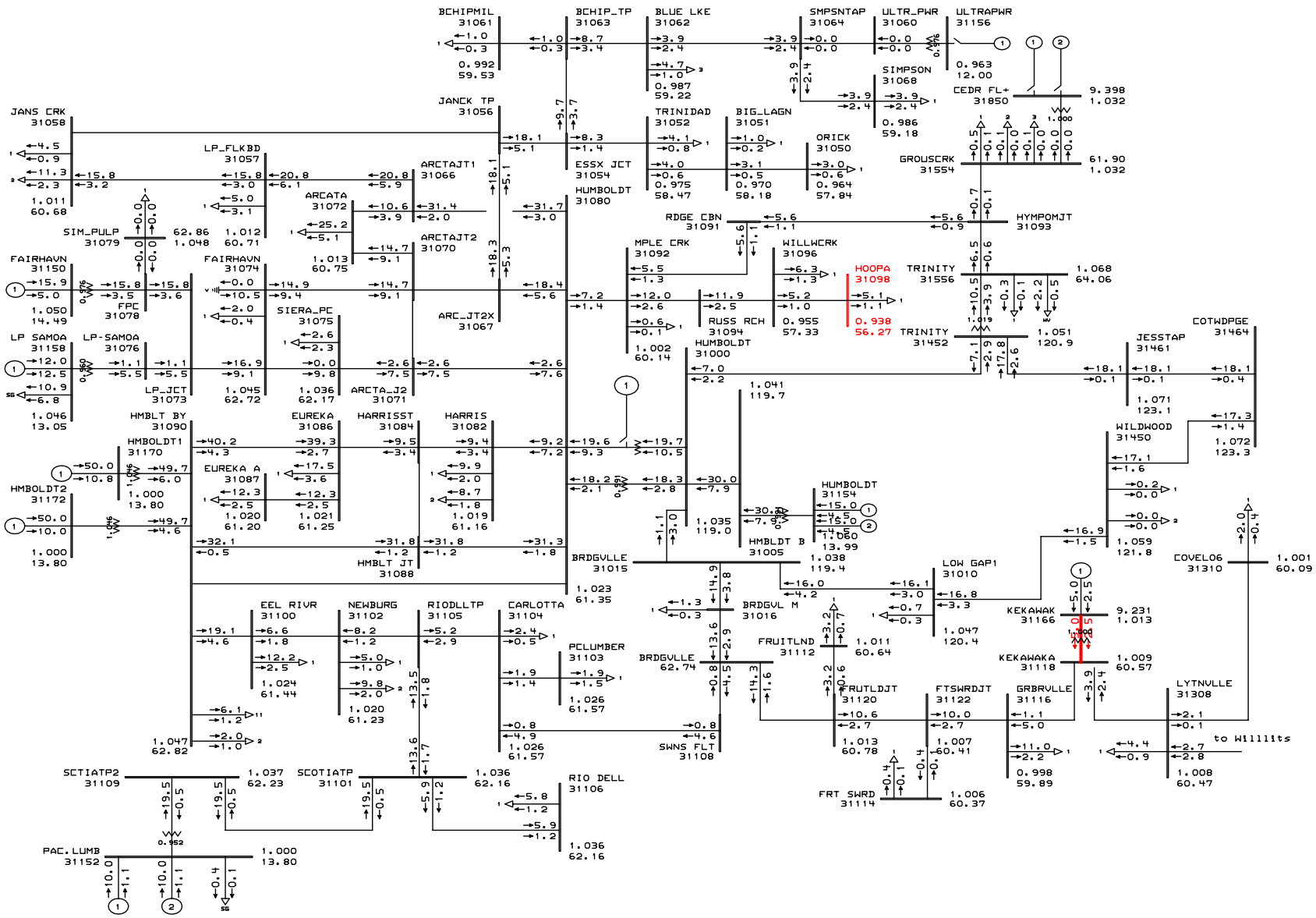

General Electric International, Inc. PSLF Program MW/MVAR Mon Dec 12 06:52:03 2005

PG&E Tranmission Planning	PG&E 2004 BASE CASE SERIES - 2008 Humboldt Winter Peak Case Pre-Project PATH15=3536MW(S-N) PATH26=-674MW(N-S) PDCI=-1845MW(N-S) COI=-3110MW(N-S) RAMCO Humboldt Energy Facility SIS-2 Pre-project	Plot 29 - 2008 Winter Peak - Pre-Project Outage: Humboldt - Humboldt Bay #2 60 kV Line	C:\pslf\pge\ramcohef2\draw\ram C:\pslf\pge\ramcohef2\cases\wi Rating = 4

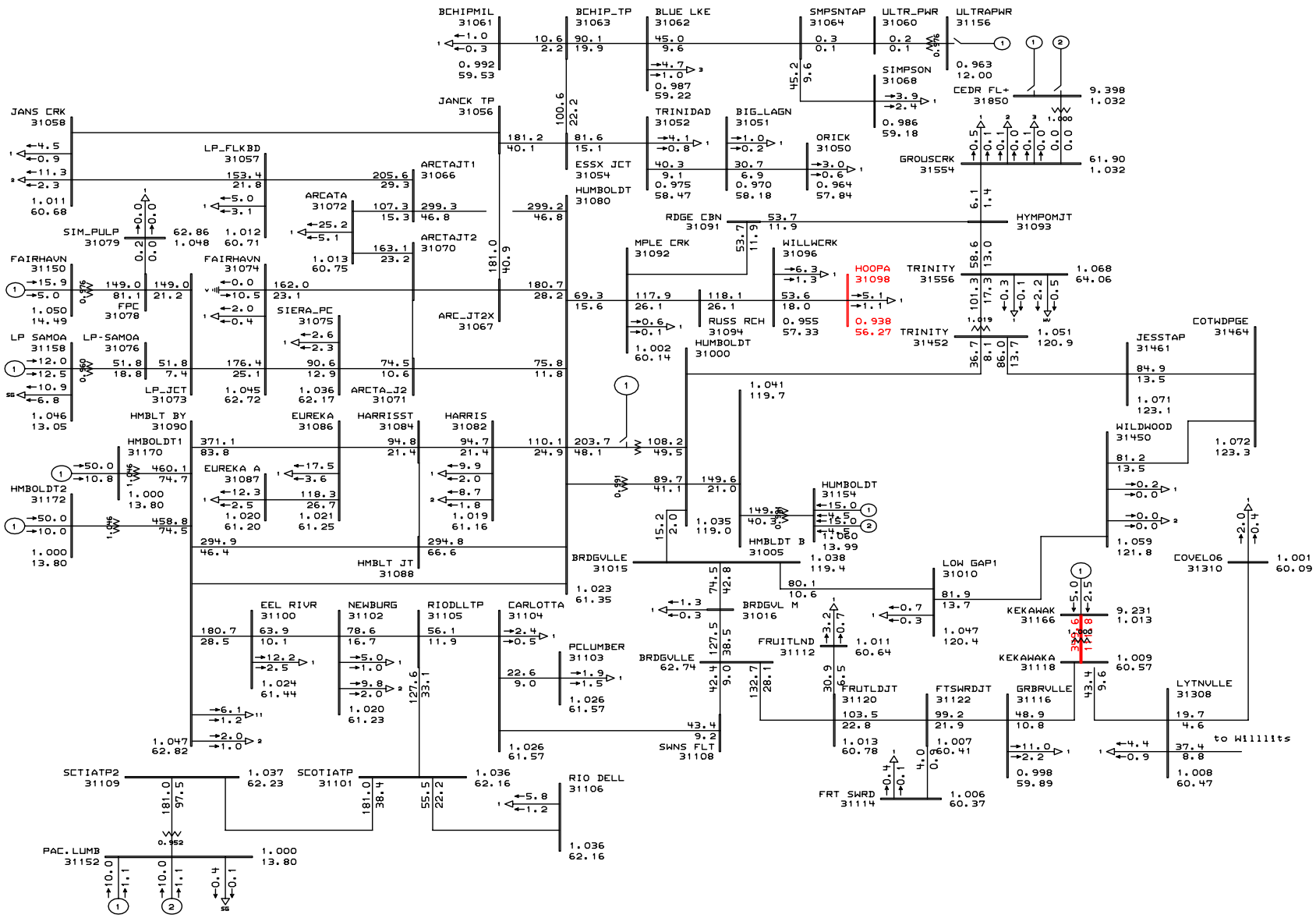

General Electric International, Inc. PSLF Program AMPS/Pct Mon Dec 12 06:52:03 2005

PG&E Tranmission Planning	PG&E 2004 BASE CASE SERIES - 2008 Humboldt Winter Peak Case Pre-Project PATH15=3536MW(S-N) PATH26=-674MW(N-S) PDCI=-1845MW(N-S) COI=-3110MW(N-S) RAMCO Humboldt Energy Facility SIS-2 Pre-project	Plot 30 - 2008 Winter Peak - Pre-Project Outage: Humboldt - Humboldt Bay #2 60 kV Line	C:\pslf\pge\ramcohef2\draw\ram C:\pslf\pge\ramcohef2\cases\wi Rating = 4

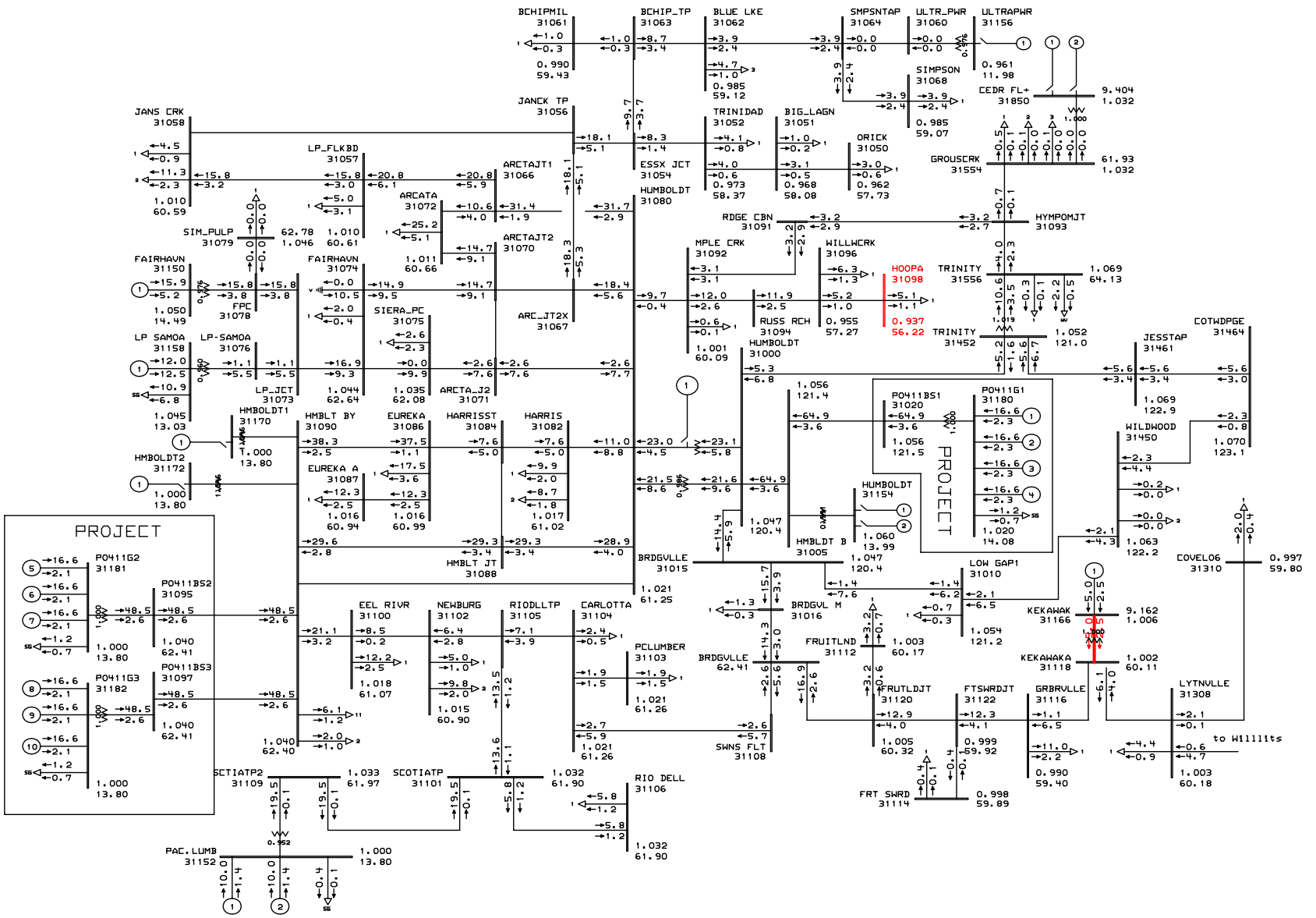

General Electric International, Inc. PSLF Program MW/MVAR Mon Dec 12 06:52:05 2005

PG&E Tranmission Planning	PG&E 2004 BASE CASE SERIES - 2008 Humboldt Winter Peak Case Post-Project PATH15=3536MW(S-N) PATH26=-675MW(N-S) PDCI=-1845MW(N-S) COI=-3110MW(N-S) RAMCO Humboldt Energy Facility SIS-2 Post-Project	Plot 31 - 2008 Winter Peak - Post-Project Outage: Humboldt - Humboldt Bay #2 60 kV Line	C:\pslf\pge\ramcohef2\draw\ram C:\pslf\pge\ramcohef2\cases\wi Rating = 4

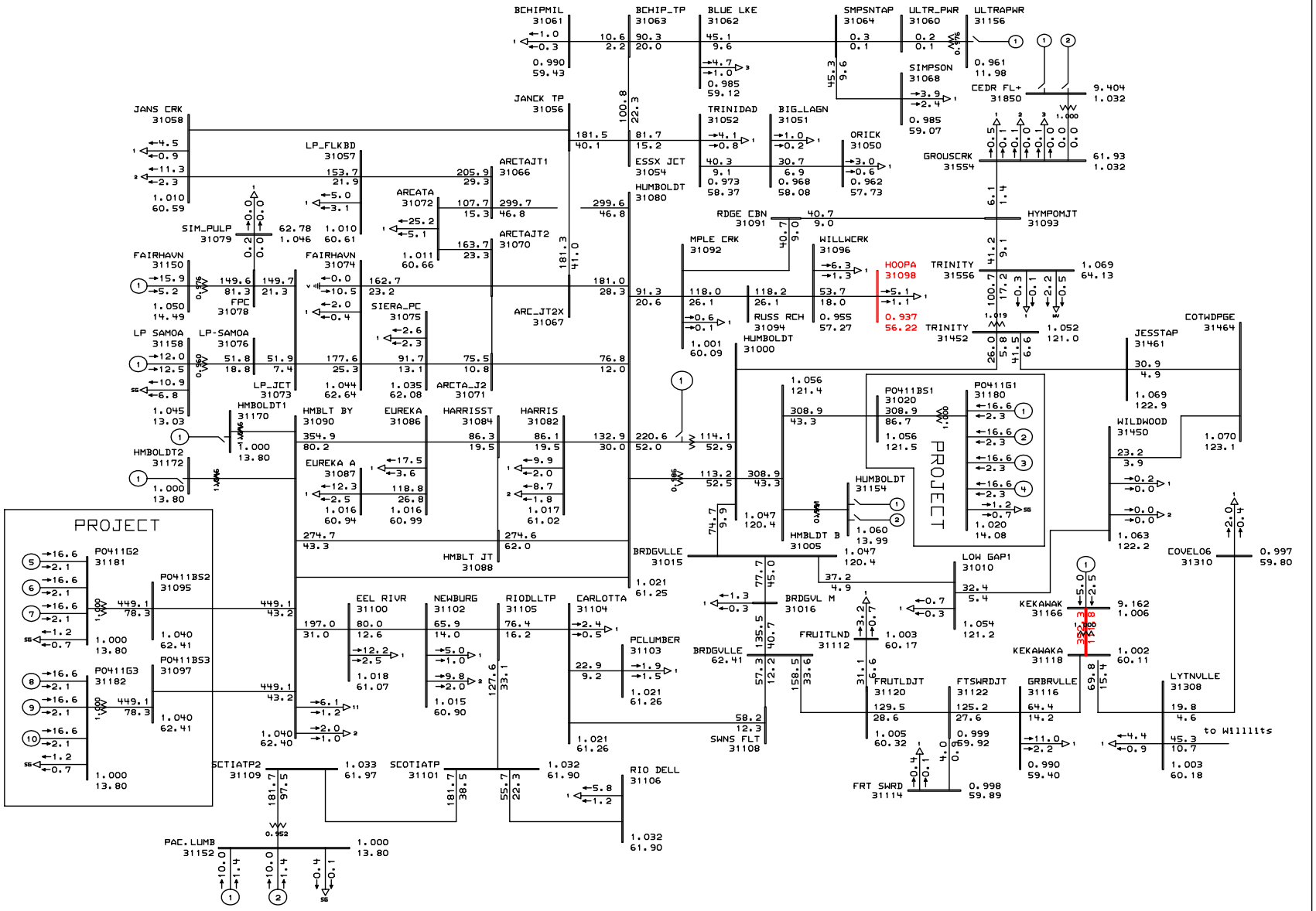

General Electric International, Inc. PSLF Program AMPS/Pct Mon Dec 12 06:52:06 2005

PG&E Tranmission Planning	PG&E 2004 BASE CASE SERIES - 2008 Humboldt Winter Peak Case Post-Project PATH15=3536MW(S-N) PATH26=-675MW(N-S) PDCI=-1845MW(N-S) COI=-3110MW(N-S) RAMCO Humboldt Energy Facility SIS-2 Post-Project	Plot 32 - 2008 Winter Peak - Post-Project Outage: Humboldt - Humboldt Bay #2 60 kV Line	C:\pslf\pge\ramcohef2\draw\ram C:\pslf\pge\ramcohef2\cases\wi Rating = 4

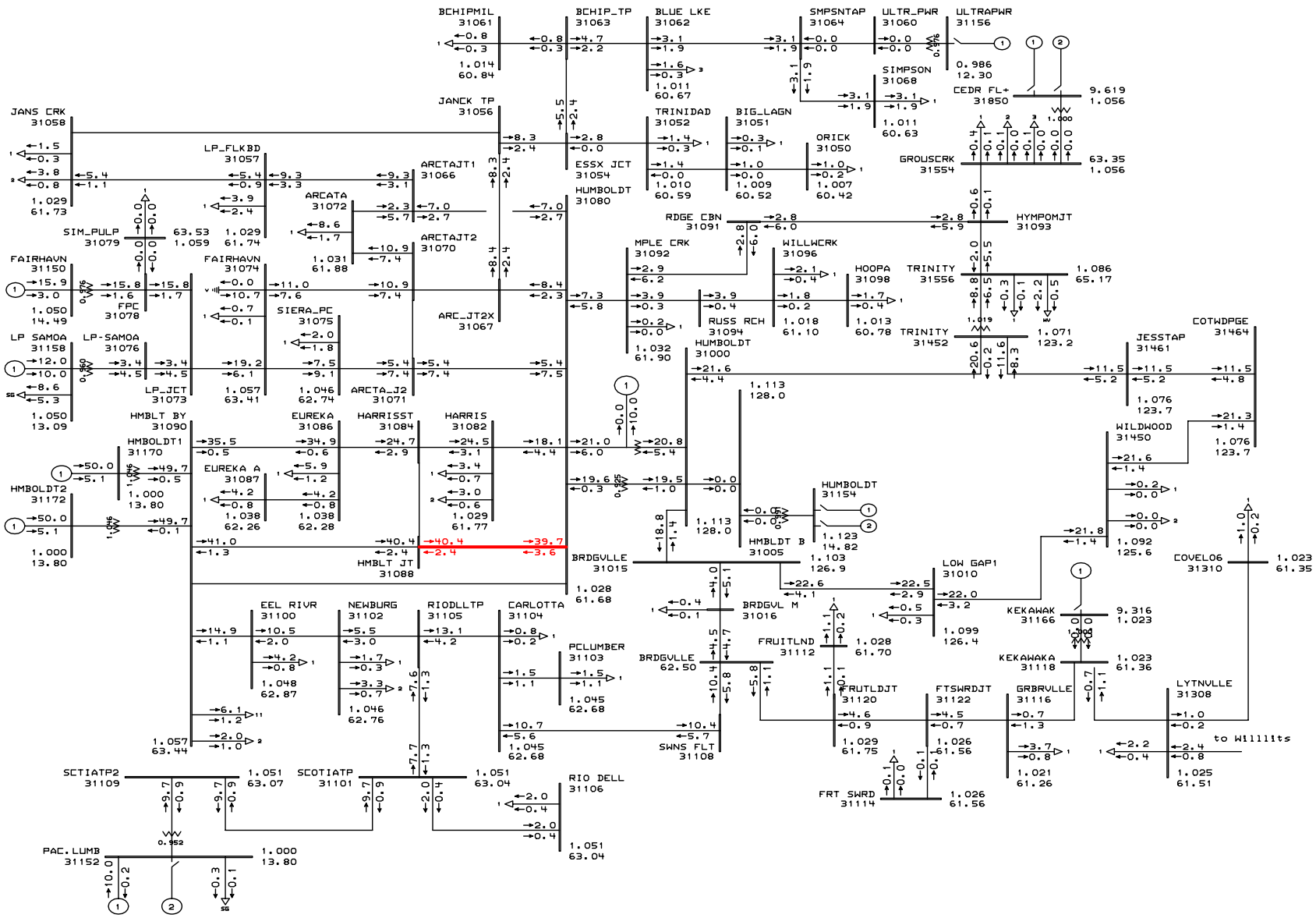

General Electric International, Inc. PSLF Program MW/MVAR Mon Dec 12 06:52:07 2005

PG&E Tranmission Planning	PG&E 2004 BASE CASE SERIES - 2008 Summer Off Peak Case Pre-Project PATH15=4943MW(S-N) PATH26=-1783MW(N-S) PDCI=-1848MW(N-S) COI=-3638MW(N-S) RAMCO Humboldt Energy Facility SIS-2 Pre-project	Plot 33 - 2008 Summer Off Peak - Pre-Project Outage: Humboldt - Humboldt Bay #2 60 kV Line	C:\pslf\pge\ramcohef2\draw\ram C:\pslf\pge\ramcohef2\cases\su Rating = 2

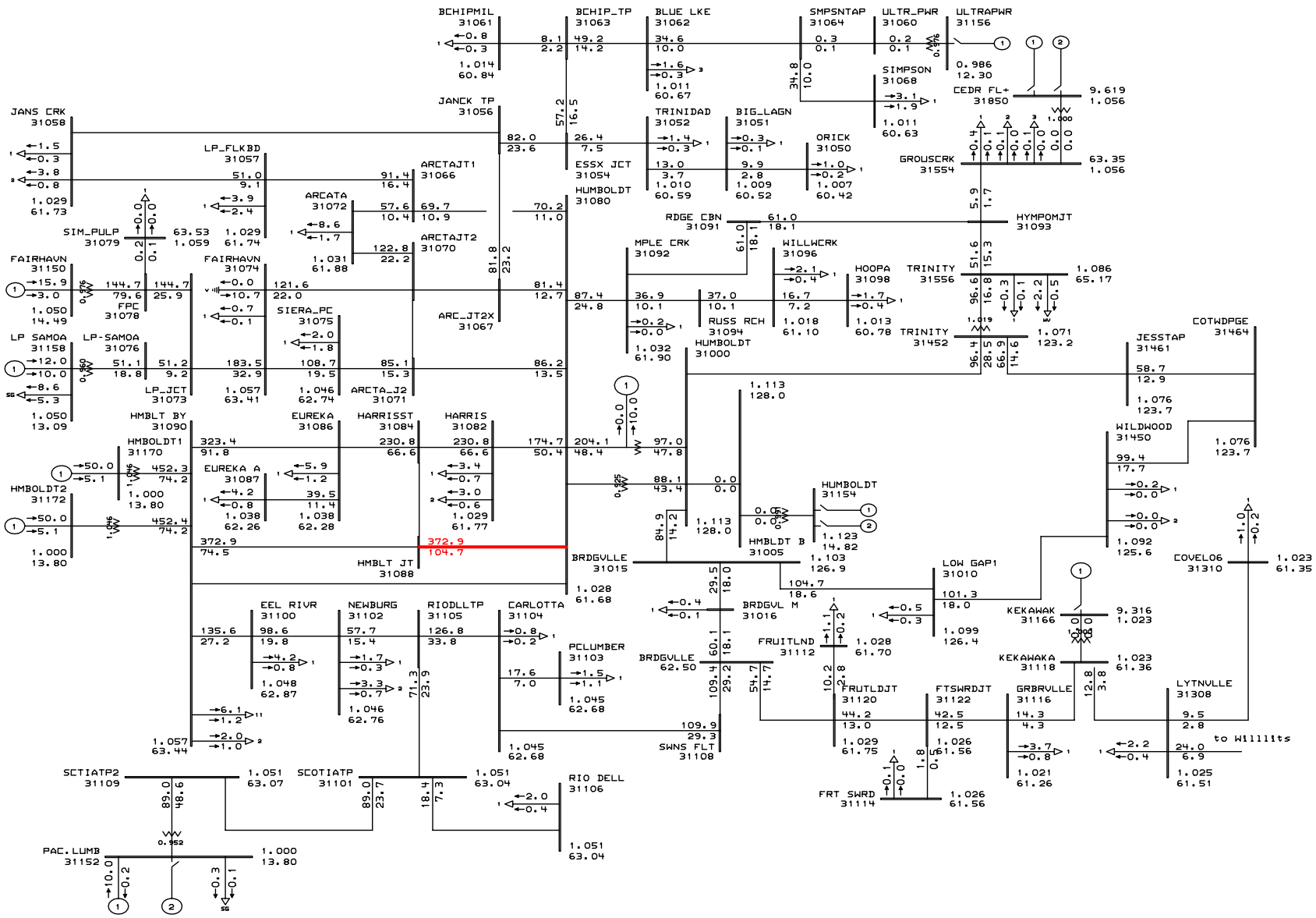

General Electric International, Inc. PSLF Program AMPS/Pct Mon Dec 12 06:52:07 2005

PG&E Tranmission Planning	PG&E 2004 BASE CASE SERIES - 2008 Summer Off Peak Case Pre-Project PATH15=4943MW(S-N) PATH26=-1783MW(N-S) PDCI=-1848MW(N-S) COI=-3638MW(N-S) RAMCO Humboldt Energy Facility SIS-2 Pre-project	Plot 34 - 2008 Summer Off Peak - Pre-Project Outage: Humboldt - Humboldt Bay #2 60 kV Line	C:\pslf\pge\ramcohef2\draw\ram C:\pslf\pge\ramcohef2\cases\su Rating = 2

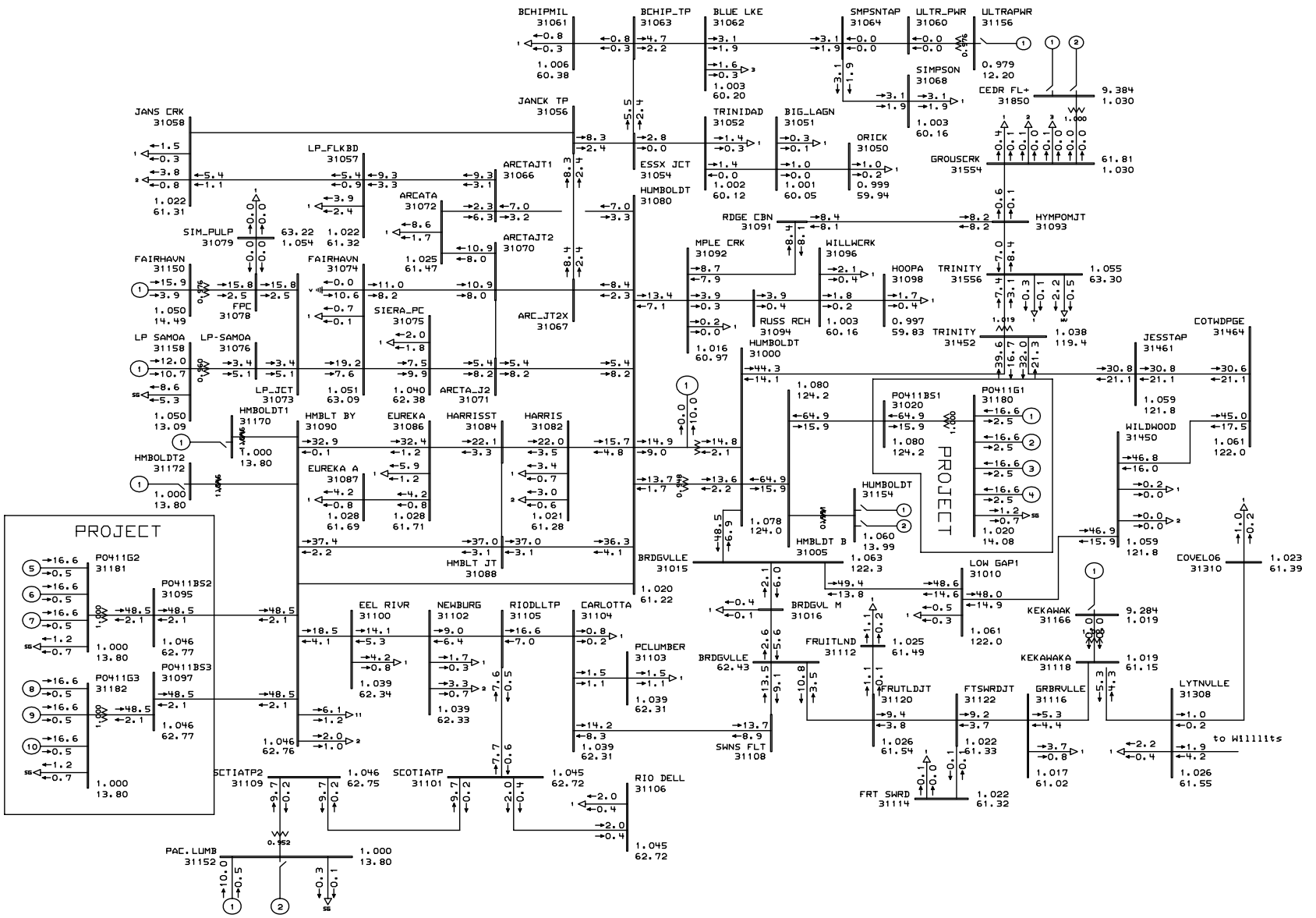

General Electric International, Inc. PSLF Program MW/MVAR Mon Dec 12 06:52:10 2005

PG&E Tranmission Planning	PG&E 2004 BASE CASE SERIES - 2008 Summer Off Peak Case Post-Project PATH15=4944MW(S-N) PATH26=-1785MW(N-S) PDCI=-1848MW(N-S) COI=-3636MW(N-S) RAMCO Humboldt Energy Facility SIS-2 Post-Project	Plot 35 - 2008 Summer Off Peak - Post-Project Outage: Humboldt - Humboldt Bay #2 60 kV Line	C:\pslf\pge\ramcohef2\draw\ram C:\pslf\pge\ramcohef2\cases\su Rating = 2

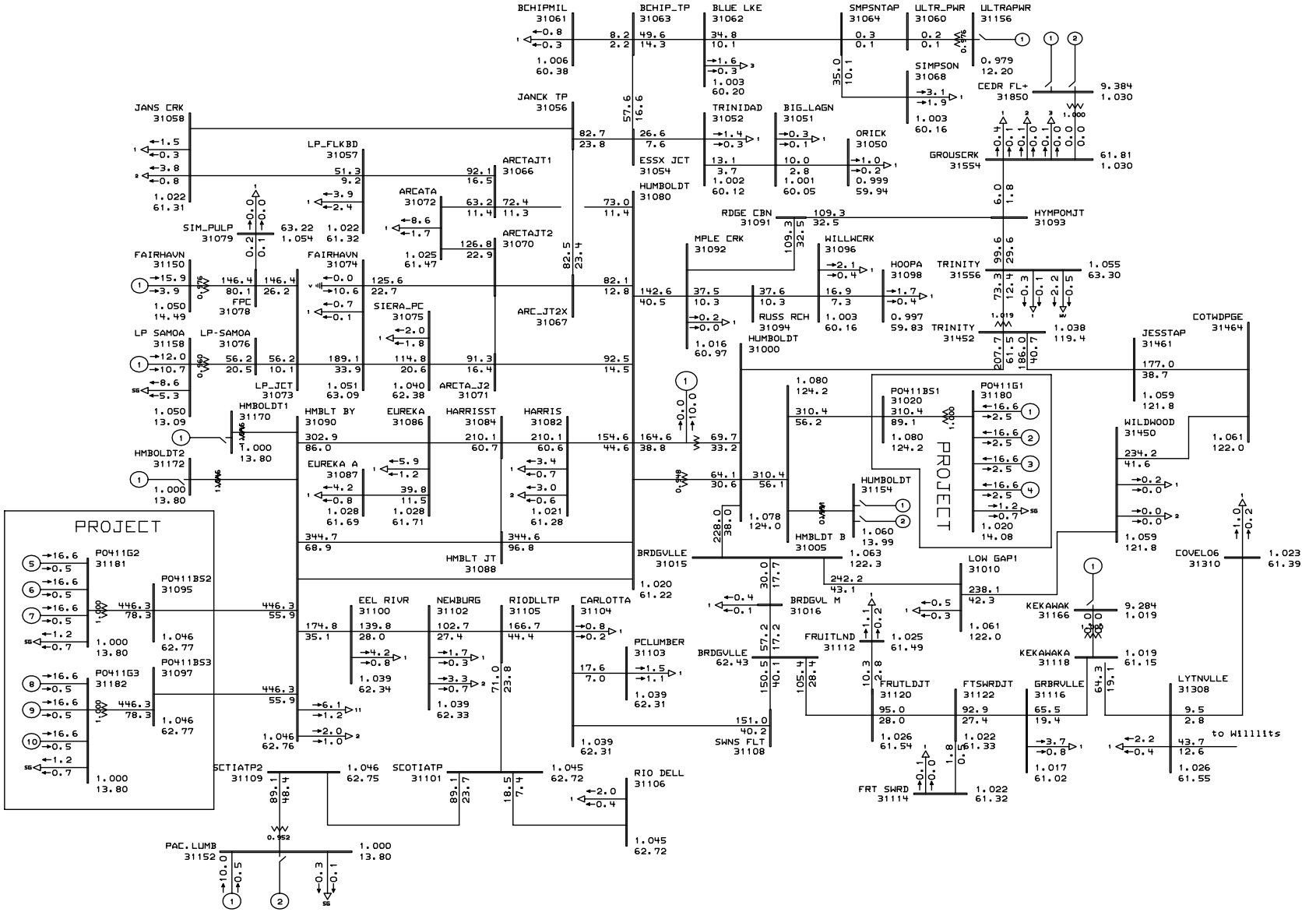

General Electric International, Inc. PSLF Program AMPS/Pct Mon Dec 12 06:52:10 2005

PG&E Tranmission Planning	PG&E 2004 BASE CASE SERIES - 2008 Summer Off Peak Case Post-Project PATH15=4944MW(S-N) PATH26=-1785MW(N-S) PDCI=-1848MW(N-S) COI=-3636MW(N-S) RAMCO Humboldt Energy Facility SIS-2 Post-Project	Plot 36 - 2008 Summer Off Peak - Post-Project Outage: Humboldt - Humboldt Bay #2 60 kV Line	C:\pslf\pge\ramcohef2\draw\ram C:\pslf\pge\ramcohef2\cases\su Rating = 2

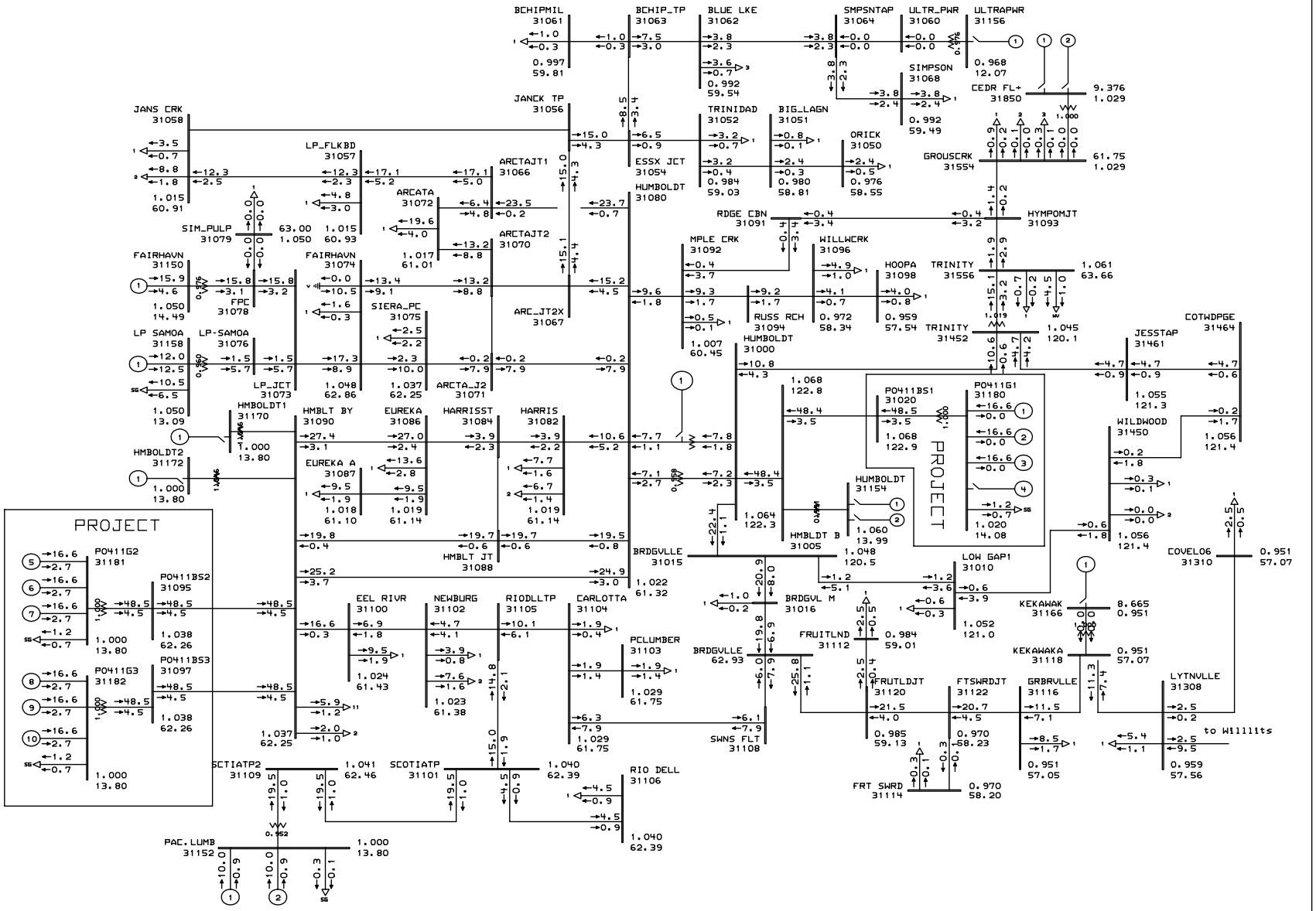

General Electric International, Inc. PSLF Program MW/MVAR Mon Dec 12 06:52:10 2005

PG&E Tranmission Planning	PG&E 2004 BASE CASE SERIES - 2008 Humboldt Summer Peak Case Post-Project PATH15=-1615MW(S-N) PATH26=3333MW(N-S) PDCI=3105MW(N-S) COI=4736MW(N-S) RAMCO Humboldt Energy Facility SIS-2 Post-Project Mitigation 1	Plot 37 - 2008 Summer Peak Normal Conditions - Post-Project Mitigation 1 - Generation Reduction	C:\pslf\pge\ramcohef2\draw\ram C:\pslf\pge\ramcohef2\cases\su Rating = 1

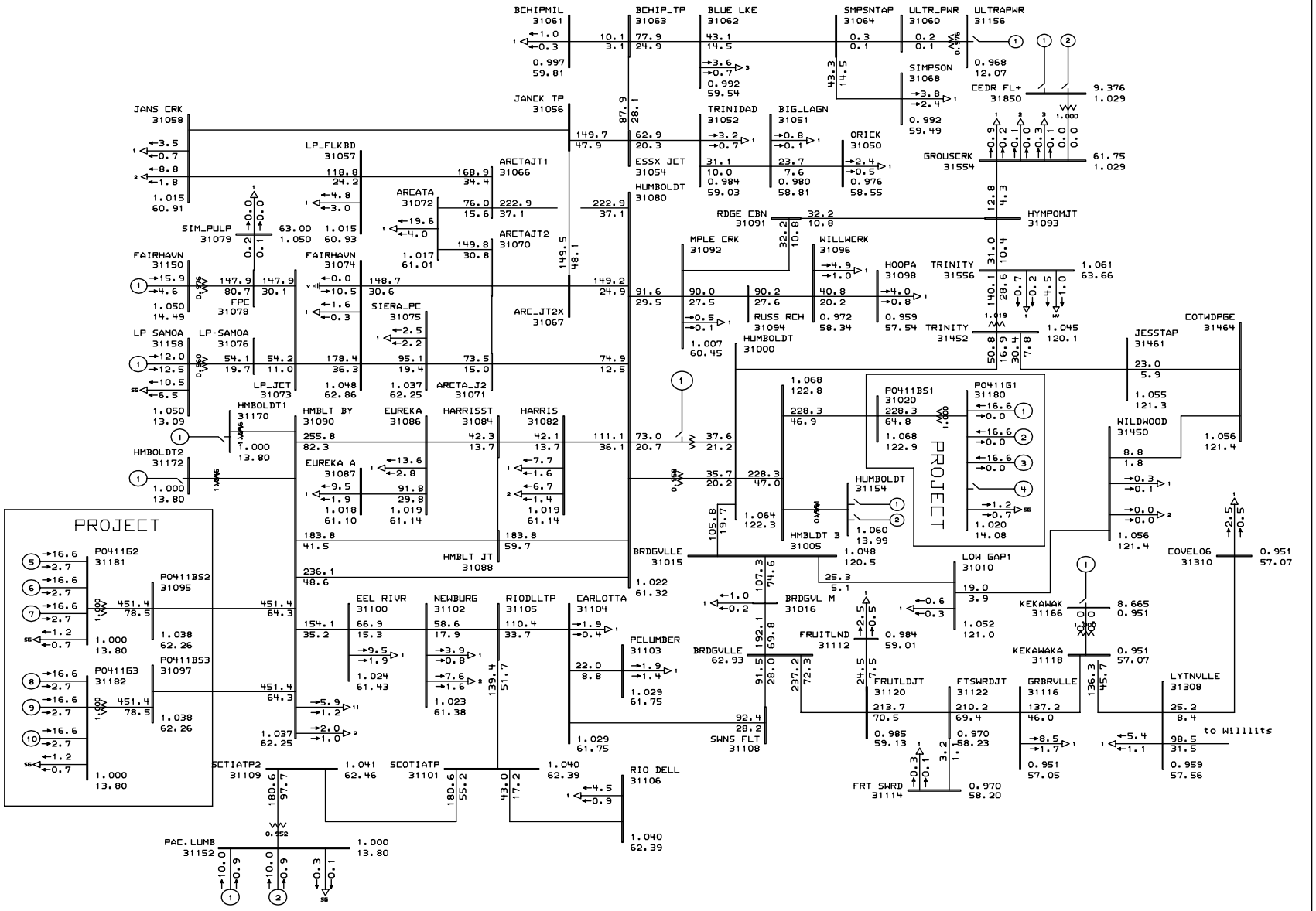

General Electric International, Inc. PSLF Program AMPS/Pct Mon Dec 12 06:52:10 2005

PG&E Tranmission Planning	PG&E 2004 BASE CASE SERIES - 2008 Humboldt Summer Peak Case Post-Project PATH15=-1615MW(S-N) PATH26=3333MW(N-S) PDCI=3105MW(N-S) COI=4736MW(N-S) RAMCO Humboldt Energy Facility SIS-2 Post-Project Mitigation 1	Plot 38 - 2008 Summer Peak Normal Conditions - Post-Project Mitigation 1 - Generation Reduction	C:\pslf\pge\ramcohef2\draw\ram C:\pslf\pge\ramcohef2\cases\su Rating = 1

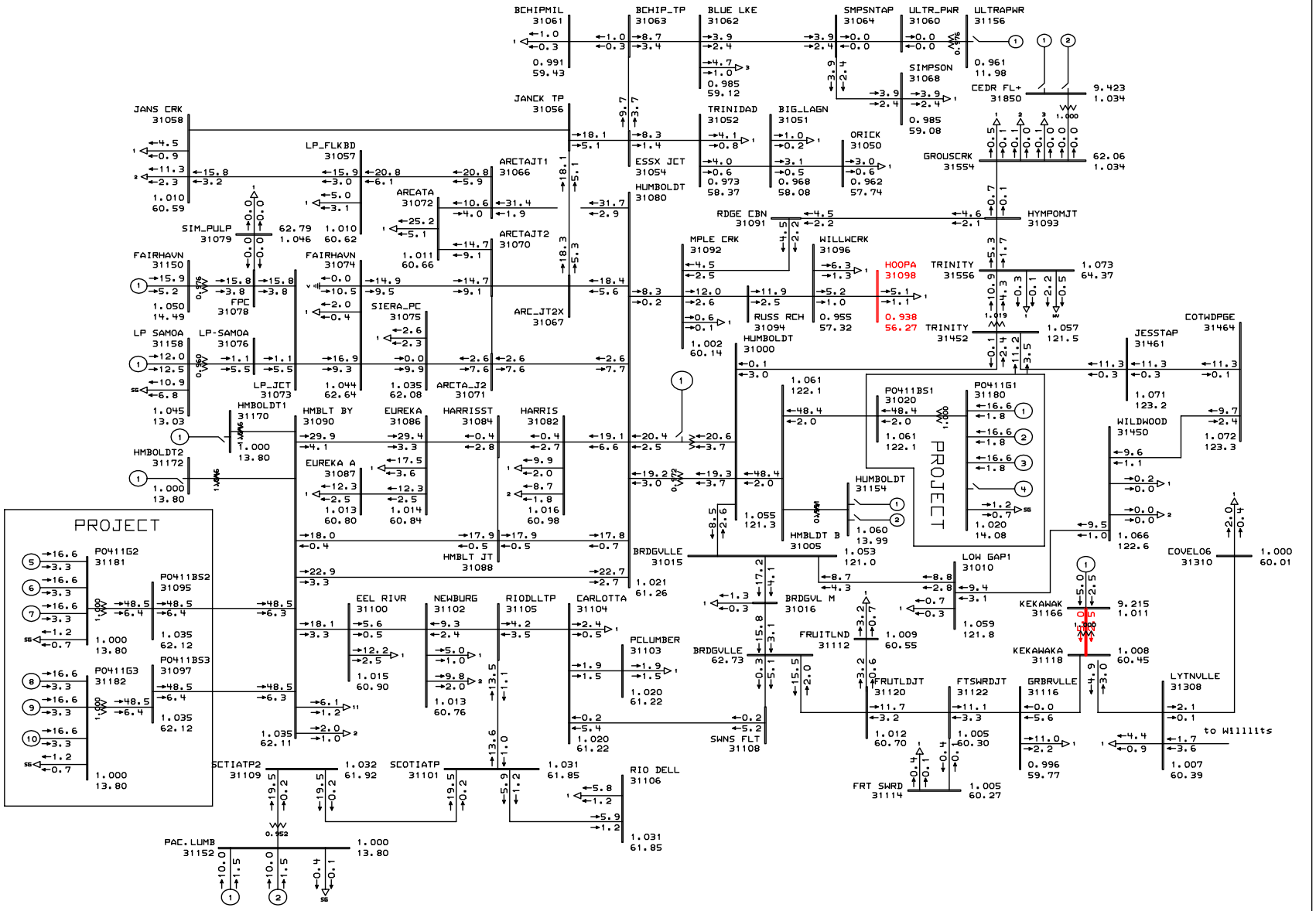

General Electric International, Inc. PSLF Program MW/MVAR Mon Dec 12 06:52:10 2005

PG&E Tranmission Planning	PG&E 2004 BASE CASE SERIES - 2008 Humboldt Winter Peak Case Post-Project PATH15=3536MW(S-N) PATH26=-675MW(N-S) PDCI=-1845MW(N-S) COI=-3110MW(N-S) RAMCO Humboldt Energy Facility SIS-2 Post-Project Mitigation 1	Plot 39 - 2008 Winter Peak Normal Conditions - Post-Project Mitigation 1 - Generation Reduction	C:\pslf\pge\ramcohef2\draw\ram C:\pslf\pge\ramcohef2\cases\wi Rating = 3

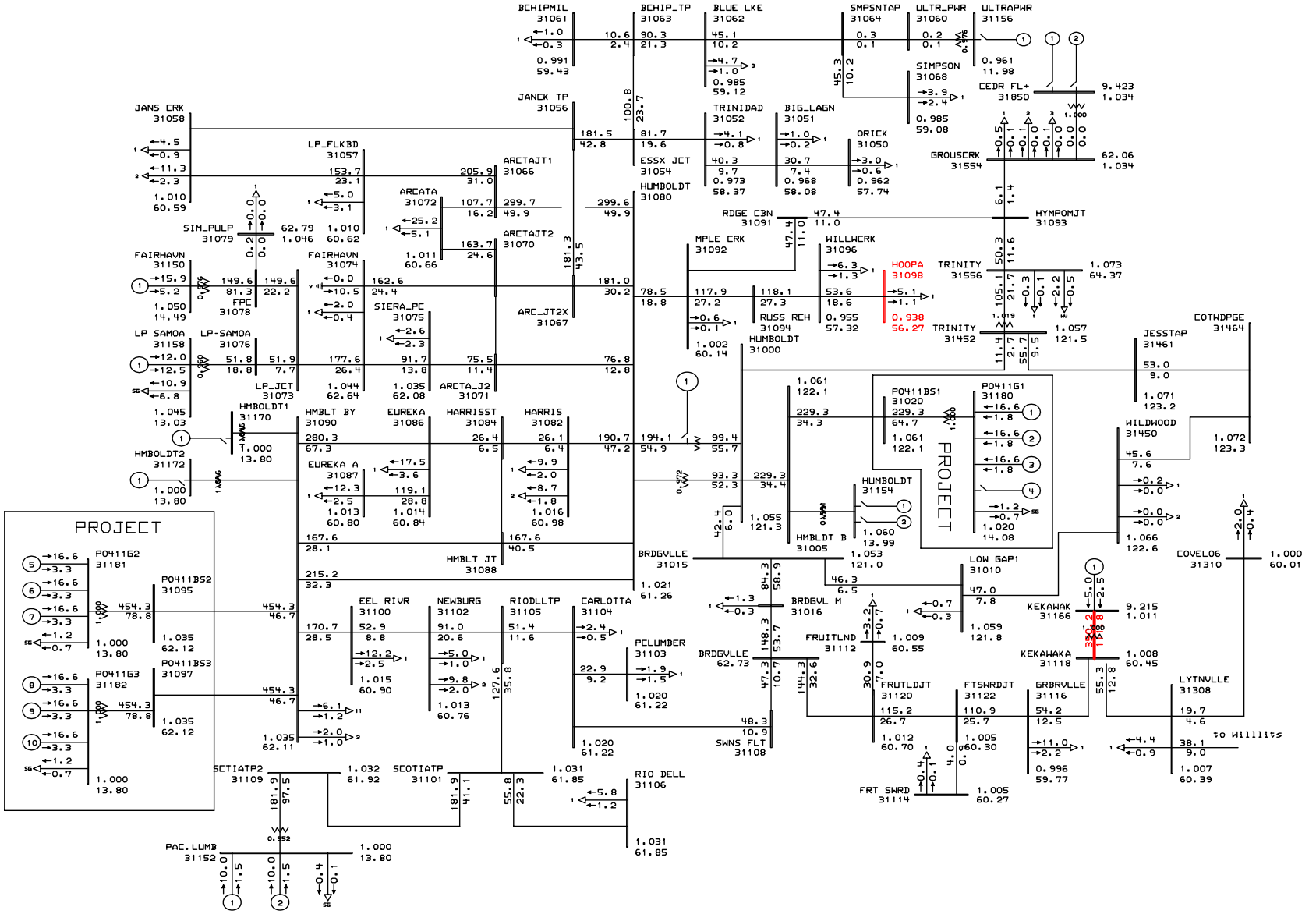

General Electric International, Inc. PSLF Program AMPS/Pct Mon Dec 12 06:52:11 2005

PG&E Tranmission Planning	PG&E 2004 BASE CASE SERIES - 2008 Humboldt Winter Peak Case Post-Project PATH15=3536MW(S-N) PATH26=-675MW(N-S) PDCI=-1845MW(N-S) COI=-3110MW(N-S) RAMCO Humboldt Energy Facility SIS-2 Post-Project Mitigation 1	Plot 40 - 2008 Winter Peak Normal Conditions - Post-Project Mitigation 1 - Generation Reduction	C:\pslf\pge\ramcohef2\draw\ram C:\pslf\pge\ramcohef2\cases\wi Rating = 3

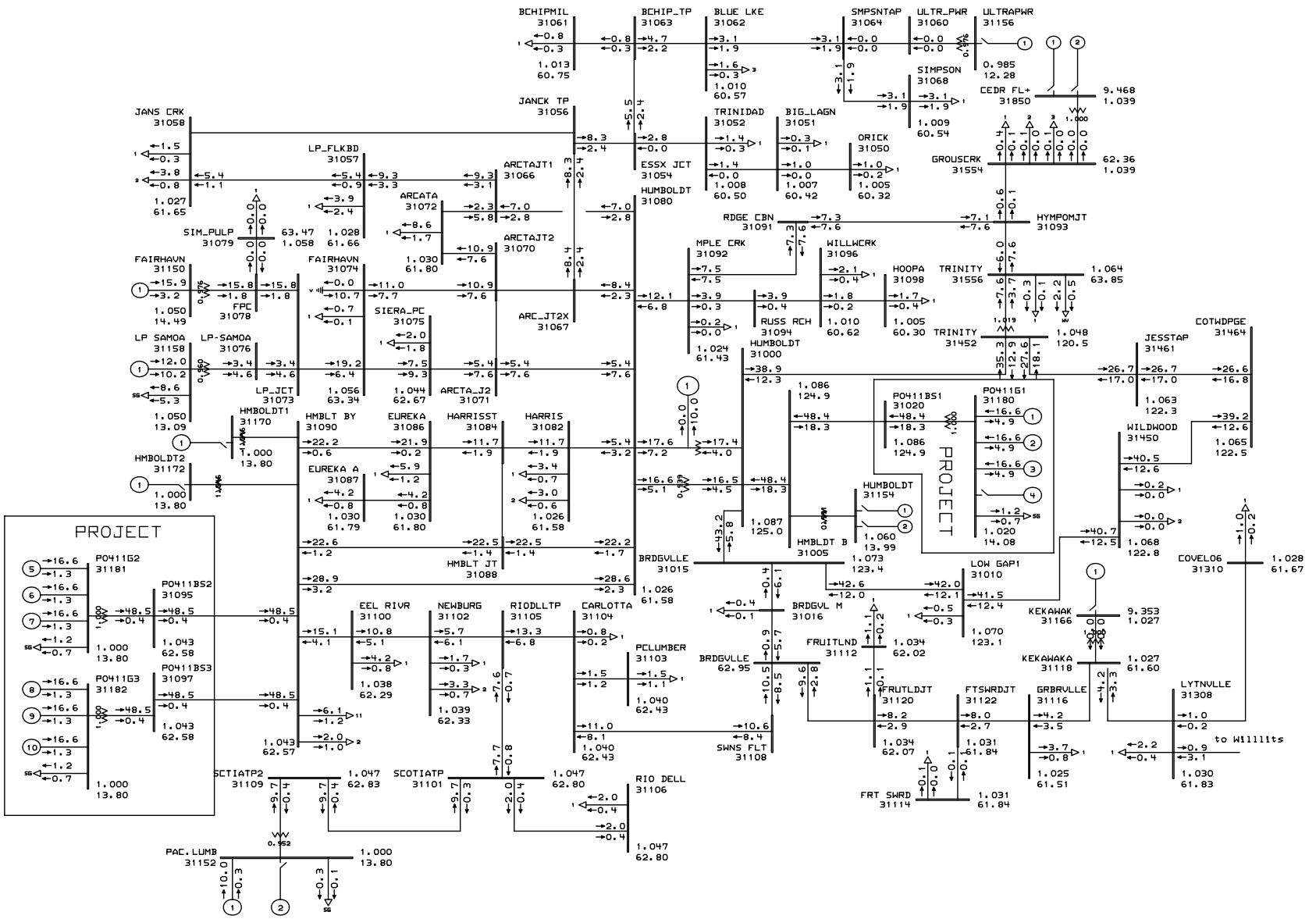

General Electric International, Inc. PSLF Program MW/MVAR Mon Dec 12 06:52:11 2005

PG&E Tranmission Planning	PG&E 2004 BASE CASE SERIES - 2008 Summer Off Peak Case Post-Project PATH15=4944MW(S-N) PATH26=-1785MW(N-S) PDCI=-1848MW(N-S) COI=-3636MW(N-S) RAMCO Humboldt Energy Facility SIS-2 Post-Project Mitigation 1	Plot 41 - 2008 Summer Off Peak Normal Conditions - Post-Project Mitigation 1 - Generation Reduction	C:\pslf\pge\ramcohef2\draw\ram C:\pslf\pge\ramcohef2\cases\su Rating = 1

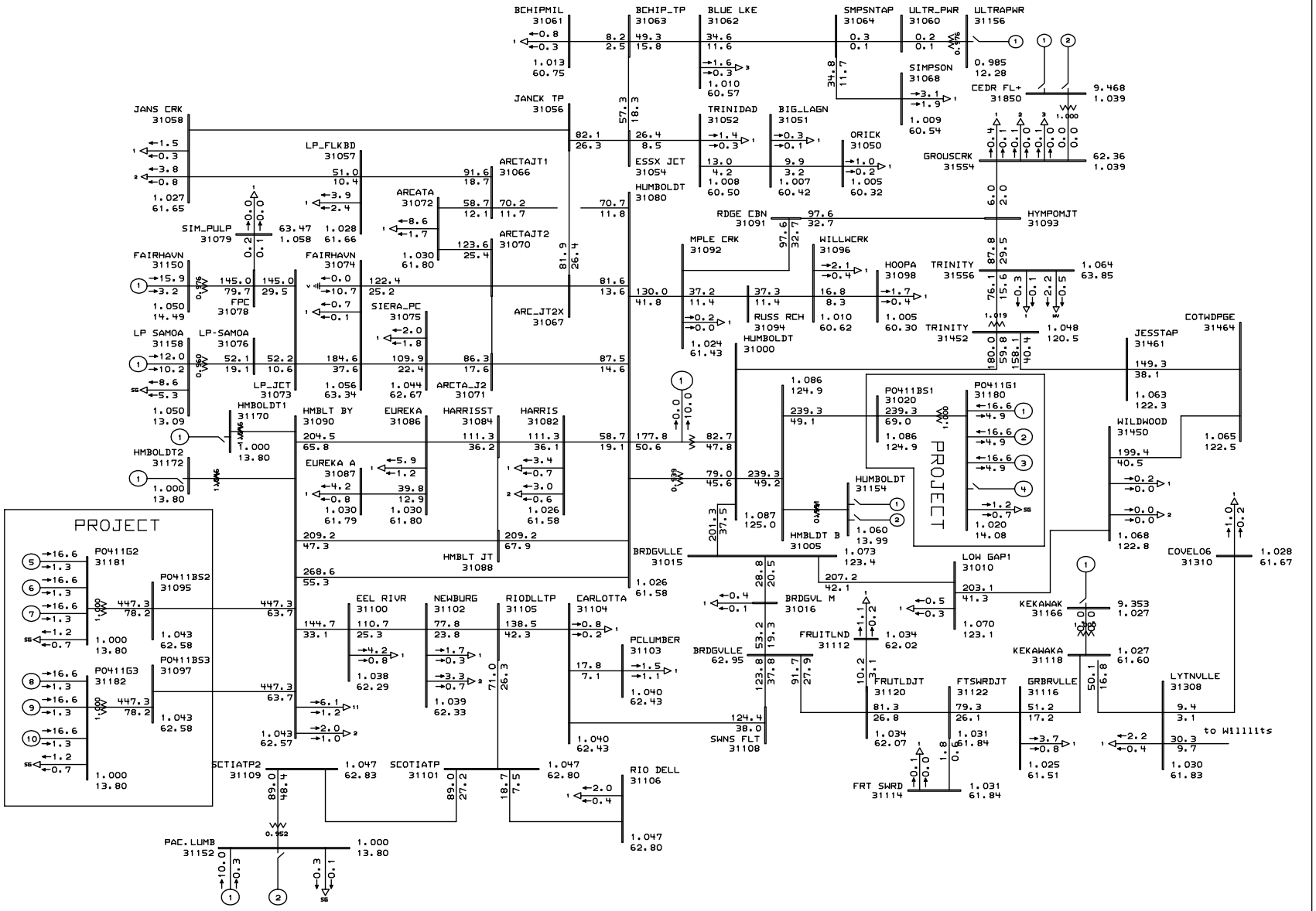

General Electric International, Inc. PSLF Program AMPS/Pct Mon Dec 12 06:52:11 2005

PG&E Tranmission Planning	PG&E 2004 BASE CASE SERIES - 2008 Summer Off Peak Case Post-Project PATH15=4944MW(S-N) PATH26=-1785MW(N-S) PDCI=-1848MW(N-S) COI=-3636MW(N-S) RAMCO Humboldt Energy Facility SIS-2 Post-Project Mitigation 1	Plot 42 - 2008 Summer Off Peak Normal Conditions - Post-Project Mitigation 1 - Generation Reduction	C:\pslf\pge\ramcohef2\draw\ram C:\pslf\pge\ramcohef2\cases\su Rating = 1

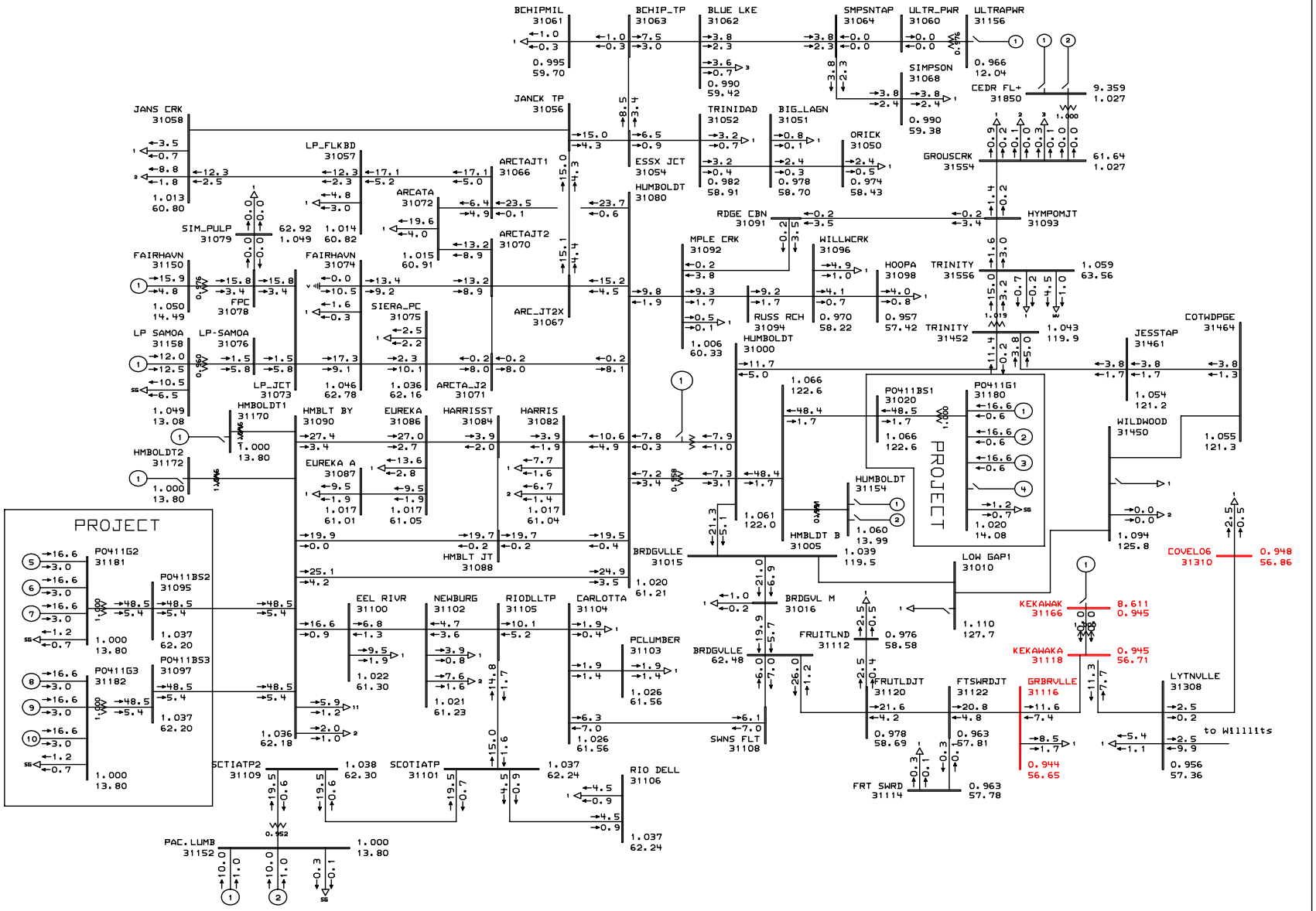

General Electric International, Inc. PSLF Program MW/MVAR Mon Dec 12 06:52:13 2005

PG&E Tranmission Planning	PG&E 2004 BASE CASE SERIES - 2008 Humboldt Summer Peak Case Post-Project PATH15=-1615MW(S-N) PATH26=3333MW(N-S) PDCI=3105MW(N-S) COI=4736MW(N-S) RAMCO Humboldt Energy Facility SIS-2 Post-Project Mitigation 1	Plot 43 - 2008 Summer Peak - Post-Project - Mitigation 1 Outage: Brigdgeville - Cottonwood 115 kV Line	C:\pslf\pge\ramcohef2\draw\ram C:\pslf\pge\ramcohef2\cases\su Rating = 2

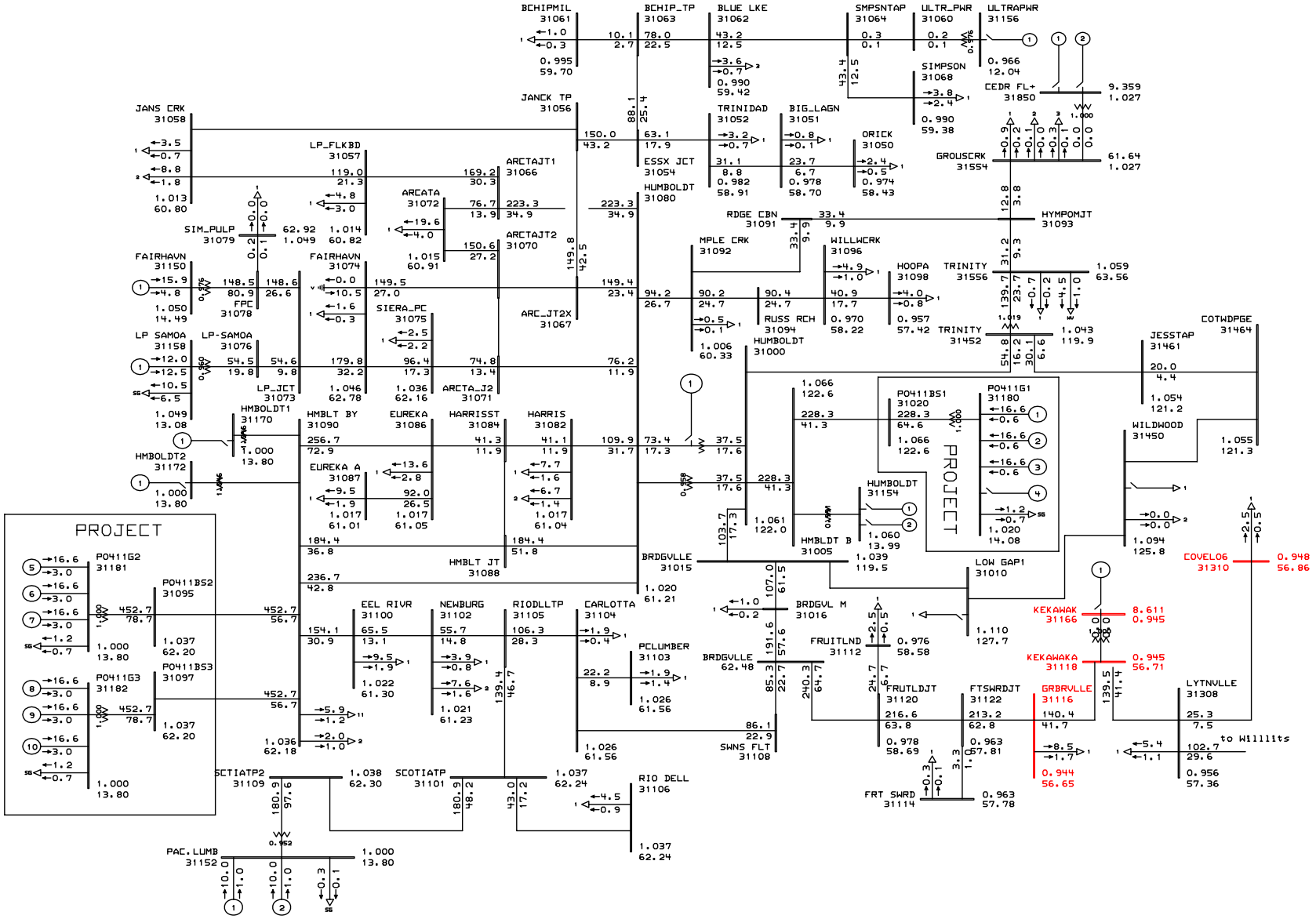

General Electric International, Inc. PSLF Program AMPS/Pct Mon Dec 12 06:52:13 2005

PG&E Tranmission Planning	PG&E 2004 BASE CASE SERIES - 2008 Humboldt Summer Peak Case Post-Project PATH15=-1615MW(S-N) PATH26=3333MW(N-S) PDCI=3105MW(N-S) COI=4736MW(N-S) RAMCO Humboldt Energy Facility SIS-2 Post-Project Mitigation 1	Plot 44 - 2008 Summer Peak - Post-Project - Mitigation 1 Outage: Brigdgeville - Cottonwood 115 kV Line	C:\pslf\pge\ramcohef2\draw\ram C:\pslf\pge\ramcohef2\cases\su Rating = 2

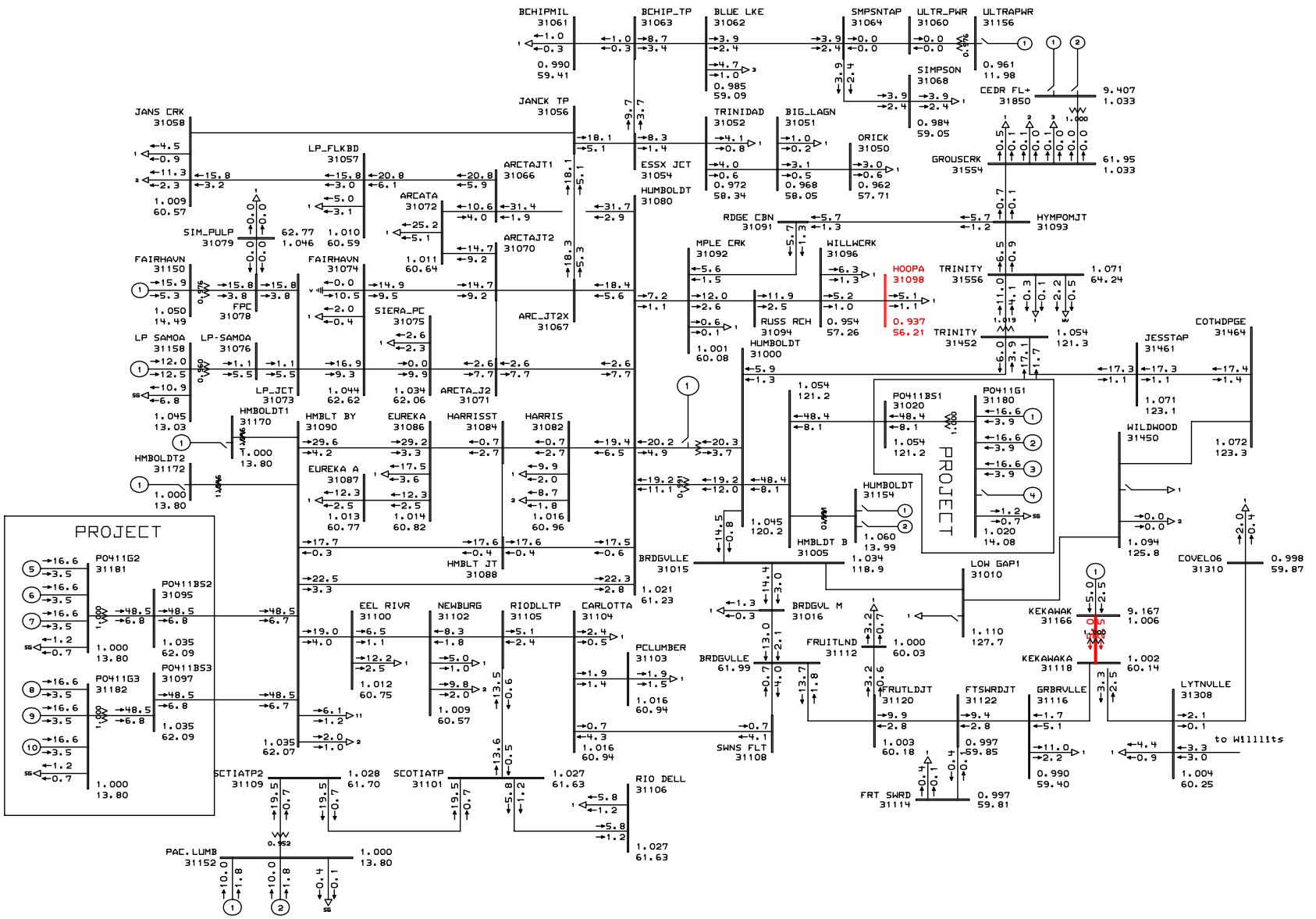

General Electric International, Inc. PSLF Program MW/MVAR Mon Dec 12 06:52:15 2005

PG&E Tranmission Planning	PG&E 2004 BASE CASE SERIES - 2008 Humboldt Winter Peak Case Post-Project PATH15=3536MW(S-N) PATH26=-675MW(N-S) PDCI=-1845MW(N-S) COI=-3110MW(N-S) RAMCO Humboldt Energy Facility SIS-2 Post-Project Mitigation 1	Plot 45 - 2008 Winter Peak - Post-Project - Mitigation 1 Outage: Brigdgeville - Cottonwood 115 kV Line	C:\pslf\pge\ramcohef2\draw\ram C:\pslf\pge\ramcohef2\cases\wi Rating = 4

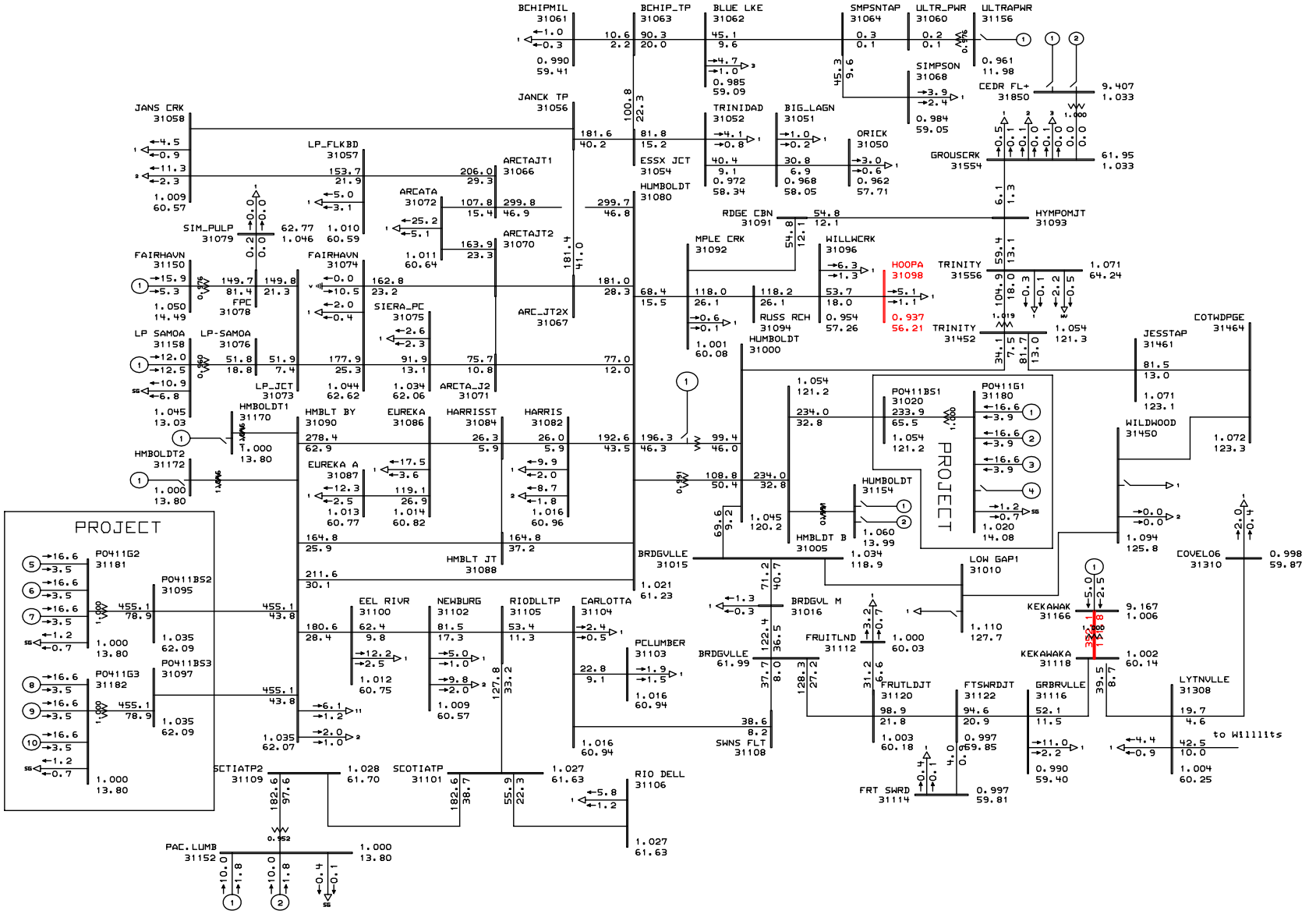

General Electric International, Inc. PSLF Program AMPS/Pct Mon Dec 12 06:52:15 2005

PG&E Tranmission Planning	PG&E 2004 BASE CASE SERIES - 2008 Humboldt Winter Peak Case Post-Project PATH15=3536MW(S-N) PATH26=-675MW(N-S) PDCI=-1845MW(N-S) COI=-3110MW(N-S) RAMCO Humboldt Energy Facility SIS-2 Post-Project Mitigation 1	Plot 46 - 2008 Winter Peak - Post-Project - Mitigation 1 Outage: Brigdgeville - Cottonwood 115 kV Line	C:\pslf\pge\ramcohef2\draw\ram C:\pslf\pge\ramcohef2\cases\wi Rating = 4

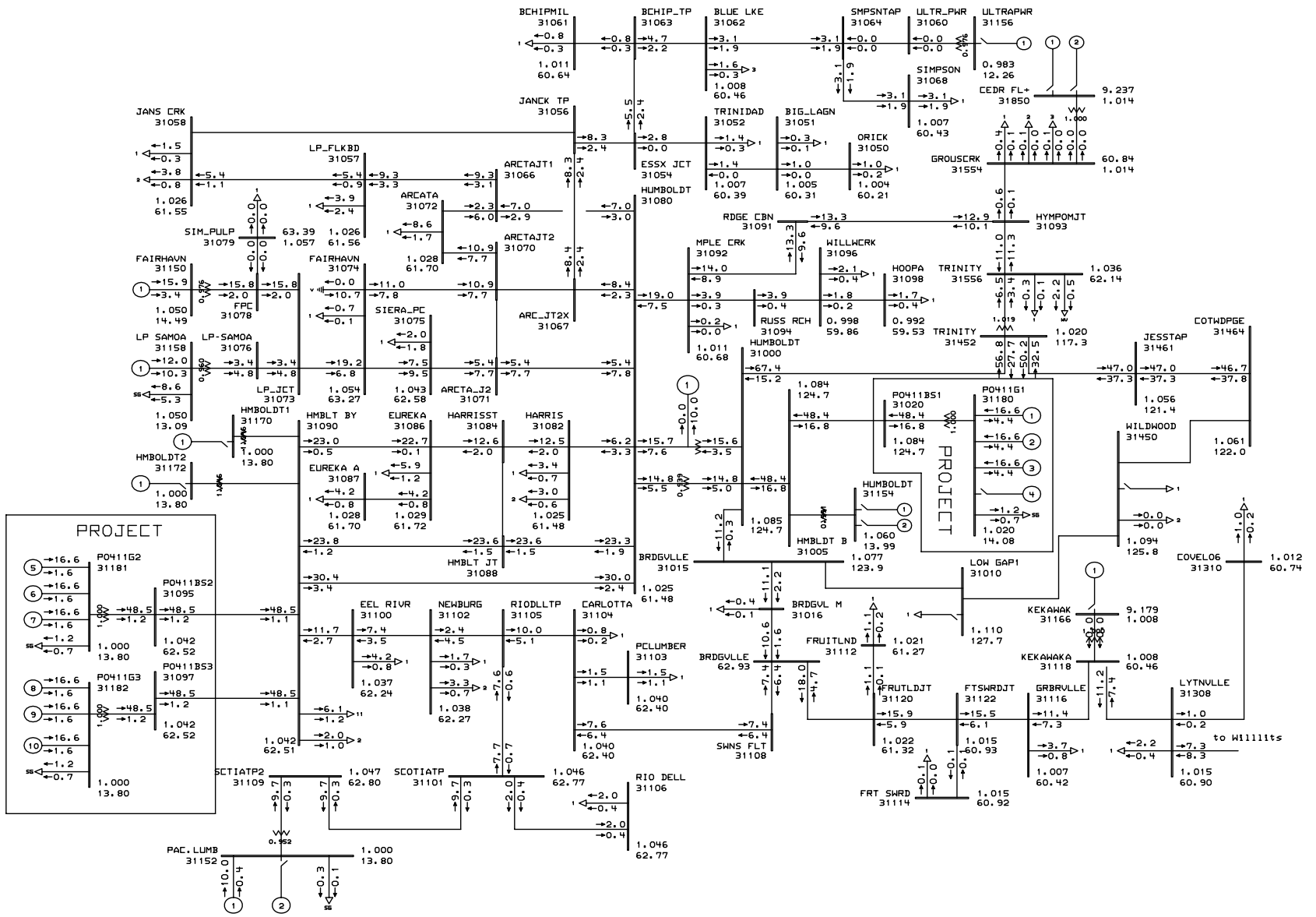

General Electric International, Inc. PSLF Program MW/MVAR Mon Dec 12 06:52:17 2005

PG&E Tranmission Planning	PG&E 2004 BASE CASE SERIES - 2008 Summer Off Peak Case Post-Project PATH15=4944MW(S-N) PATH26=-1785MW(N-S) PDCI=-1848MW(N-S) COI=-3636MW(N-S) RAMCO Humboldt Energy Facility SIS-2 Post-Project Mitigation 1	Plot 47 - 2008 Summer Off Peak - Post-Project - Mitigation 1 Outage: Brigdgeville - Cottonwood 115 kV Line	C:\pslf\pge\ramcohef2\draw\ram C:\pslf\pge\ramcohef2\cases\su Rating = 2

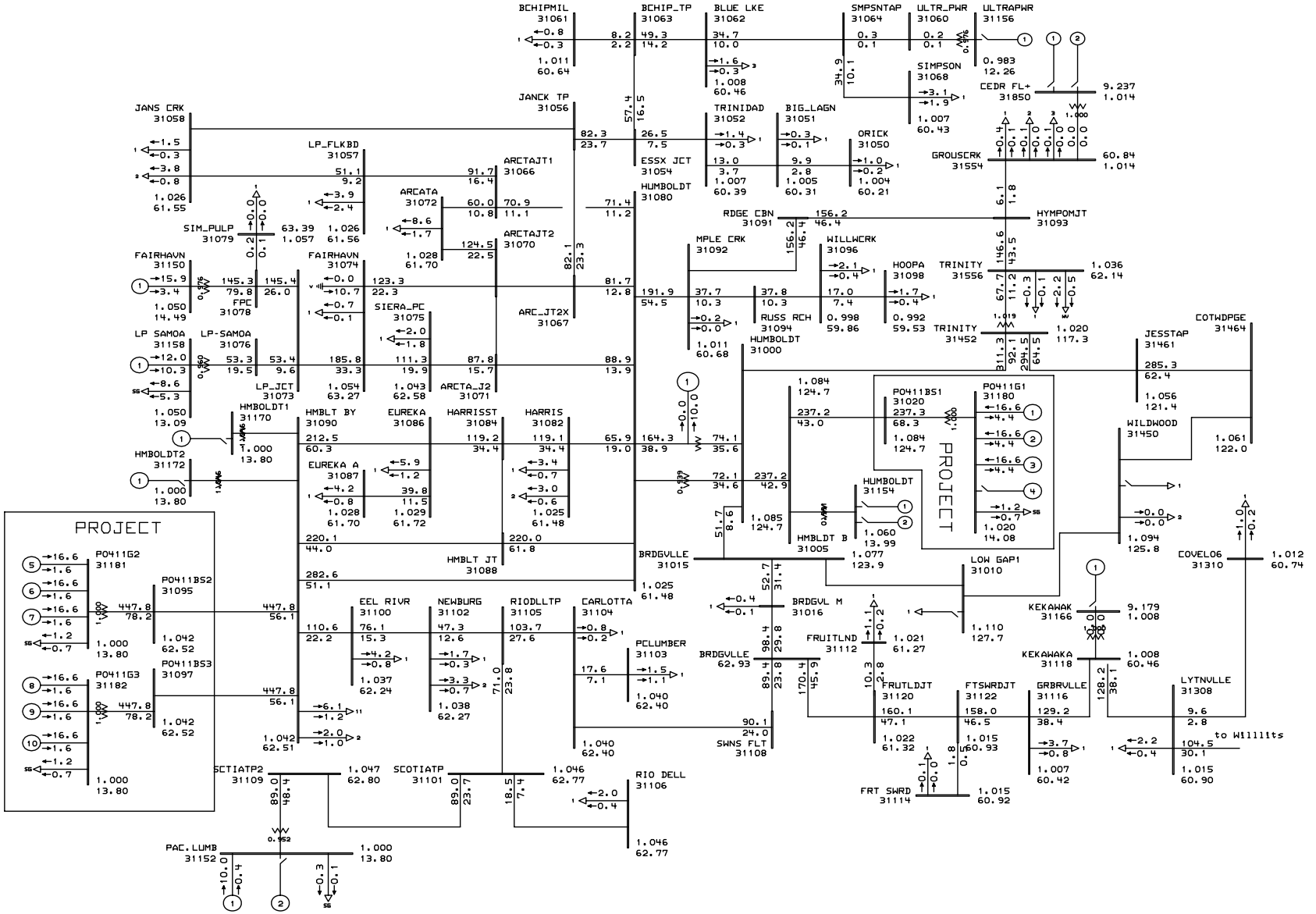

General Electric International, Inc. PSLF Program AMPS/Pct Mon Dec 12 06:52:18 2005

PG&E Tranmission Planning	PG&E 2004 BASE CASE SERIES - 2008 Summer Off Peak Case Post-Project PATH15=4944MW(S-N) PATH26=-1785MW(N-S) PDCI=-1848MW(N-S) COI=-3636MW(N-S) RAMCO Humboldt Energy Facility SIS-2 Post-Project Mitigation 1	Plot 48 - 2008 Summer Off Peak - Post-Project - Mitigation 1 Outage: Brigdgeville - Cottonwood 115 kV Line	C:\pslf\pge\ramcohef2\draw\ram C:\pslf\pge\ramcohef2\cases\su Rating = 2

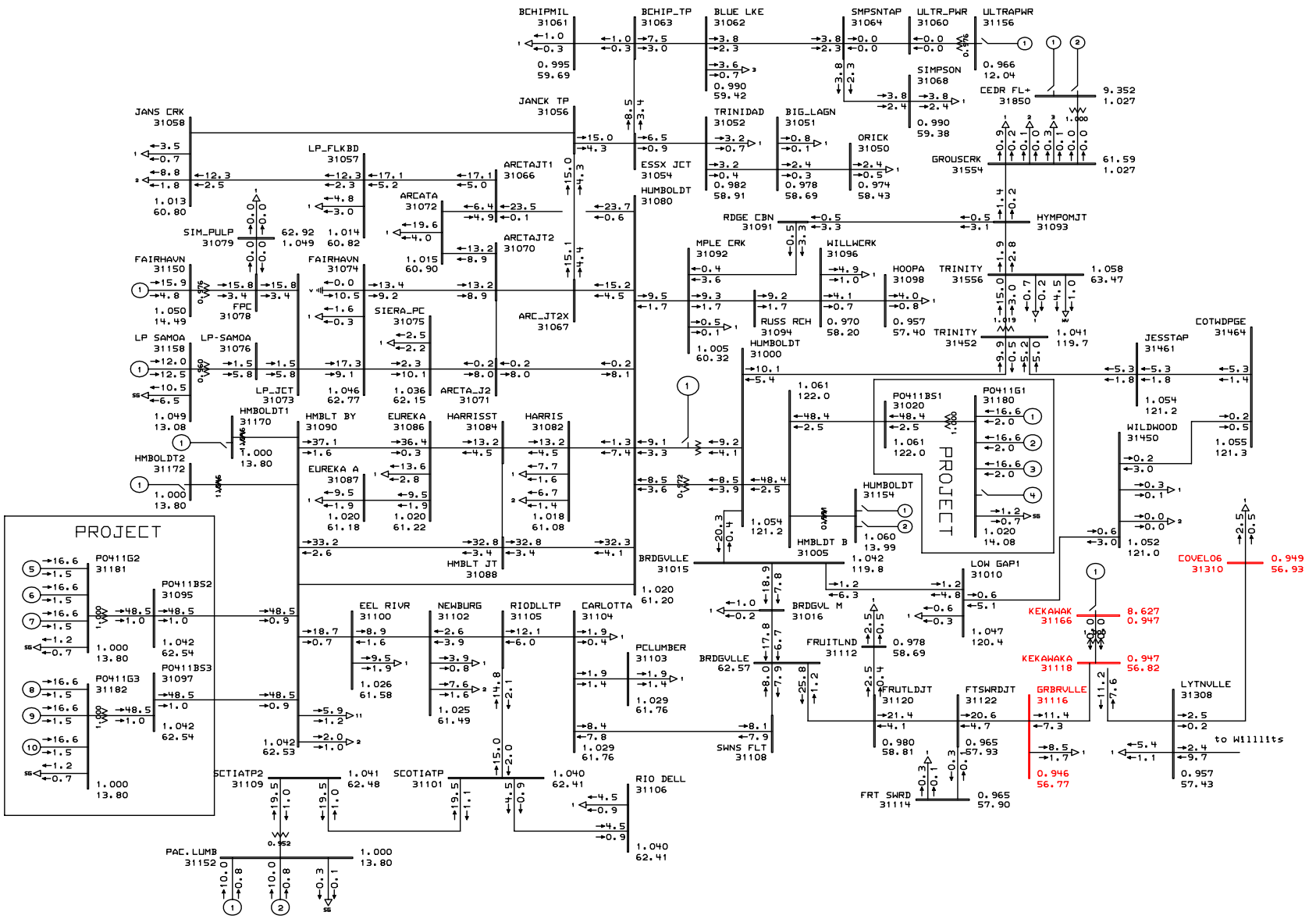

General Electric International, Inc. PSLF Program MW/MVAR Mon Dec 12 06:52:20 2005

PG&E Tranmission Planning	PG&E 2004 BASE CASE SERIES - 2008 Humboldt Summer Peak Case Post-Project PATH15=-1615MW(S-N) PATH26=3333MW(N-S) PDCI=3105MW(N-S) COI=4736MW(N-S) RAMCO Humboldt Energy Facility SIS-2 Post-Project Mitigation 1	Plot 49 - 2008 Summer Peak - Post-Project - Mitigation 1 Outage: Humboldt - Humboldt Bay #2 60 kV Line	C:\pslf\pge\ramcohef2\draw\ram C:\pslf\pge\ramcohef2\cases\su Rating = 2

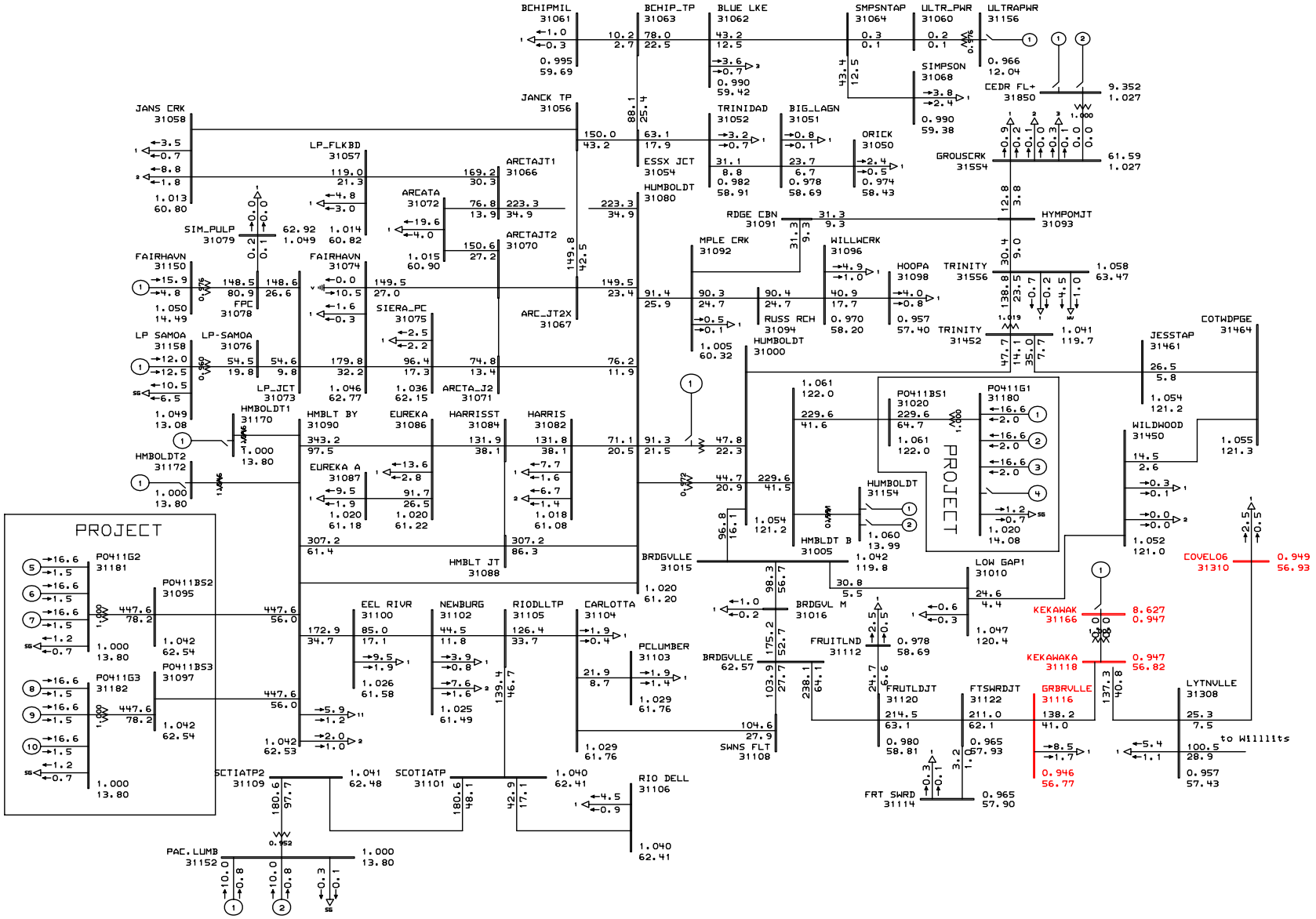

General Electric International, Inc. PSLF Program AMPS/Pct Mon Dec 12 06:52:20 2005

PG&E Tranmission Planning	PG&E 2004 BASE CASE SERIES - 2008 Humboldt Summer Peak Case Post-Project PATH15=-1615MW(S-N) PATH26=3333MW(N-S) PDCI=3105MW(N-S) COI=4736MW(N-S) RAMCO Humboldt Energy Facility SIS-2 Post-Project Mitigation 1	Plot 50 - 2008 Summer Peak - Post-Project - Mitigation 1 Outage: Humboldt - Humboldt Bay #2 60 kV Line	C:\pslf\pge\ramcohef2\draw\ram C:\pslf\pge\ramcohef2\cases\su Rating = 2

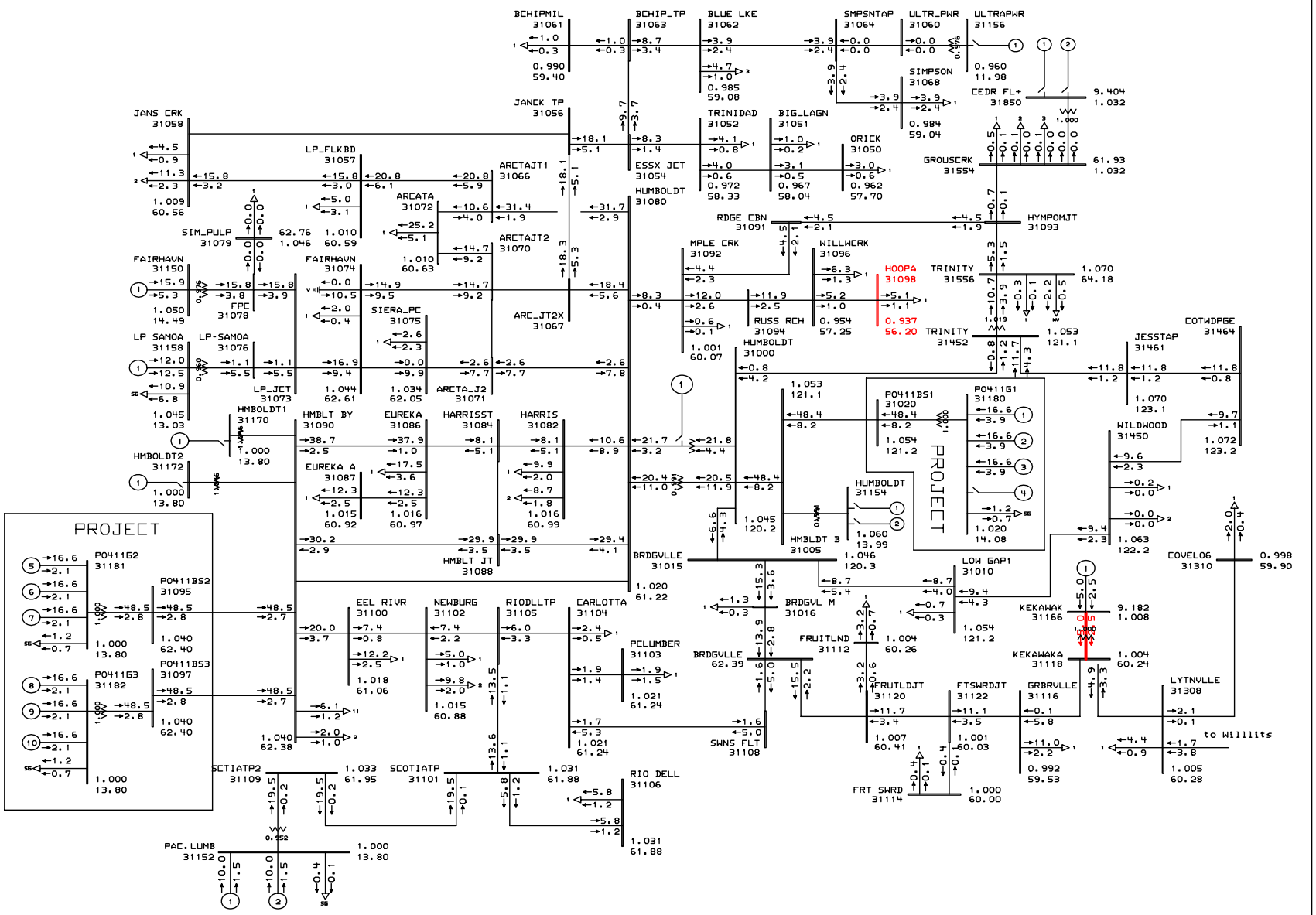

General Electric International, Inc. PSLF Program MW/MVAR Mon Dec 12 06:52:22 2005

PG&E Tranmission Planning	PG&E 2004 BASE CASE SERIES - 2008 Humboldt Winter Peak Case Post-Project PATH15=3536MW(S-N) PATH26=-675MW(N-S) PDCI=-1845MW(N-S) COI=-3110MW(N-S) RAMCO Humboldt Energy Facility SIS-2 Post-Project Mitigation 1	Plot 51 - 2008 Winter Peak - Post-Project - Mitigation 1 Outage: Humboldt - Humboldt Bay #2 60 kV Line	C:\pslf\pge\ramcohef2\draw\ram C:\pslf\pge\ramcohef2\cases\wi Rating = 4

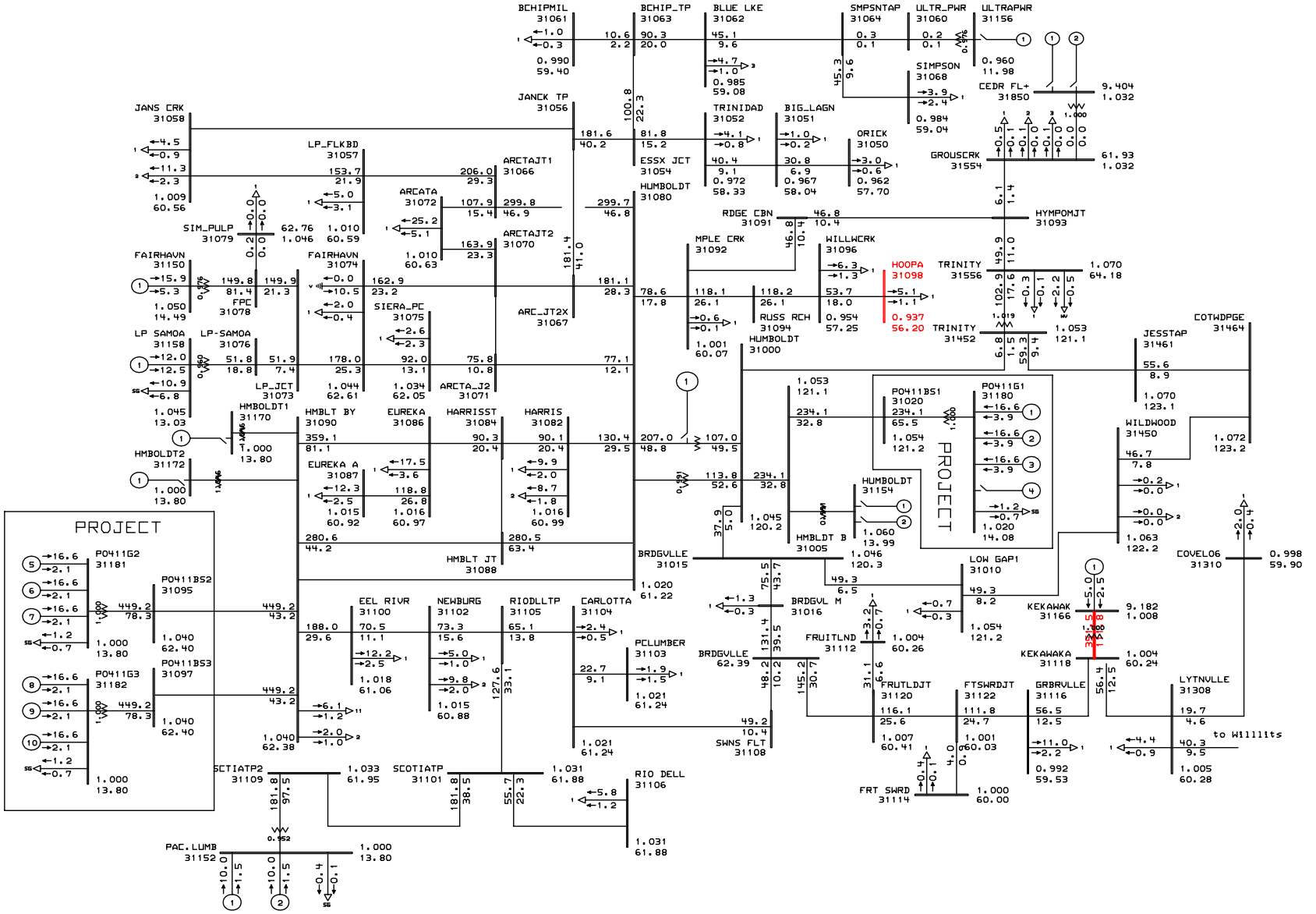

General Electric International, Inc. PSLF Program AMPS/Pct Mon Dec 12 06:52:22 2005

PG&E Tranmission Planning	PG&E 2004 BASE CASE SERIES - 2008 Humboldt Winter Peak Case Post-Project PATH15=3536MW(S-N) PATH26=-675MW(N-S) PDCI=-1845MW(N-S) COI=-3110MW(N-S) RAMCO Humboldt Energy Facility SIS-2 Post-Project Mitigation 1	Plot 52 - 2008 Winter Peak - Post-Project - Mitigation 1 Outage: Humboldt - Humboldt Bay #2 60 kV Line	C:\pslf\pge\ramcohef2\draw\ram C:\pslf\pge\ramcohef2\cases\wi Rating = 4

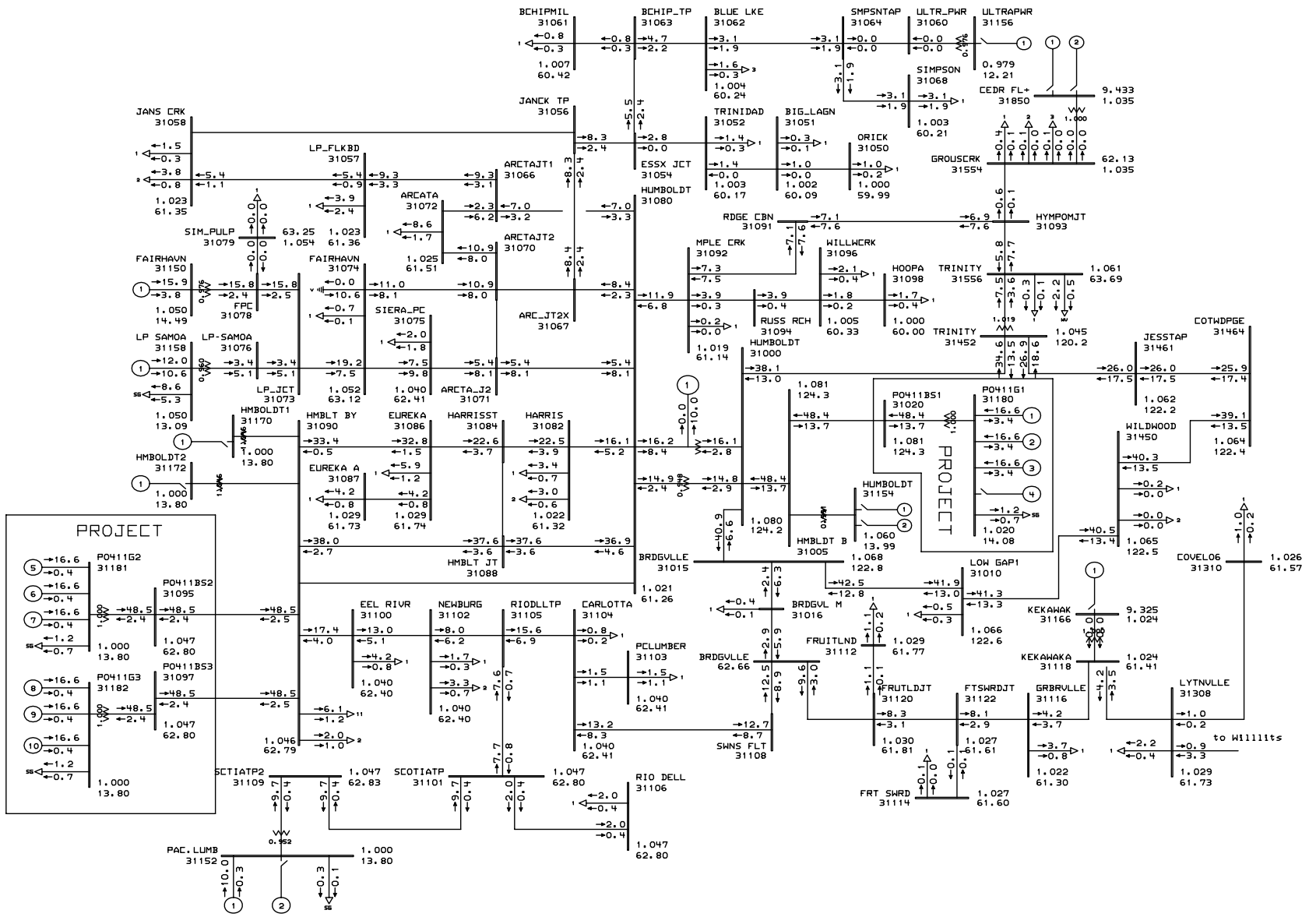

General Electric International, Inc. PSLF Program MW/MVAR Mon Dec 12 06:52:24 2005

PG&E Tranmission Planning	PG&E 2004 BASE CASE SERIES - 2008 Summer Off Peak Case Post-Project PATH15=4944MW(S-N) PATH26=-1785MW(N-S) PDCI=-1848MW(N-S) COI=-3636MW(N-S) RAMCO Humboldt Energy Facility SIS-2 Post-Project Mitigation 1	Plot 53 - 2008 Summer Off Peak - Post-Project - Mitigation 1 Outage: Humboldt - Humboldt Bay #2 60 kV Line	C:\pslf\pge\ramcohef2\draw\ram C:\pslf\pge\ramcohef2\cases\su Rating = 2

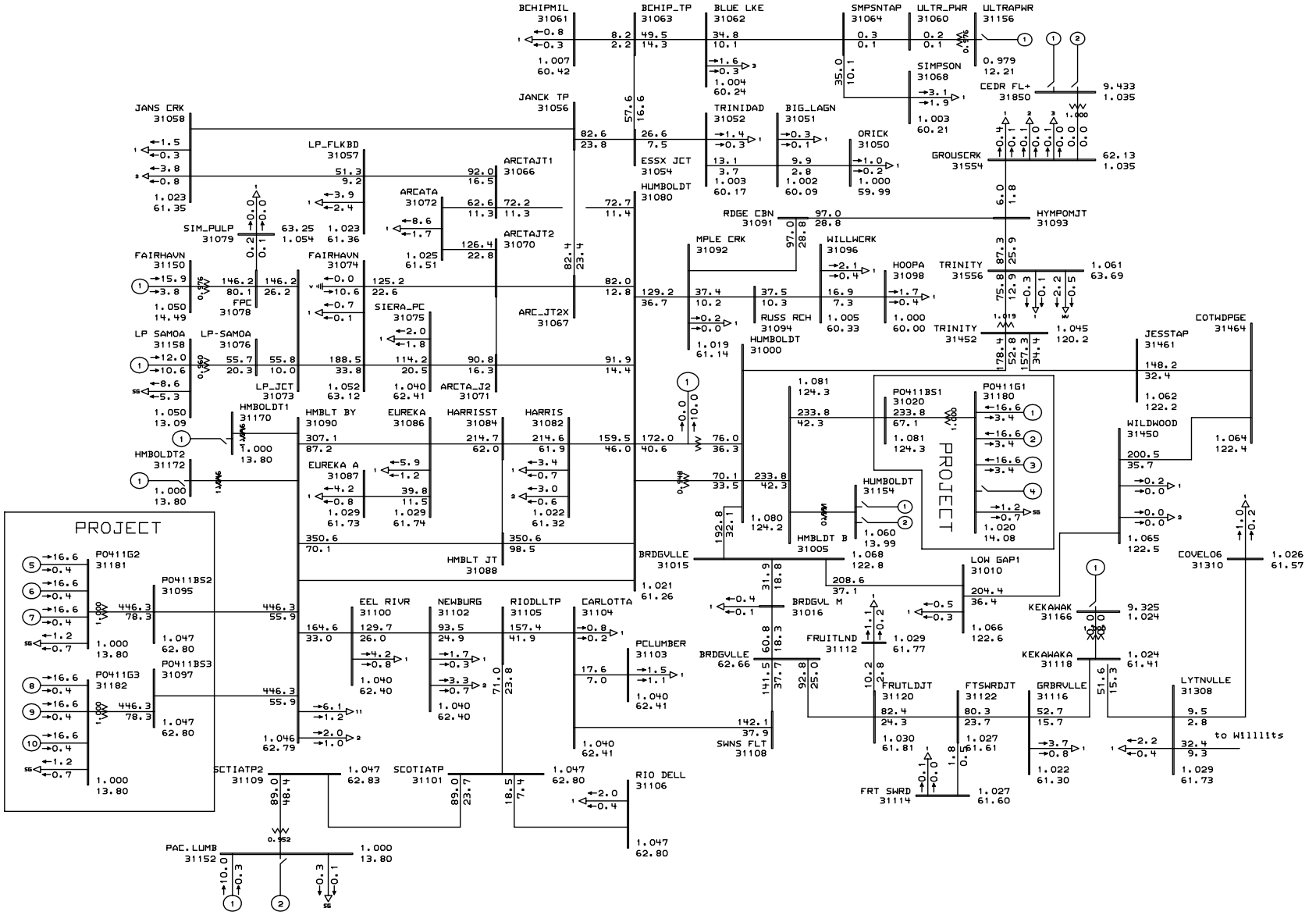

General Electric International, Inc. PSLF Program AMPS/Pct Mon Dec 12 06:52:24 2005

PG&E Tranmission Planning	PG&E 2004 BASE CASE SERIES - 2008 Summer Off Peak Case Post-Project PATH15=4944MW(S-N) PATH26=-1785MW(N-S) PDCI=-1848MW(N-S) COI=-3636MW(N-S) RAMCO Humboldt Energy Facility SIS-2 Post-Project Mitigation 1	Plot 54 - 2008 Summer Off Peak - Post-Project - Mitigation 1 Outage: Humboldt - Humboldt Bay #2 60 kV Line	C:\pslf\pge\ramcohef2\draw\ram C:\pslf\pge\ramcohef2\cases\su Rating = 2

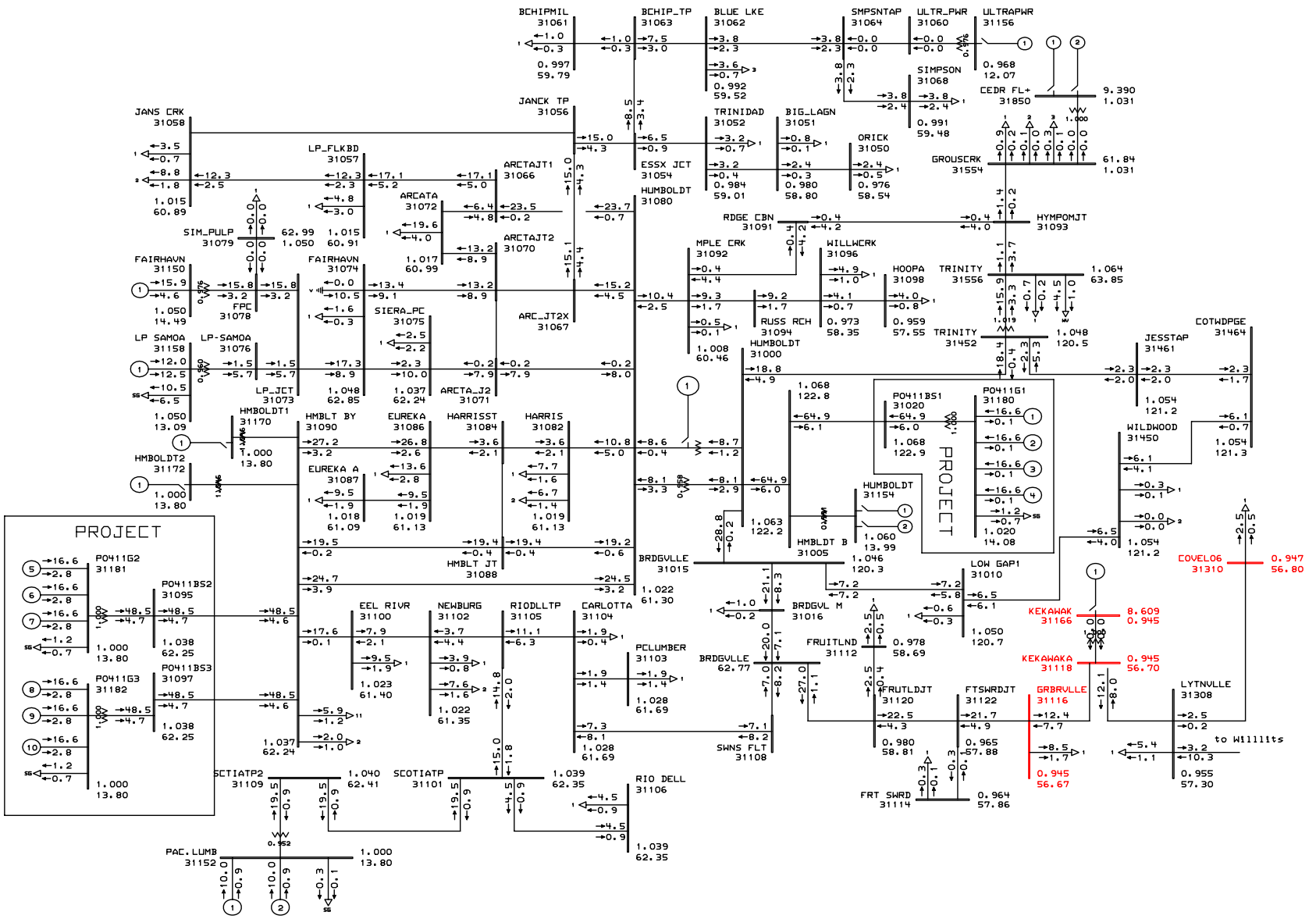

General Electric International, Inc. PSLF Program MW/MVAR Mon Dec 12 06:52:28 2005

PG&E Tranmission Planning	PG&E 2004 BASE CASE SERIES - 2008 Humboldt Summer Peak Case Post-Project PATH15=-1615MW(S-N) PATH26=3333MW(N-S) PDCI=3105MW(N-S) COI=4736MW(N-S) RAMCO Humboldt Energy Facility SIS-2 Post-Project Mitigation 2	Plot 55 - 2008 Summer Peak Normal Conditions - Post-Project Mitigation 2 - Facility Upgrades	C:\pslf\pge\ramcohef2\draw\ram C:\pslf\pge\ramcohef2\cases\su Rating = 1

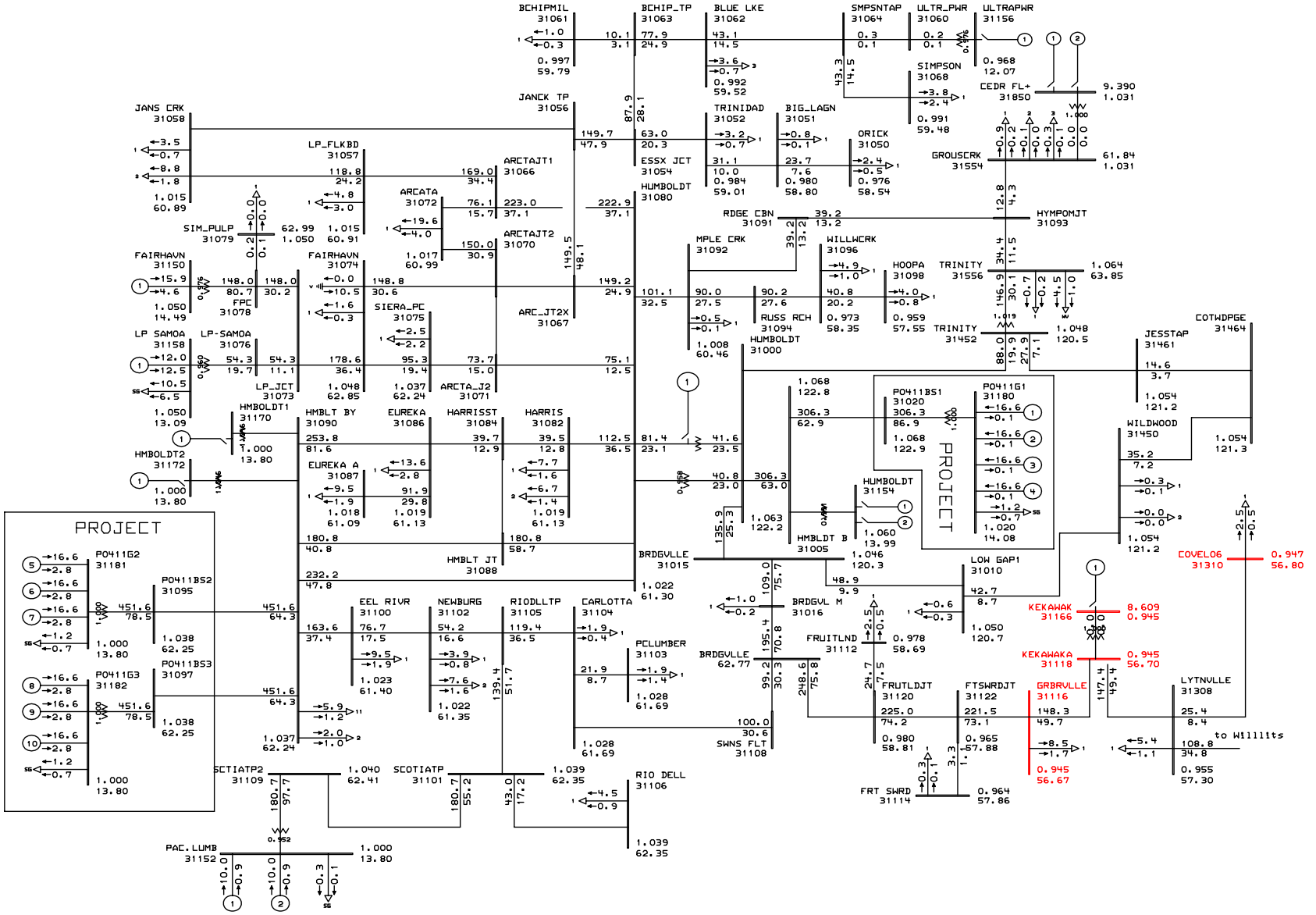

General Electric International, Inc. PSLF Program AMPS/Pct Mon Dec 12 06:52:28 2005

PG&E Tranmission Planning	PG&E 2004 BASE CASE SERIES - 2008 Humboldt Summer Peak Case Post-Project PATH15=-1615MW(S-N) PATH26=3333MW(N-S) PDCI=3105MW(N-S) COI=4736MW(N-S) RAMCO Humboldt Energy Facility SIS-2 Post-Project Mitigation 2	Plot 56 - 2008 Summer Peak Normal Conditions - Post-Project Mitigation 2 - Facility Upgrades	C:\pslf\pge\ramcohef2\draw\ram C:\pslf\pge\ramcohef2\cases\su Rating = 1

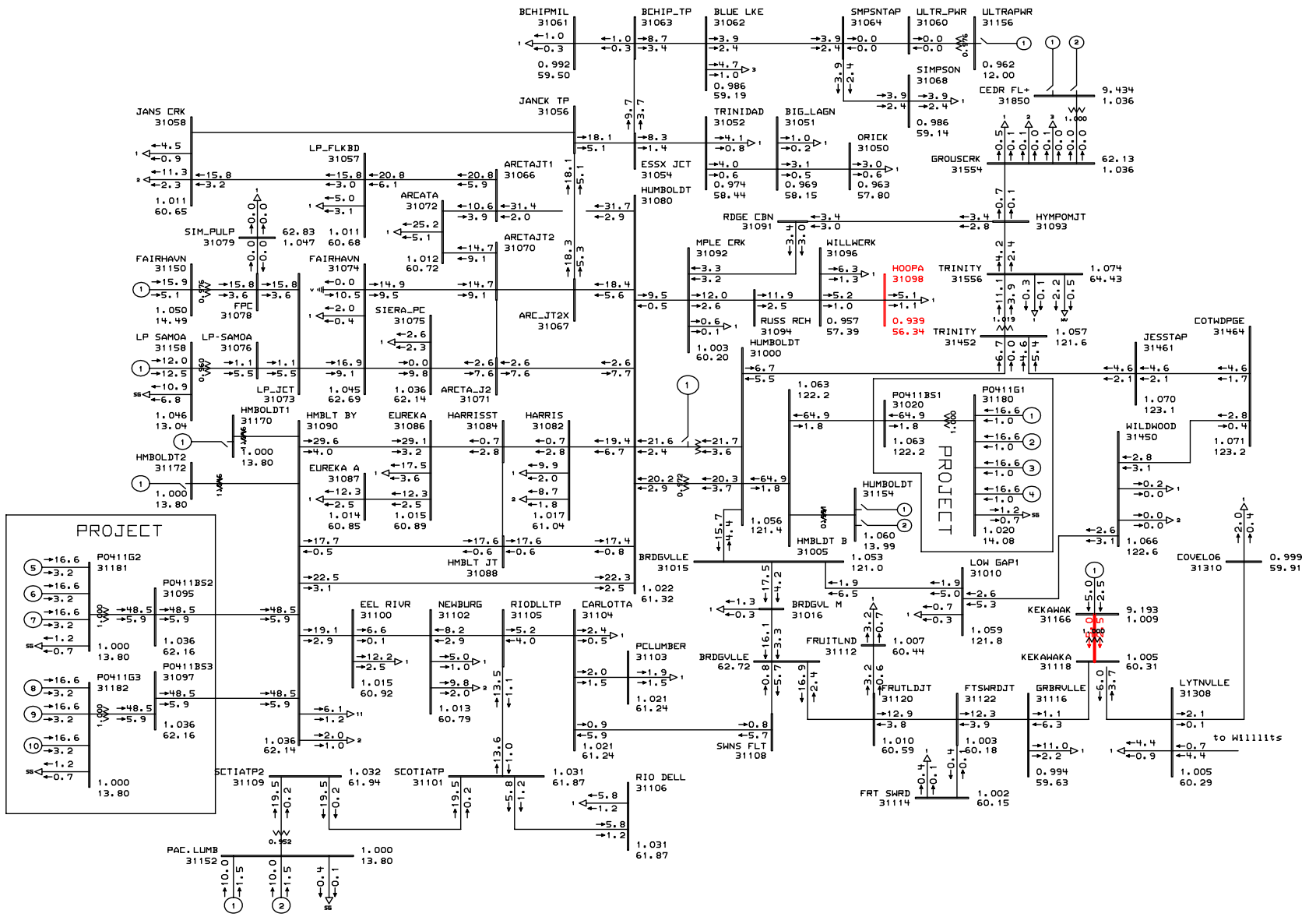

General Electric International, Inc. PSLF Program MW/MVAR Mon Dec 12 06:52:29 2005

PG&E Tranmission Planning	PG&E 2004 BASE CASE SERIES - 2008 Humboldt Winter Peak Case Post-Project PATH15=3536MW(S-N) PATH26=-675MW(N-S) PDCI=-1845MW(N-S) COI=-3110MW(N-S) RAMCO Humboldt Energy Facility SIS-2 Post-Project Mitigation 2	Plot 57 - 2008 Winter Peak Normal Conditions - Post-Project Mitigation 2 - Facility Upgrades	C:\pslf\pge\ramcohef2\draw\ram C:\pslf\pge\ramcohef2\cases\wi Rating = 3

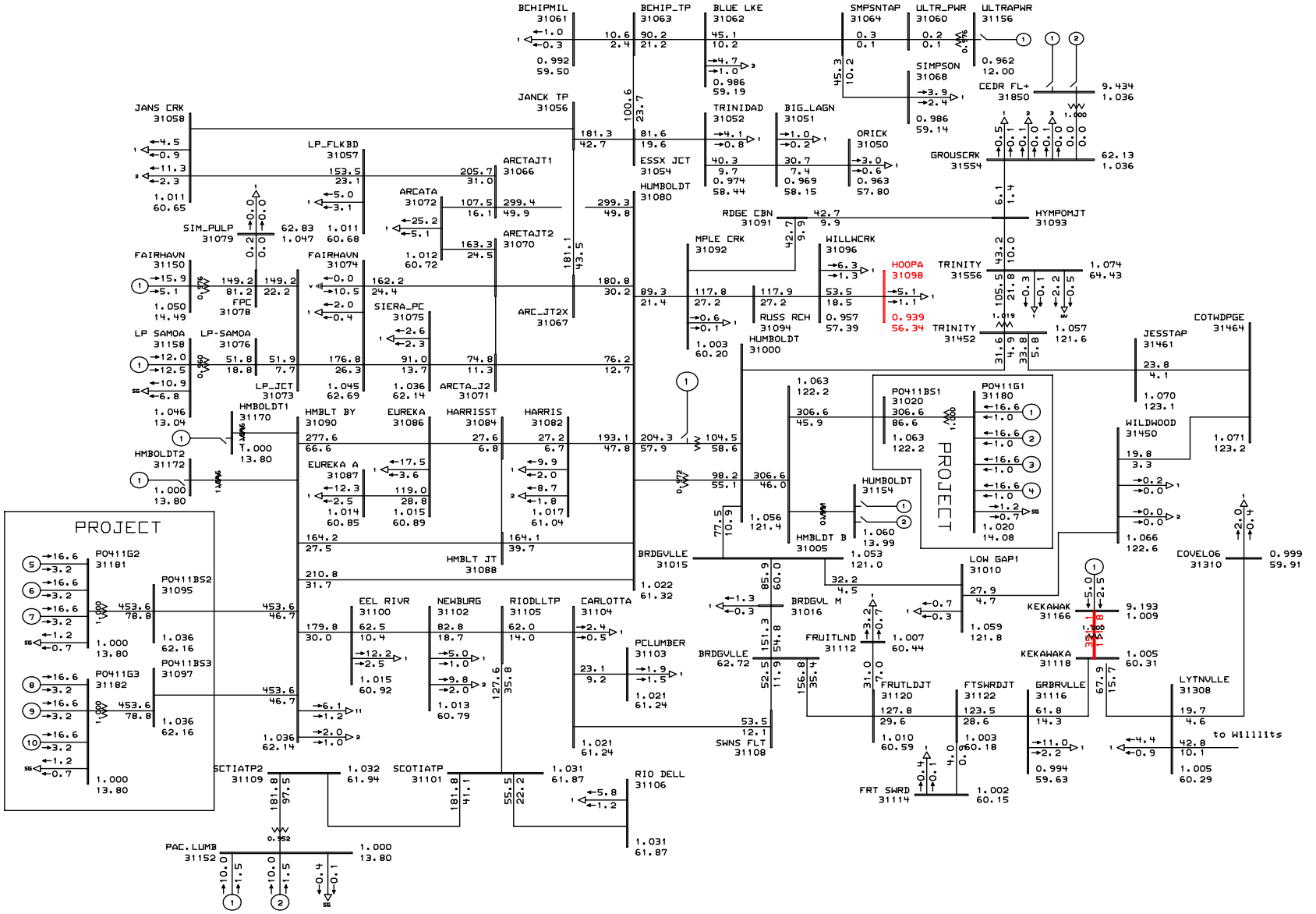

General Electric International, Inc. PSLF Program AMPS/Pct Mon Dec 12 06:52:29 2005

PG&E Tranmission Planning	PG&E 2004 BASE CASE SERIES - 2008 Humboldt Winter Peak Case Post-Project PATH15=3536MW(S-N) PATH26=-675MW(N-S) PDCI=-1845MW(N-S) COI=-3110MW(N-S) RAMCO Humboldt Energy Facility SIS-2 Post-Project Mitigation 2	Plot 58 - 2008 Winter Peak Normal Conditions - Post-Project Mitigation 2 - Facility Upgrades	C:\pslf\pge\ramcohef2\draw\ram C:\pslf\pge\ramcohef2\cases\wi Rating = 3

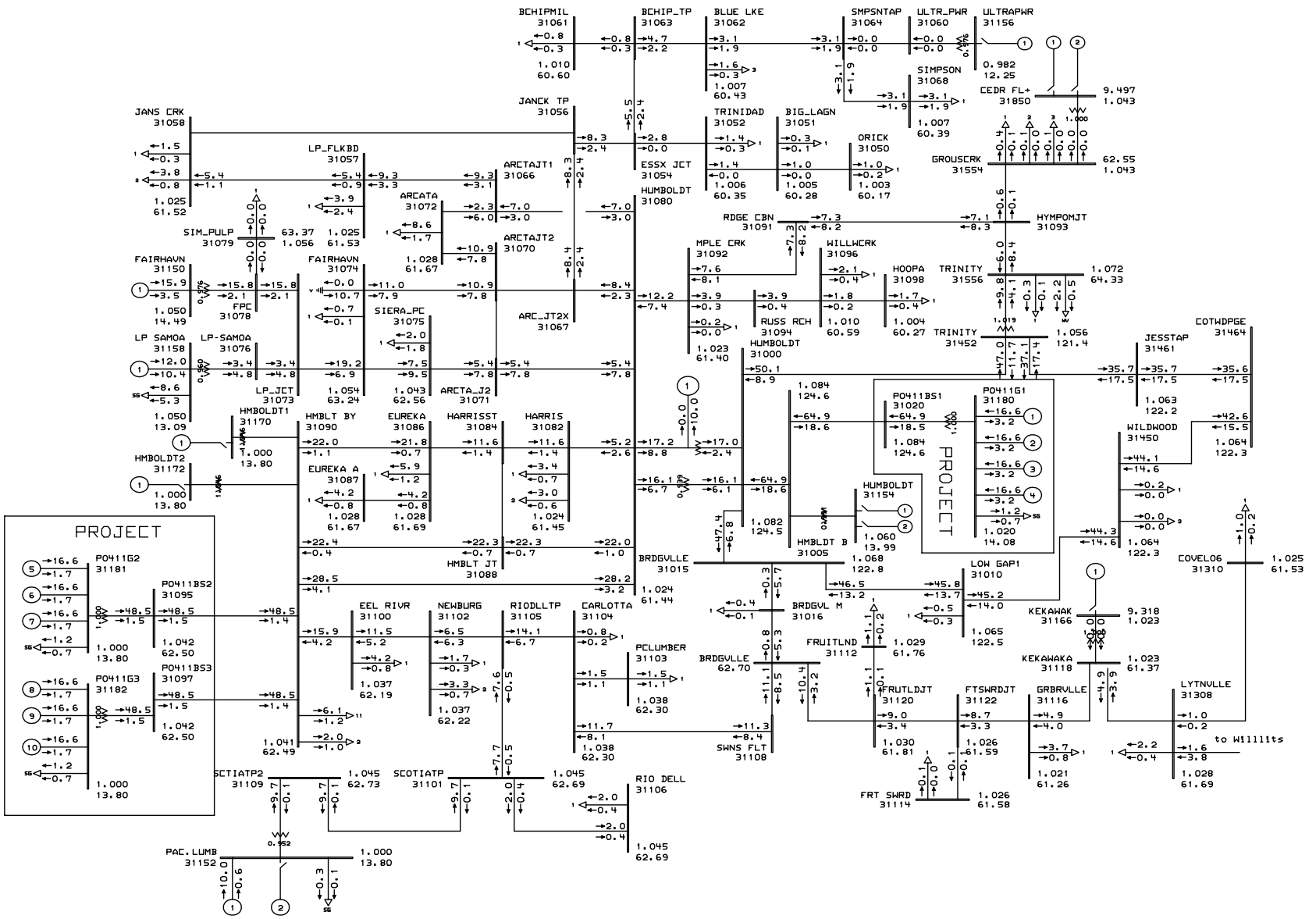

General Electric International, Inc. PSLF Program MW/MVAR Mon Dec 12 06:52:33 2005

PG&E Tranmission Planning	PG&E 2004 BASE CASE SERIES - 2008 Summer Off Peak Case Post-Project PATH15=4944MW(S-N) PATH26=-1785MW(N-S) PDCI=-1848MW(N-S) COI=-3636MW(N-S) RAMCO Humboldt Energy Facility SIS-2 Post-Project Mitigation 2	Plot 59 - 2008 Summer Off Peak Normal Conditions - Post-Project Mitigation 2 - Facility Upgrades	C:\pslf\pge\ramcohef2\draw\ram C:\pslf\pge\ramcohef2\cases\su Rating = 1

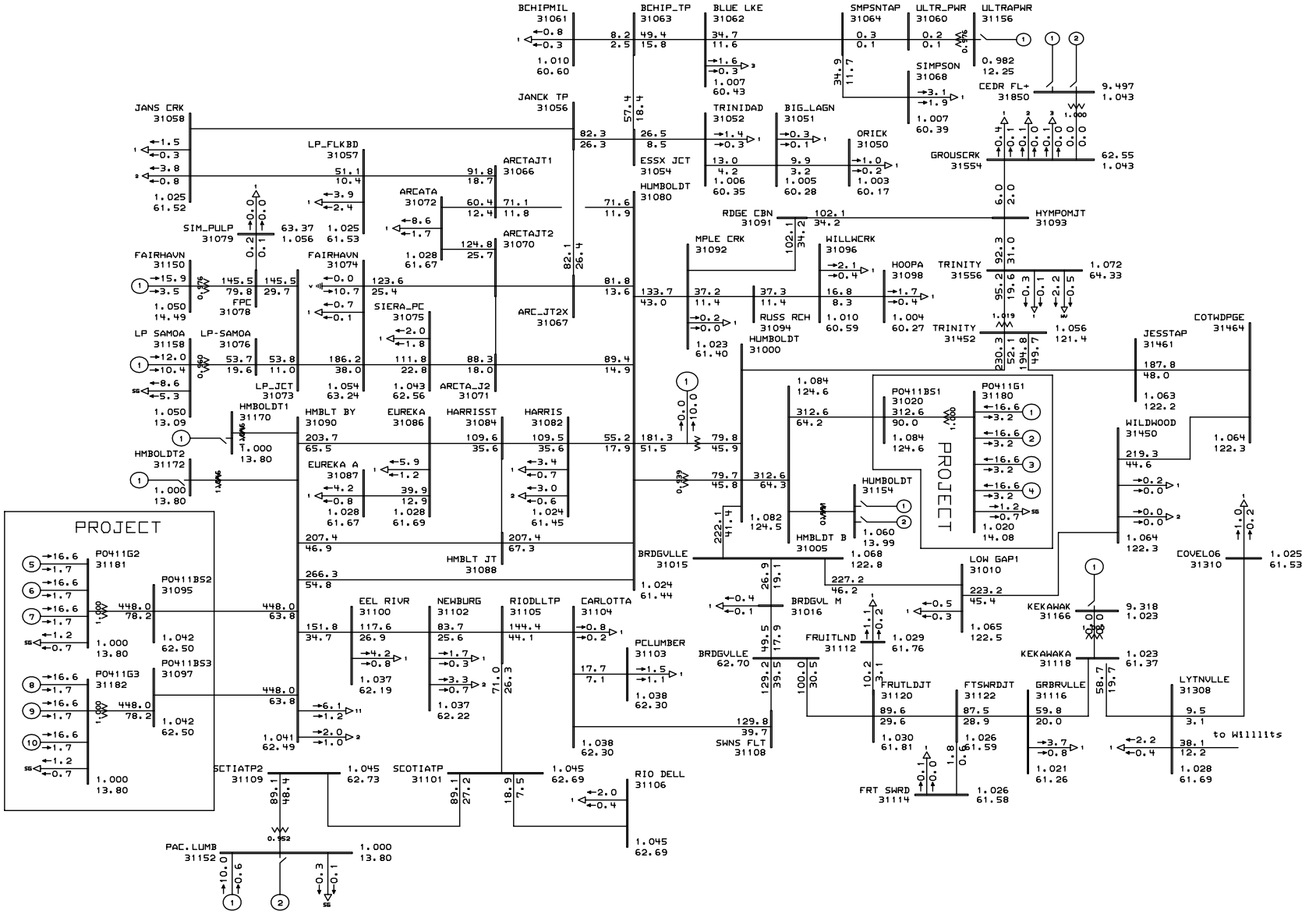

General Electric International, Inc. PSLF Program AMPS/Pct Mon Dec 12 06:52:33 2005

PG&E Tranmission Planning	PG&E 2004 BASE CASE SERIES - 2008 Summer Off Peak Case Post-Project PATH15=4944MW(S-N) PATH26=-1785MW(N-S) PDCI=-1848MW(N-S) COI=-3636MW(N-S) RAMCO Humboldt Energy Facility SIS-2 Post-Project Mitigation 2	Plot 60 - 2008 Summer Off Peak Normal Conditions - Post-Project Mitigation 2 - Facility Upgrades	C:\pslf\pge\ramcohef2\draw\ram C:\pslf\pge\ramcohef2\cases\su Rating = 1

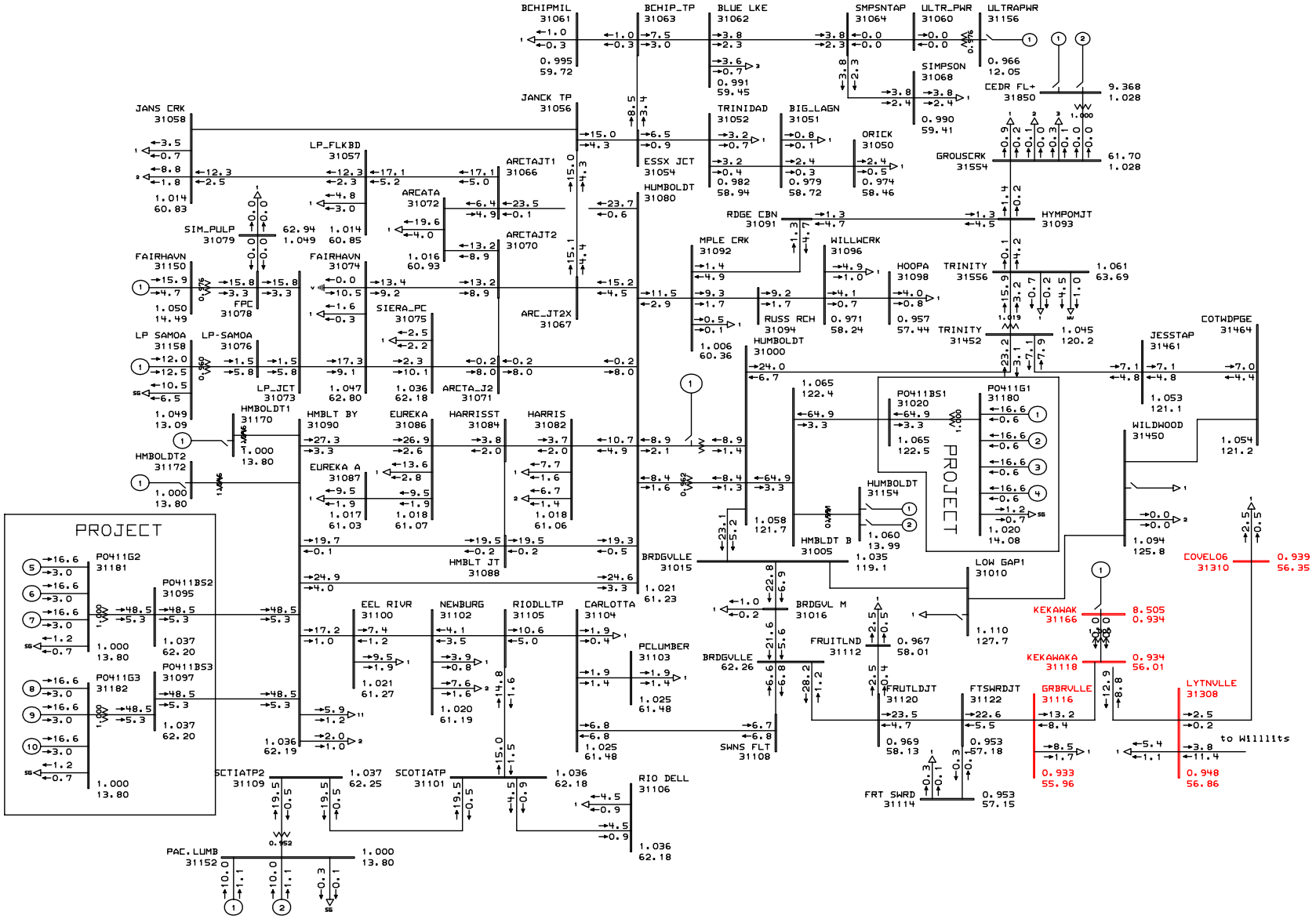

General Electric International, Inc. PSLF Program MW/MVAR Mon Dec 12 06:52:35 2005

PG&E Tranmission Planning	PG&E 2004 BASE CASE SERIES - 2008 Humboldt Summer Peak Case Post-Project PATH15=-1615MW(S-N) PATH26=3333MW(N-S) PDCI=3105MW(N-S) COI=4736MW(N-S) RAMCO Humboldt Energy Facility SIS-2 Post-Project Mitigation 2	Plot 61 - 2008 Summer Peak - Post-Project - Mitigation 2 Outage: Brigdgeville - Cottonwood 115 kV Line	C:\pslf\pge\ramcohef2\draw\ram C:\pslf\pge\ramcohef2\cases\su Rating = 2

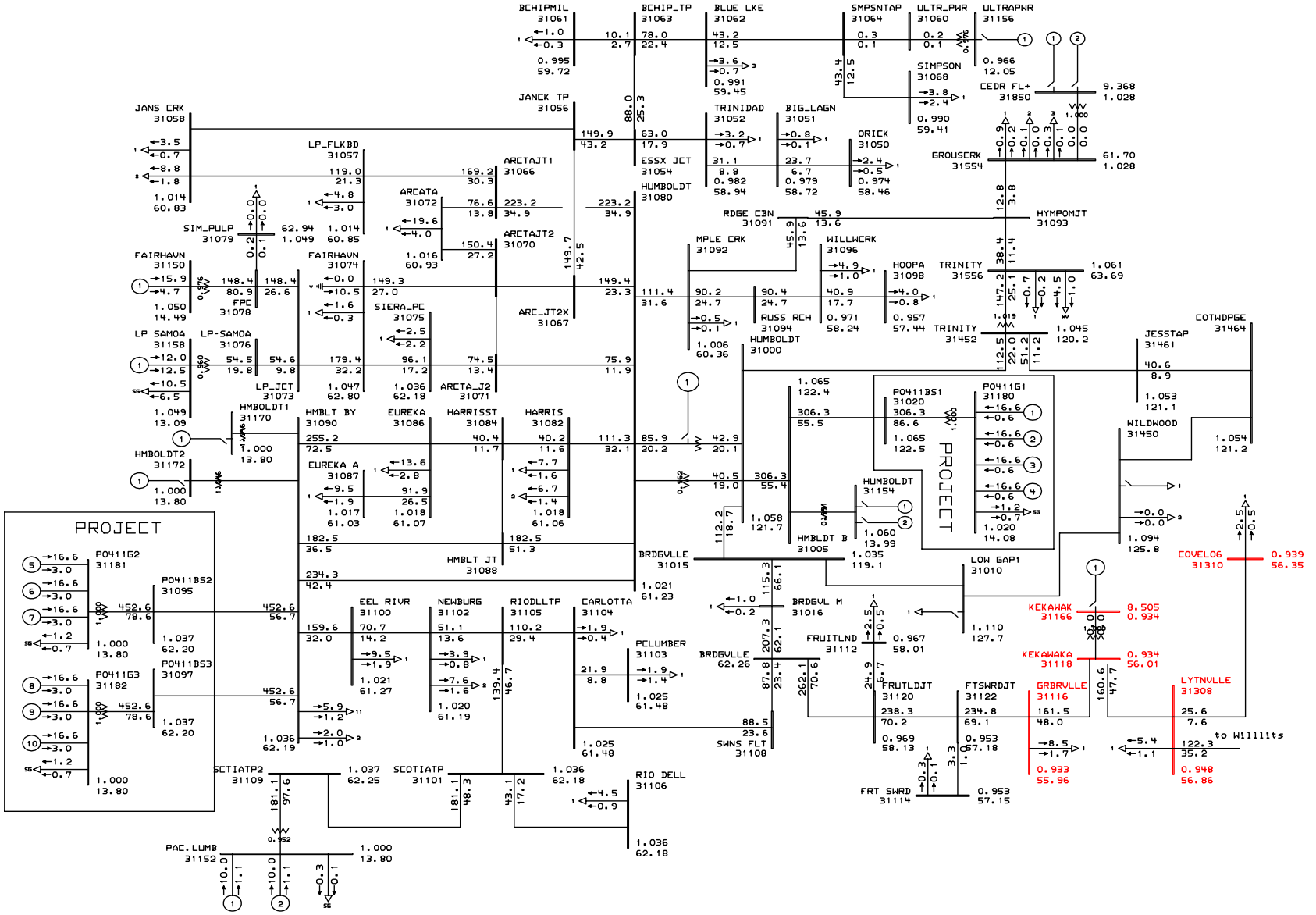

General Electric International, Inc. PSLF Program AMPS/Pct Mon Dec 12 06:52:35 2005

PG&E Tranmission Planning	PG&E 2004 BASE CASE SERIES - 2008 Humboldt Summer Peak Case Post-Project PATH15=-1615MW(S-N) PATH26=3333MW(N-S) PDCI=3105MW(N-S) COI=4736MW(N-S) RAMCO Humboldt Energy Facility SIS-2 Post-Project Mitigation 2	Plot 62 - 2008 Summer Peak - Post-Project - Mitigation 2 Outage: Brigdgeville - Cottonwood 115 kV Line	C:\pslf\pge\ramcohef2\draw\ram C:\pslf\pge\ramcohef2\cases\su Rating = 2

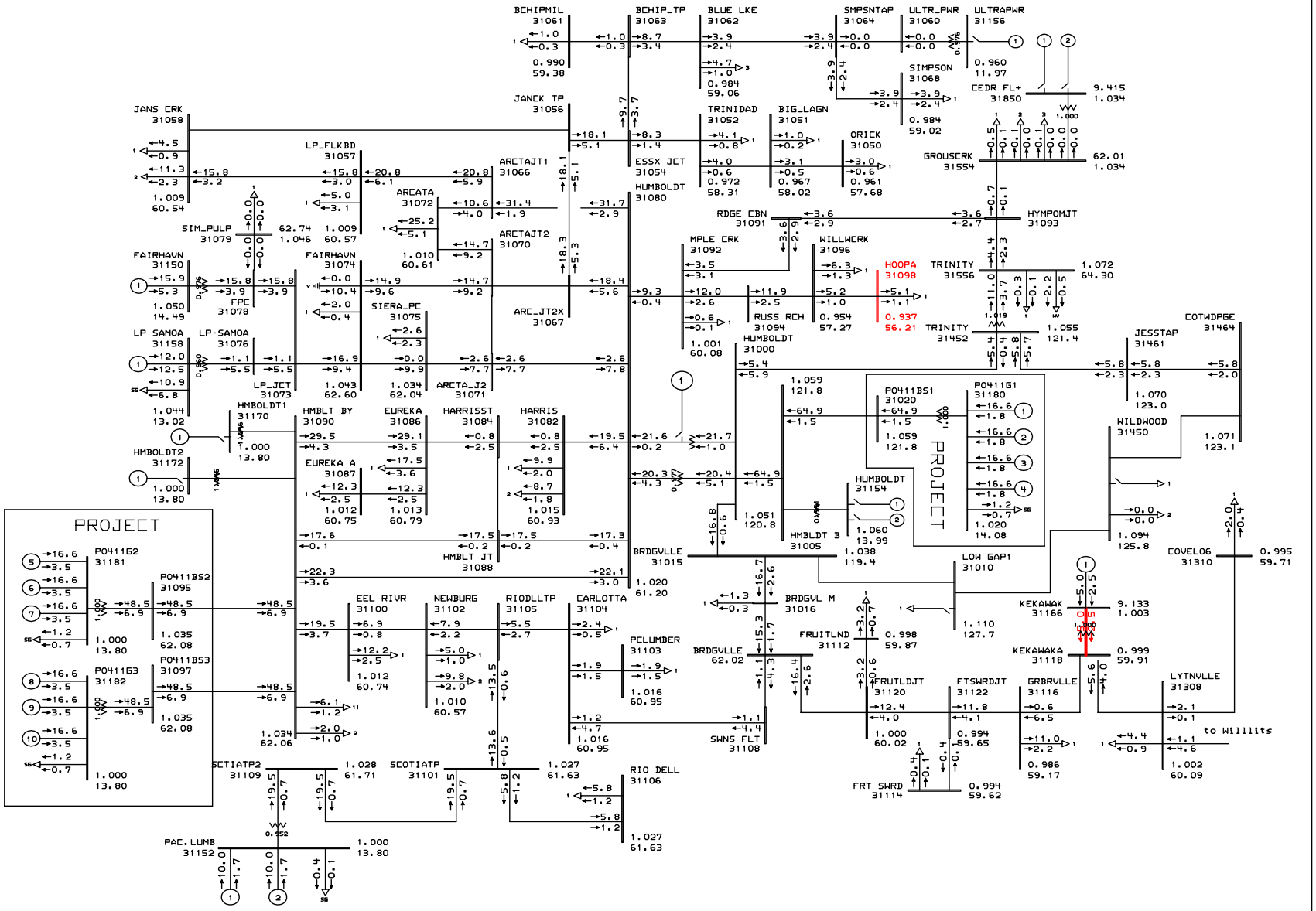

General Electric International, Inc. PSLF Program MW/MVAR Mon Dec 12 06:52:37 2005

PG&E Tranmission Planning	PG&E 2004 BASE CASE SERIES - 2008 Humboldt Winter Peak Case Post-Project PATH15=3536MW(S-N) PATH26=-675MW(N-S) PDCI=-1845MW(N-S) COI=-3110MW(N-S) RAMCO Humboldt Energy Facility SIS-2 Post-Project Mitigation 2	Plot 63 - 2008 Winter Peak - Post-Project - Mitigation 2 Outage: Brigdgeville - Cottonwood 115 kV Line	C:\pslf\pge\ramcohef2\draw\ram C:\pslf\pge\ramcohef2\cases\wi Rating = 4

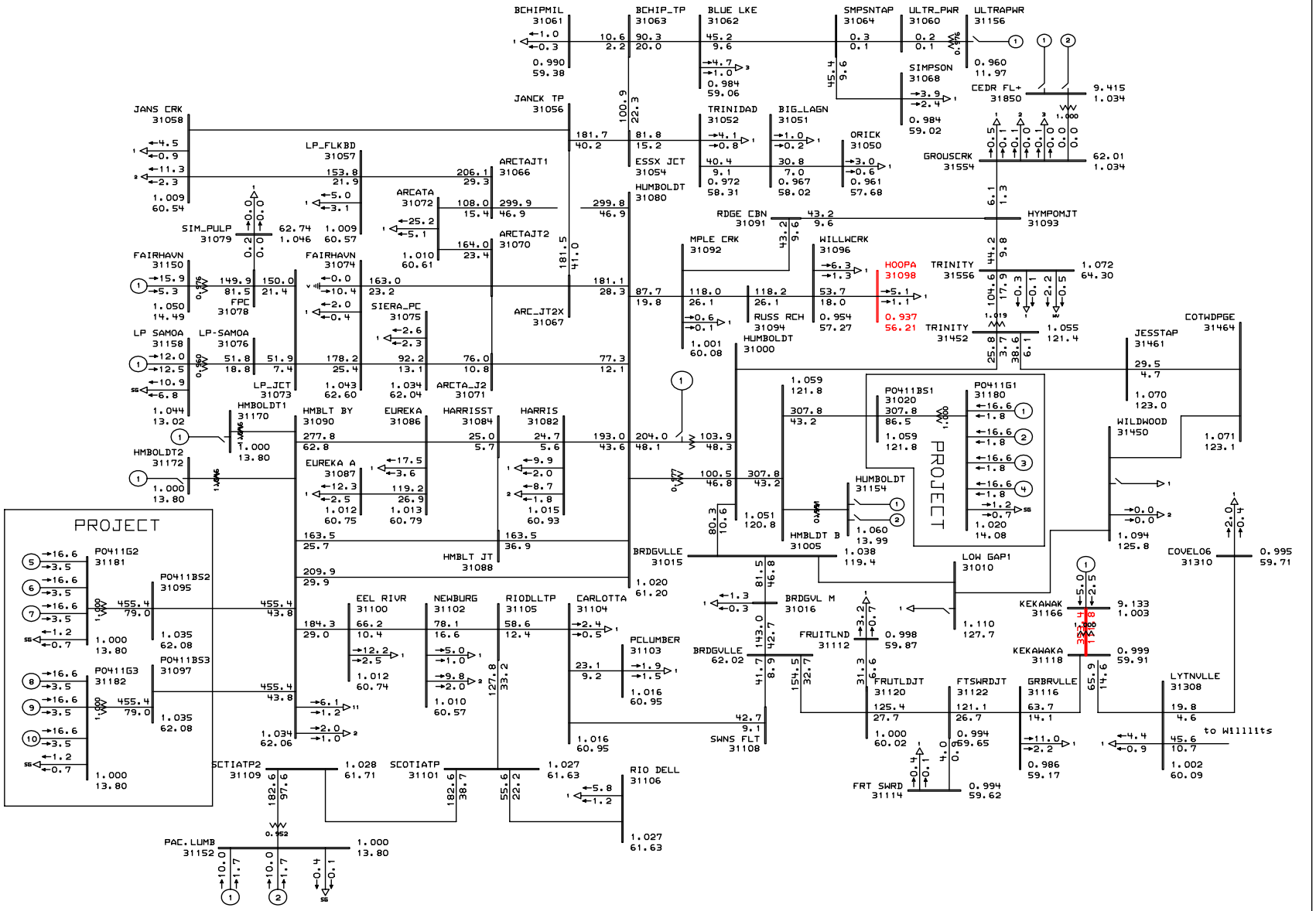

General Electric International, Inc. PSLF Program AMPS/Pct Mon Dec 12 06:52:37 2005

PG&E Tranmission Planning	PG&E 2004 BASE CASE SERIES - 2008 Humboldt Winter Peak Case Post-Project PATH15=3536MW(S-N) PATH26=-675MW(N-S) PDCI=-1845MW(N-S) COI=-3110MW(N-S) RAMCO Humboldt Energy Facility SIS-2 Post-Project Mitigation 2	Plot 64 - 2008 Winter Peak - Post-Project - Mitigation 2 Outage: Brigdgeville - Cottonwood 115 kV Line	C:\pslf\pge\ramcohef2\draw\ram C:\pslf\pge\ramcohef2\cases\wi Rating = 4

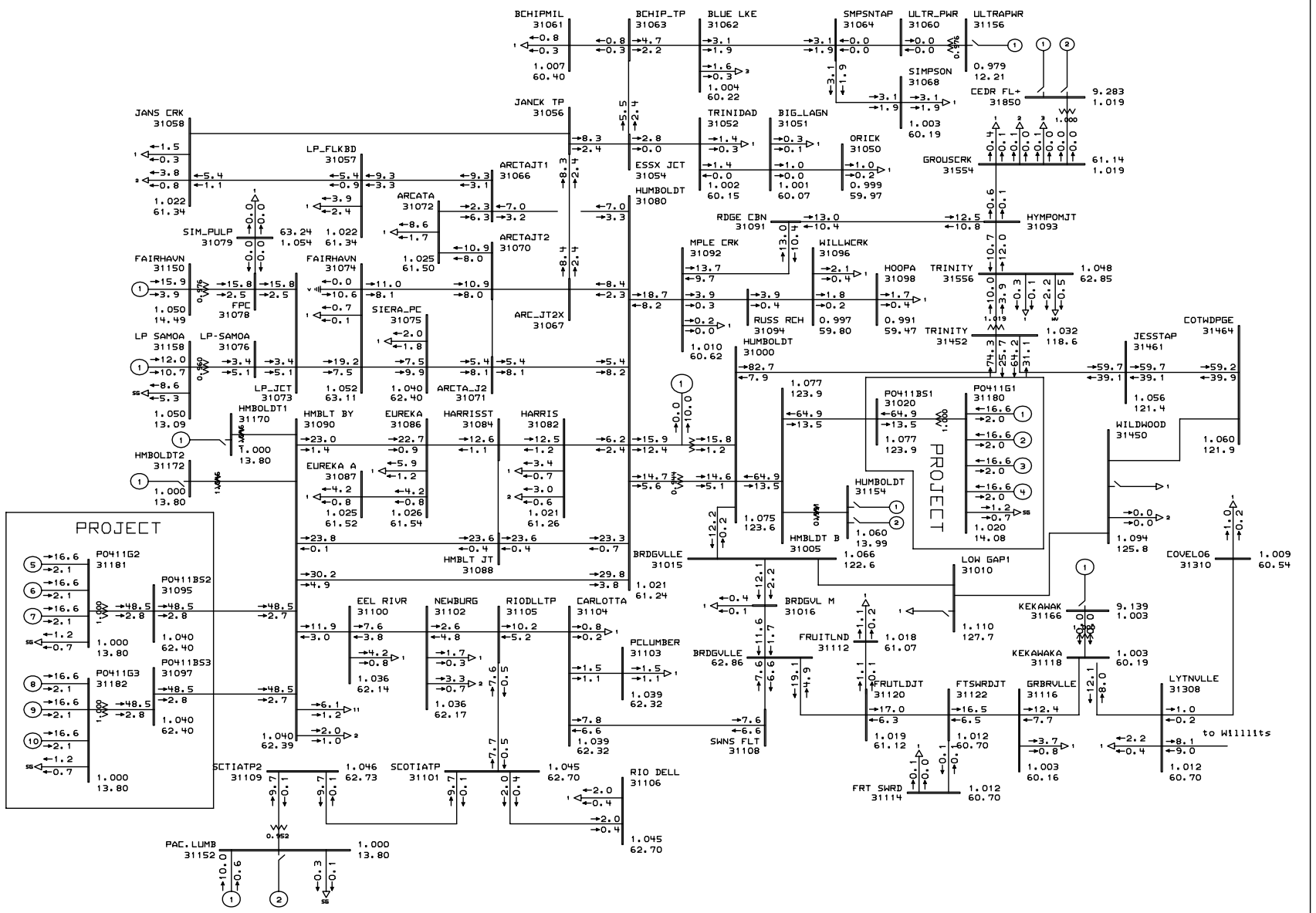

General Electric International, Inc. PSLF Program MW/MVAR Mon Dec 12 06:52:39 2005

PG&E Tranmission Planning	PG&E 2004 BASE CASE SERIES - 2008 Summer Off Peak Case Post-Project PATH15=4944MW(S-N) PATH26=-1785MW(N-S) PDCI=-1848MW(N-S) COI=-3636MW(N-S) RAMCO Humboldt Energy Facility SIS-2 Post-Project Mitigation 2	Plot 65 - 2008 Summer Off Peak - Post-Project - Mitigation 2 Outage: Brigdgeville - Cottonwood 115 kV Line	C:\pslf\pge\ramcohef2\draw\ram C:\pslf\pge\ramcohef2\cases\su Rating = 2

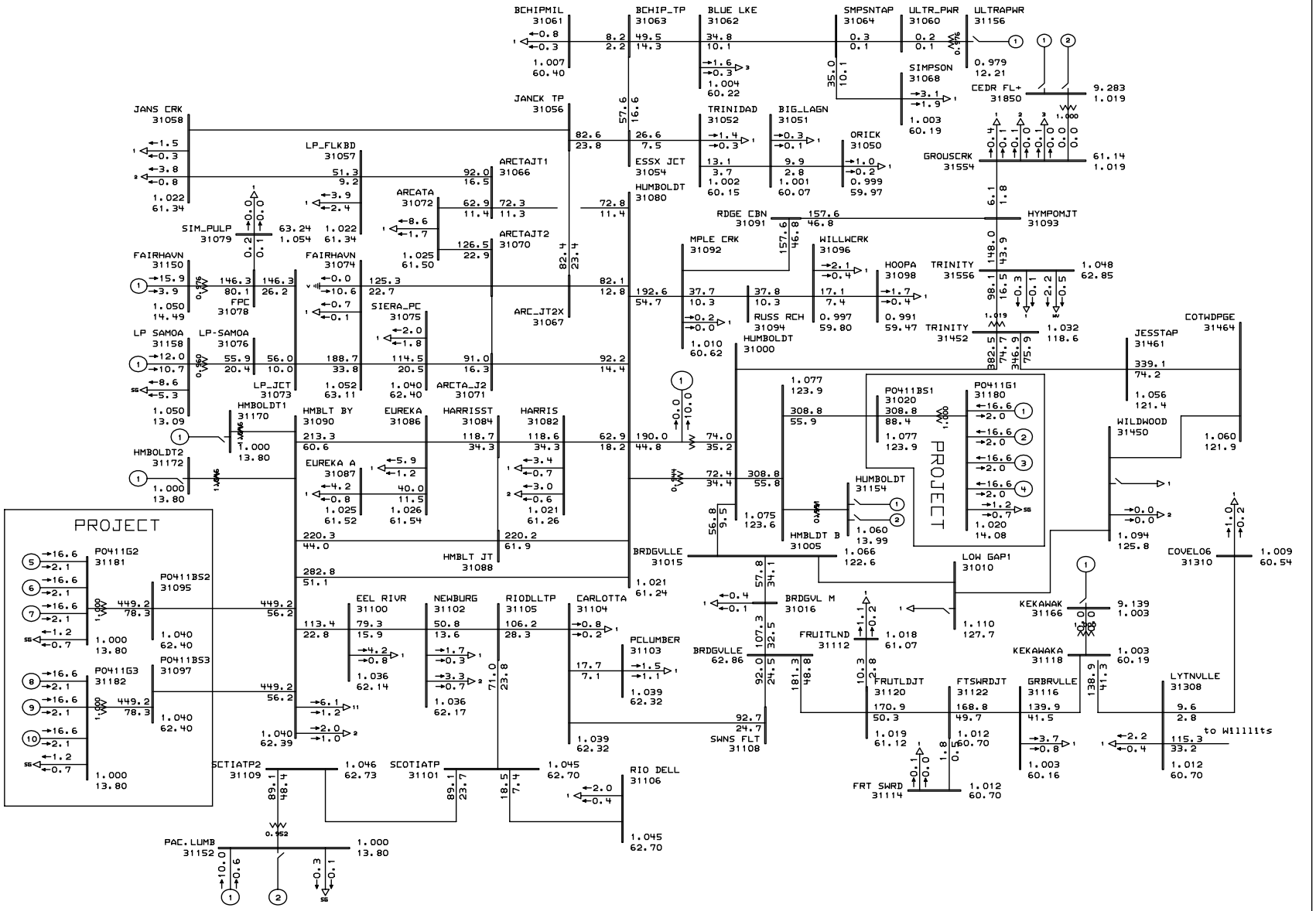

General Electric International, Inc. PSLF Program AMPS/Pct Mon Dec 12 06:52:39 2005

PG&E Tranmission Planning	PG&E 2004 BASE CASE SERIES - 2008 Summer Off Peak Case Post-Project PATH15=4944MW(S-N) PATH26=-1785MW(N-S) PDCI=-1848MW(N-S) COI=-3636MW(N-S) RAMCO Humboldt Energy Facility SIS-2 Post-Project Mitigation 2	Plot 66 - 2008 Summer Off Peak - Post-Project - Mitigation 2 Outage: Brigdgeville - Cottonwood 115 kV Line	C:\pslf\pge\ramcohef2\draw\ram C:\pslf\pge\ramcohef2\cases\su Rating = 2

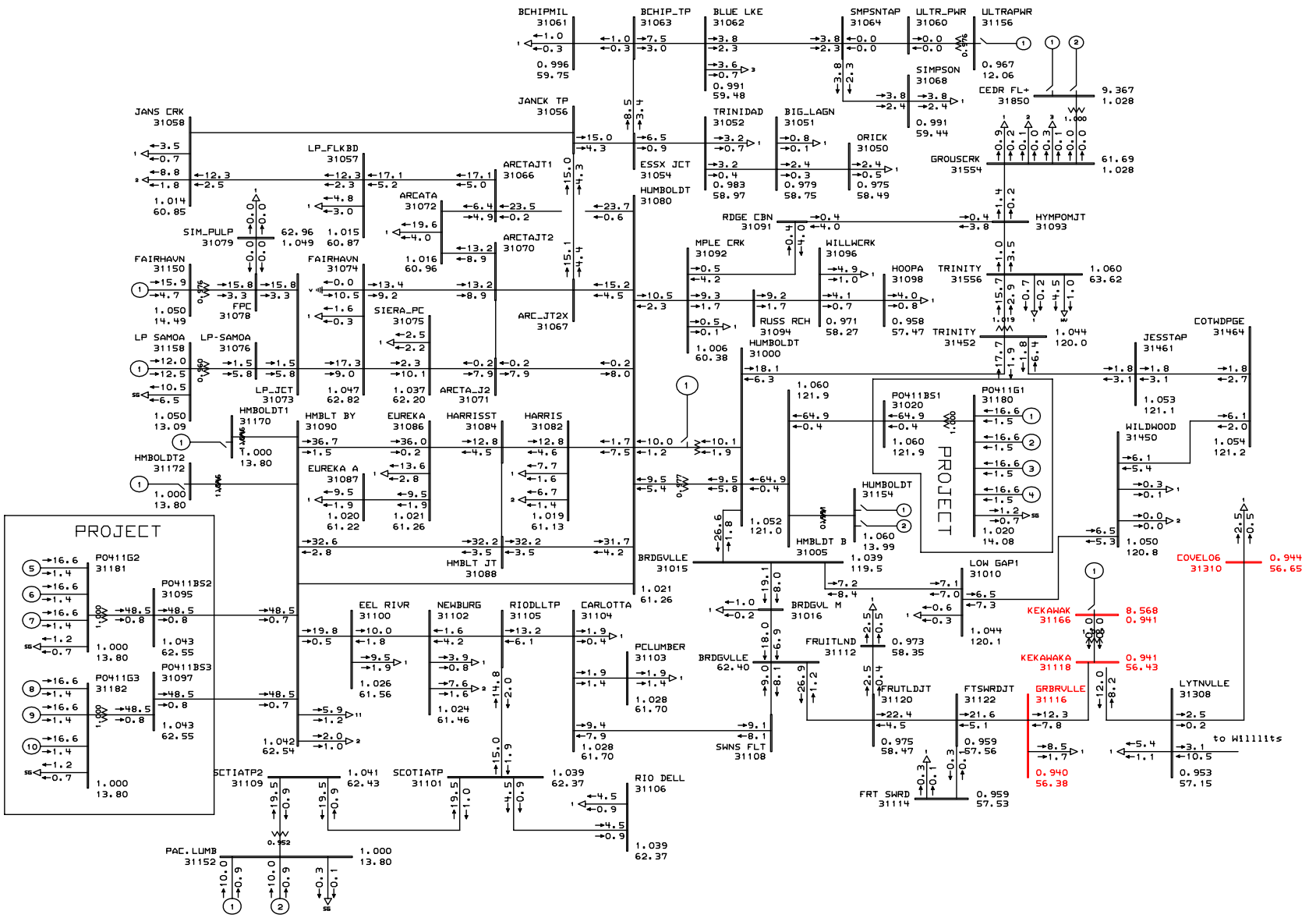

General Electric International, Inc. PSLF Program MW/MVAR Mon Dec 12 06:52:41 2005

PG&E Tranmission Planning	PG&E 2004 BASE CASE SERIES - 2008 Humboldt Summer Peak Case Post-Project PATH15=-1615MW(S-N) PATH26=3333MW(N-S) PDCI=3105MW(N-S) COI=4736MW(N-S) RAMCO Humboldt Energy Facility SIS-2 Post-Project Mitigation 2	Plot 67 - 2008 Summer Peak - Post-Project - Mitigation 2 Outage: Humboldt - Humboldt Bay #2 60 kV Line	C:\pslf\pge\ramcohef2\draw\ram C:\pslf\pge\ramcohef2\cases\su Rating = 2

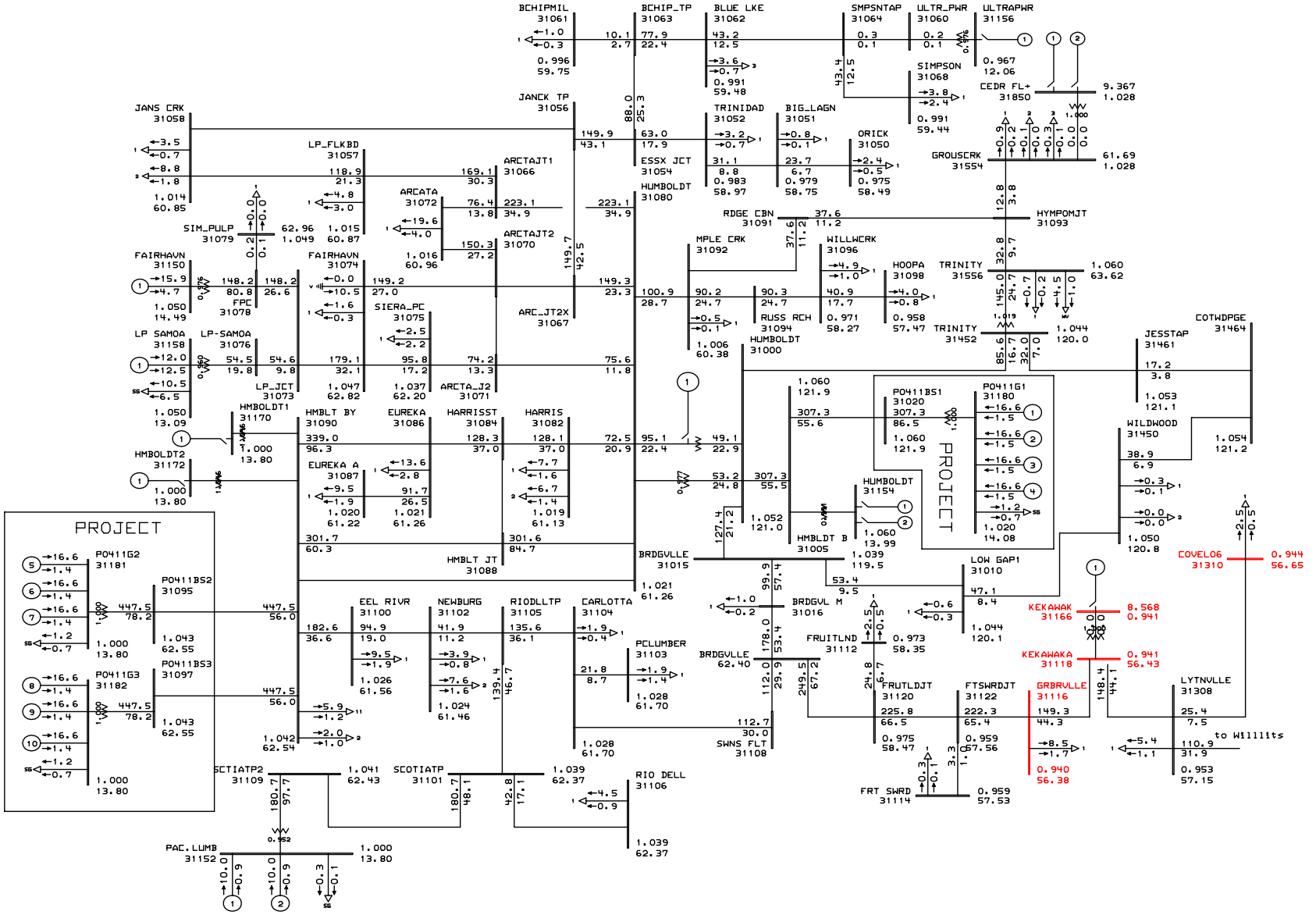

General Electric International, Inc. PSLF Program AMPS/Pct Mon Dec 12 06:52:41 2005

PG&E Tranmission Planning	PG&E 2004 BASE CASE SERIES - 2008 Humboldt Summer Peak Case Post-Project PATH15=-1615MW(S-N) PATH26=3333MW(N-S) PDCI=3105MW(N-S) COI=4736MW(N-S) RAMCO Humboldt Energy Facility SIS-2 Post-Project Mitigation 2	Plot 68 - 2008 Summer Peak - Post-Project - Mitigation 2 Outage: Humboldt - Humboldt Bay #2 60 kV Line	C:\pslf\pge\ramcohef2\draw\ram C:\pslf\pge\ramcohef2\cases\su Rating = 2

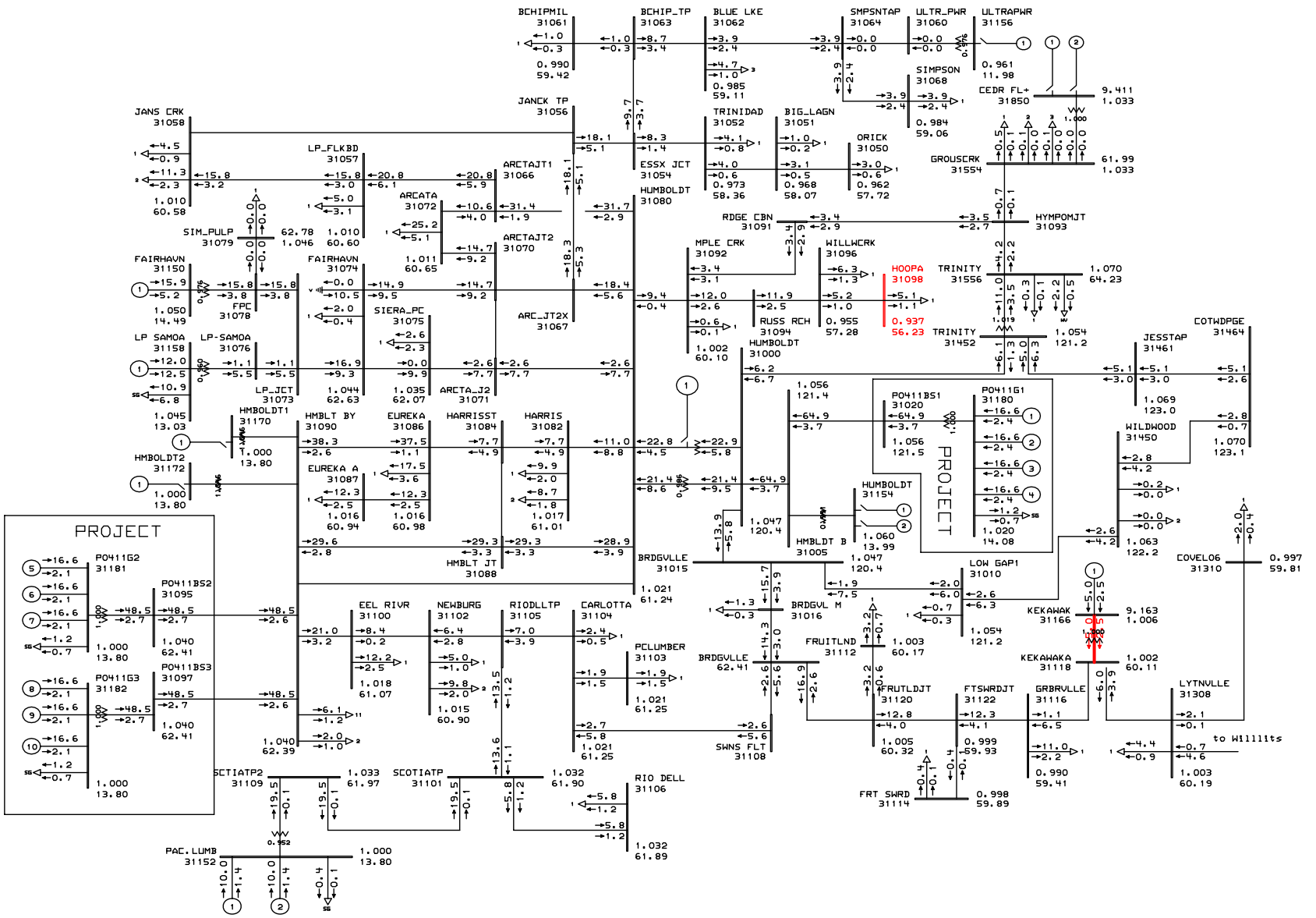

General Electric International, Inc. PSLF Program MW/MVAR Mon Dec 12 06:52:43 2005

PG&E Tranmission Planning	PG&E 2004 BASE CASE SERIES - 2008 Humboldt Winter Peak Case Post-Project PATH15=3536MW(S-N) PATH26=-675MW(N-S) PDCI=-1845MW(N-S) COI=-3110MW(N-S) RAMCO Humboldt Energy Facility SIS-2 Post-Project Mitigation 2	Plot 69 - 2008 Winter Peak - Post-Project - Mitigation 2 Outage: Humboldt - Humboldt Bay #2 60 kV Line	C:\pslf\pge\ramcohef2\draw\ram C:\pslf\pge\ramcohef2\cases\wi Rating = 4

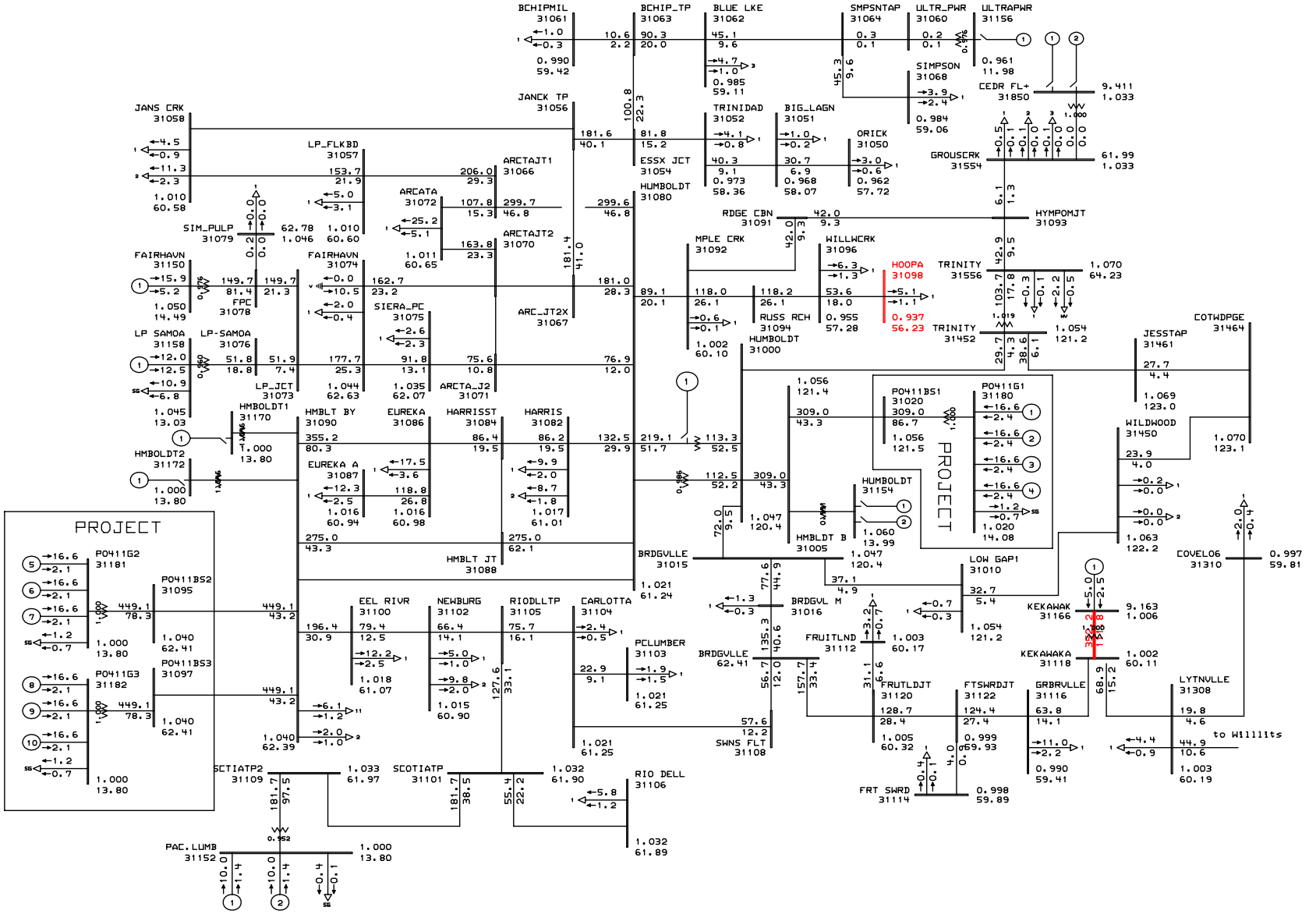

General Electric International, Inc. PSLF Program AMPS/Pct Mon Dec 12 06:52:43 2005

PG&E Tranmission Planning	PG&E 2004 BASE CASE SERIES - 2008 Humboldt Winter Peak Case Post-Project PATH15=3536MW(S-N) PATH26=-675MW(N-S) PDCI=-1845MW(N-S) COI=-3110MW(N-S) RAMCO Humboldt Energy Facility SIS-2 Post-Project Mitigation 2	Plot 70 - 2008 Winter Peak - Post-Project - Mitigation 2 Outage: Humboldt - Humboldt Bay #2 60 kV Line	C:\pslf\pge\ramcohef2\draw\ram C:\pslf\pge\ramcohef2\cases\wi Rating = 4

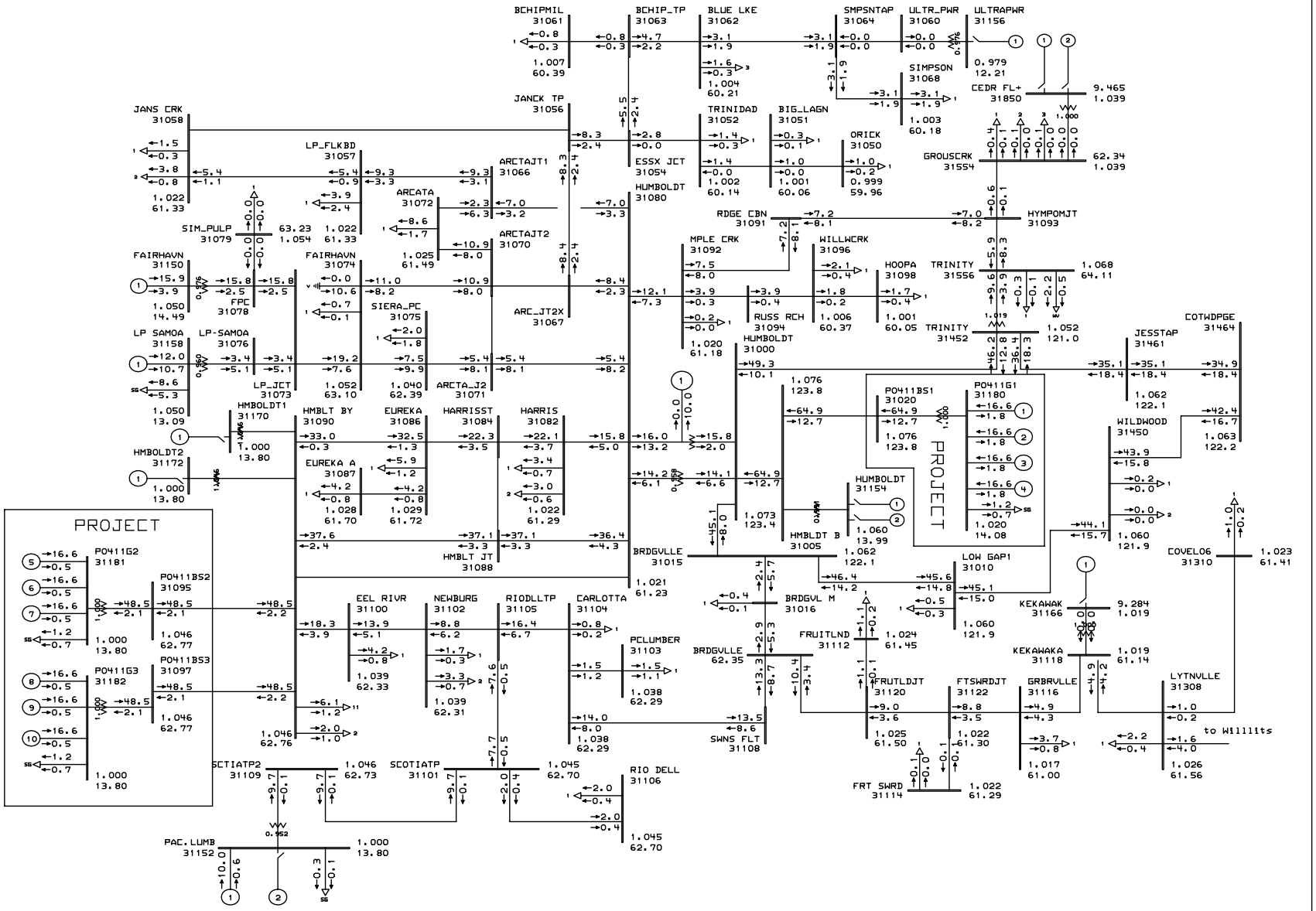

General Electric International, Inc. PSLF Program MW/MVAR Mon Dec 12 06:52:45 2005

PG&E Tranmission Planning	PG&E 2004 BASE CASE SERIES - 2008 Summer Off Peak Case Post-Project PATH15=4944MW(S-N) PATH26=-1785MW(N-S) PDCI=-1848MW(N-S) COI=-3636MW(N-S) RAMCO Humboldt Energy Facility SIS-2 Post-Project Mitigation 2	Plot 71 - 2008 Summer Off Peak - Post-Project - Mitigation 2 Outage: Humboldt - Humboldt Bay #2 60 kV Line	C:\pslf\pge\ramcohef2\draw\ram C:\pslf\pge\ramcohef2\cases\su Rating = 2

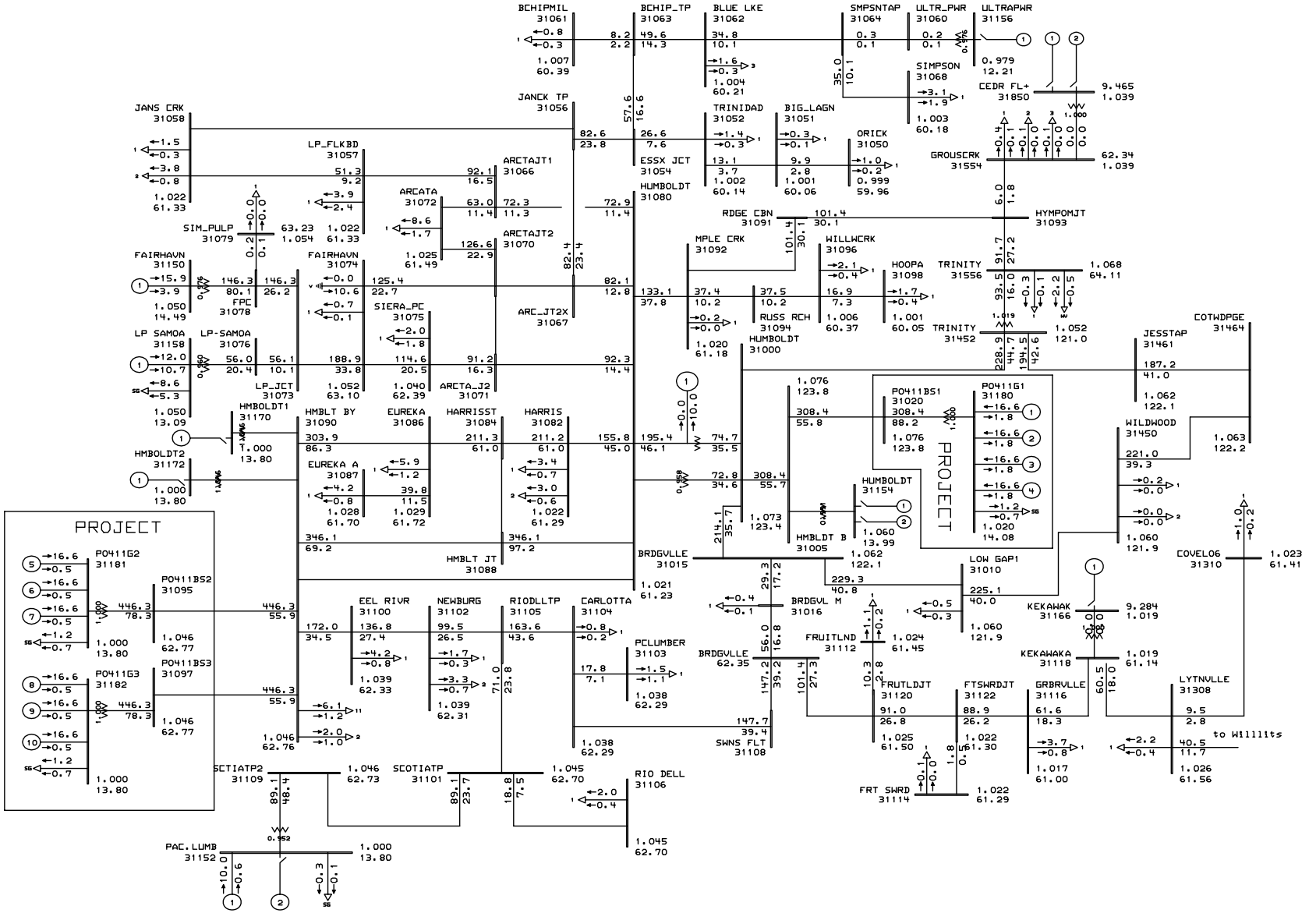

General Electric International, Inc. PSLF Program AMPS/Pct Mon Dec 12 06:52:45 2005

PG&E Tranmission Planning	PG&E 2004 BASE CASE SERIES - 2008 Summer Off Peak Case Post-Project PATH15=4944MW(S-N) PATH26=-1785MW(N-S) PDCI=-1848MW(N-S) COI=-3636MW(N-S) RAMCO Humboldt Energy Facility SIS-2 Post-Project Mitigation 2	Plot 72 - 2008 Summer Off Peak - Post-Project - Mitigation 2 Outage: Humboldt - Humboldt Bay #2 60 kV Line	C:\pslf\pge\ramcohef2\draw\ram C:\pslf\pge\ramcohef2\cases\su Rating = 2

Appendix E

Generator Dynamic Data

Machine Data: Model: GENSAL

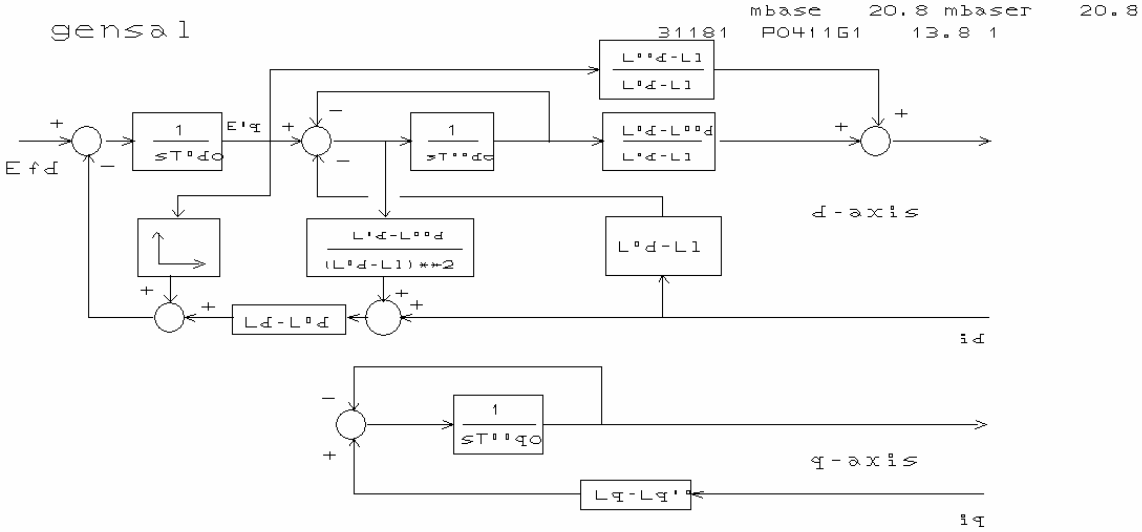

ld	1.5720	lpq	0.0000	tpdo	6.3480	s1	0.1330
lpd	0.3370	lppq	0.1870	tppdo	0.0420	s12	0.3750
lppd	0.1870	ll	0.1610	tpqo	0.0000	h	1.5300
lq	0.8600	ra	0.0035	tppqo	0.1512	d	0.0000

Variable	Description	Value
Tdop	D-axis transient rotor time constant, set	6.348
Tppdo	D-axis sub-transient rotor time constant, sec	0.042
Tpqo	Q-axis transient rotor time constant, sec	0.0
Tppqo	Q-axis sub-transient rotor time constant, sec	0.1512
H	Inertia constant, sec	1.53
D	Damping factor, pu	0.00
Ld	D-axis synchronous reactance, pu	1.572
Lq	Q-axis synchronous reactance, pu	0.86
Lpd	D-axis transient synchronous reactance, pu	0.337
Lpq	Q-axis transient synchronous reactance, pu	0
Lppd	D-axis subtransient synchronous reactance, pu	0.187
Ll	Stator leakage reactance, pu	0.161
s1	Saturation factor at 1 pu flux	0.133
s12	Saturation factor at 1.2 pu flux	0.375
Ra	Stator resistance, pu	0.0035
Rcomp	Compounding resistance voltage control, pu	0.00
Xcomp	Compounding reactance voltage control, pu	0.00

Excitation Data: Model: EXAC8b

mbase 20.8 mbaser 20

31181 P041161 13.8 1

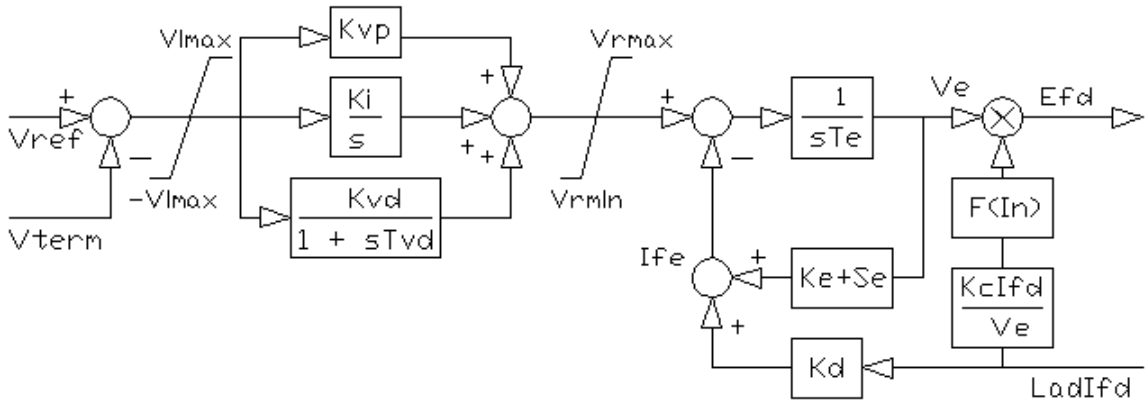

tr	0.0200	tvd	0.0300	vrmin	0.0000	kd	0.0000
kvp	7.0200	vimax	0.5450	ke	1.0000	e1	3.9500
kvi	9.1200	ta	0.0000	te	0.1200	se1	0.9530
kvd	1.4700	vrmax	5.0700	kc	0.0000	e2	5.2700

Variable	Description	Value
Tr	Voltage transducer time constant, sec	0.02
Kvp	Voltage regulator proportional gain	7.02
Kvi	Voltage regulator integral gain	9.12
Kvd	Voltage regulator derivative gain	1.47
Tvd	Voltage regulator derivative time constant, sec	0.03
Vimax	Voltage regulator input limit, p.u.	0.545
Ta	Voltage regulator time constant, sec	0.0
Vrmax	Maximum controller output, p.u.	5.07
Vrmin	Minimum controller output, p.u.	0.0
Ke	Exciter field proportional constant	1.0
Te	Exciter time constant, sec	0.12
Kc	Rectifier regulation factor, p.u.	0.0
Kd	Exciter regulation factor, p.u.	0.0
E1	Exciter flux at knee of curve, p.u.	3.95
Se1	Saturation factor at knee	0.953
E2	Maximum exciter, p.u.	5.27
Se2	Saturation factor at max flux	0.996

PSS Data: Model PSS2a

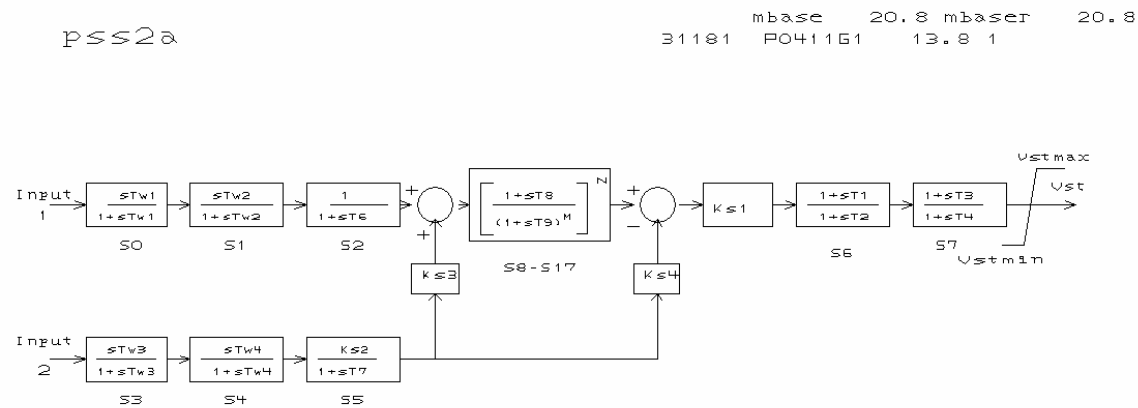

j1	1.0000	tw1	10.0000	t6	0.1000	ks4	1.0000
k1	0.0000	tw2	10.0000	t7	0.0000	t8	0.3000
j2	3.0000	tw3	10.0000	ks2	0.3300	t9	0.1500
k2	0.0000	tw4	10.0000	ks3	1.0000	n	1.0000

Variable	Description	Value
j1	Input signal #1 code	1
k1	Input signal #1 remote bus number	0
j2	Input signal #2 code	3
k2	Input signal #2 remote bus number	0
tw1	First washout on signal #1, sec	10.0
tw2	First washout on signal #1, sec	10.0
tw3	First washout on signal #2, sec	10.0
tw4	First washout on signal #2, sec	10.0
t6	Time constant on signal #1, sec	0.1
t7	Time constant on signal #2, sec	0.00
ks2	Gain signal #2	0.33
ks3	Gain signal #2	1.0
ks4	Gain signal #2	1.0
t8	Lead of ramp tracking filter	0.30
t9	Lag of ramp tracking filter	0.15
N	Order of ramp tracking filter	1.0
M	Order of ramp tracking filter	5.0
ks1	Stabilizer gain	0.10
t1	Lead/lag time constants, sec	0.16
t2	Lead/lag time constants, sec	0.02
t3	Lead/lag time constants, sec	0.16

t4	Lead/lag time constants, sec	0.02
vstmax	Stabilizer output max limit, p.u.	0.20
vstmin	Stabilizer output min limit, p.u.	-0.20

Governor Data: GGOV1

mbase 20.8 mbaser 20

31181 P04116 13.8 1

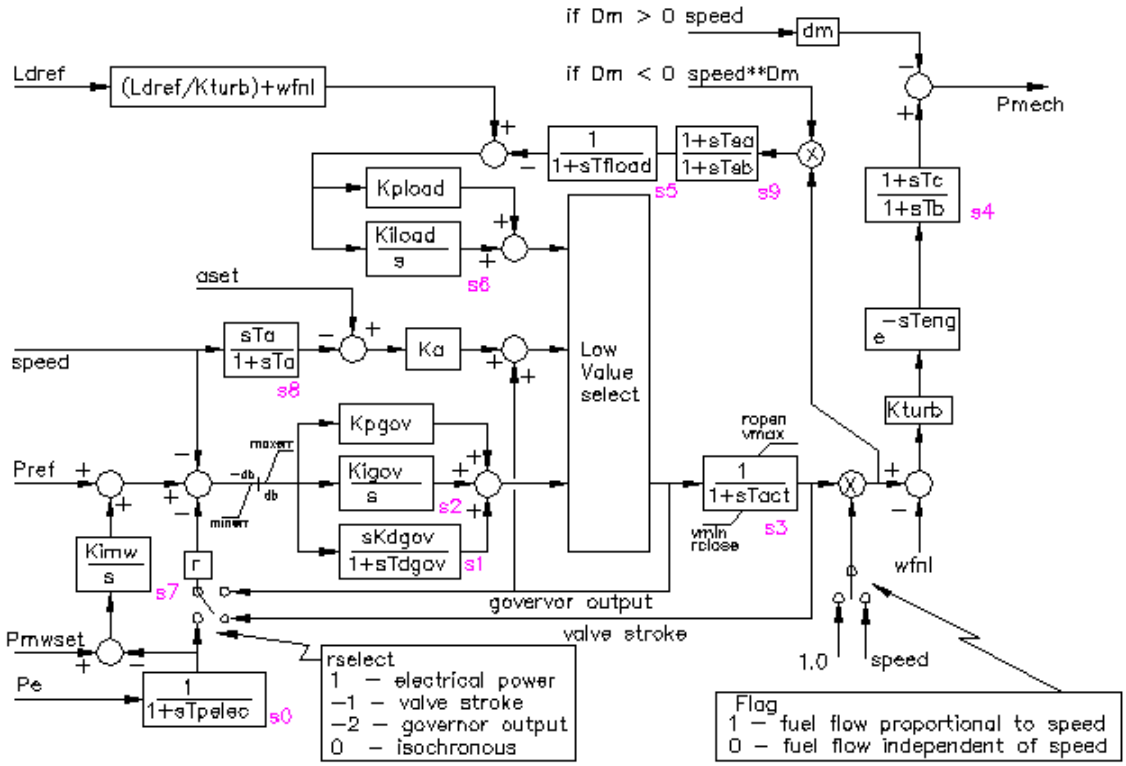

r	0.0400	minerr	-10.0000	tdgov	0.0100	kturb	1.0000
rselect	1.0000	kpgov	5.9600	vmax	1.1000	wfnl	0.0710
tpelec	0.1600	kigov	5.9600	vmin	0.0000	tb	1.0000
maxerr	10.0000	kdgov	0.0010	tact	0.0100	tc	1.0000

Variable	Description	Value
R	Permanent droop, p.u.	0.04
Rselect	Selection for feedback signal for droop	1
Tpelec	Electrical power transducer time constant, sec	1
Maxerr	Maximum value of speed error signal	10.0
Minerr	Minimum value of speed error signal	-10.0
Kpgov	Governor proportional gain	5.96
Kigov	Governor integral gain	5.96
Kdgov	Governor derivative gain	.000993
Tdgov	Governor derivative controller time constant, sec	0.01

Vmax	Maximum valve position limit	1.1
Vmin	Minimum valve position limit	0.0
Tact	Actuator time constant, sec	0.01
Kturb	Valve-to-power gain	1.0
Wfnl	No load fuel flow, p.u.	0.071
Tb	Power development lag time constant	1.0
Tc	Power development lead time constant	1.0
Flag	Switch for turbine output	1.0
Teng	Transport lag time constant for diesel engine	0.03
Tfload	Load limiter time constant	1.0
Kpload	Load limiter proportional gain for PI controller	1.0
Kiload	Load limiter integral gain for PI controller	1.0
Ldref	Load limiter reference value, p.u.	10.0
Dm	Mechanical damping coefficient, p.u.	0.0
Ropen	Maximum valve opening rate, p.u./sec	10.0
Rclose	Minimum valve closing rate, p.u./sec	-10.0
Kimw	Power controller (reset) gain	0.0
Pmwset	Power controller setpoint, MW	0.0
aset	Acceleration limiter setpoint, p.u./sec	0.0
Ka	Acceleration limiter Gain	0.0
Ta	Acceleration limiter time constant, sec	0.0
Db	Speed governor dead band	0.0
Tsa	Temperature detection lead time constant, sec	0.0
Tsb	Temperature detection lag time constant, sec	0.0
Rup	Maximum rate of load limit increase	0.0
Rdown	Maximum rate of load limit decrease	0.0
Tbd	Speed Ratio Valve and Fuel Supply lag time constant, sec	0.0
Tcd	Speed Ratio Valve and Fuel Supply lead time constant, sec	0.0

Appendix F

Dynamic Stability Plots

P0411 Project System Impact Study

Selected PG&E Bus Voltage Plots Adjacent to Fault

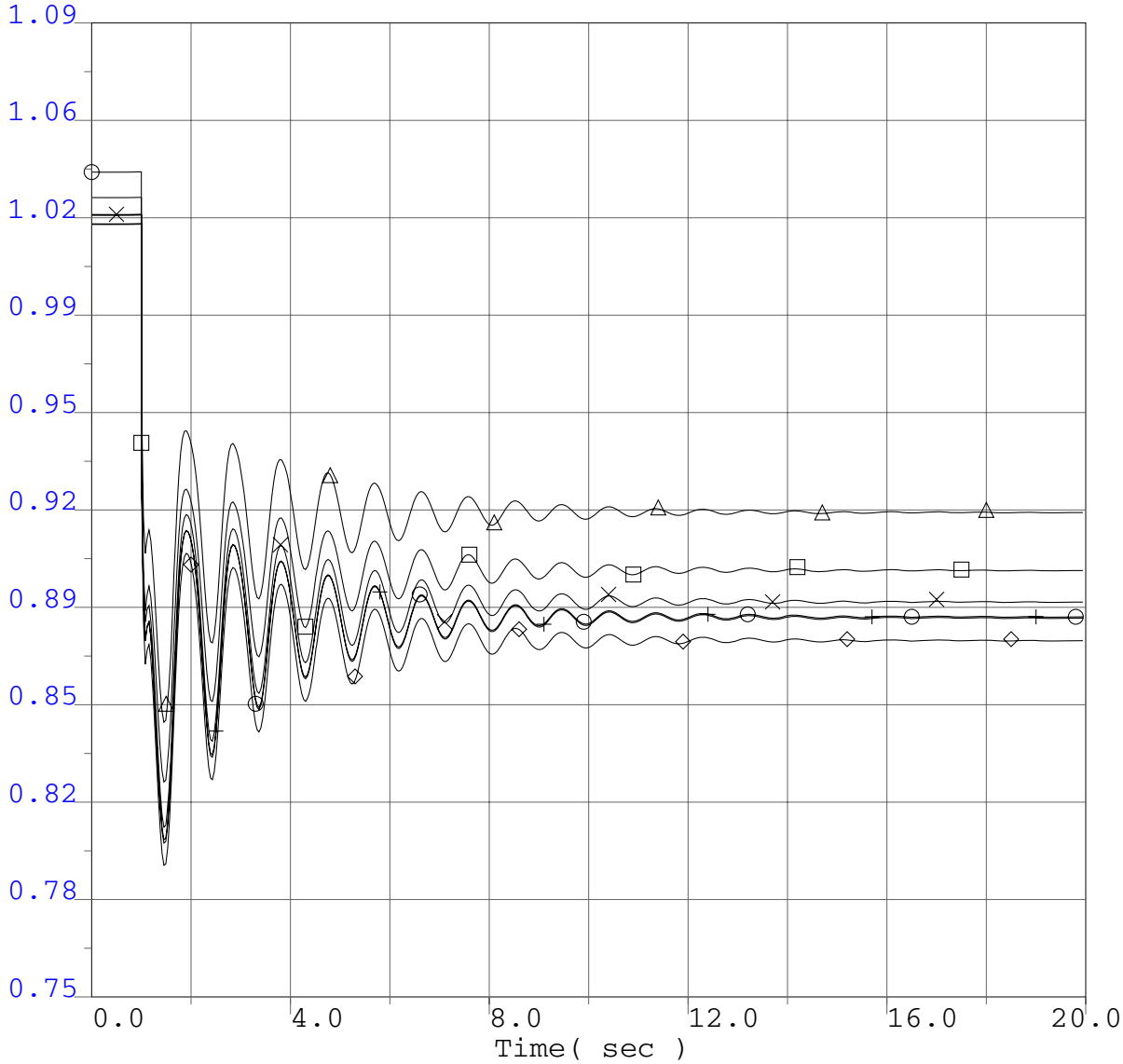

○	0.75	vbul	31090	HMBLT BY	60.0	"*" 1	1.09
×	0.75	vbus	31080	HUMBOLDT	60.0	"*" 1	1.09
□	0.75	vbul	31102	NEWBURG	60.0	"*" 1	1.09
△	0.75	vbus	31105	RIODLLTP	60.0	"*" 1	1.09
◇	0.75	vbul	31086	EUREKA	60.0	"*" 1	1.09
+	0.75	vbul	31082	HARRIS	60.0	"*" 1	1.09

P0411 Project System Impact Study
2008 Summer Peak Base Case
P0411 @ 166.4MW
P0411 Load Rejection
No Fault

P0411 Project System Impact Study

Selected PG&E Bus Frequency Plots Adjacent to Fault

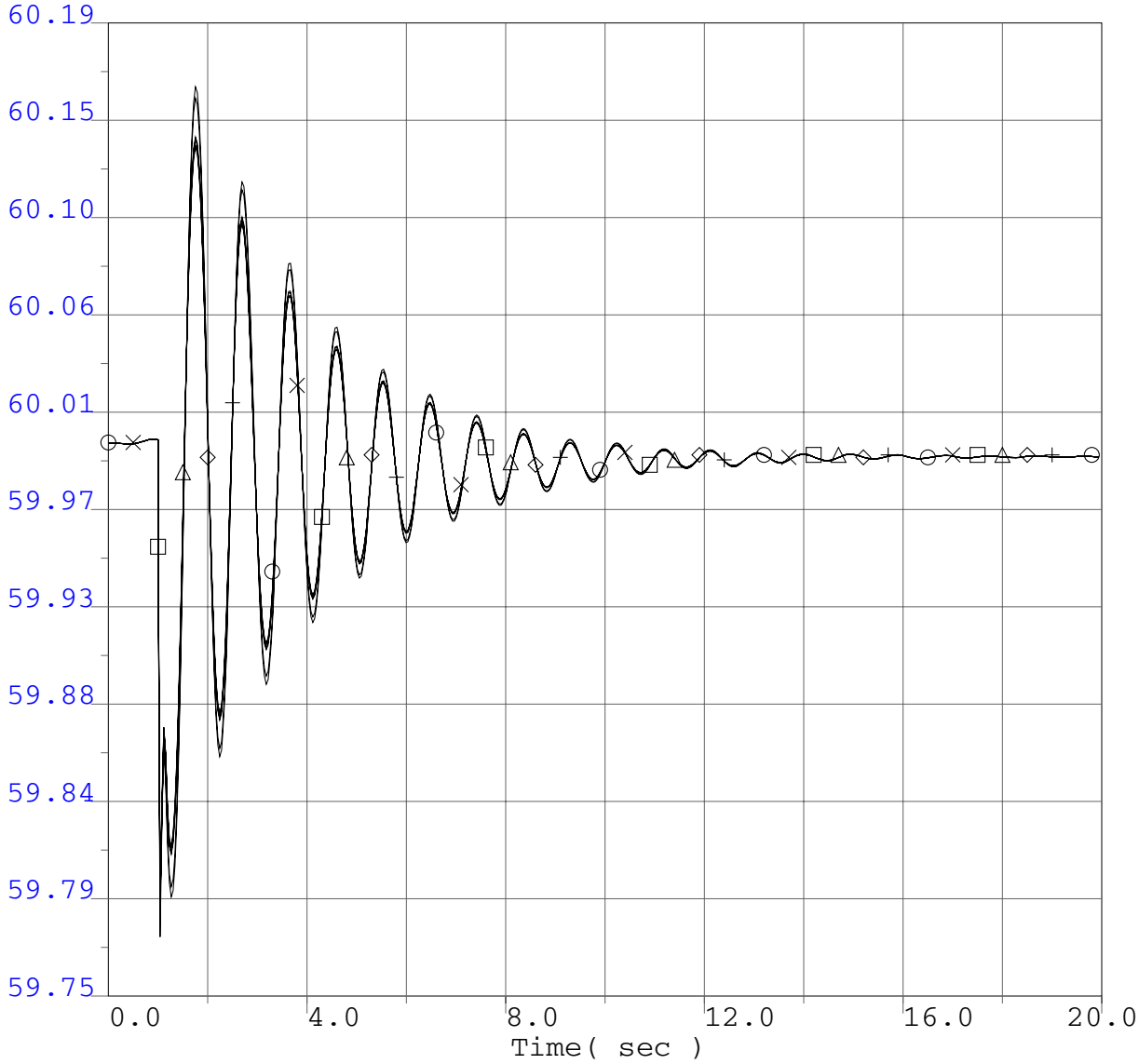

○	59.75	fbul	31090	HMBLT BY	60.0	"*" 1	60.19
×	59.75	fbus	31080	HUMBOLDT	60.0	"*" 1	60.19
□	59.75	fbul	31102	NEWBURG	60.0	"*" 1	60.19
△	59.75	fbus	31105	RIODLLTP	60.0	"*" 1	60.19
◇	59.75	fbul	31086	EUREKA	60.0	"*" 1	60.19
+	59.75	fbul	31082	HARRIS	60.0	"*" 1	60.19

P0411 Project System Impact Study
2008 Summer Peak Base Case
P0411 @ 166.4MW
P0411 Load Rejection
No Fault

P0411 Project System Impact Study

Project Generator Terminal Voltages

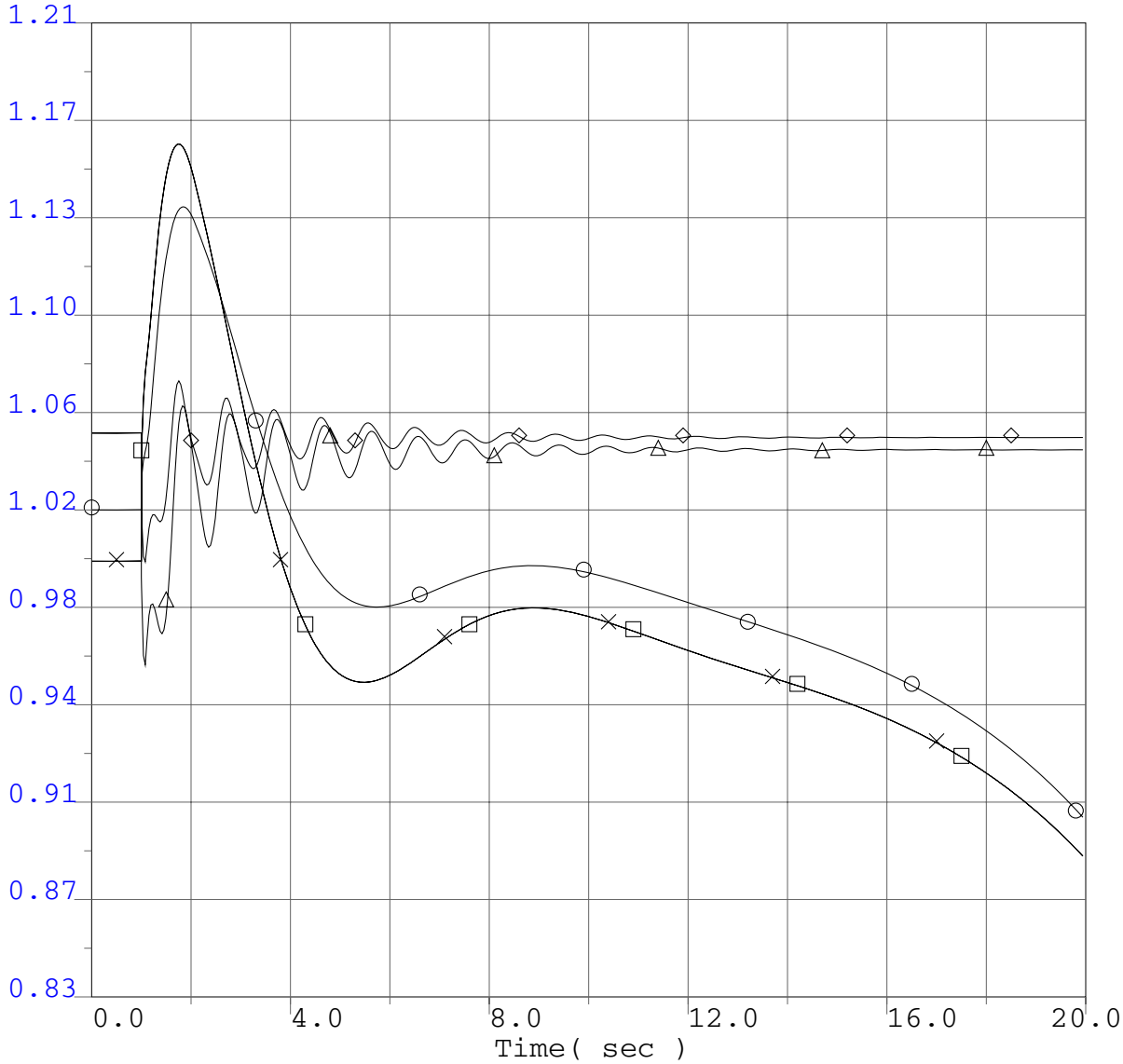

○ 0.83	vt	31180	P0411G1	13.8	"1"	1	1.21
× 0.83	vt	31181	P0411G2	13.8	"5"	1	1.21
□ 0.83	vt	31182	P0411G3	13.8	"8"	1	1.21
△ 0.83	vt	31150	FAIRHAVN	13.8	"1"	1	1.21
◇ 0.83	vt	31158	LP SAMOA	12.5	"1"	1	1.21

P0411 Project System Impact Study
2008 Summer Peak Base Case
P0411 @ 166.4MW
P0411 Load Rejection
No Fault

P0411 Project System Impact Study

Project Generator Rotor Speed

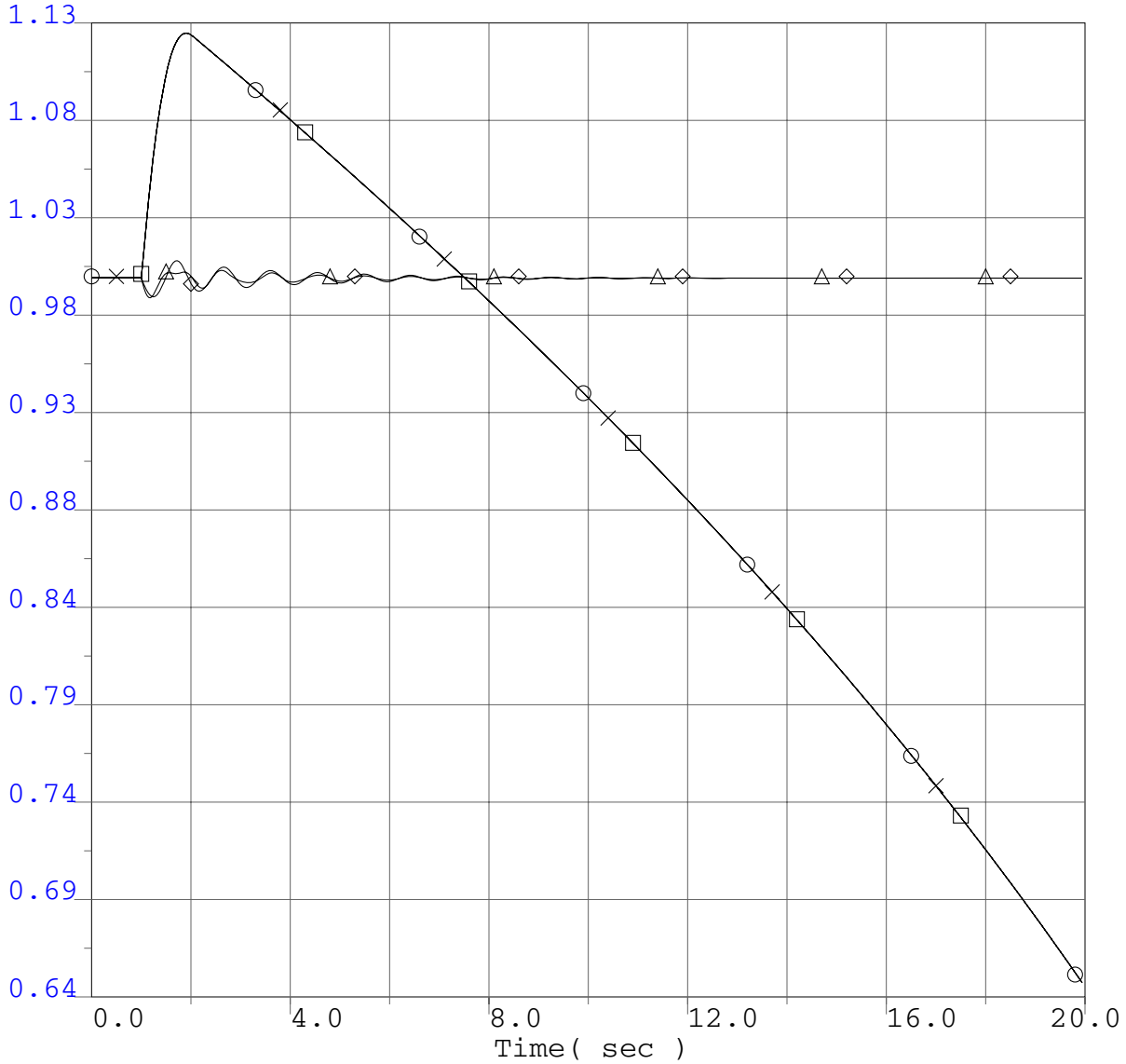

○	0.6435	spd	31180	P0411G1	13.8	"1" 1	1.1264
×	0.6435	spd	31181	P0411G2	13.8	"5" 1	1.1264
□	0.6435	spd	31182	P0411G3	13.8	"8" 1	1.1264
△	0.6435	spd	31150	FAIRHAVN	13.8	"1" 1	1.1264
◇	0.6435	spd	31158	LP SAMOA	12.5	"1" 1	1.1264

P0411 Project System Impact Study
2008 Summer Peak Base Case
P0411 @ 166.4MW
P0411 Load Rejection
No Fault

P0411 Project System Impact Study

Project Generator Terminal Power

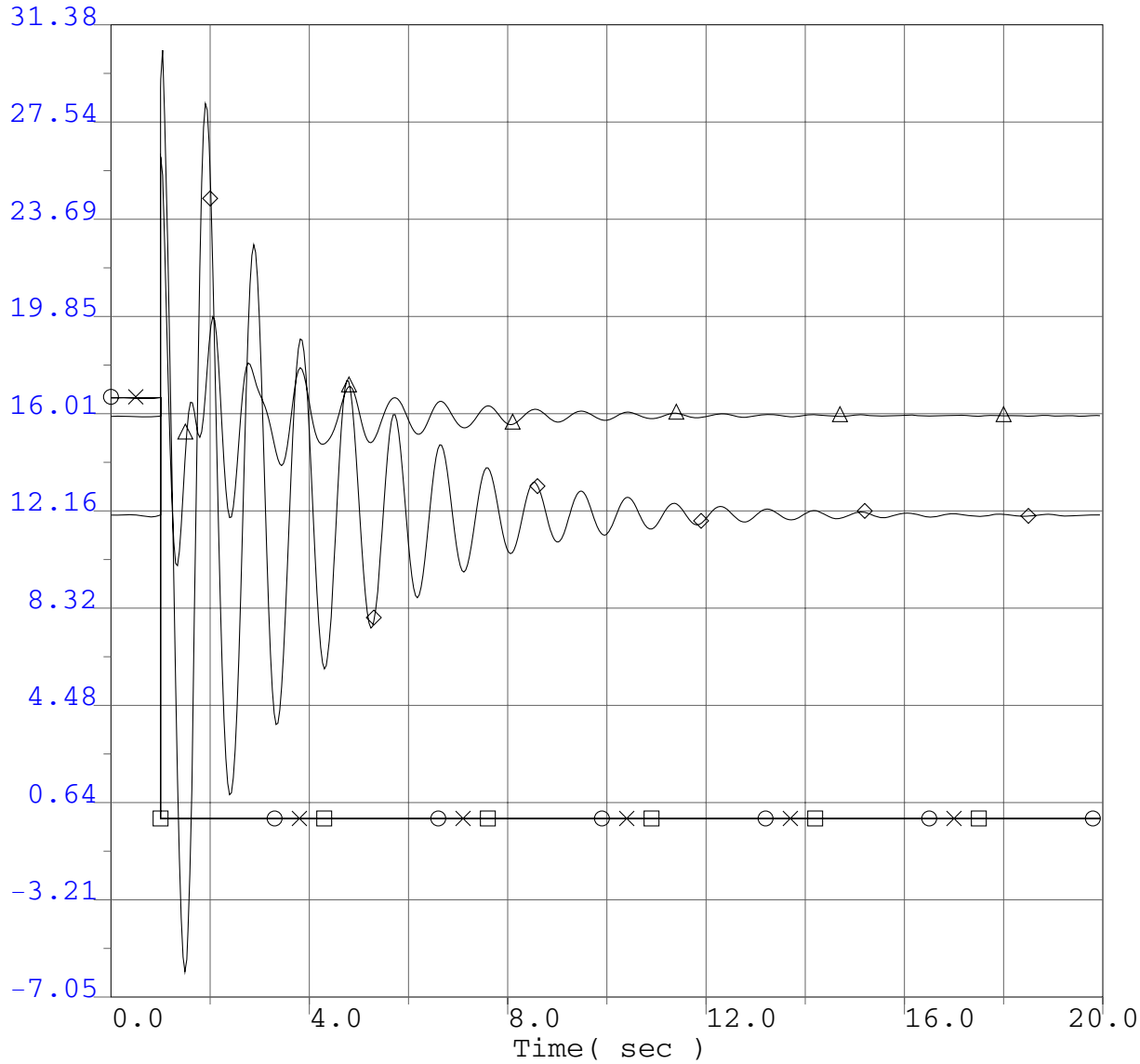

○	-7.05	pg	31180	P0411G1	13.8	"1" 1	31.38
×	-7.05	pg	31181	P0411G2	13.8	"5" 1	31.38
□	-7.05	pg	31182	P0411G3	13.8	"8" 1	31.38
△	-7.05	pg	31150	FAIRHAVN	13.8	"1" 1	31.38
◇	-7.05	pg	31158	LP SAMOA	12.5	"1" 1	31.38

P0411 Project System Impact Study
2008 Summer Peak Base Case
P0411 @ 166.4MW
P0411 Load Rejection
No Fault

P0411 Project System Impact Study

Project Generator Terminal Reactive Power

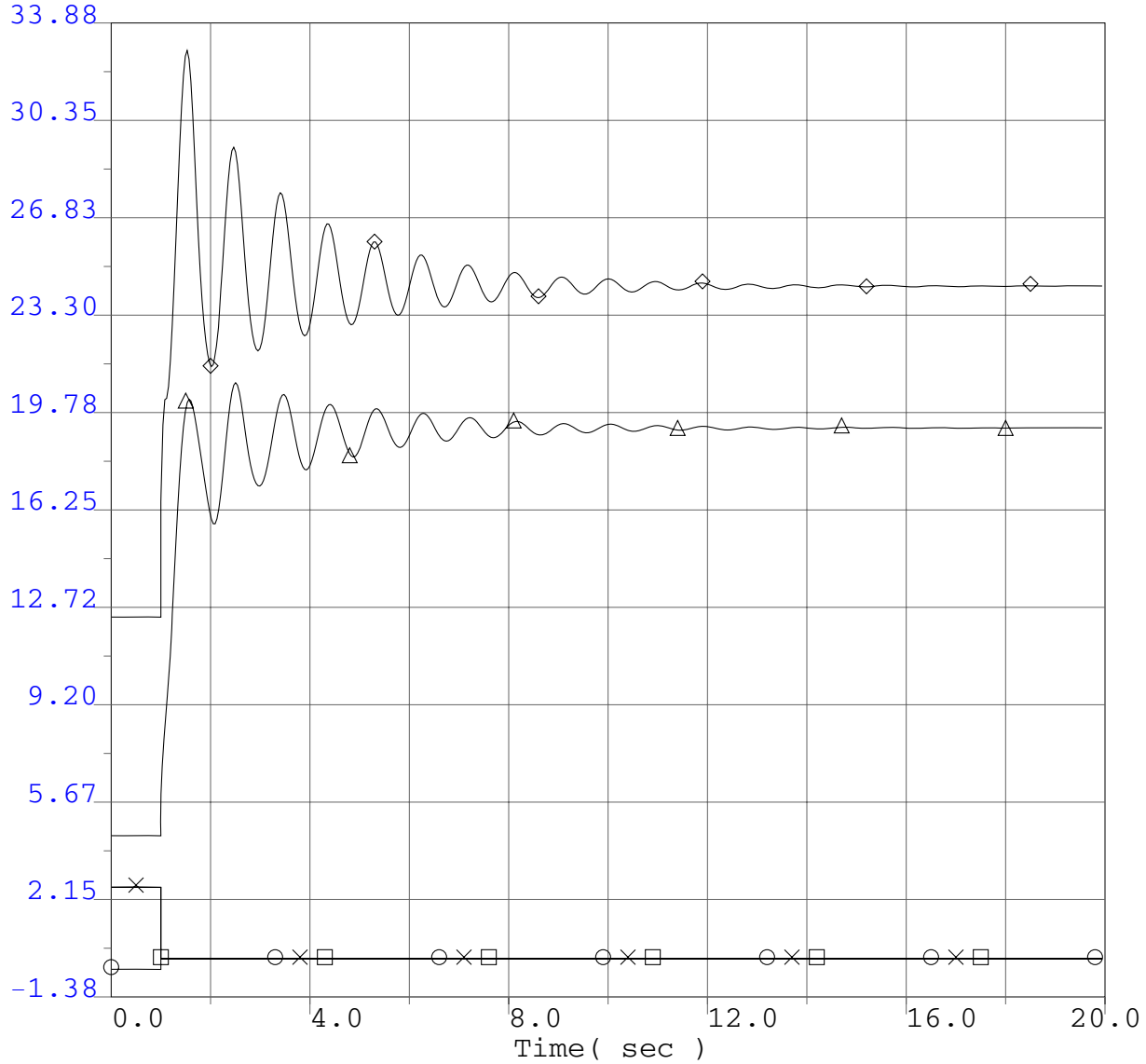

○	-1.38	qg	31180	P0411G1	13.8	"1"	1	33.88
×	-1.38	qg	31181	P0411G2	13.8	"5"	1	33.88
□	-1.38	qg	31182	P0411G3	13.8	"8"	1	33.88
△	-1.38	qg	31150	FAIRHAVN	13.8	"1"	1	33.88
◇	-1.38	qg	31158	LP SAMOA	12.5	"1"	1	33.88

P0411 Project System Impact Study
2008 Summer Peak Base Case
P0411 @ 166.4MW
P0411 Load Rejection
No Fault

P0411 Project System Impact Study

Selected WECC Bus Voltage Plots

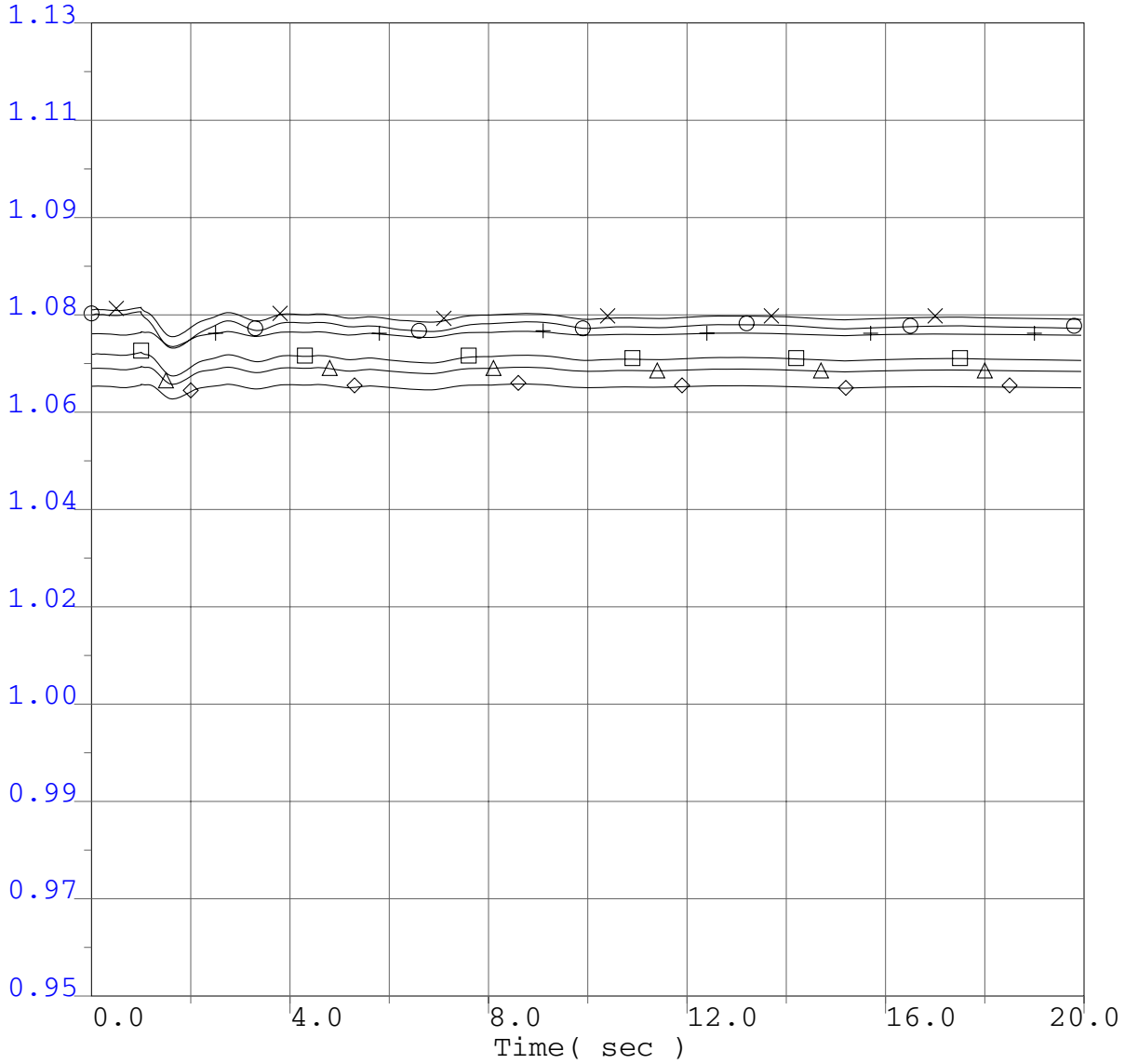

○	0.95	vbus	40687	MALIN	500.0	"*" 1	1.13
×	0.95	vbus	30005	ROUND MT	500.0	"*" 1	1.13
□	0.95	vbus	30015	TABLE MT	500.0	"*" 1	1.13
△	0.95	vbus	30030	VACA-DIX	500.0	"*" 1	1.13
◇	0.95	vbus	30040	TESLA	500.0	"*" 1	1.13
+	0.95	vbus	30035	TRACY	500.0	"*" 1	1.13

P0411 Project System Impact Study
2008 Summer Peak Base Case
P0411 @ 166.4MW
P0411 Load Rejection
No Fault

P0411 Project System Impact Study

Selected WECC Bus Voltage Plots

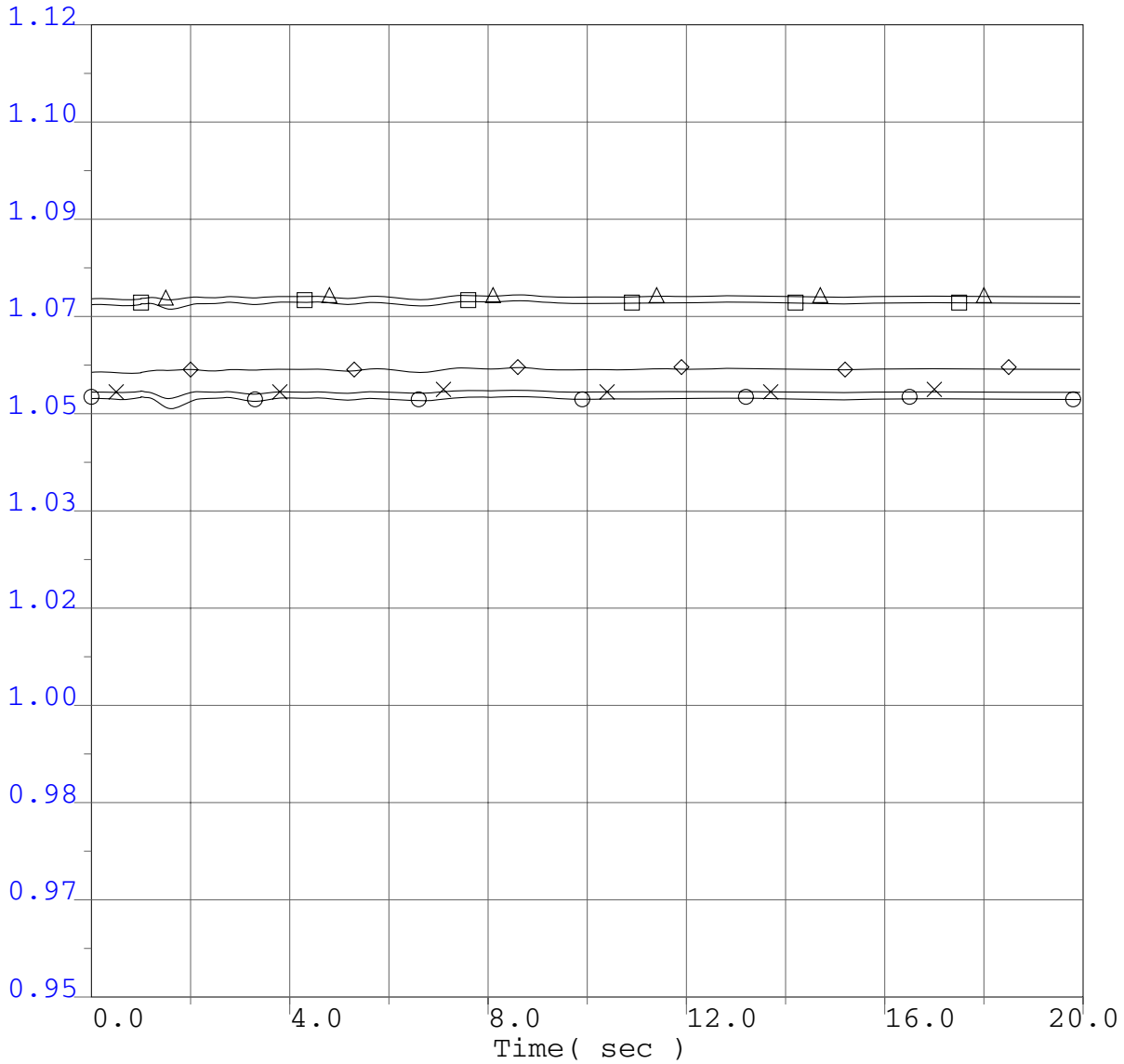

○	0.95	vbus	30042	METCALF	500.0	"*"	1	1.12
×	0.95	vbus	30045	MOSSLAND	500.0	"*"	1	1.12
□	0.95	vbus	30050	LOSBANOS	500.0	"*"	1	1.12
△	0.95	vbus	30055	GATES	500.0	"*"	1	1.12
◇	0.95	vbus	30060	MIDWAY	500.0	"*"	1	1.12

P0411 Project System Impact Study
2008 Summer Peak Base Case
P0411 @ 166.4MW
P0411 Load Rejection
No Fault

P0411 Project System Impact Study

Selected WECC Bus Voltage Plots

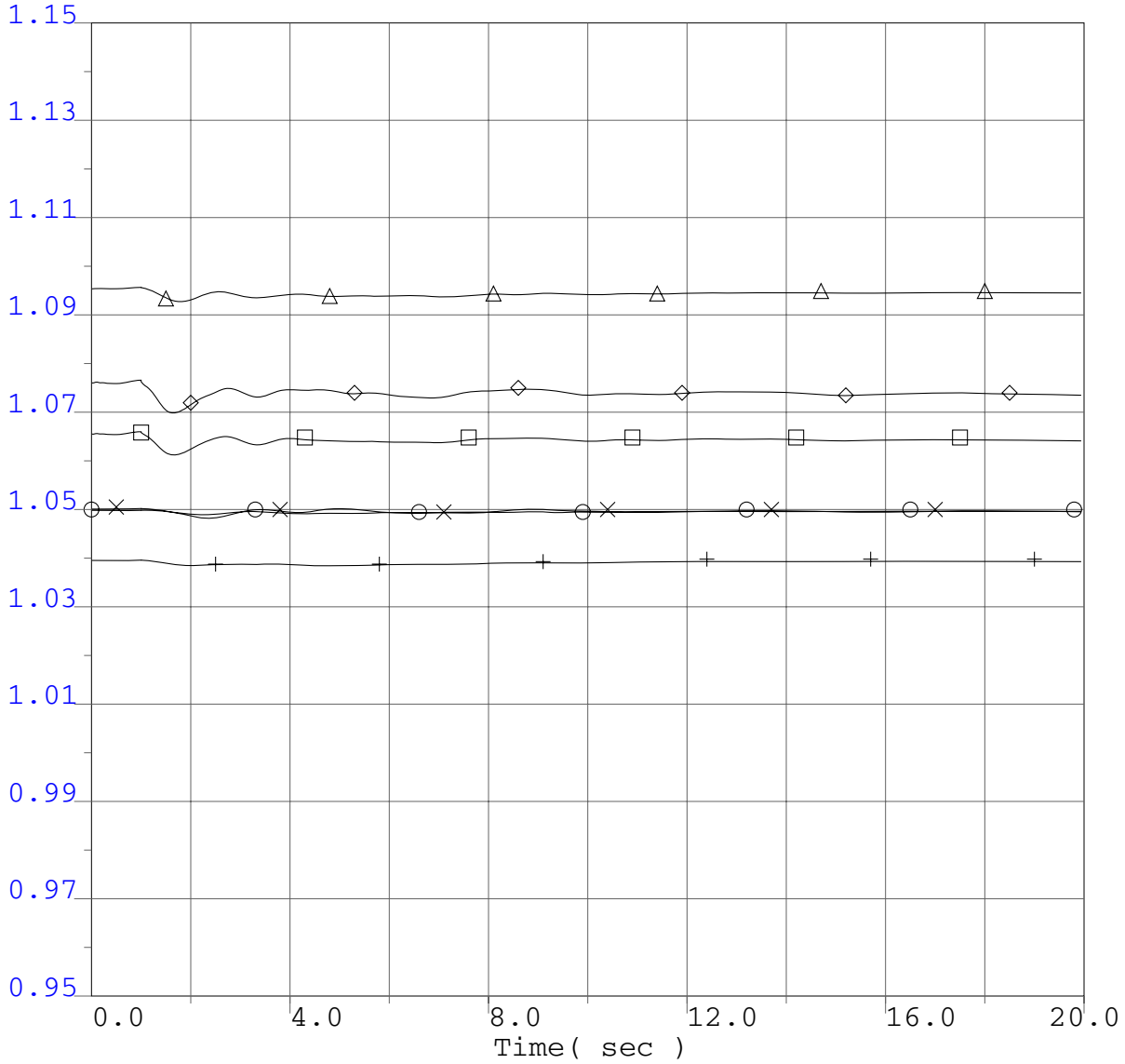

○ 0.95	vbus	14001	FOURCORN	500.0	"*"	1	1.15
× 0.95	vbus	50703	NIC500	500.0	"*"	1	1.15
□ 0.95	vbus	60240	MIDPOINT	500.0	"*"	1	1.15
△ 0.95	vbus	62012	TOWN2	500.0	"*"	1	1.15
◇ 0.95	vbus	40687	MALIN	500.0	"*"	1	1.15
+ 0.95	vbus	66340	SIGURD	345.0	"*"	1	1.15

P0411 Project System Impact Study
2008 Summer Peak Base Case
P0411 @ 166.4MW
P0411 Load Rejection
No Fault

P0411 Project System Impact Study

Selected WECC Bus Voltage Plots

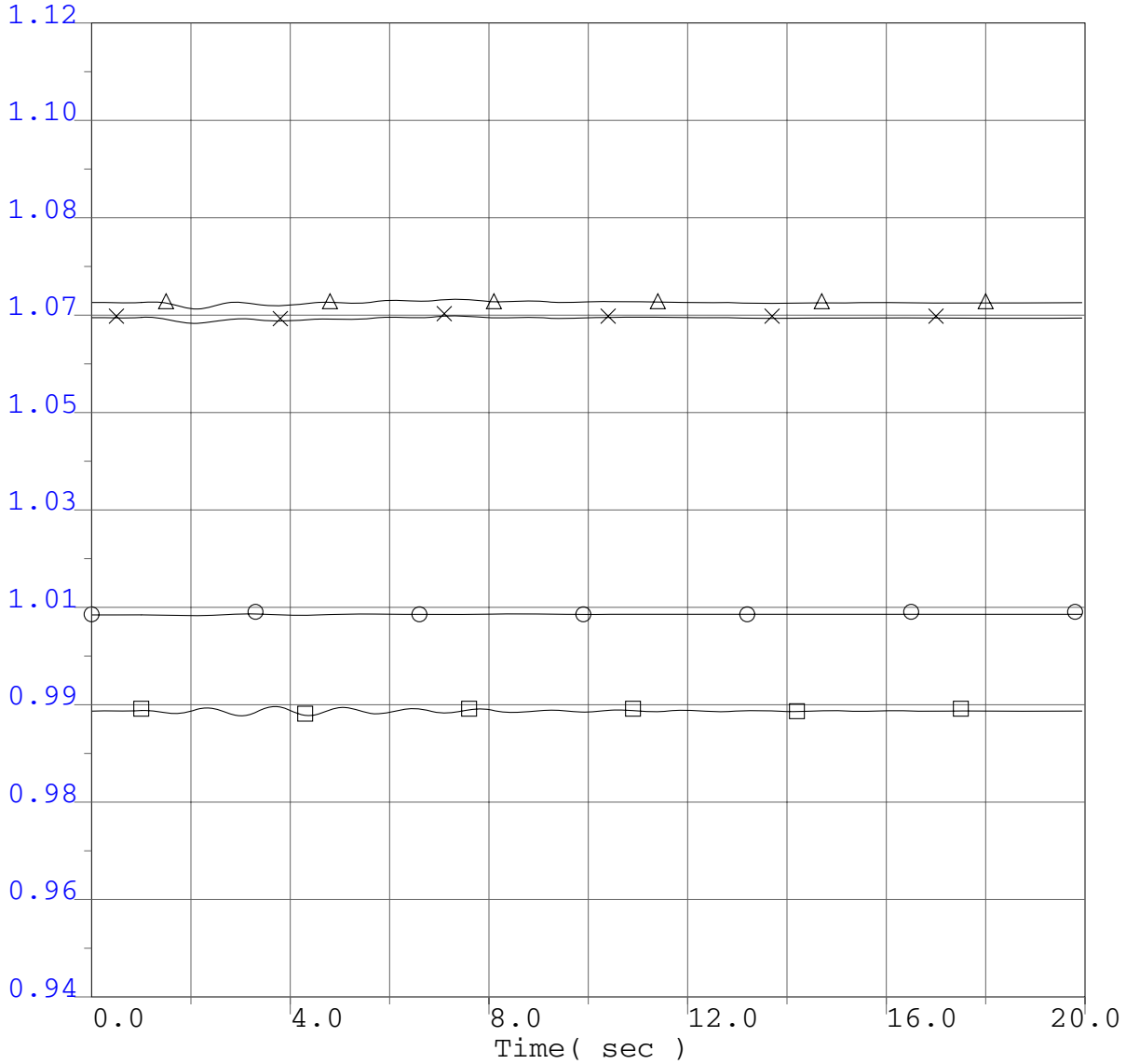

○ 0.94	vbus	54150	LANGDON2	500.0	"*"	1	1.12
× 0.94	vbus	14003	NAVAJO	500.0	"*"	1	1.12
□ 0.94	vbus	24153	VESTAL	230.0	"*"	1	1.12
△ 0.94	vbus	22360	IMPRLVLY	500.0	"*"	1	1.12

P0411 Project System Impact Study
2008 Summer Peak Base Case
P0411 @ 166.4MW
P0411 Load Rejection
No Fault

P0411 Project System Impact Study

Selected WECC Bus Frequency Plots

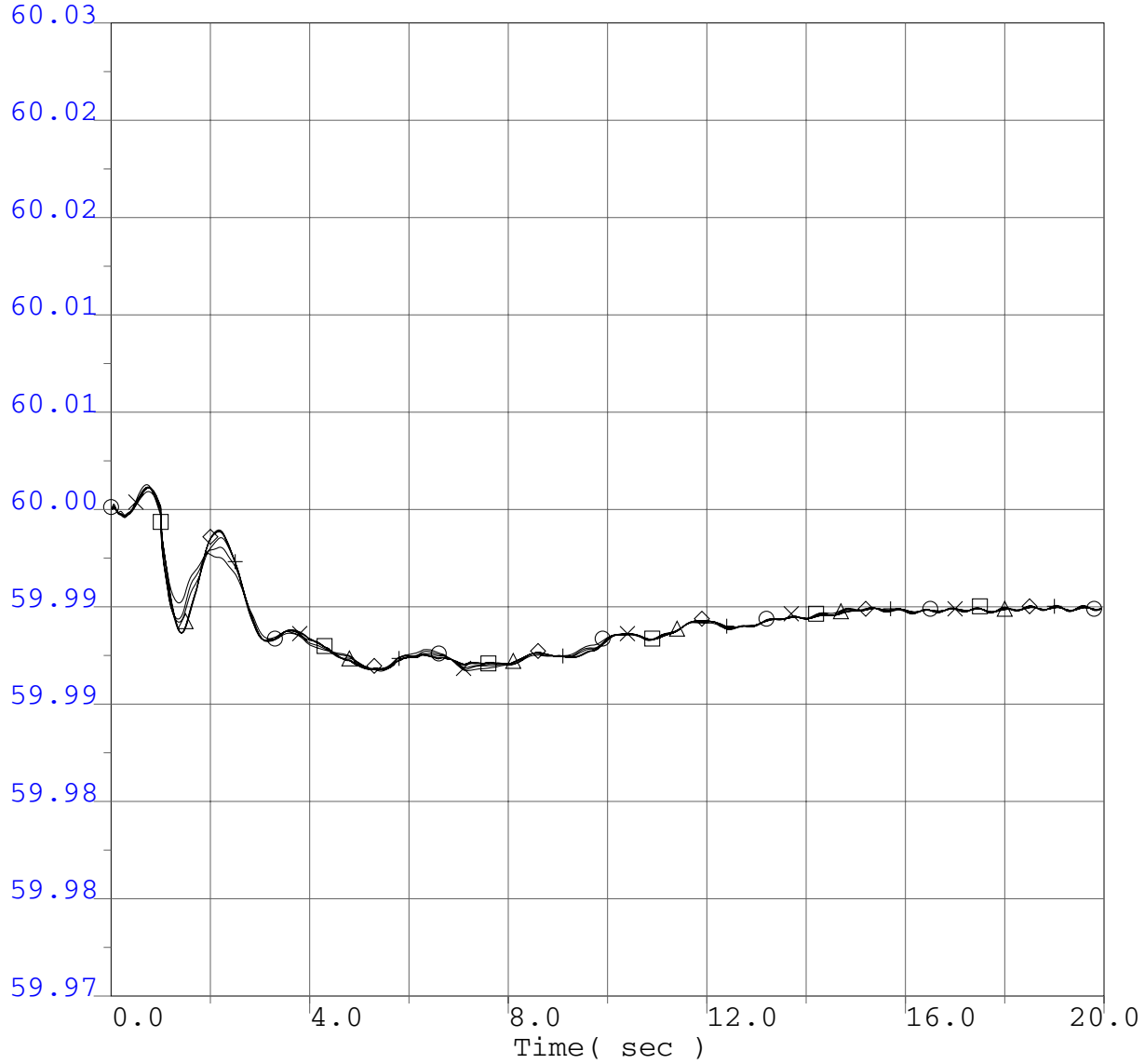

○ 59.97	fbus	40687	MALIN	500.0	"*"	1	60.03
× 59.97	fbus	30005	ROUND MT	500.0	"*"	1	60.03
□ 59.97	fbus	30015	TABLE MT	500.0	"*"	1	60.03
△ 59.97	fbus	30030	VACA-DIX	500.0	"*"	1	60.03
◇ 59.97	fbus	30040	TESLA	500.0	"*"	1	60.03
+ 59.97	fbus	30035	TRACY	500.0	"*"	1	60.03

P0411 Project System Impact Study
2008 Summer Peak Base Case
P0411 @ 166.4MW
P0411 Load Rejection
No Fault

P0411 Project System Impact Study

Selected WECC Bus Frequency Plots

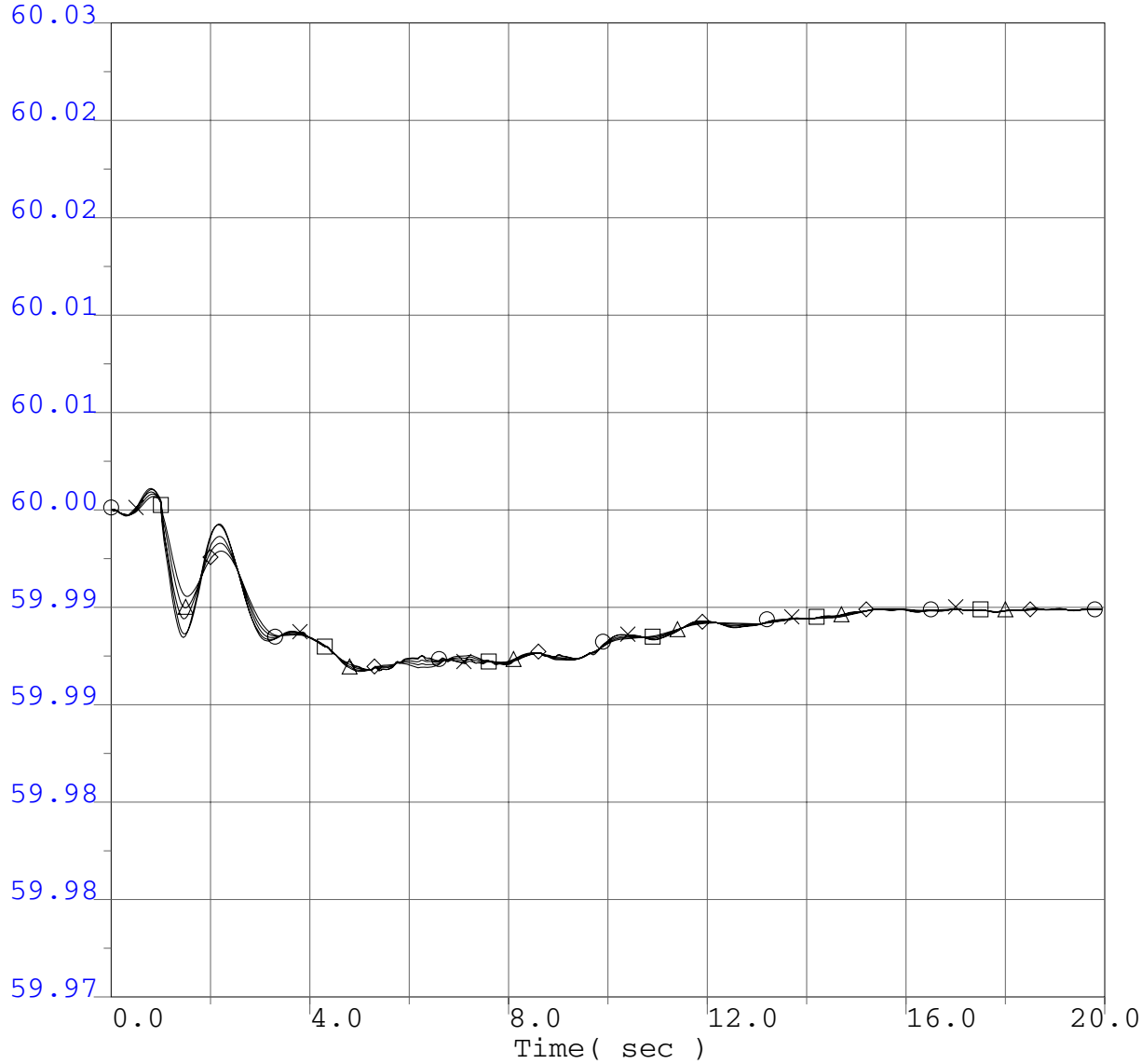

○ 59.97	fbus	30042	METCALF	500.0	"*"	1	60.03
× 59.97	fbus	30045	MOSSLAND	500.0	"*"	1	60.03
□ 59.97	fbus	30050	LOSBANOS	500.0	"*"	1	60.03
△ 59.97	fbus	30055	GATES	500.0	"*"	1	60.03
◇ 59.97	fbus	30060	MIDWAY	500.0	"*"	1	60.03

P0411 Project System Impact Study
2008 Summer Peak Base Case
P0411 @ 166.4MW
P0411 Load Rejection
No Fault

P0411 Project System Impact Study

Selected WECC Bus Frequency Plots

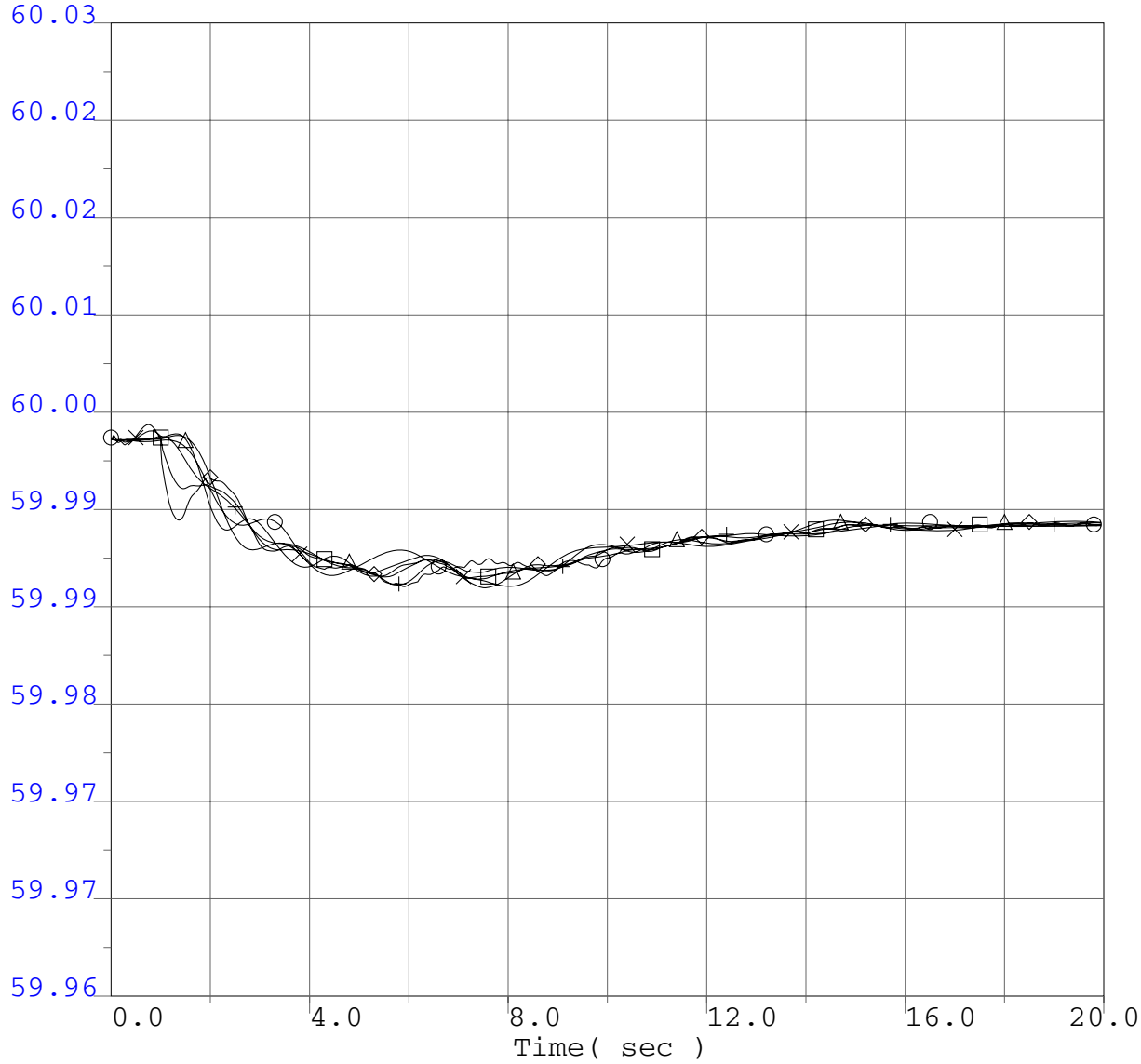

○ 59.96	fbus	14001	FOURCORN	500.0	"*"	1	60.03
× 59.96	fbus	50703	NIC500	500.0	"*"	1	60.03
□ 59.96	fbus	60240	MIDPOINT	500.0	"*"	1	60.03
△ 59.96	fbus	62012	TOWN2	500.0	"*"	1	60.03
◇ 59.96	fbus	40687	MALIN	500.0	"*"	1	60.03
+ 59.96	fbus	66340	SIGURD	345.0	"*"	1	60.03

P0411 Project System Impact Study
2008 Summer Peak Base Case
P0411 @ 166.4MW
P0411 Load Rejection
No Fault

P0411 Project System Impact Study

Selected WECC Bus Frequency Plots

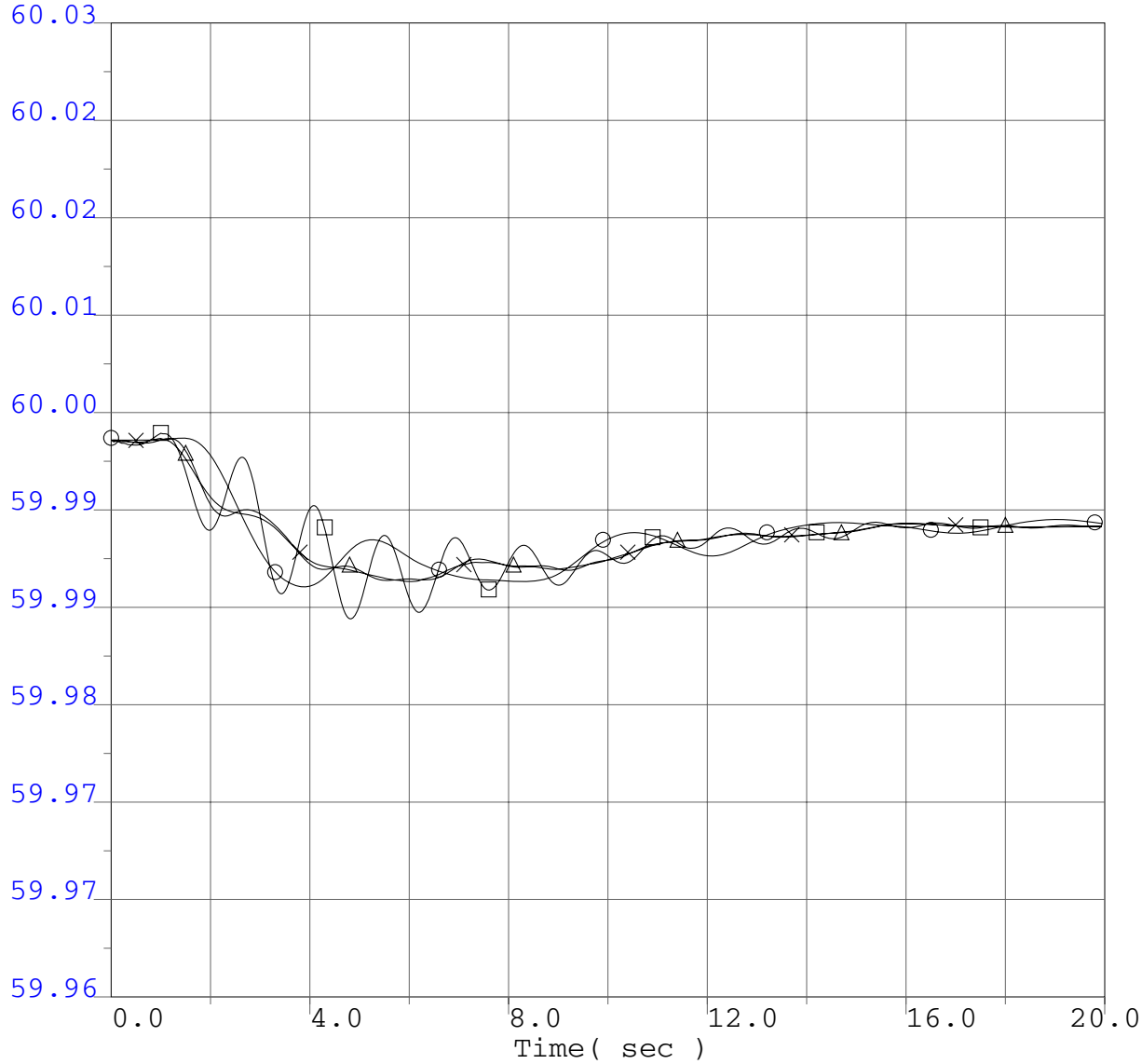

○ 59.96	fbus	54150	LANGDON2	500.0	"*"	1	60.03
× 59.96	fbus	14003	NAVAJO	500.0	"*"	1	60.03
□ 59.96	fbus	24153	VESTAL	230.0	"*"	1	60.03
△ 59.96	fbus	22360	IMPRLVLY	500.0	"*"	1	60.03

P0411 Project System Impact Study
2008 Summer Peak Base Case
P0411 @ 166.4MW
P0411 Load Rejection
No Fault

P0411 Project System Impact Study

WECC Generator Rotor Angle

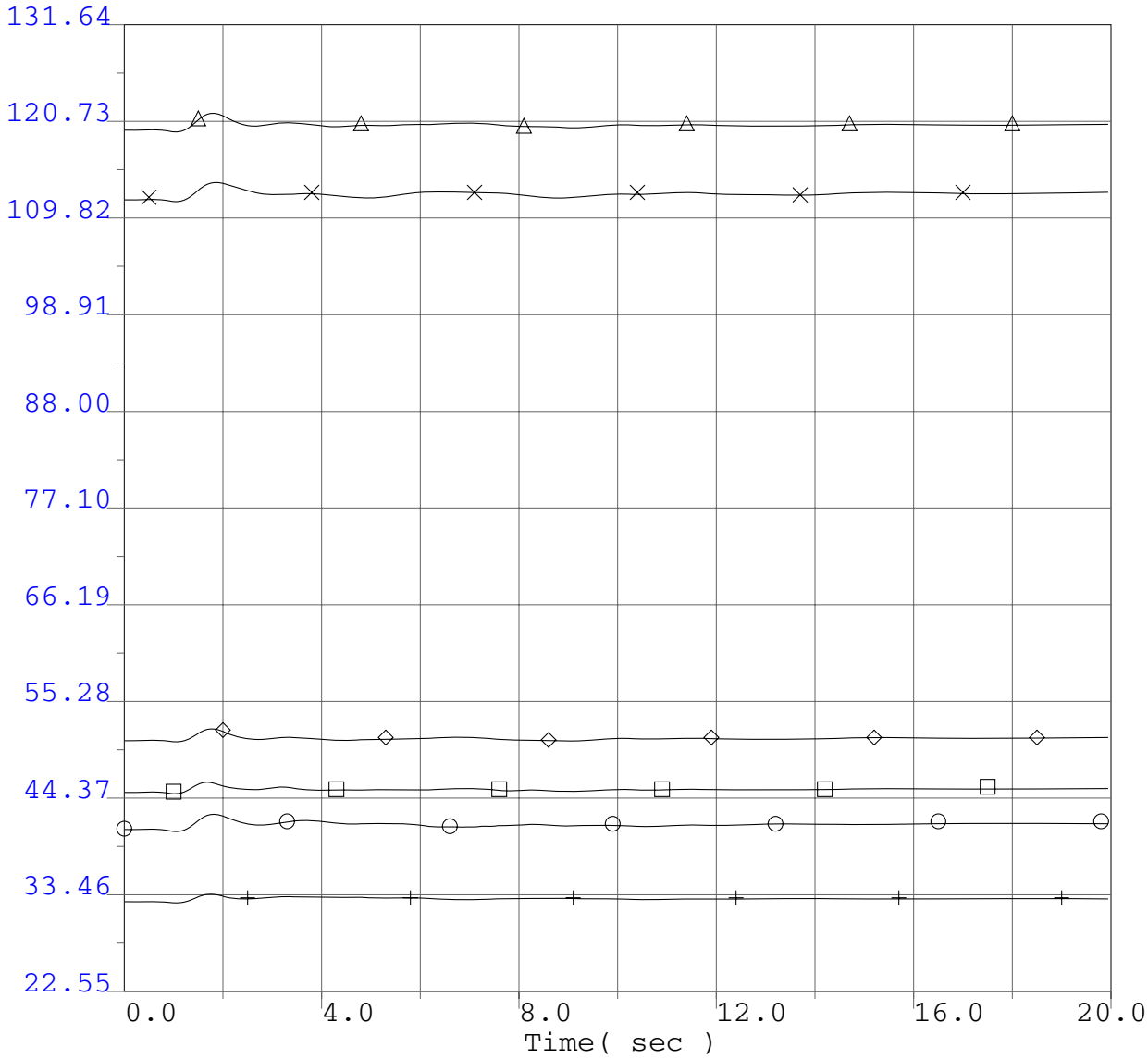

○	22.55	ang	14914	FCNGN4CC	22.0	"H" 1	131.64
×	22.55	ang	50500	GMS G6	13.8	"1" 1	131.64
□	22.55	ang	60100	BRWNL 5	13.8	"1" 1	131.64
△	22.55	ang	62048	COLSTP 3	26.0	"1" 1	131.64
◇	22.55	ang	41701	JONDAY01	13.8	"1" 1	131.64
+	22.55	ang	36411	DIABLO 1	25.0	"1" 1	131.64

P0411 Project System Impact Study
2008 Summer Peak Base Case
P0411 @ 166.4MW
P0411 Load Rejection
No Fault

P0411 Project System Impact Study

WECC Generator Rotor Angle

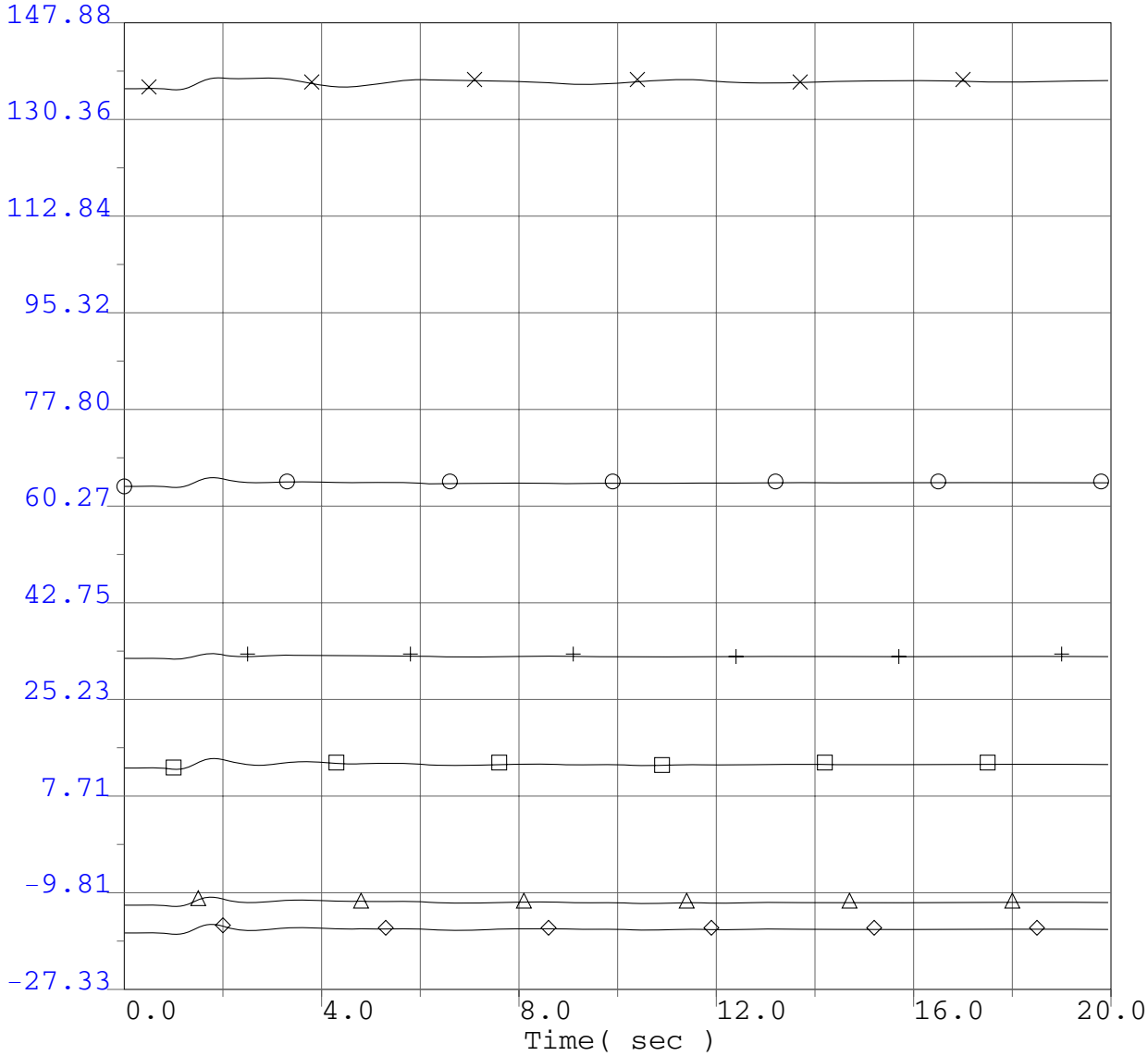

○	-27.33	ang	65490	EHUNTR 1	24.0	"1" 1	147.88
×	-27.33	ang	54280	SUND#2GN	18.0	"2" 1	147.88
□	-27.33	ang	79151	GLENC3-4	13.8	"3" 1	147.88
△	-27.33	ang	24130	S.ONOFR3	22.0	"3" 1	147.88
◇	-27.33	ang	22244	ENCINA 5	24.0	"1" 1	147.88
+	-27.33	ang	36411	DIABLO 1	25.0	"1" 1	147.88

P0411 Project System Impact Study
2008 Summer Peak Base Case
P0411 @ 166.4MW
P0411 Load Rejection
No Fault

P0411 Project System Impact Study

Selected PG&E Transmission Line Flows (MW)

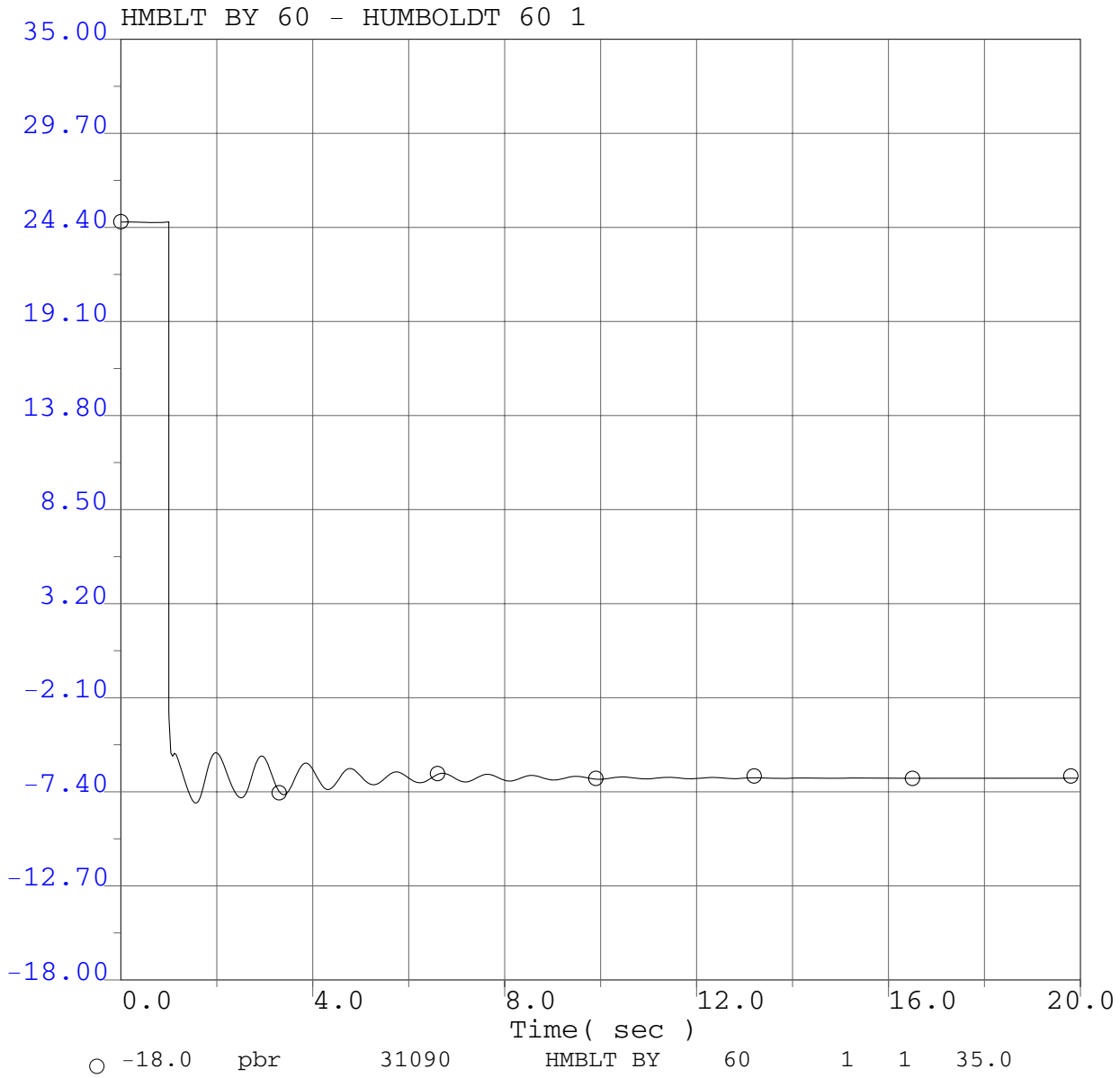

P0411 Project System Impact Study
2008 Summer Peak Base Case
P0411 @ 166.4MW
P0411 Load Rejection
No Fault

P0411 Project System Impact Study

Selected PG&E Transmission Line Flows (MW)

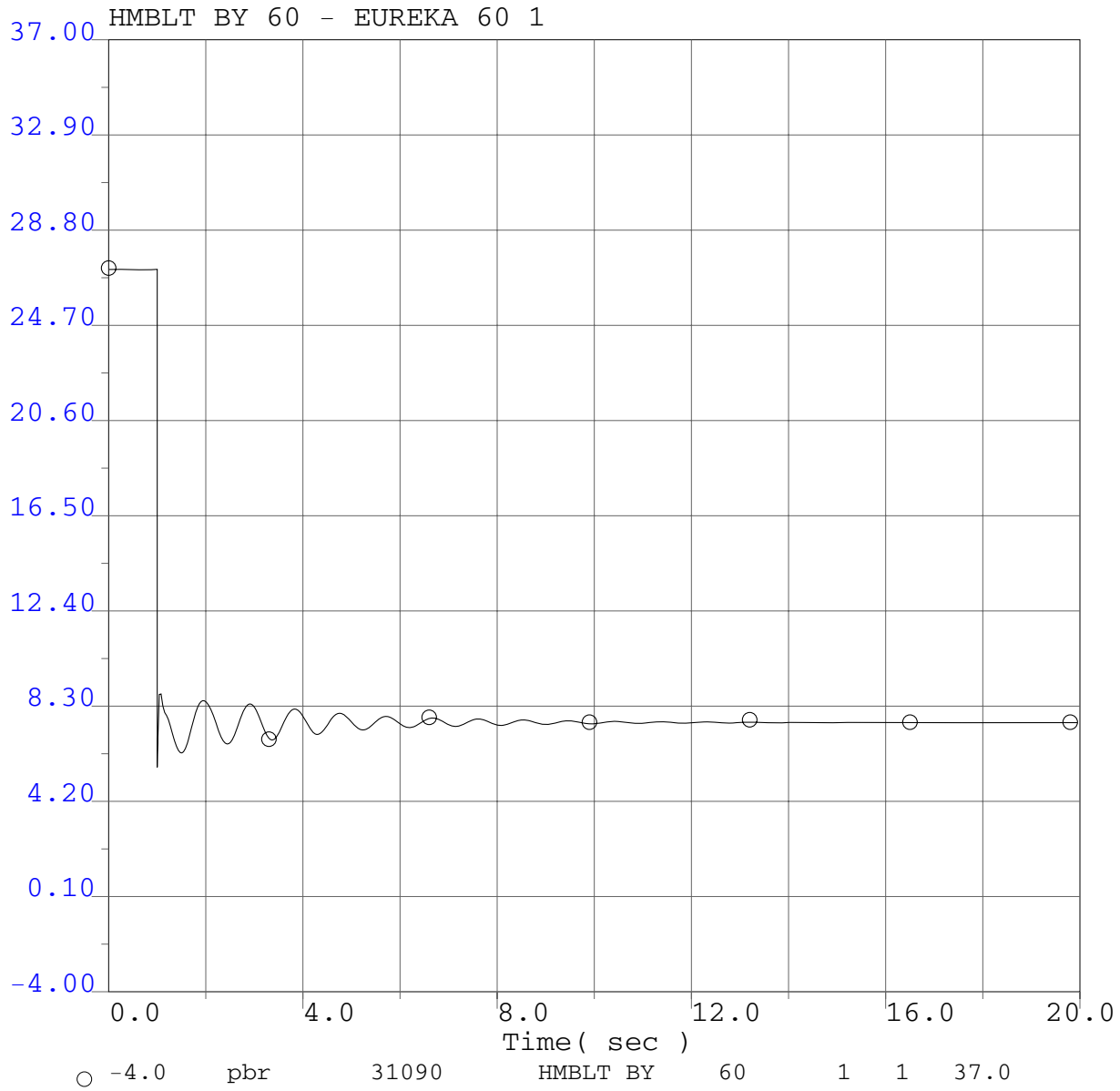

P0411 Project System Impact Study
2008 Summer Peak Base Case
P0411 @ 166.4MW
P0411 Load Rejection
No Fault

P0411 Project System Impact Study

Selected PG&E Transmission Line Flows (MW)

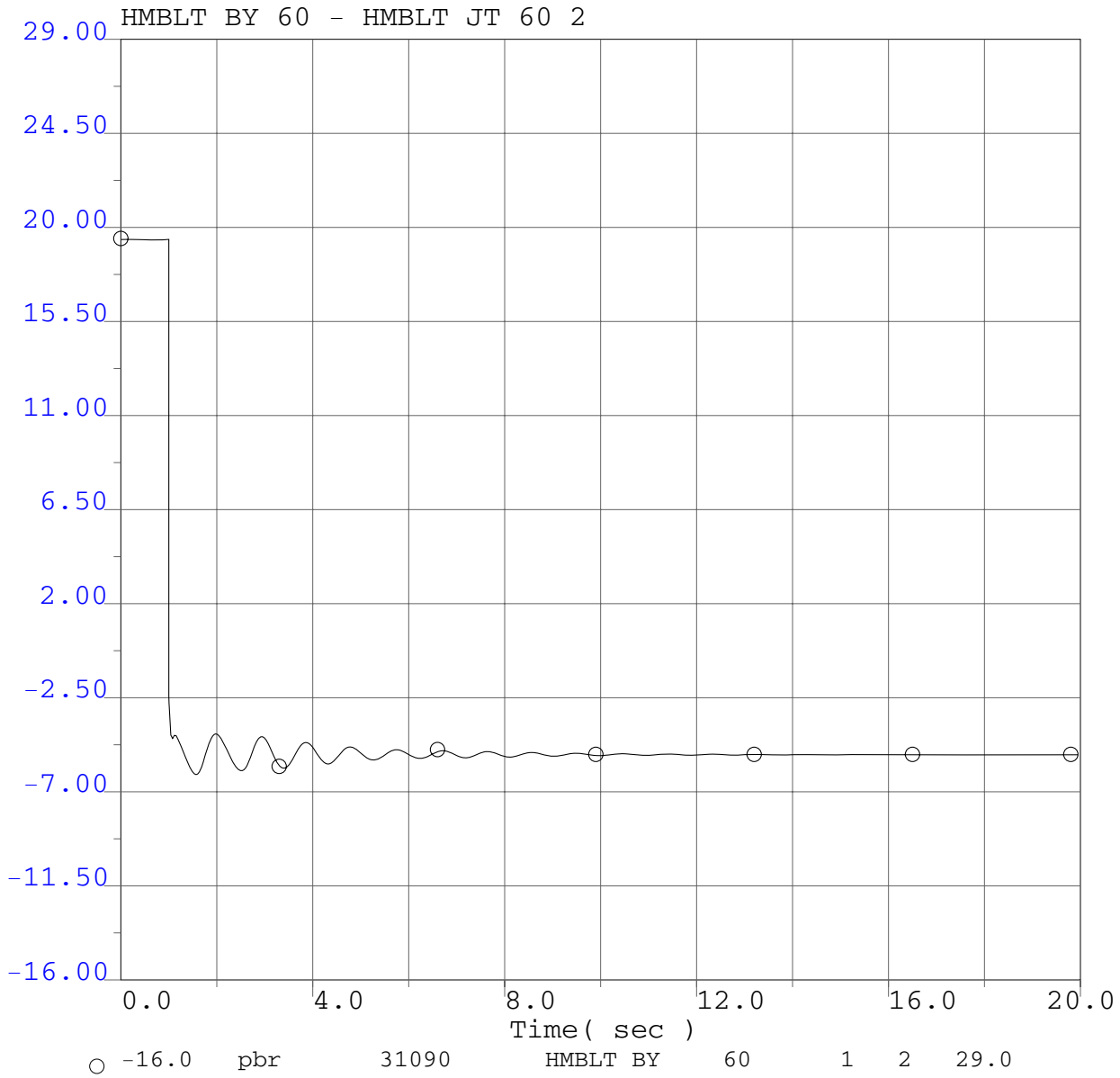

P0411 Project System Impact Study
2008 Summer Peak Base Case
P0411 @ 166.4MW
P0411 Load Rejection
No Fault

P0411 Project System Impact Study

Selected PG&E Transmission Line Flows (MW)

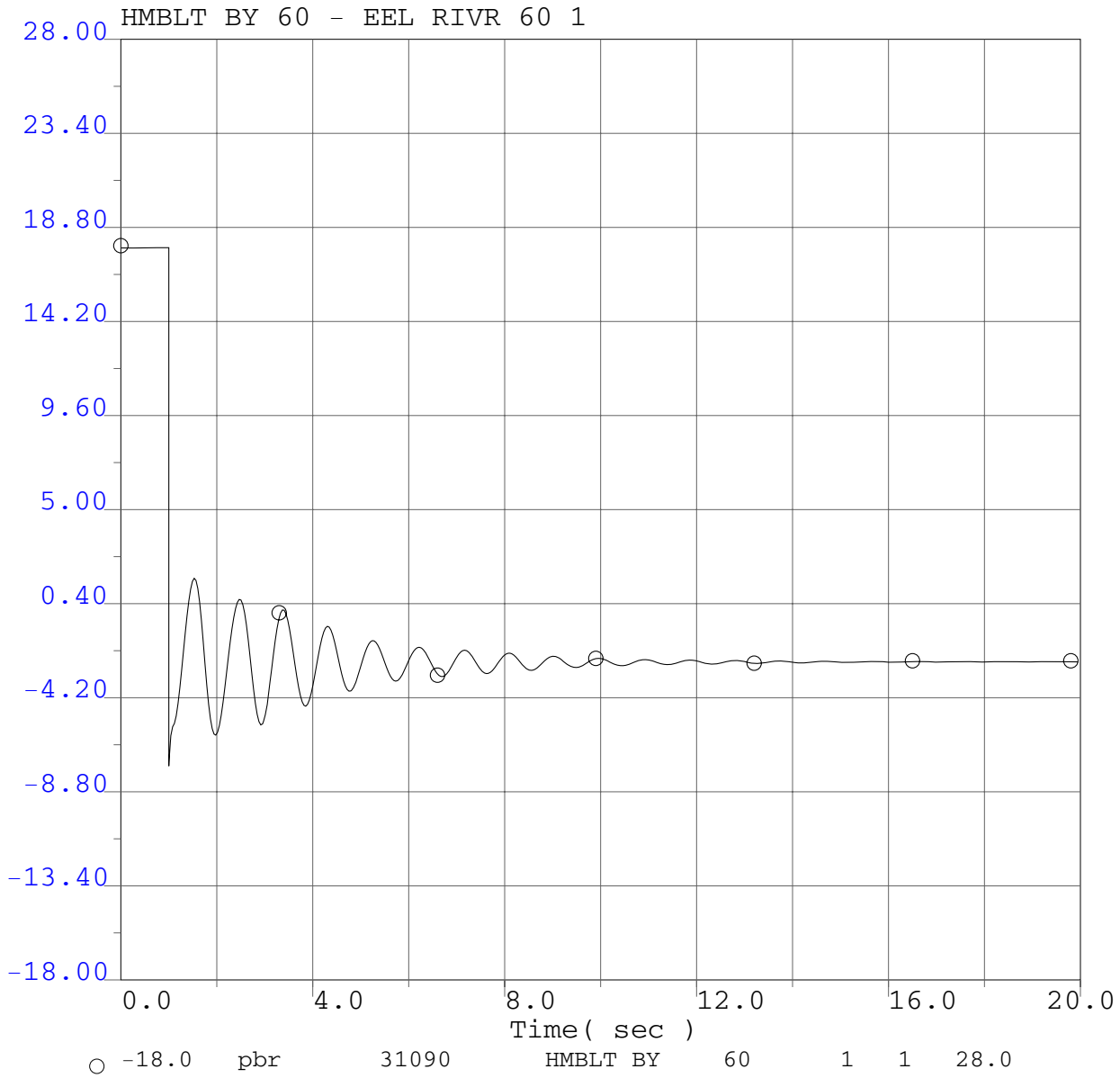

P0411 Project System Impact Study
2008 Summer Peak Base Case
P0411 @ 166.4MW
P0411 Load Rejection
No Fault

P0411 Project System Impact Study

Selected PG&E Transmission Line Flows (MW)

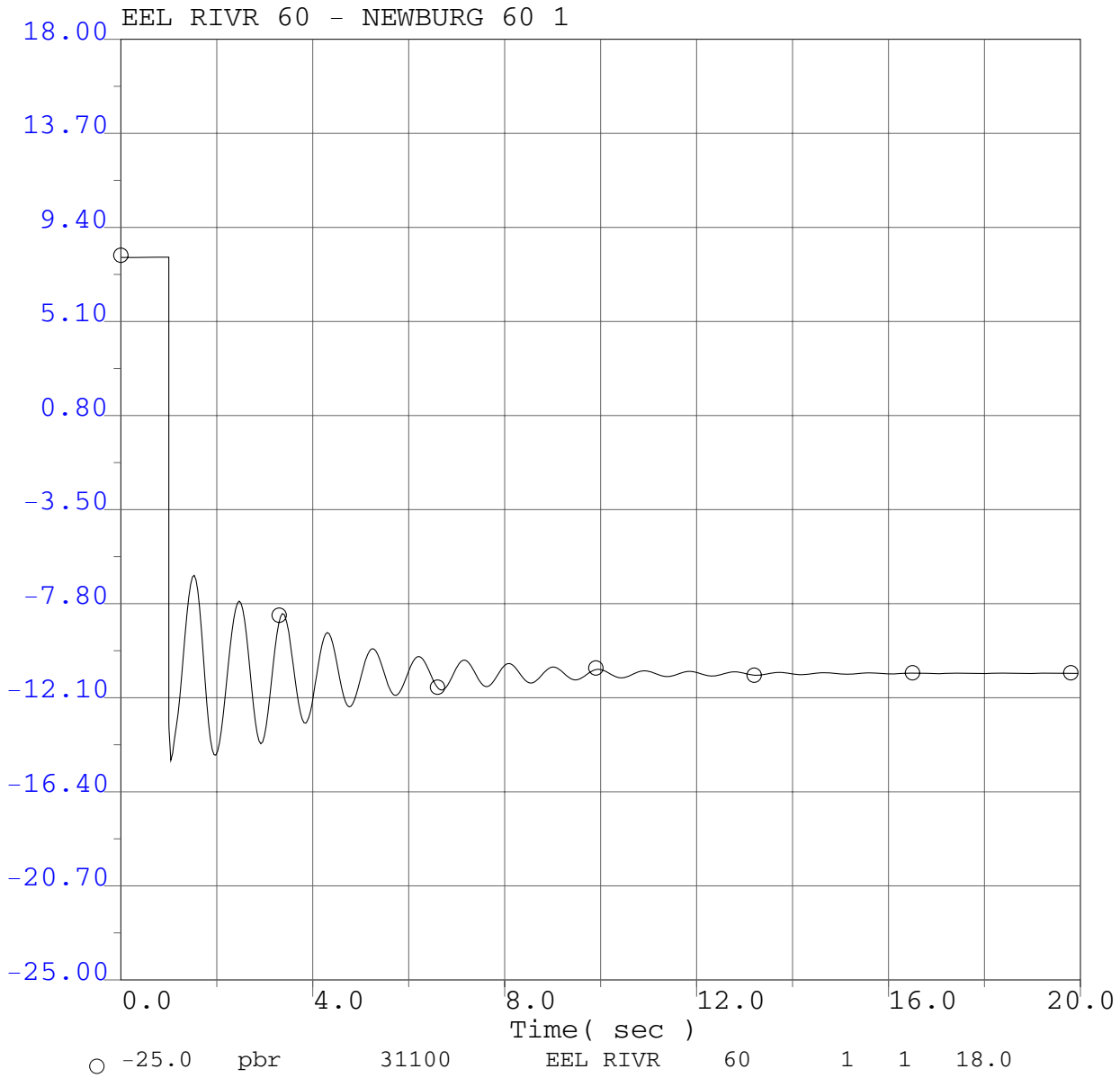

P0411 Project System Impact Study
2008 Summer Peak Base Case
P0411 @ 166.4MW
P0411 Load Rejection
No Fault

P0411 Project System Impact Study

Selected PG&E Transmission Line Flows (MW)

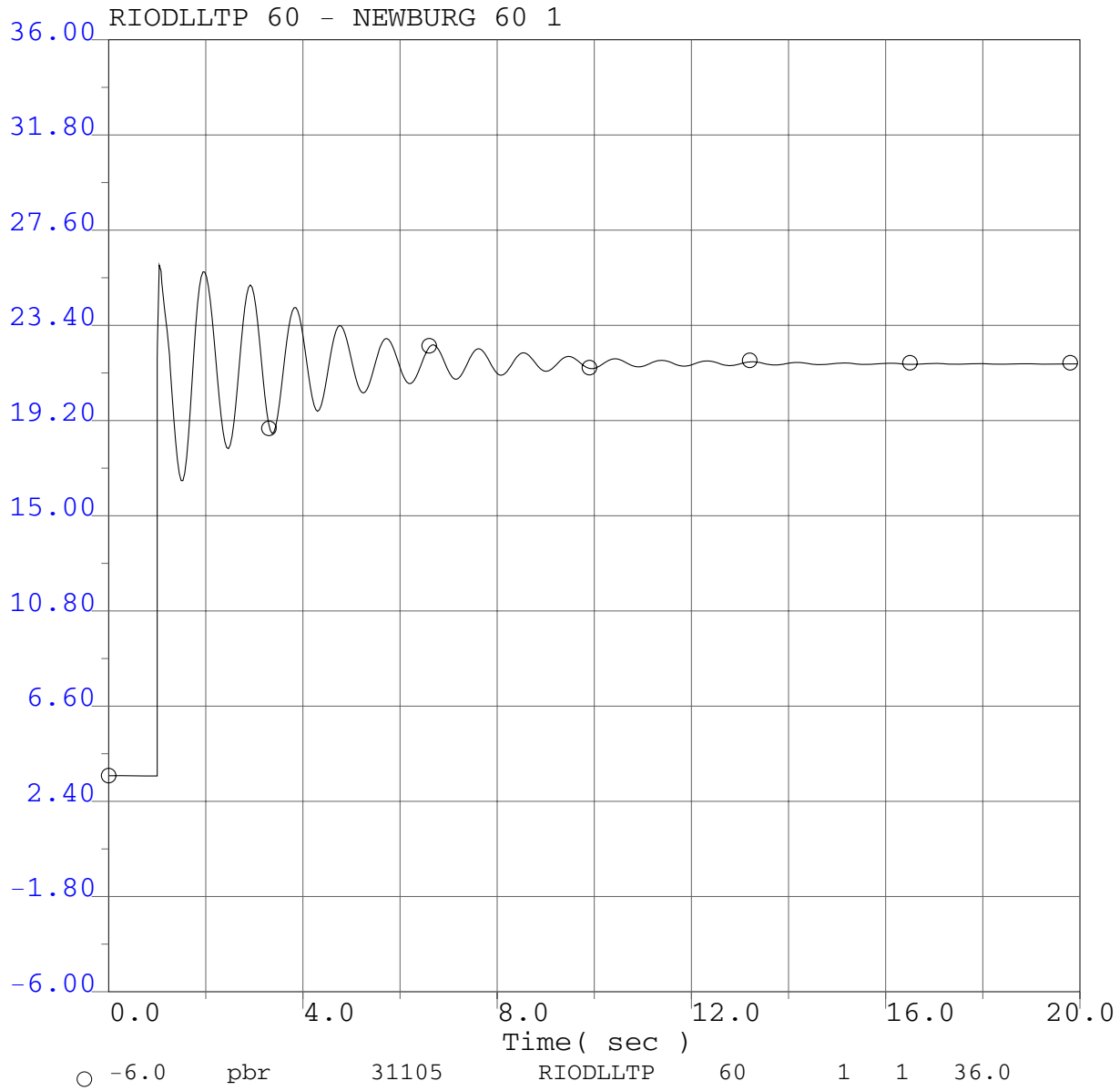

P0411 Project System Impact Study
2008 Summer Peak Base Case
P0411 @ 166.4MW
P0411 Load Rejection
No Fault

P0411 Project System Impact Study

Selected PG&E Transmission Line Flows (MW)

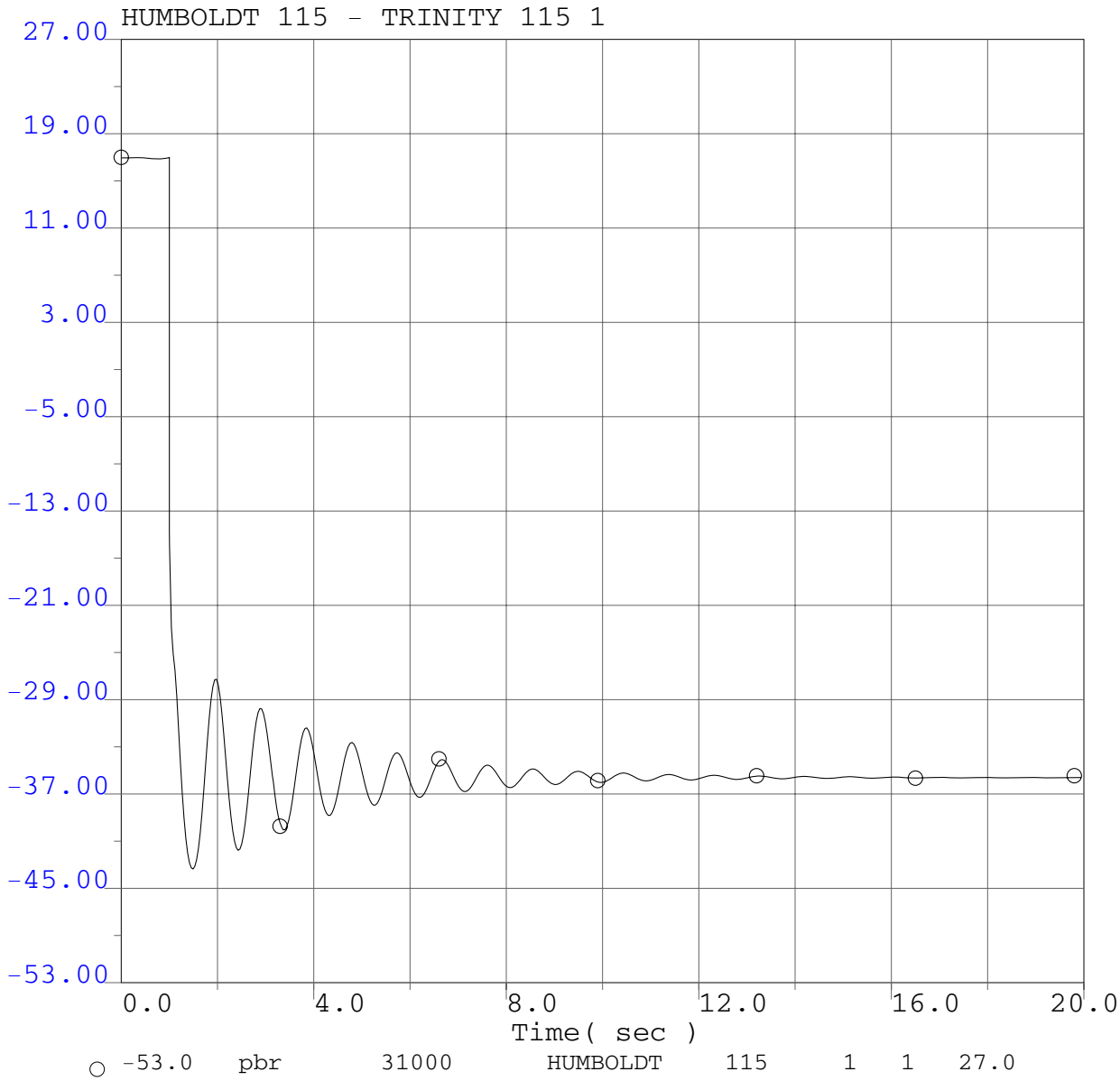

P0411 Project System Impact Study
2008 Summer Peak Base Case
P0411 @ 166.4MW
P0411 Load Rejection
No Fault

P0411 Project System Impact Study

Selected PG&E Transmission Line Flows (MW)

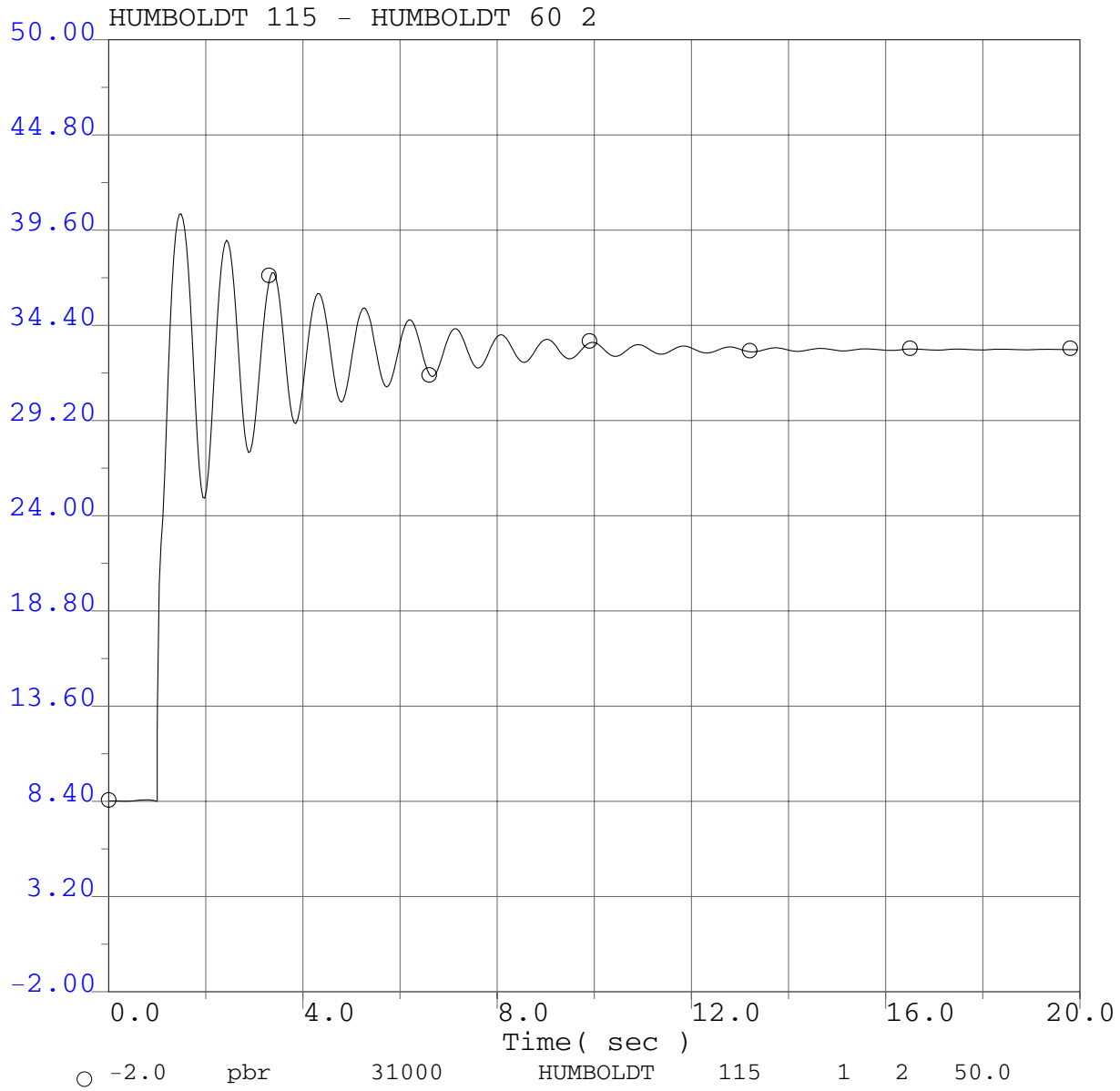

P0411 Project System Impact Study
2008 Summer Peak Base Case
P0411 @ 166.4MW
P0411 Load Rejection
No Fault

P0411 Project System Impact Study

Selected PG&E Transmission Line Flows (MW)

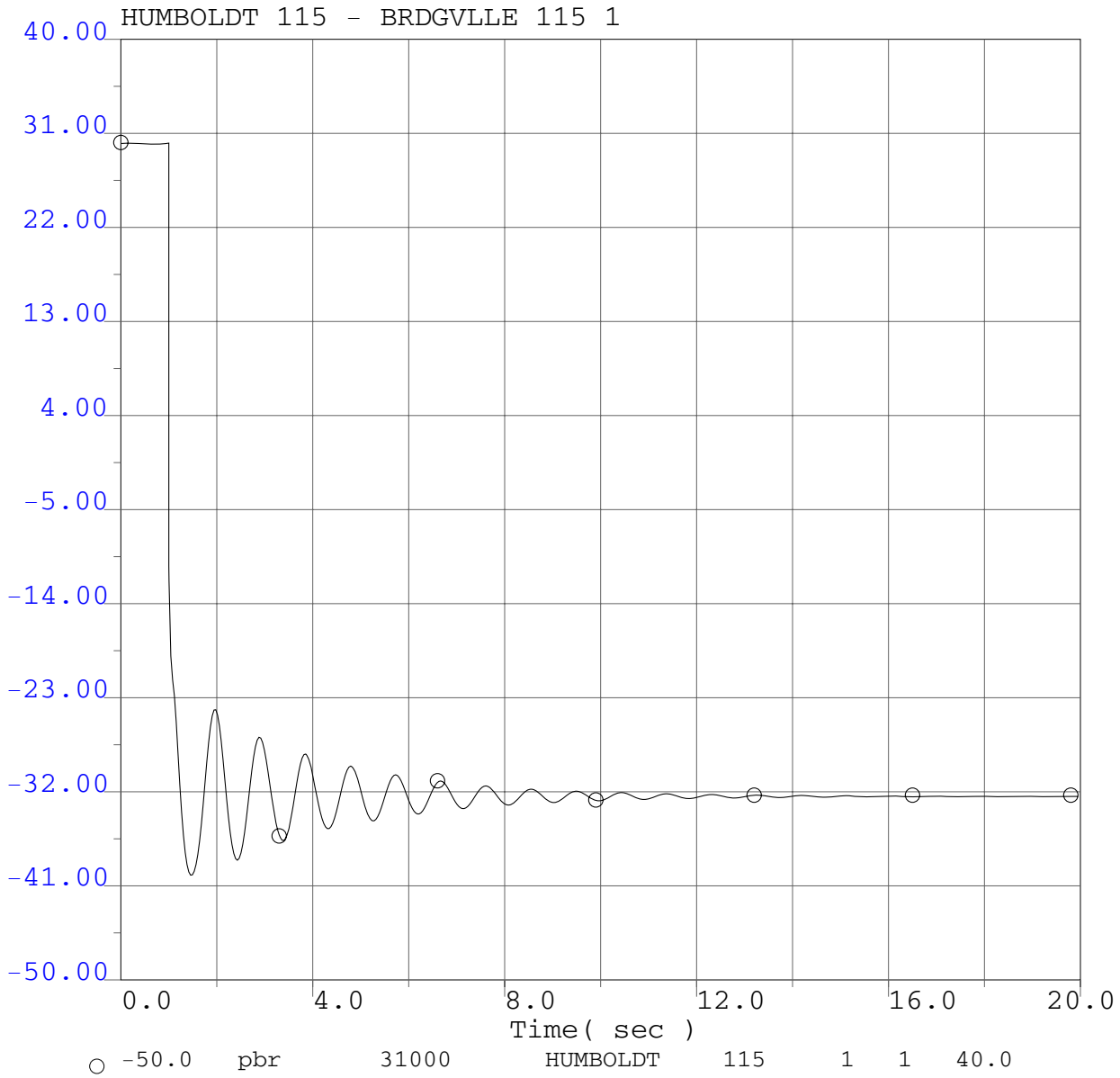

P0411 Project System Impact Study
2008 Summer Peak Base Case
P0411 @ 166.4MW
P0411 Load Rejection
No Fault

P0411 Project System Impact Study

Selected PG&E Transmission Line Flows (MW)

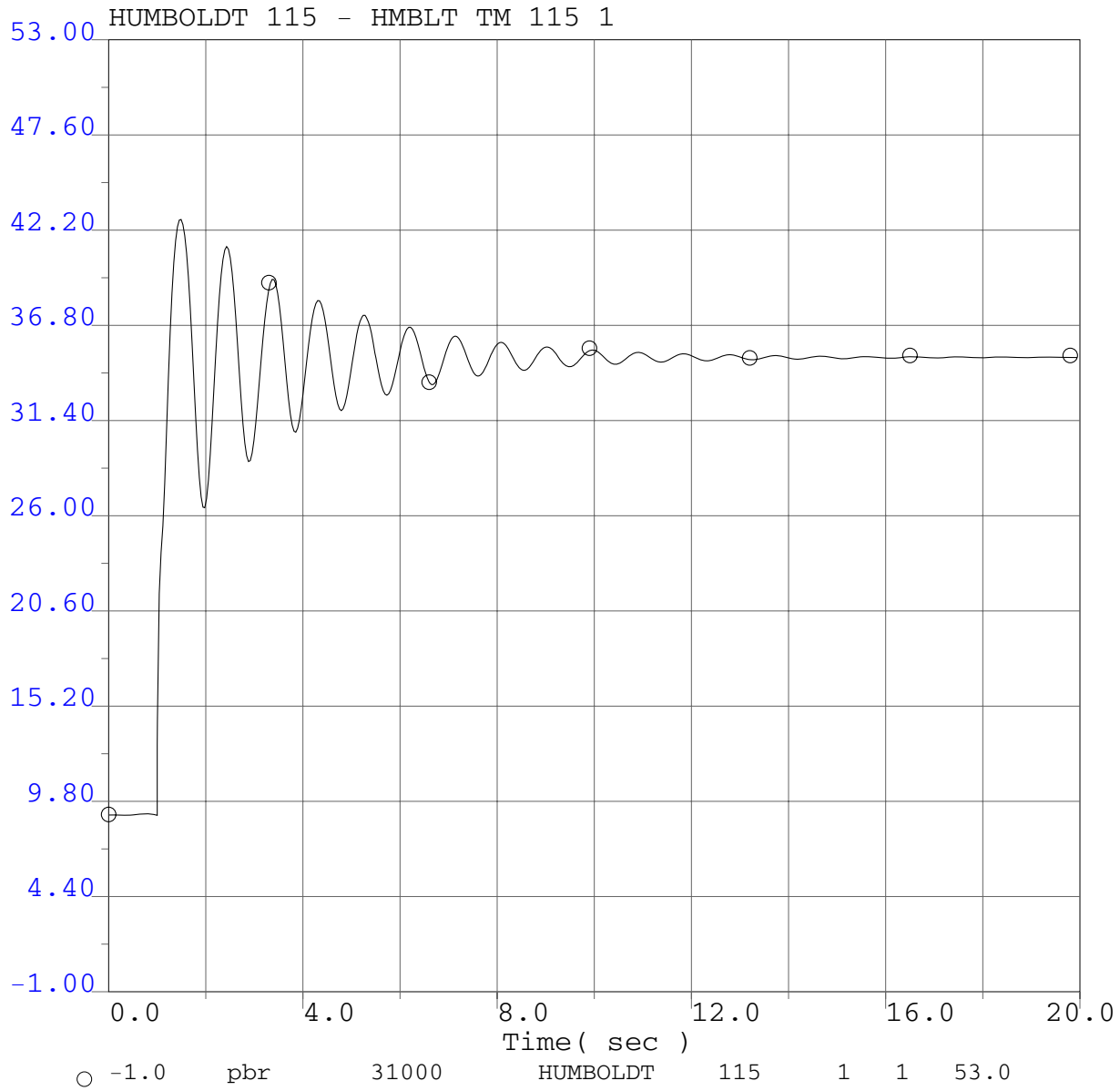

P0411 Project System Impact Study
2008 Summer Peak Base Case
P0411 @ 166.4MW
P0411 Load Rejection
No Fault

P0411 Project System Impact Study

Selected PG&E Bus Voltage Plots Adjacent to Fault

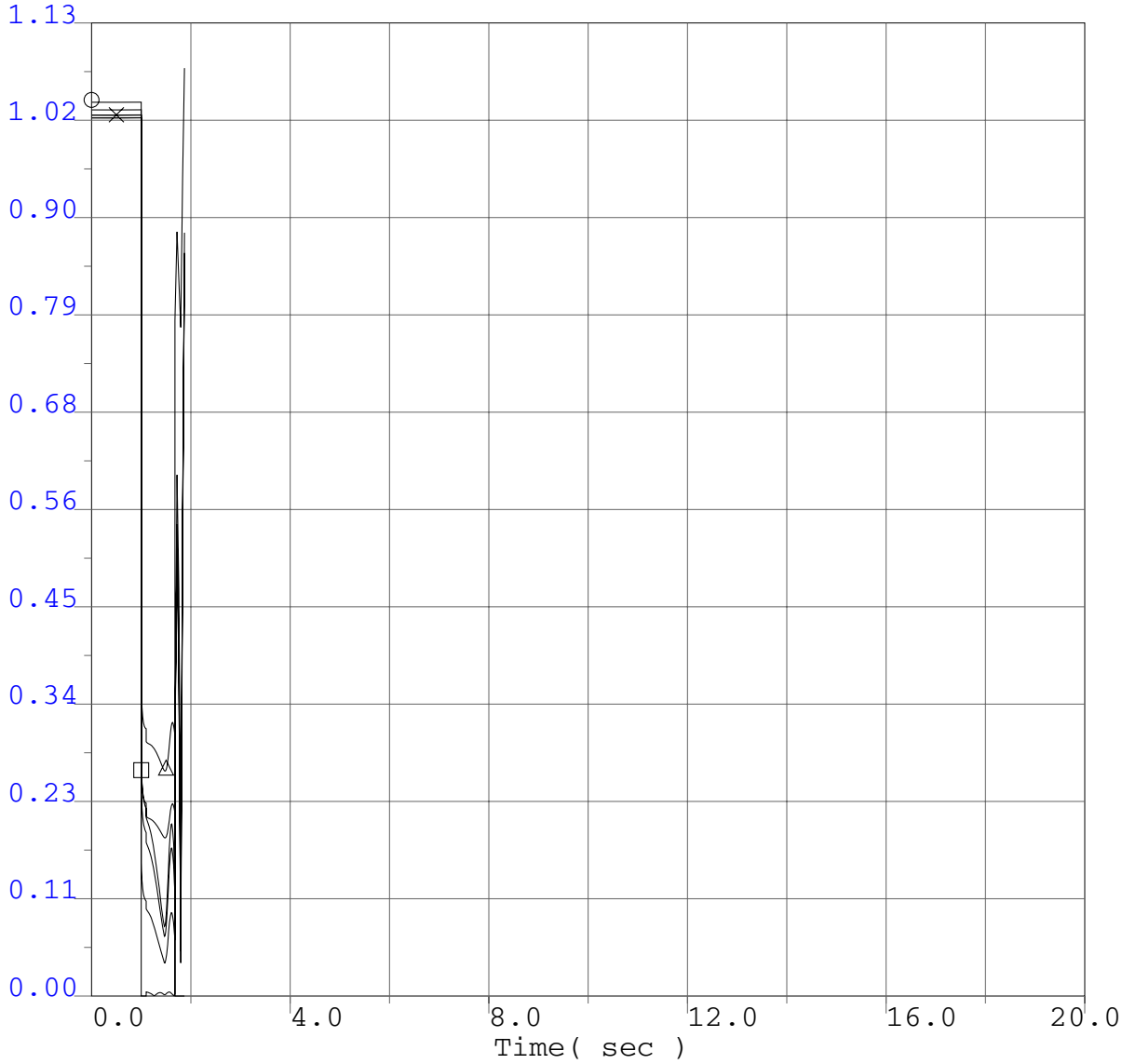

P0411 Project System Impact Study
2008 Summer Peak Base Case
P0411 @ 166.4MW
Humboldt Bay PP - Rio Dell 60kV line outage
3 ph 6 cyc flt @ Humboldt Bay PP 60kV bus & clr HBay-Rio Dell 60kV line @ 40.8

P0411 Project System Impact Study

Selected PG&E Bus Frequency Plots Adjacent to Fault

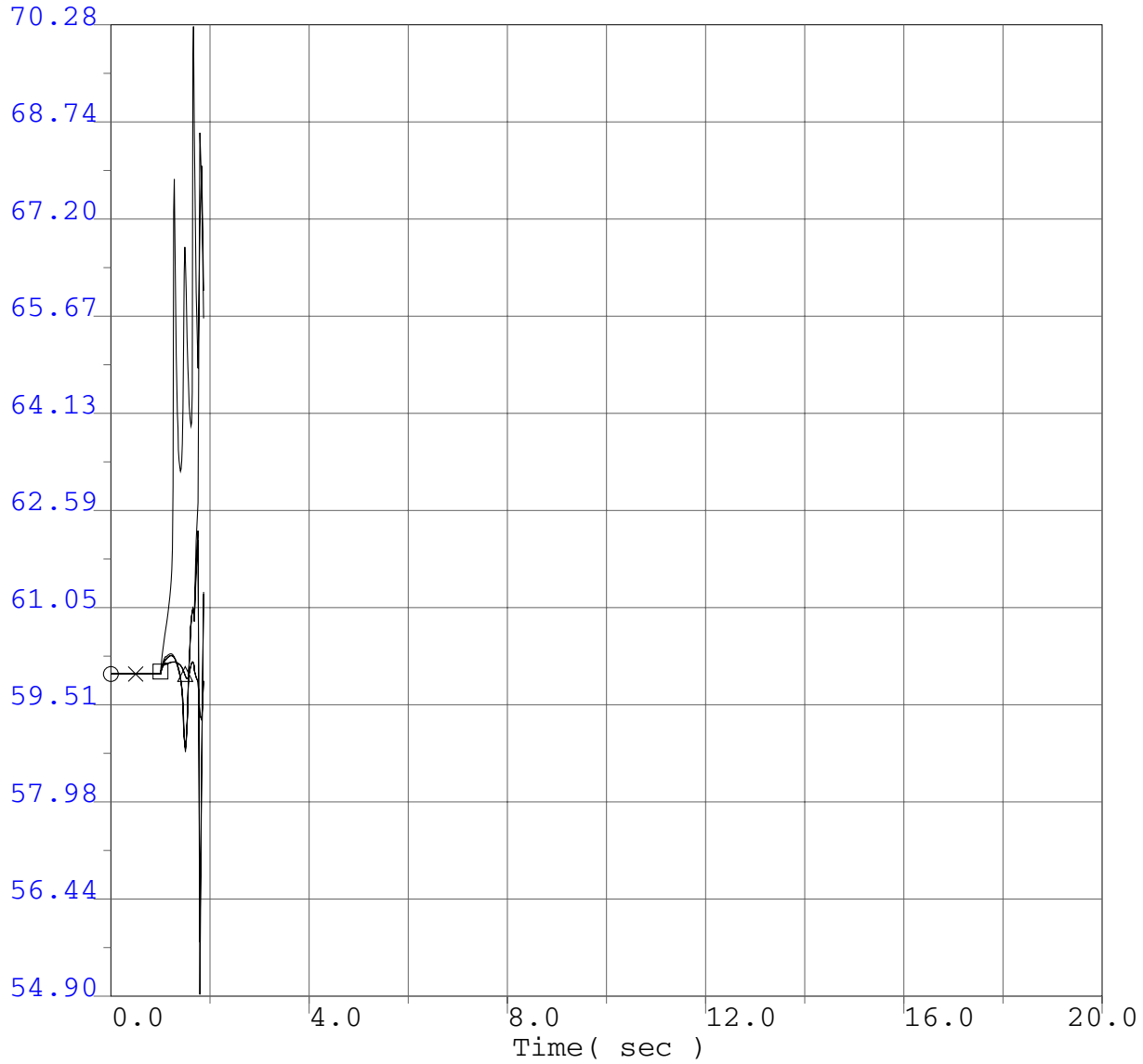

○	54.9	fbul	31090	HMBLT BY	60.0	"*" 1	70.28
×	54.9	fbus	31080	HUMBOLDT	60.0	"*" 1	70.28
□	54.9	fbul	31102	NEWBURG	60.0	"*" 1	70.28
△	54.9	fbus	31105	RIODLLTP	60.0	"*" 1	70.28
◇	54.9	fbul	31086	EUREKA	60.0	"*" 1	70.28
+	54.9	fbul	31082	HARRIS	60.0	"*" 1	70.28

P0411 Project System Impact Study
2008 Summer Peak Base Case
P0411 @ 166.4MW
Humboldt Bay PP - Rio Dell 60kV line outage
3 ph 6 cyc flt @ Humboldt Bay PP 60kV bus & clr HBay-Rio Dell 60kV line @ 40.8

P0411 Project System Impact Study

Project Generator Terminal Voltages

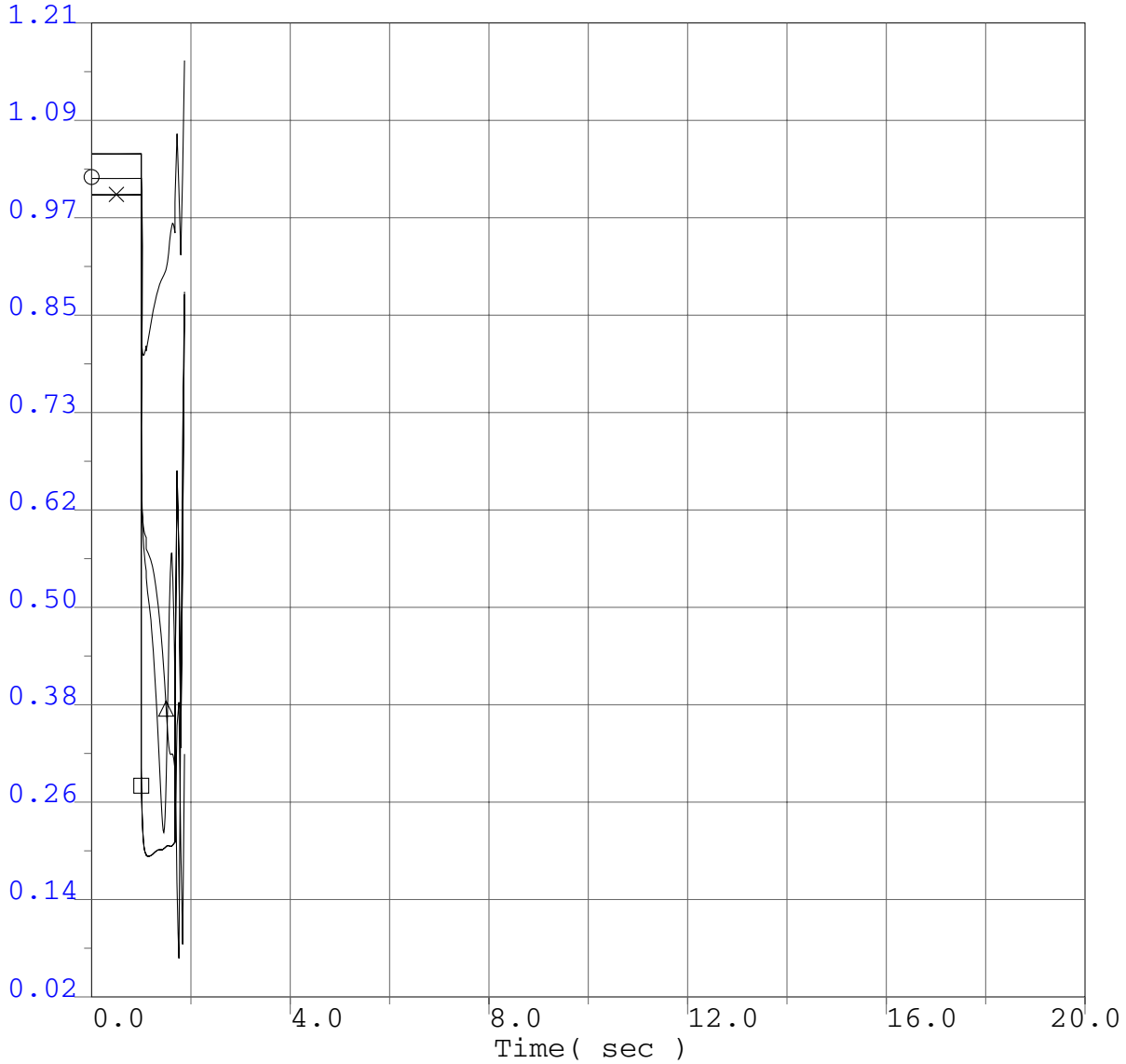

○	0.02	vt	31180	P0411G1	13.8	"1" 1	1.21
×	0.02	vt	31181	P0411G2	13.8	"5" 1	1.21
□	0.02	vt	31182	P0411G3	13.8	"8" 1	1.21
△	0.02	vt	31150	FAIRHAVN	13.8	"1" 1	1.21
◇	0.02	vt	31158	LP SAMOA	12.5	"1" 1	1.21

P0411 Project System Impact Study
2008 Summer Peak Base Case
P0411 @ 166.4MW
Humboldt Bay PP - Rio Dell 60kV line outage
3 ph 6 cyc flt @ Humboldt Bay PP 60kV bus & clr HBay-Rio Dell 60kV line @ 40.8

P0411 Project System Impact Study

Project Generator Rotor Speed

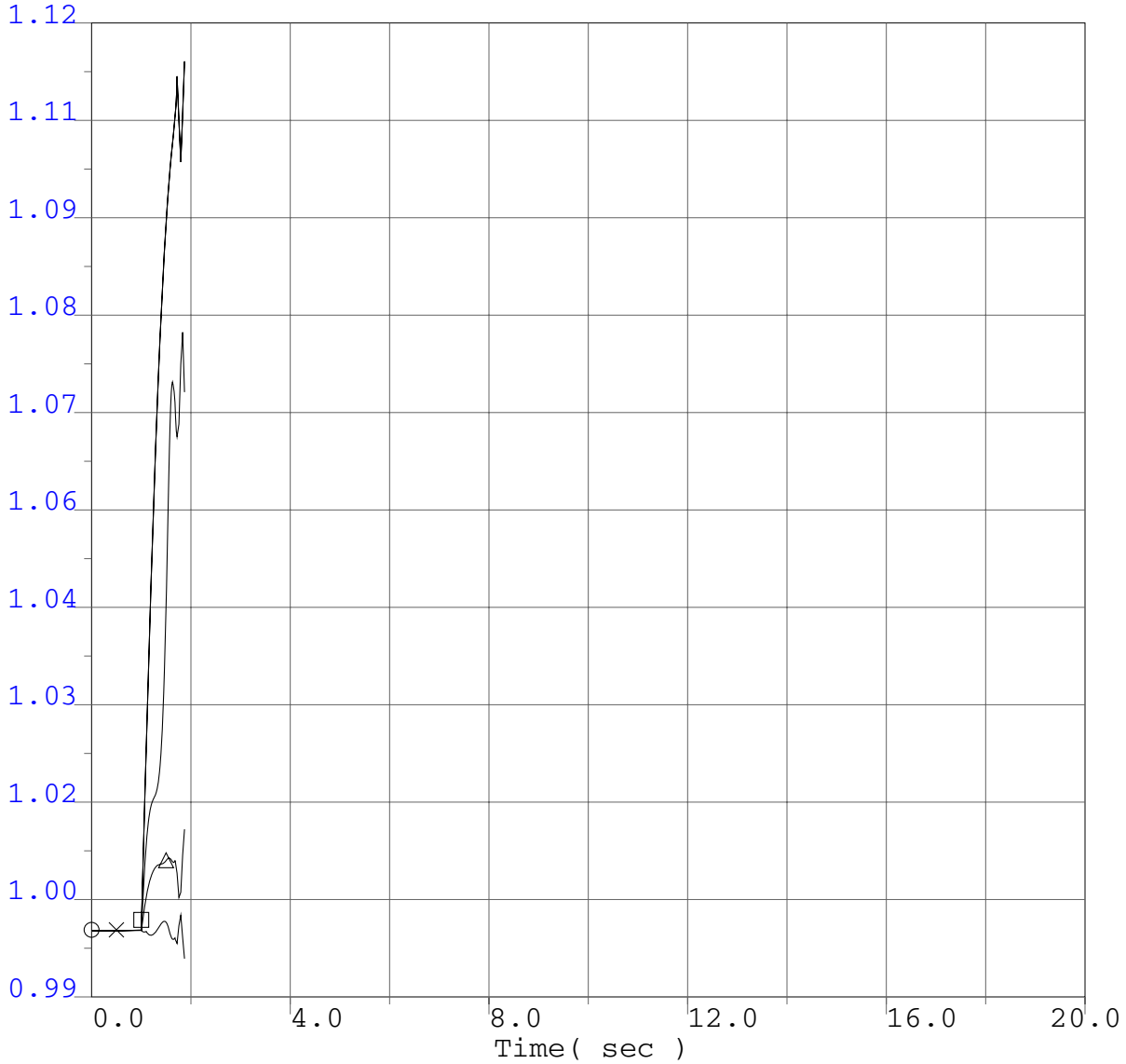

○	0.9913	spd	31180	P0411G1	13.8	"1" 1	1.1189
×	0.9913	spd	31181	P0411G2	13.8	"5" 1	1.1189
□	0.9913	spd	31182	P0411G3	13.8	"8" 1	1.1189
△	0.9913	spd	31150	FAIRHAVN	13.8	"1" 1	1.1189
◇	0.9913	spd	31158	LP SAMOA	12.5	"1" 1	1.1189

P0411 Project System Impact Study
2008 Summer Peak Base Case
P0411 @ 166.4MW
Humboldt Bay PP - Rio Dell 60kV line outage
3 ph 6 cyc flt @ Humboldt Bay PP 60kV bus & clr HBay-Rio Dell 60kV line @ 40.8

P0411 Project System Impact Study

Project Generator Terminal Power

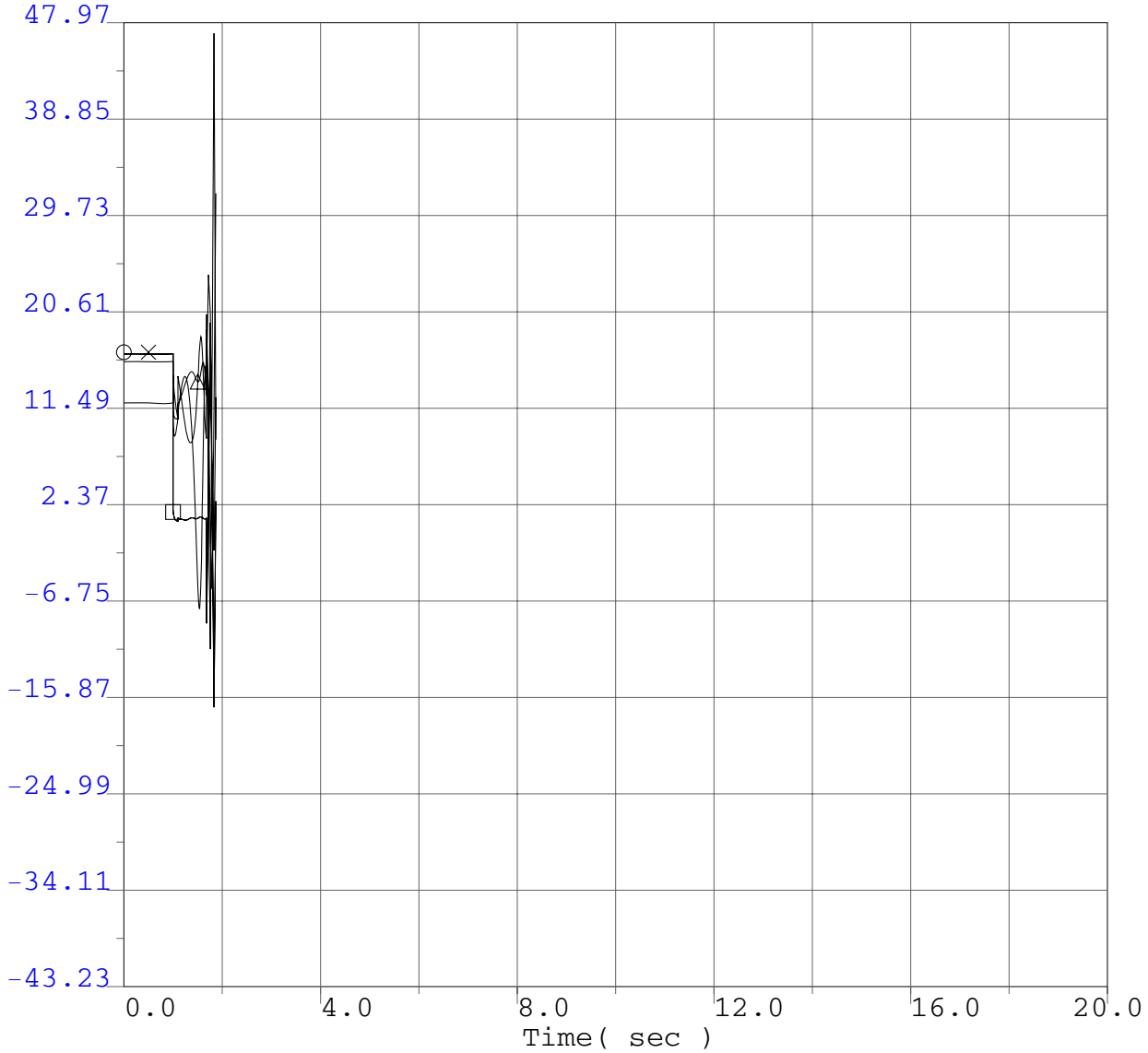

○	-43.23	pg	31180	P0411G1	13.8	"1" 1	47.97
×	-43.23	pg	31181	P0411G2	13.8	"5" 1	47.97
□	-43.23	pg	31182	P0411G3	13.8	"8" 1	47.97
△	-43.23	pg	31150	FAIRHAVN	13.8	"1" 1	47.97
◇	-43.23	pg	31158	LP SAMOA	12.5	"1" 1	47.97

P0411 Project System Impact Study
2008 Summer Peak Base Case
P0411 @ 166.4MW
Humboldt Bay PP - Rio Dell 60kV line outage
3 ph 6 cyc flt @ Humboldt Bay PP 60kV bus & clr HBay-Rio Dell 60kV line @ 40.8

P0411 Project System Impact Study

Project Generator Terminal Reactive Power

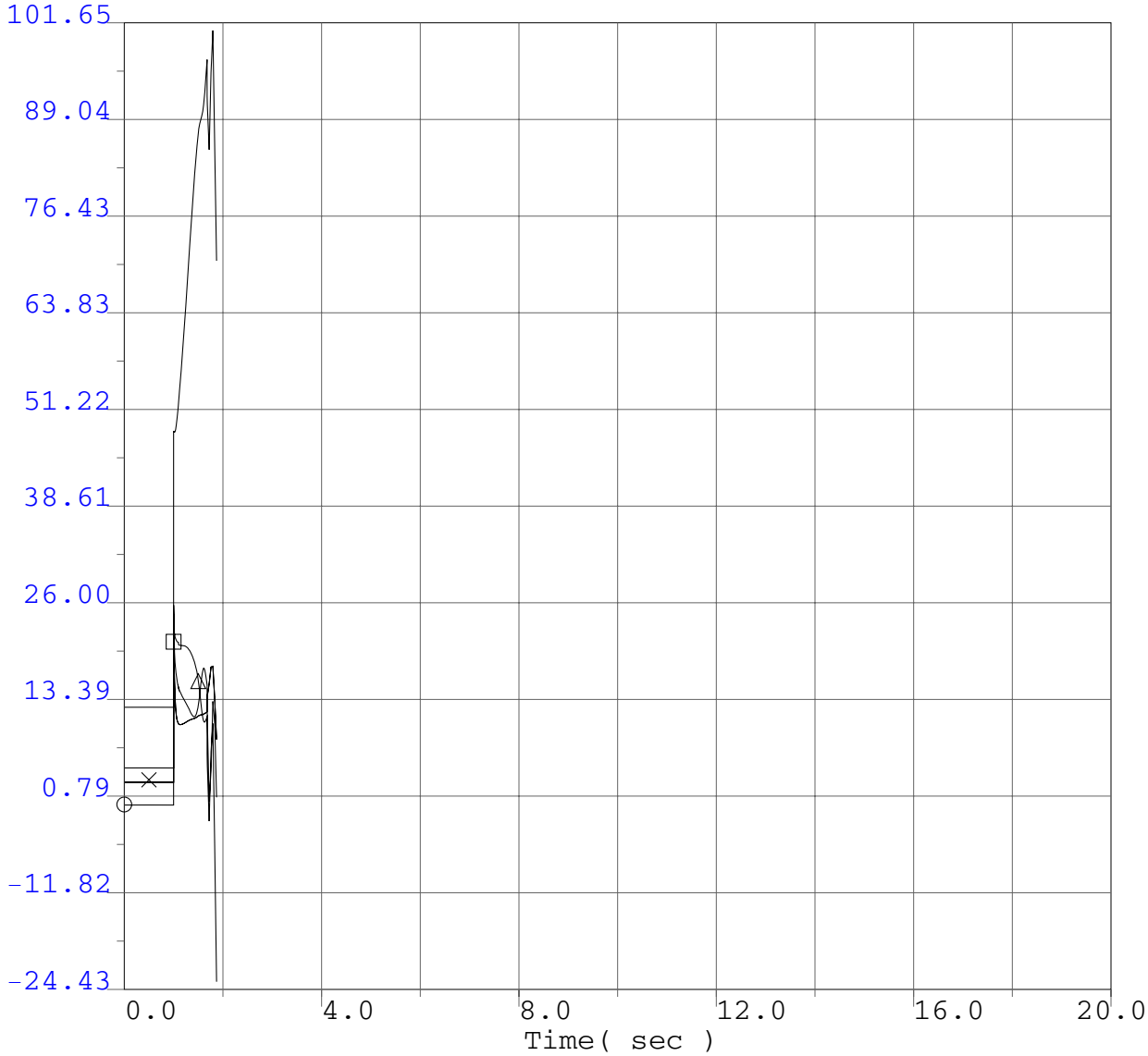

○	-24.43	qg	31180	P0411G1	13.8	"1"	1	101.65
×	-24.43	qg	31181	P0411G2	13.8	"5"	1	101.65
□	-24.43	qg	31182	P0411G3	13.8	"8"	1	101.65
△	-24.43	qg	31150	FAIRHAVN	13.8	"1"	1	101.65
◇	-24.43	qg	31158	LP SAMOA	12.5	"1"	1	101.65

P0411 Project System Impact Study
2008 Summer Peak Base Case
P0411 @ 166.4MW
Humboldt Bay PP - Rio Dell 60kV line outage
3 ph 6 cyc flt @ Humboldt Bay PP 60kV bus & clr HBay-Rio Dell 60kV line @ 40.8

P0411 Project System Impact Study

Selected WECC Bus Voltage Plots

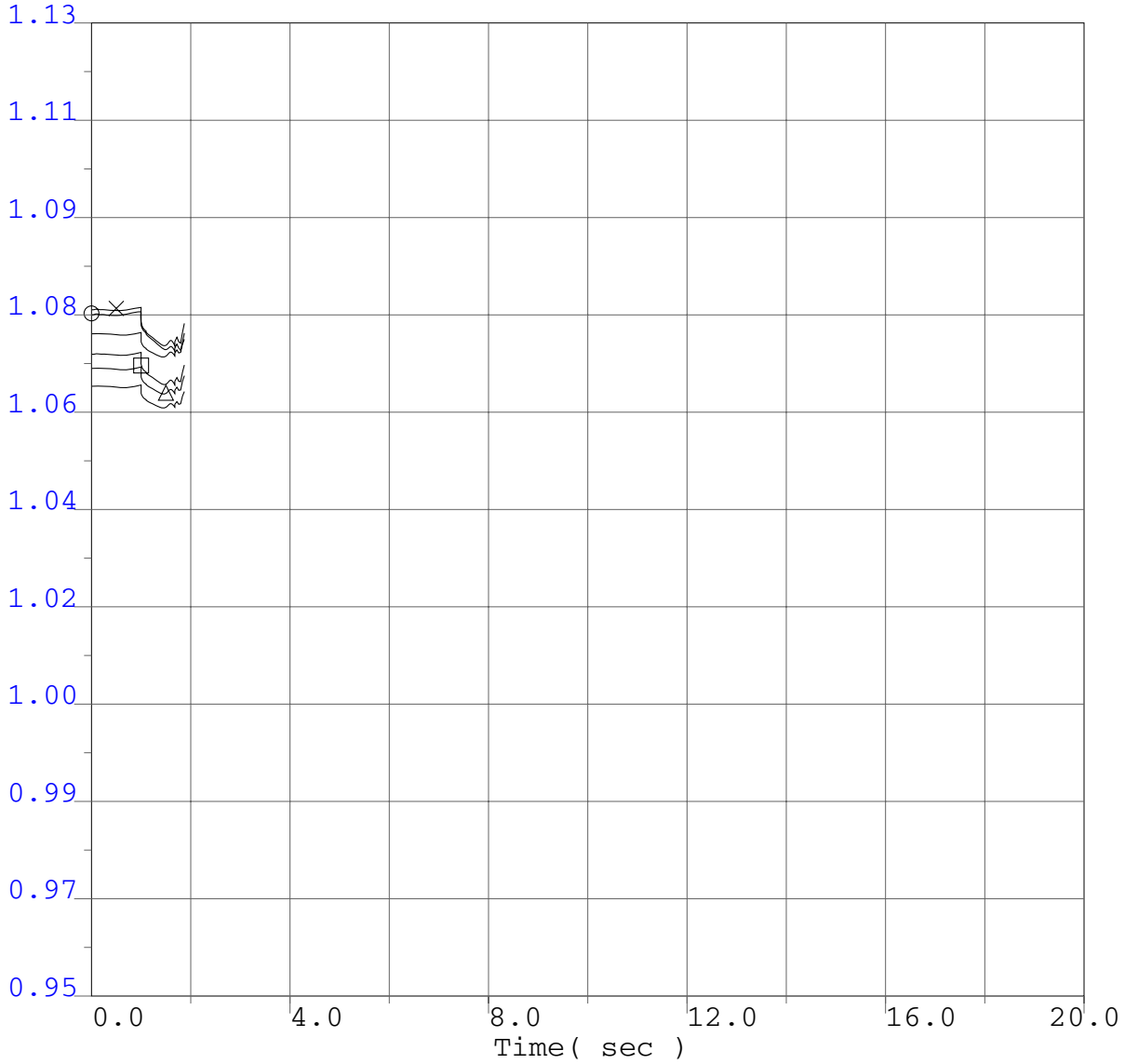

○	0.95	vbus	40687	MALIN	500.0	"*" 1	1.13
×	0.95	vbus	30005	ROUND MT	500.0	"*" 1	1.13
□	0.95	vbus	30015	TABLE MT	500.0	"*" 1	1.13
△	0.95	vbus	30030	VACA-DIX	500.0	"*" 1	1.13
◇	0.95	vbus	30040	TESLA	500.0	"*" 1	1.13
+	0.95	vbus	30035	TRACY	500.0	"*" 1	1.13

P0411 Project System Impact Study
2008 Summer Peak Base Case
P0411 @ 166.4MW
Humboldt Bay PP - Rio Dell 60kV line outage
3 ph 6 cyc flt @ Humboldt Bay PP 60kV bus & clr HBay-Rio Dell 60kV line @ 40.8

P0411 Project System Impact Study

Selected WECC Bus Voltage Plots

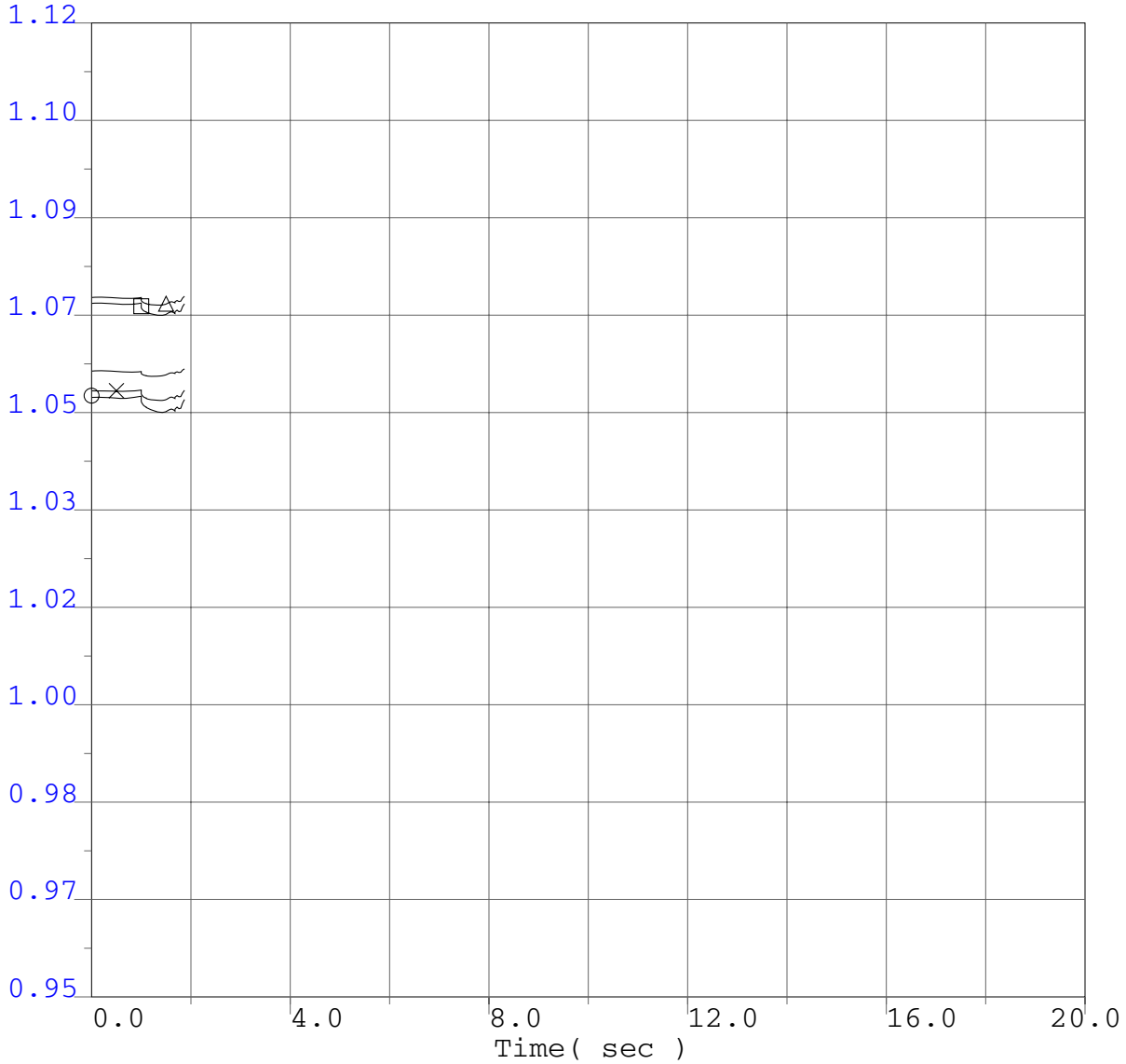

○ 0.95	vbus	30042	METCALF	500.0	"*"	1	1.12
× 0.95	vbus	30045	MOSSLAND	500.0	"*"	1	1.12
□ 0.95	vbus	30050	LOSBANOS	500.0	"*"	1	1.12
△ 0.95	vbus	30055	GATES	500.0	"*"	1	1.12
◇ 0.95	vbus	30060	MIDWAY	500.0	"*"	1	1.12

P0411 Project System Impact Study
2008 Summer Peak Base Case
P0411 @ 166.4MW
Humboldt Bay PP - Rio Dell 60kV line outage
3 ph 6 cyc flt @ Humboldt Bay PP 60kV bus & clr HBay-Rio Dell 60kV line @ 40.8

P0411 Project System Impact Study

Selected WECC Bus Voltage Plots

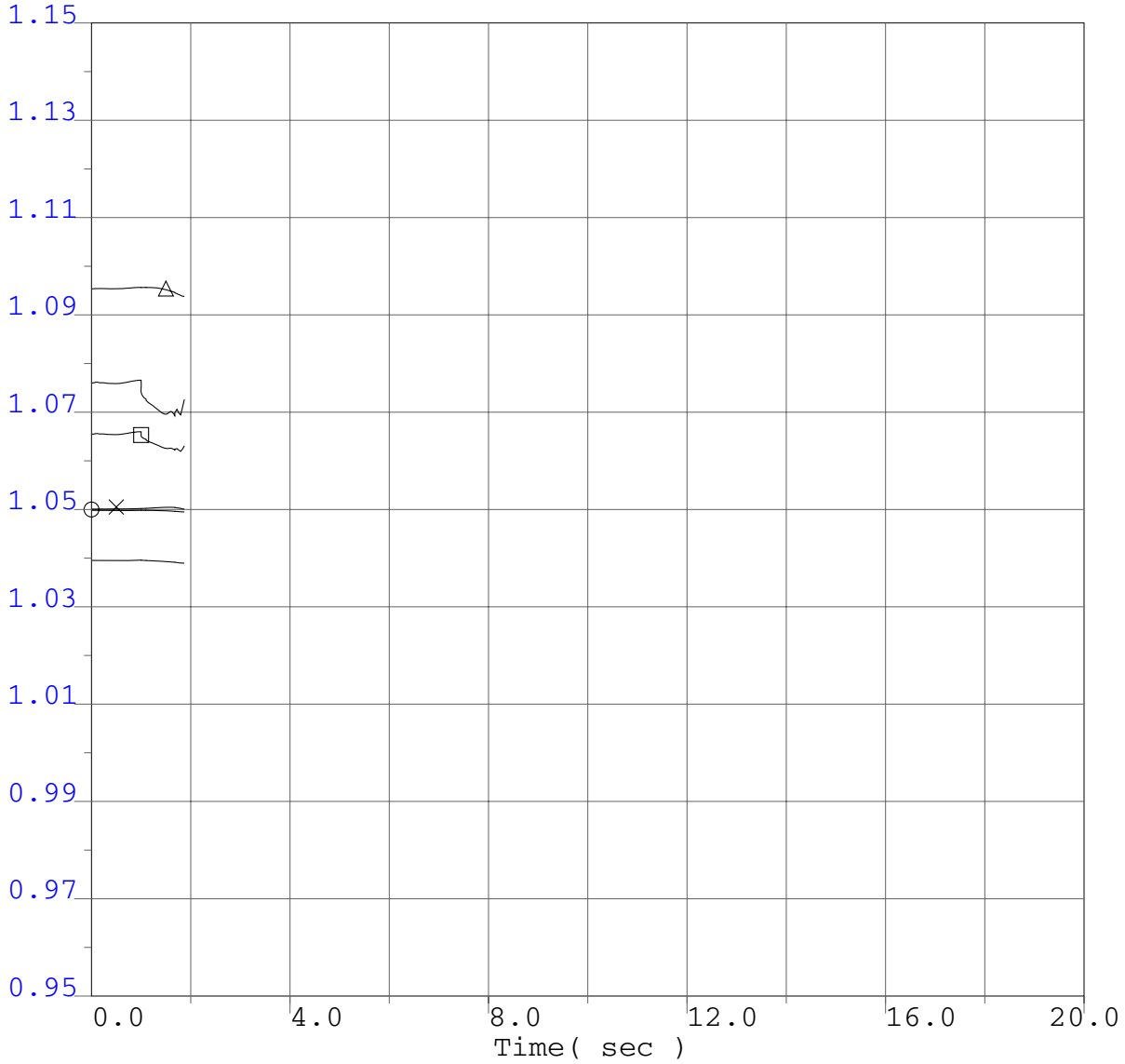

○	0.95	vbus	14001	FOURCORN	500.0	"*"	1	1.15
×	0.95	vbus	50703	NIC500	500.0	"*"	1	1.15
□	0.95	vbus	60240	MIDPOINT	500.0	"*"	1	1.15
△	0.95	vbus	62012	TOWN2	500.0	"*"	1	1.15
◇	0.95	vbus	40687	MALIN	500.0	"*"	1	1.15
+	0.95	vbus	66340	SIGURD	345.0	"*"	1	1.15

P0411 Project System Impact Study
2008 Summer Peak Base Case
P0411 @ 166.4MW
Humboldt Bay PP - Rio Dell 60kV line outage
3 ph 6 cyc flt @ Humboldt Bay PP 60kV bus & clr HBay-Rio Dell 60kV line @ 40.8

P0411 Project System Impact Study

Selected WECC Bus Voltage Plots

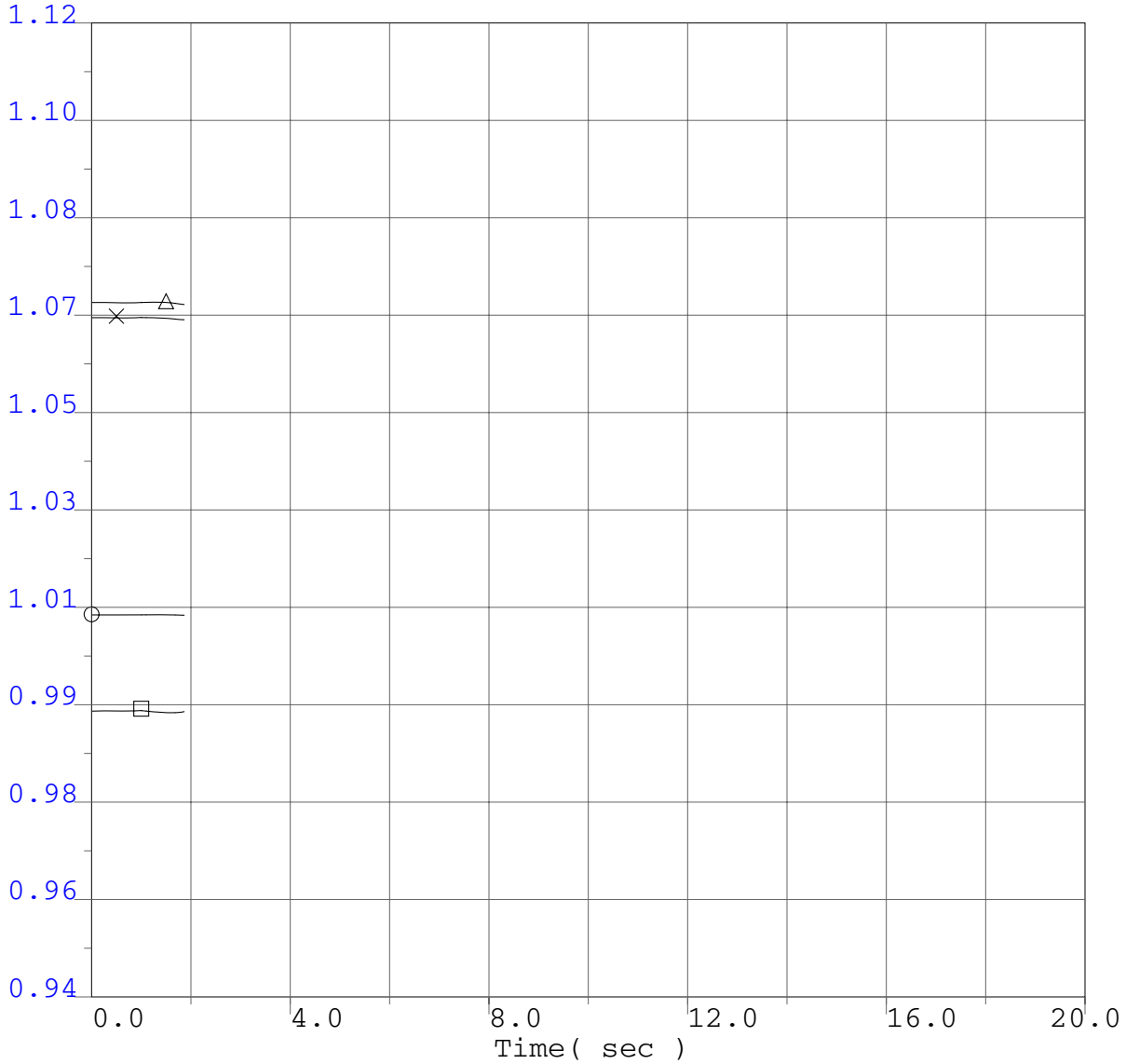

○ 0.94	vbus	54150	LANGDON2	500.0	"*" 1	1.12
× 0.94	vbus	14003	NAVAJO	500.0	"*" 1	1.12
□ 0.94	vbus	24153	VESTAL	230.0	"*" 1	1.12
△ 0.94	vbus	22360	IMPRLVLY	500.0	"*" 1	1.12

P0411 Project System Impact Study
2008 Summer Peak Base Case
P0411 @ 166.4MW
Humboldt Bay PP - Rio Dell 60kV line outage
3 ph 6 cyc flt @ Humboldt Bay PP 60kV bus & clr HBay-Rio Dell 60kV line @ 40.8

P0411 Project System Impact Study

Selected WECC Bus Frequency Plots

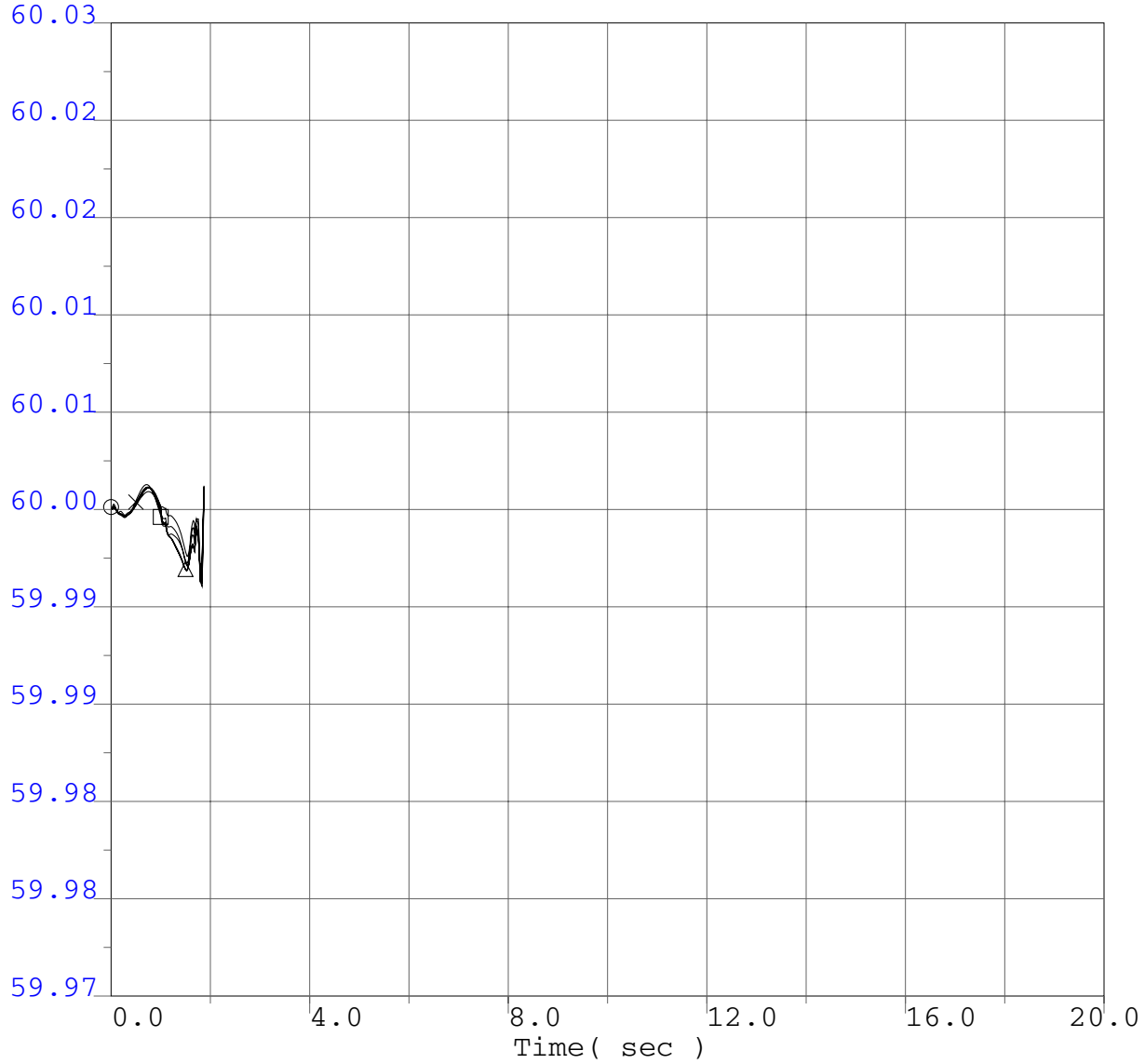

○	59.97	fbus	40687	MALIN	500.0	"*" 1	60.03
×	59.97	fbus	30005	ROUND MT	500.0	"*" 1	60.03
□	59.97	fbus	30015	TABLE MT	500.0	"*" 1	60.03
△	59.97	fbus	30030	VACA-DIX	500.0	"*" 1	60.03
◇	59.97	fbus	30040	TESLA	500.0	"*" 1	60.03
+	59.97	fbus	30035	TRACY	500.0	"*" 1	60.03

P0411 Project System Impact Study
2008 Summer Peak Base Case
P0411 @ 166.4MW
Humboldt Bay PP - Rio Dell 60kV line outage
3 ph 6 cyc flt @ Humboldt Bay PP 60kV bus & clr HBay-Rio Dell 60kV line @ 40.8

P0411 Project System Impact Study

Selected WECC Bus Frequency Plots

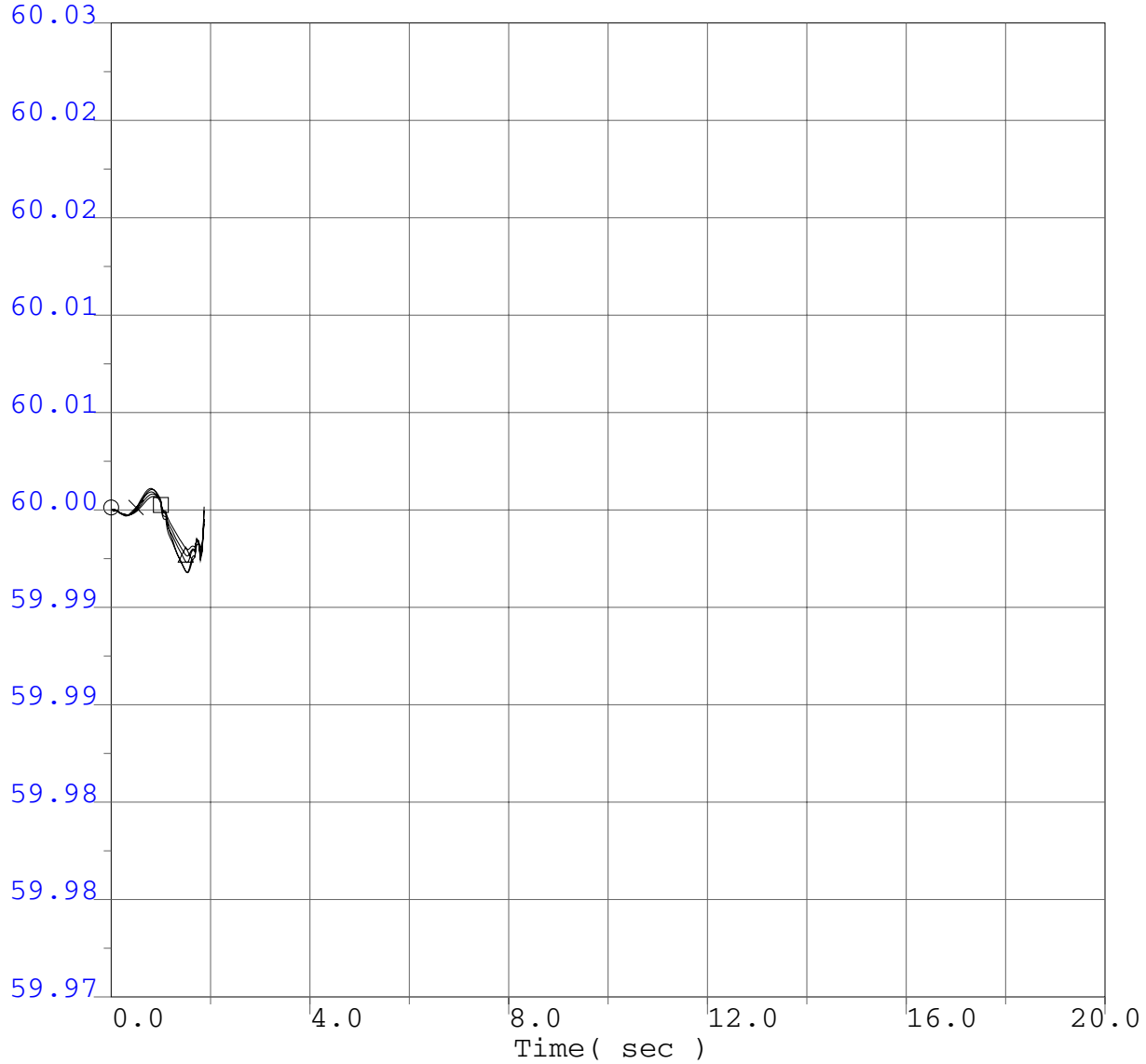

○ 59.97	fbus	30042	METCALF	500.0	"*"	1	60.03
× 59.97	fbus	30045	MOSSLAND	500.0	"*"	1	60.03
□ 59.97	fbus	30050	LOSBANOS	500.0	"*"	1	60.03
△ 59.97	fbus	30055	GATES	500.0	"*"	1	60.03
◇ 59.97	fbus	30060	MIDWAY	500.0	"*"	1	60.03

P0411 Project System Impact Study
2008 Summer Peak Base Case
P0411 @ 166.4MW
Humboldt Bay PP - Rio Dell 60kV line outage
3 ph 6 cyc flt @ Humboldt Bay PP 60kV bus & clr HBay-Rio Dell 60kV line @ 40.8

P0411 Project System Impact Study

Selected WECC Bus Frequency Plots

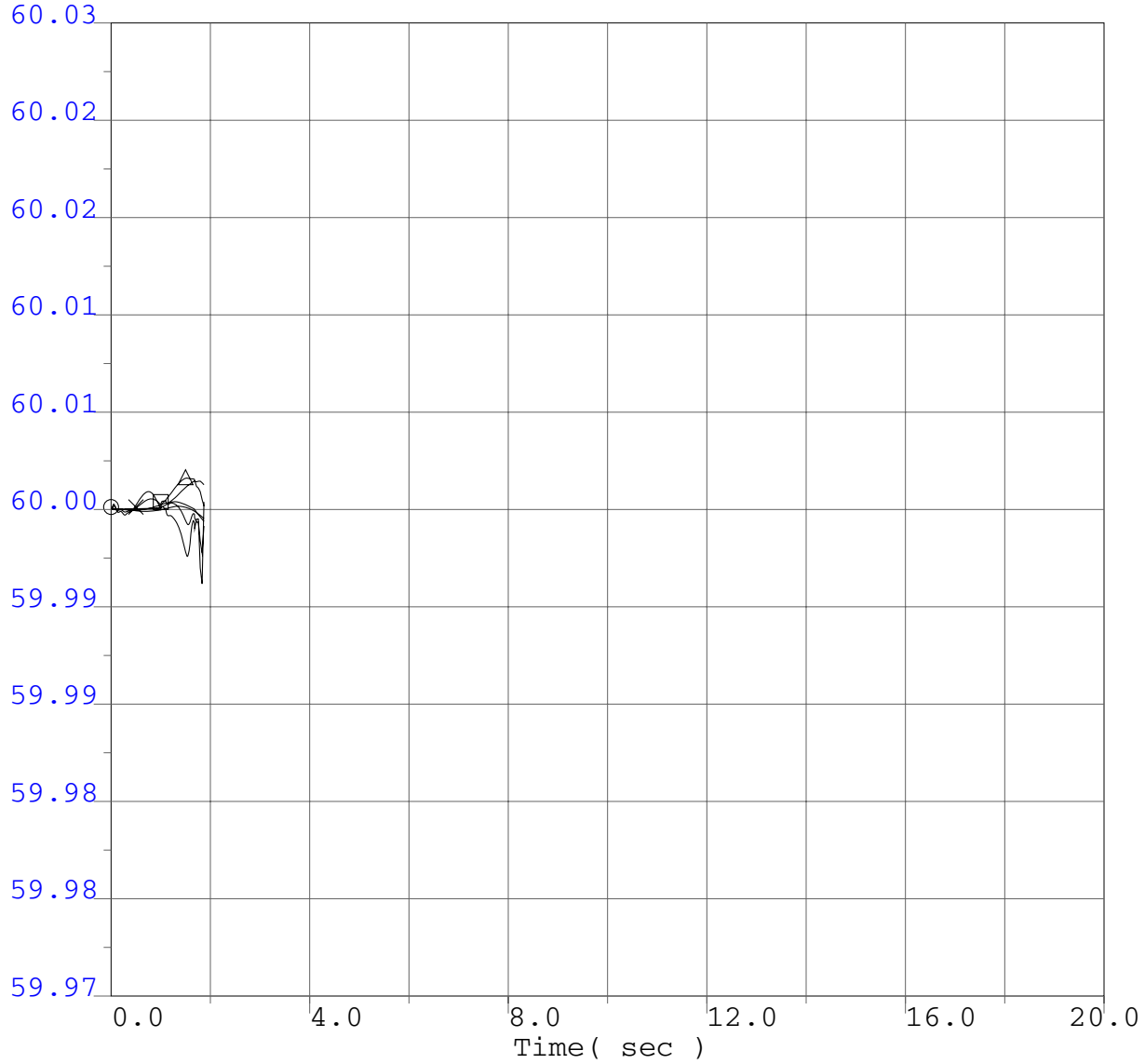

○ 59.97	fbus	14001	FOURCORN	500.0	"*"	1	60.03
× 59.97	fbus	50703	NIC500	500.0	"*"	1	60.03
□ 59.97	fbus	60240	MIDPOINT	500.0	"*"	1	60.03
△ 59.97	fbus	62012	TOWN2	500.0	"*"	1	60.03
◇ 59.97	fbus	40687	MALIN	500.0	"*"	1	60.03
+ 59.97	fbus	66340	SIGURD	345.0	"*"	1	60.03

P0411 Project System Impact Study
2008 Summer Peak Base Case
P0411 @ 166.4MW
Humboldt Bay PP - Rio Dell 60kV line outage
3 ph 6 cyc flt @ Humboldt Bay PP 60kV bus & clr HBay-Rio Dell 60kV line @ 40.8

P0411 Project System Impact Study

Selected WECC Bus Frequency Plots

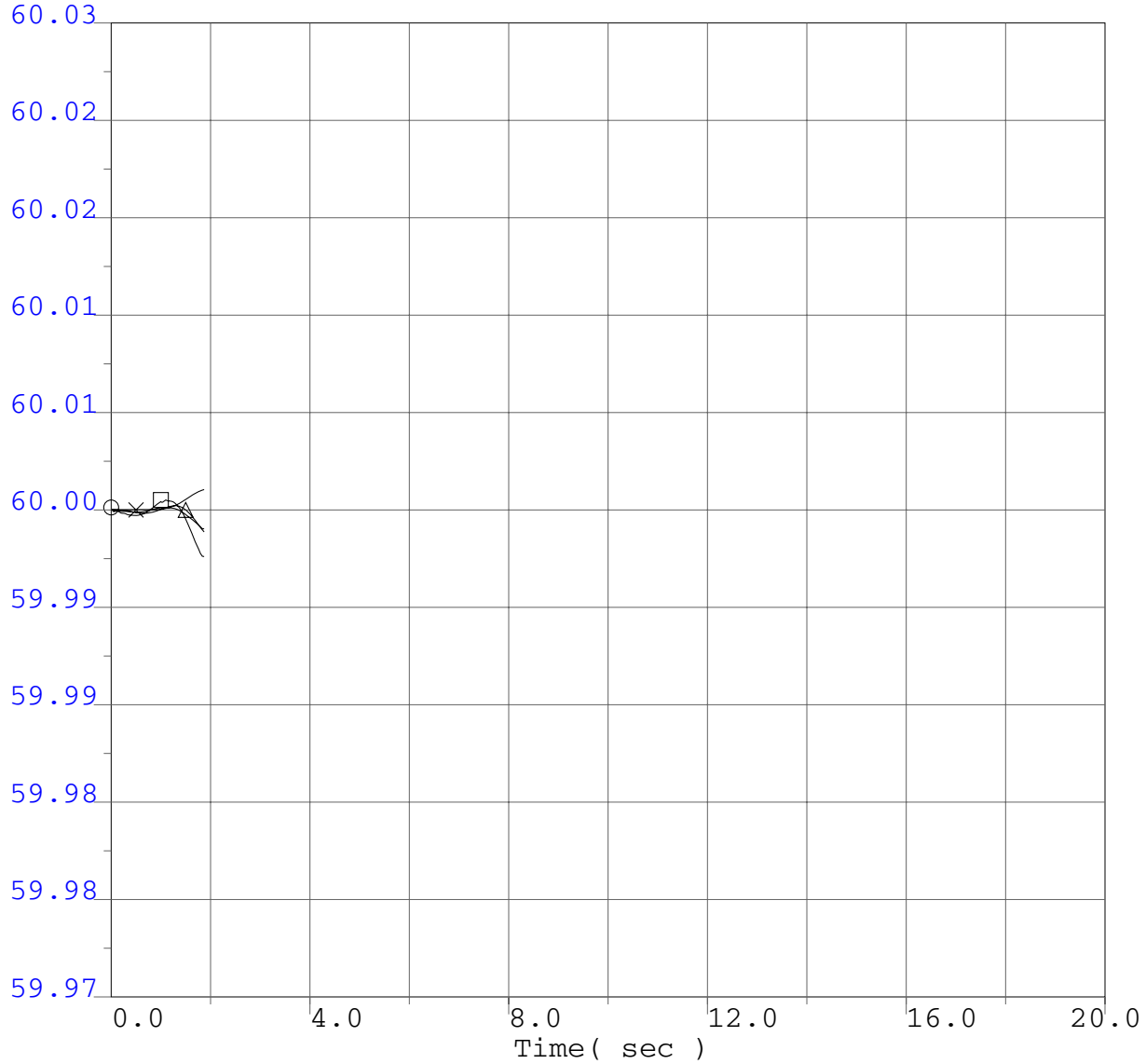

○ 59.97	fbus	54150	LANGDON2	500.0	"*"	1	60.03
× 59.97	fbus	14003	NAVAJO	500.0	"*"	1	60.03
□ 59.97	fbus	24153	VESTAL	230.0	"*"	1	60.03
△ 59.97	fbus	22360	IMPRLVLY	500.0	"*"	1	60.03

P0411 Project System Impact Study
2008 Summer Peak Base Case
P0411 @ 166.4MW
Humboldt Bay PP - Rio Dell 60kV line outage
3 ph 6 cyc flt @ Humboldt Bay PP 60kV bus & clr HBay-Rio Dell 60kV line @ 40.8

P0411 Project System Impact Study

WECC Generator Rotor Angle

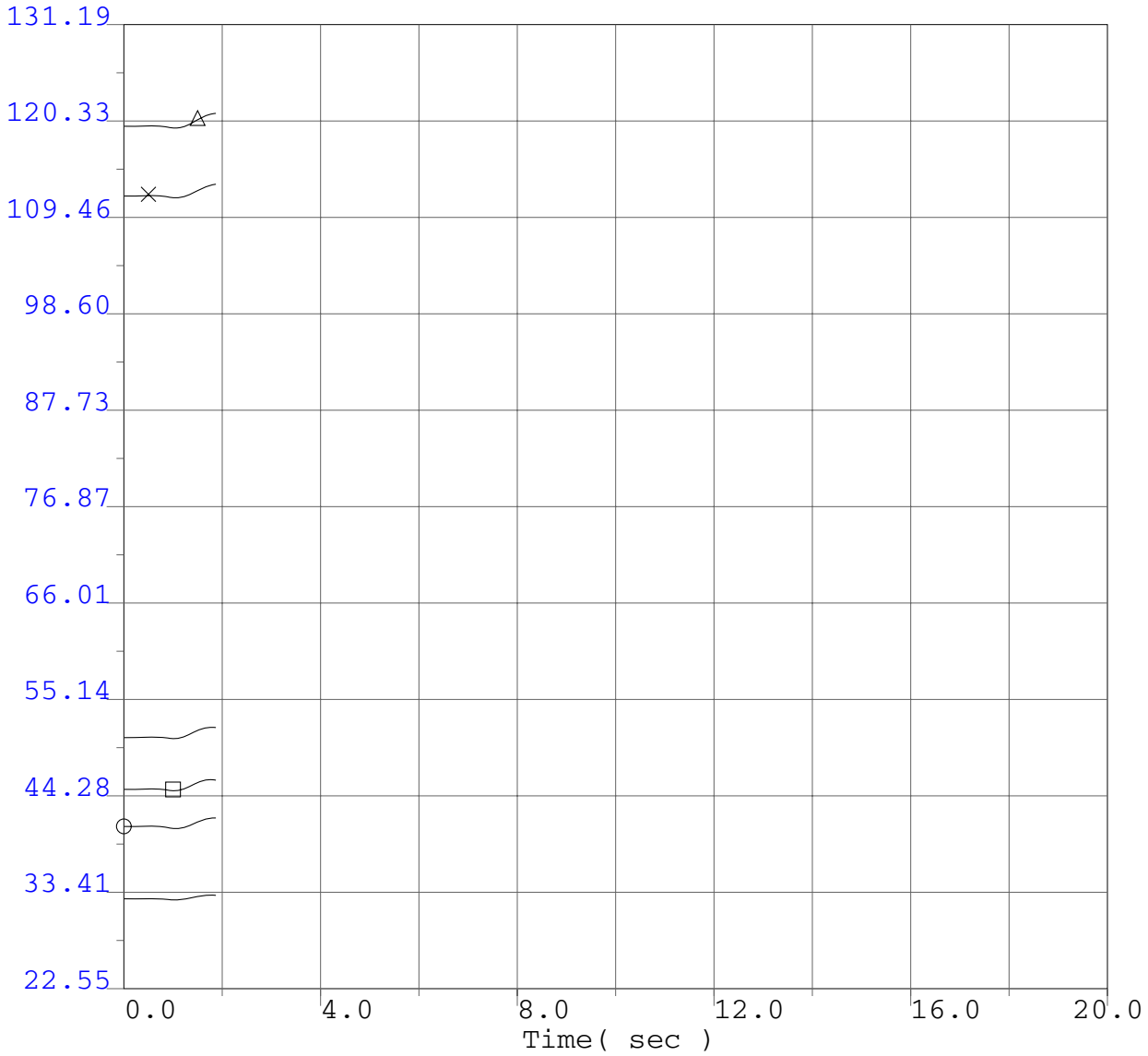

○	22.55	ang	14914	FCNGN4CC	22.0	"H" 1	131.19
×	22.55	ang	50500	GMS G6	13.8	"1" 1	131.19
□	22.55	ang	60100	BRWNL 5	13.8	"1" 1	131.19
△	22.55	ang	62048	COLSTP 3	26.0	"1" 1	131.19
◇	22.55	ang	41701	JONDAY01	13.8	"1" 1	131.19
+	22.55	ang	36411	DIABLO 1	25.0	"1" 1	131.19

P0411 Project System Impact Study
2008 Summer Peak Base Case
P0411 @ 166.4MW
Humboldt Bay PP - Rio Dell 60kV line outage
3 ph 6 cyc flt @ Humboldt Bay PP 60kV bus & clr HBay-Rio Dell 60kV line @ 40.8

P0411 Project System Impact Study

WECC Generator Rotor Angle

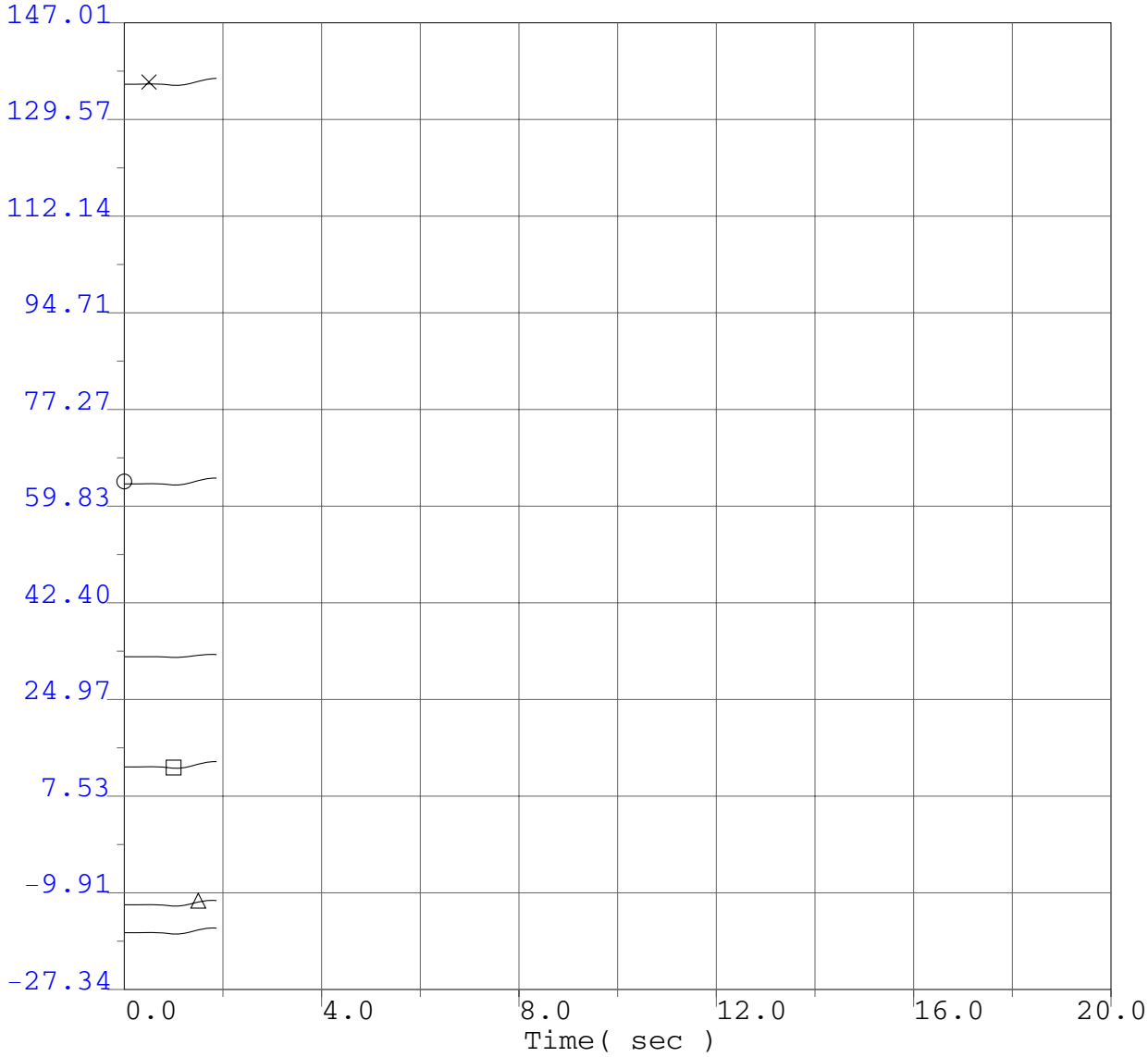

○	-27.34	ang	65490	EHUNTR 1	24.0	"1" 1	147.01
×	-27.34	ang	54280	SUND#2GN	18.0	"2" 1	147.01
□	-27.34	ang	79151	GLENC3-4	13.8	"3" 1	147.01
△	-27.34	ang	24130	S.ONOFR3	22.0	"3" 1	147.01
◇	-27.34	ang	22244	ENCINA 5	24.0	"1" 1	147.01
+	-27.34	ang	36411	DIABLO 1	25.0	"1" 1	147.01

P0411 Project System Impact Study
2008 Summer Peak Base Case
P0411 @ 166.4MW
Humboldt Bay PP - Rio Dell 60kV line outage
3 ph 6 cyc flt @ Humboldt Bay PP 60kV bus & clr HBay-Rio Dell 60kV line @ 40.8

P0411 Project System Impact Study

Selected PG&E Transmission Line Flows (MW)

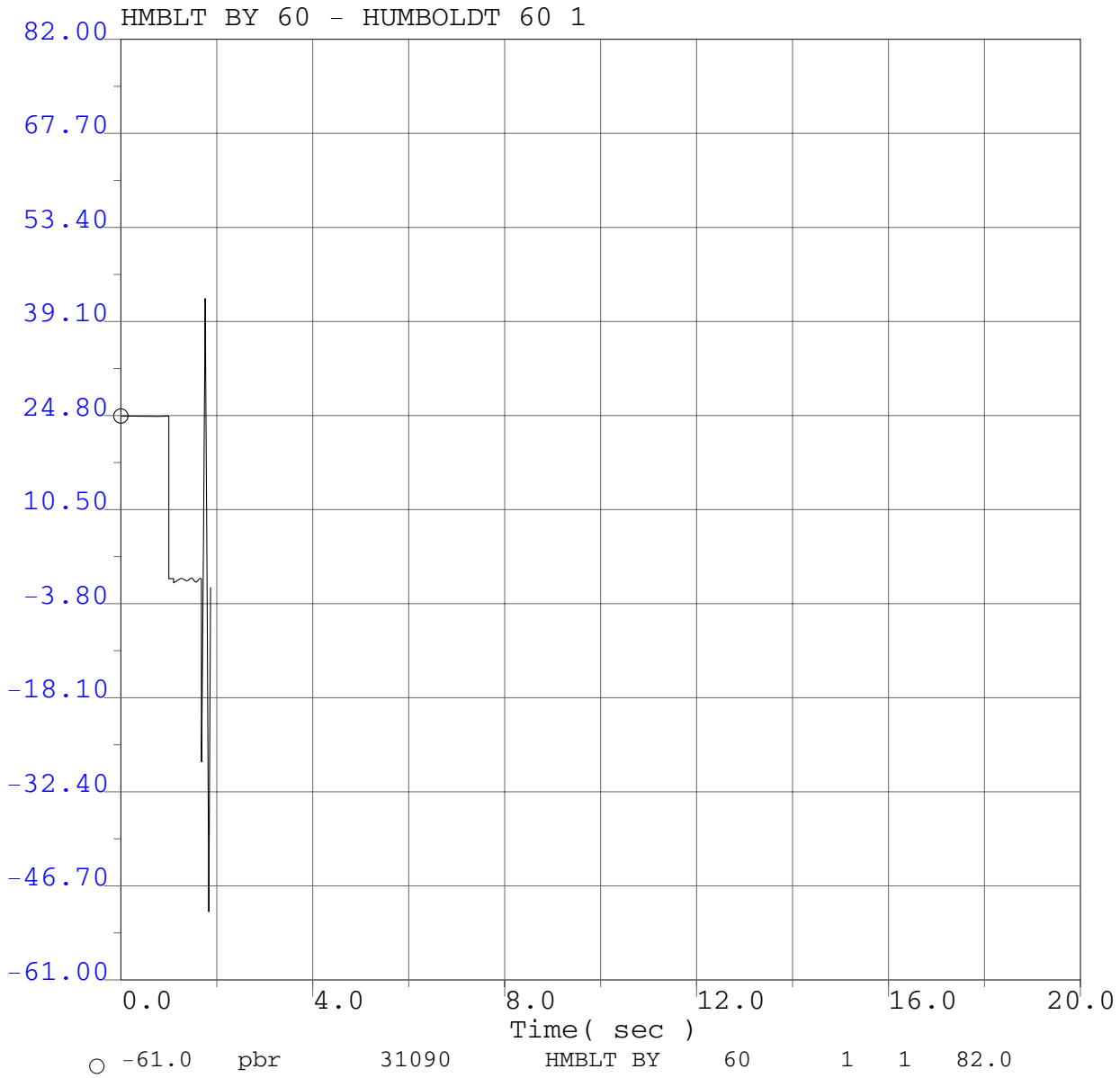

P0411 Project System Impact Study
2008 Summer Peak Base Case
P0411 @ 166.4MW
Humboldt Bay PP - Rio Dell 60kV line outage
3 ph 6 cyc flt @ Humboldt Bay PP 60kV bus & clr HBay-Rio Dell 60kV line @ 40.8

P0411 Project System Impact Study

Selected PG&E Transmission Line Flows (MW)

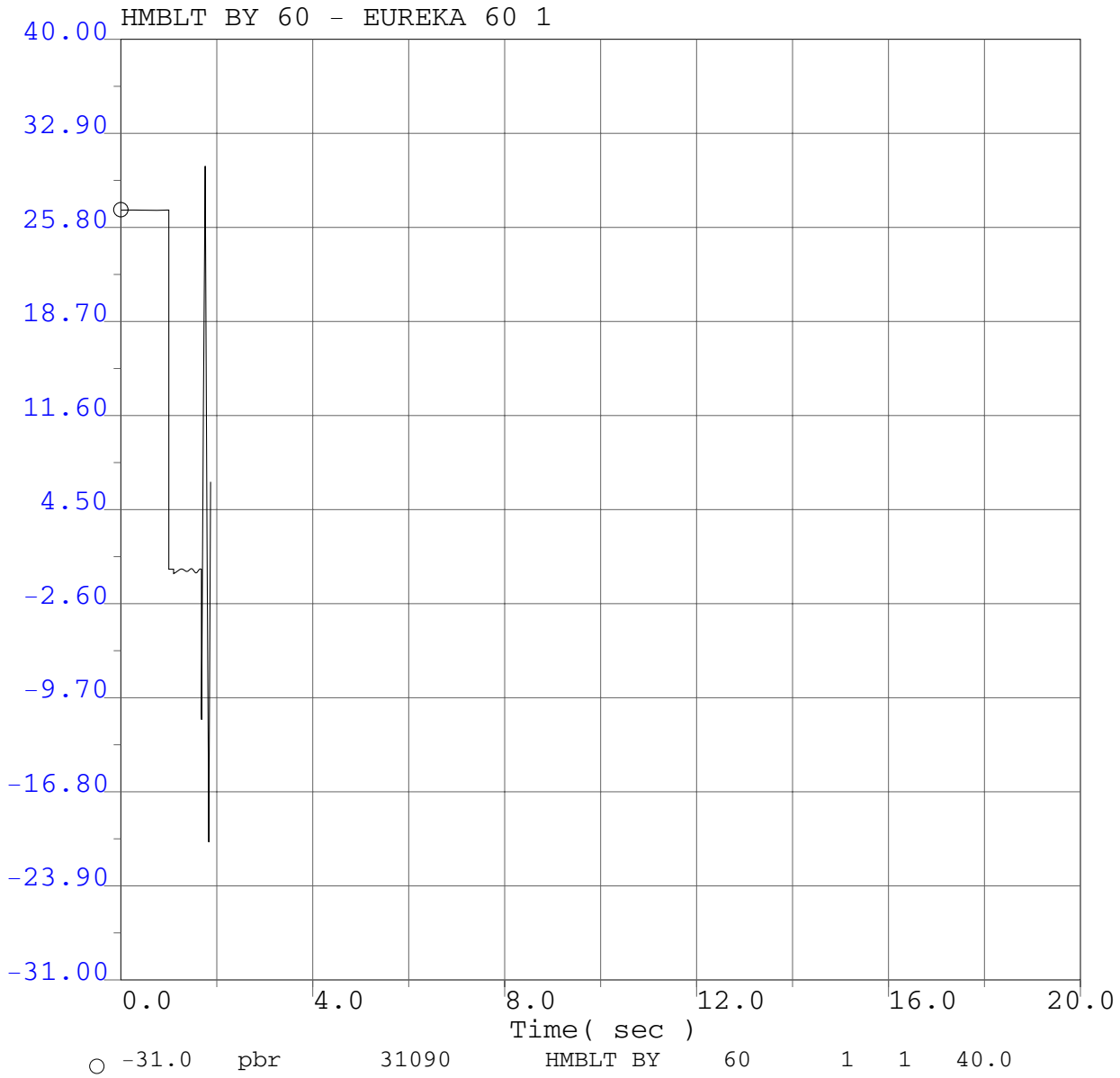

P0411 Project System Impact Study
2008 Summer Peak Base Case
P0411 @ 166.4MW
Humboldt Bay PP - Rio Dell 60kV line outage
3 ph 6 cyc flt @ Humboldt Bay PP 60kV bus & clr HBay-Rio Dell 60kV line @ 40.8

P0411 Project System Impact Study

Selected PG&E Transmission Line Flows (MW)

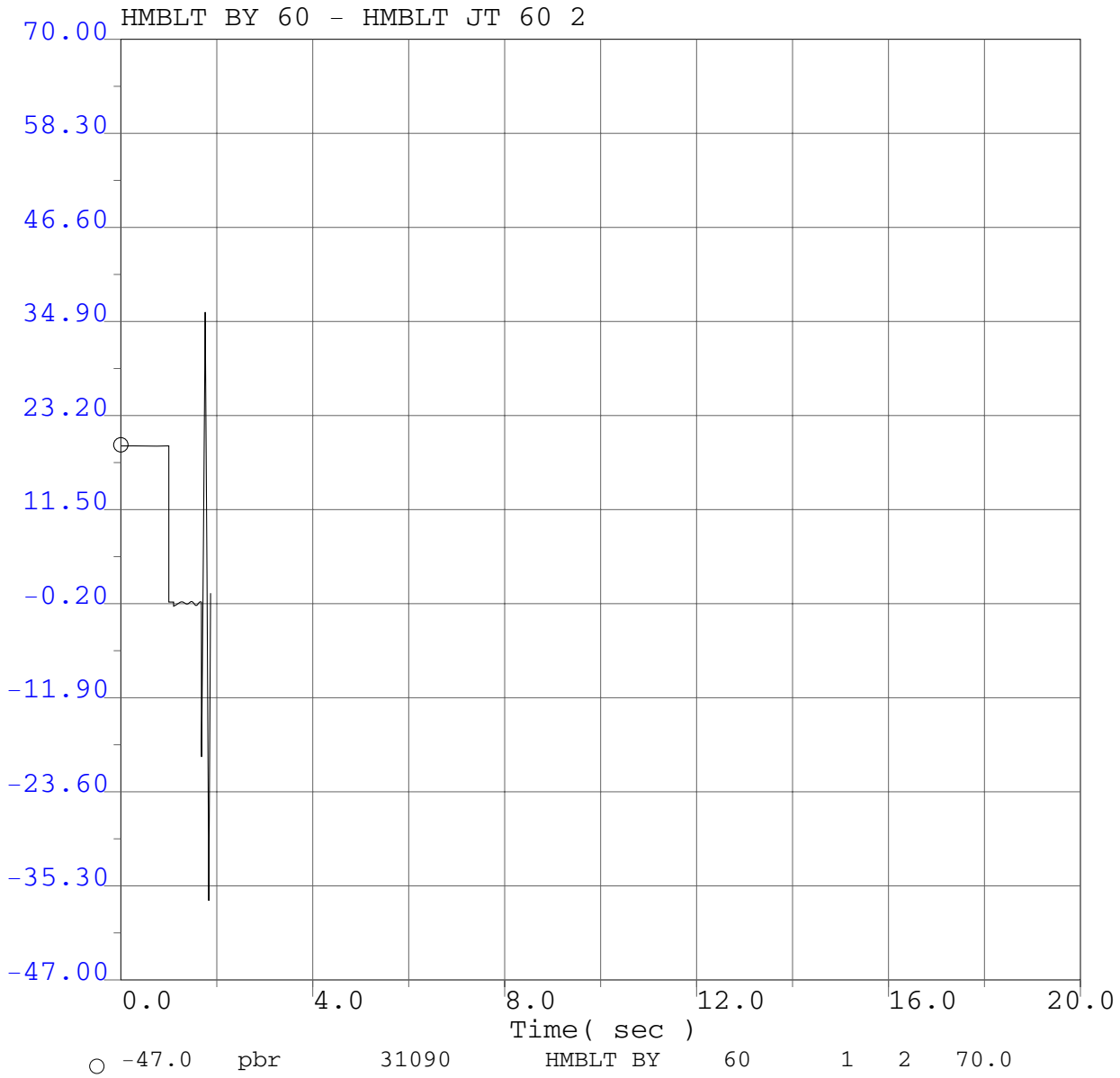

P0411 Project System Impact Study
2008 Summer Peak Base Case
P0411 @ 166.4MW
Humboldt Bay PP - Rio Dell 60kV line outage
3 ph 6 cyc flt @ Humboldt Bay PP 60kV bus & clr HBay-Rio Dell 60kV line @ 40.8

P0411 Project System Impact Study

Selected PG&E Transmission Line Flows (MW)

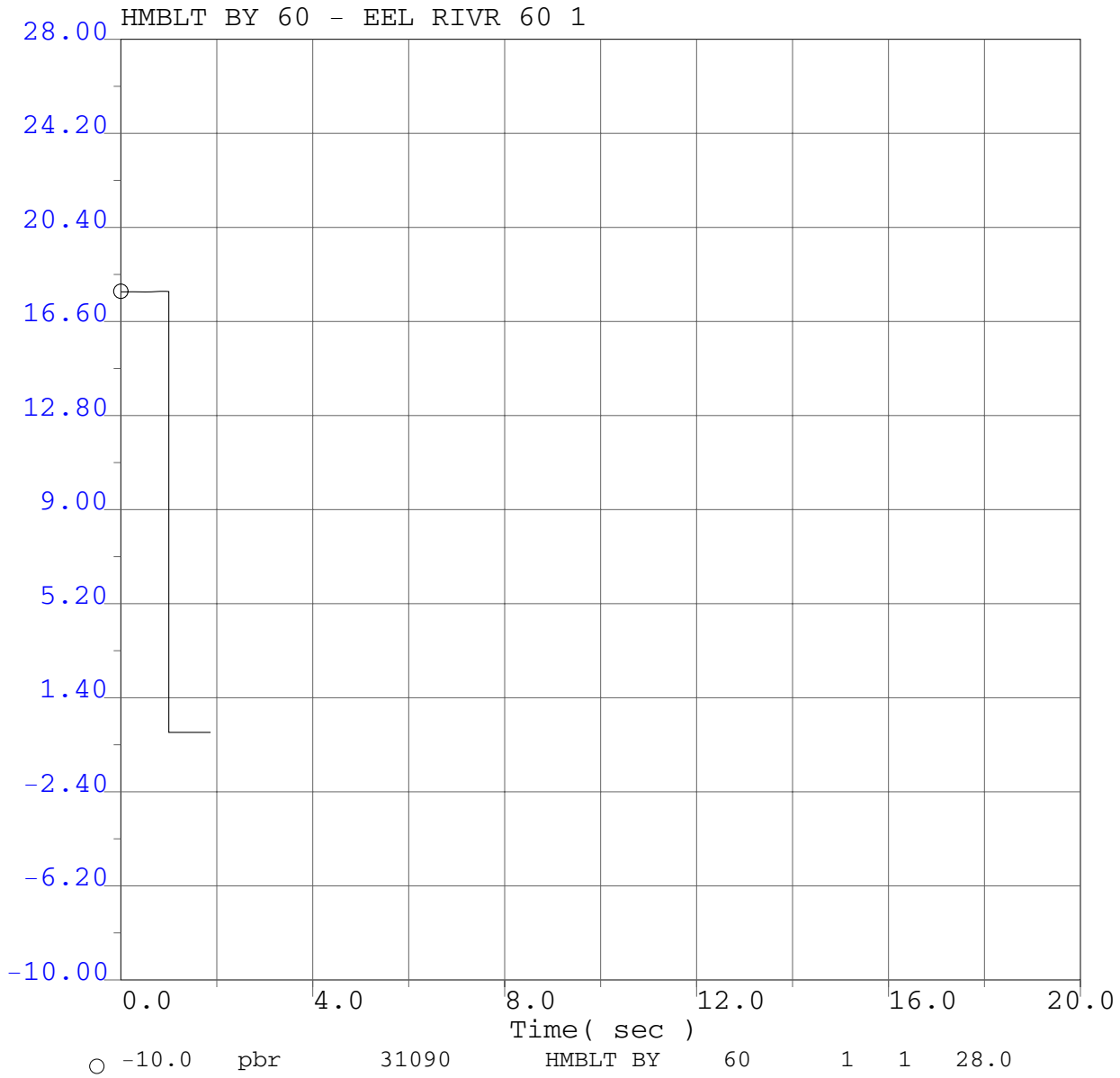

P0411 Project System Impact Study
2008 Summer Peak Base Case
P0411 @ 166.4MW
Humboldt Bay PP - Rio Dell 60kV line outage
3 ph 6 cyc flt @ Humboldt Bay PP 60kV bus & clr HBay-Rio Dell 60kV line @ 40.8

P0411 Project System Impact Study

Selected PG&E Transmission Line Flows (MW)

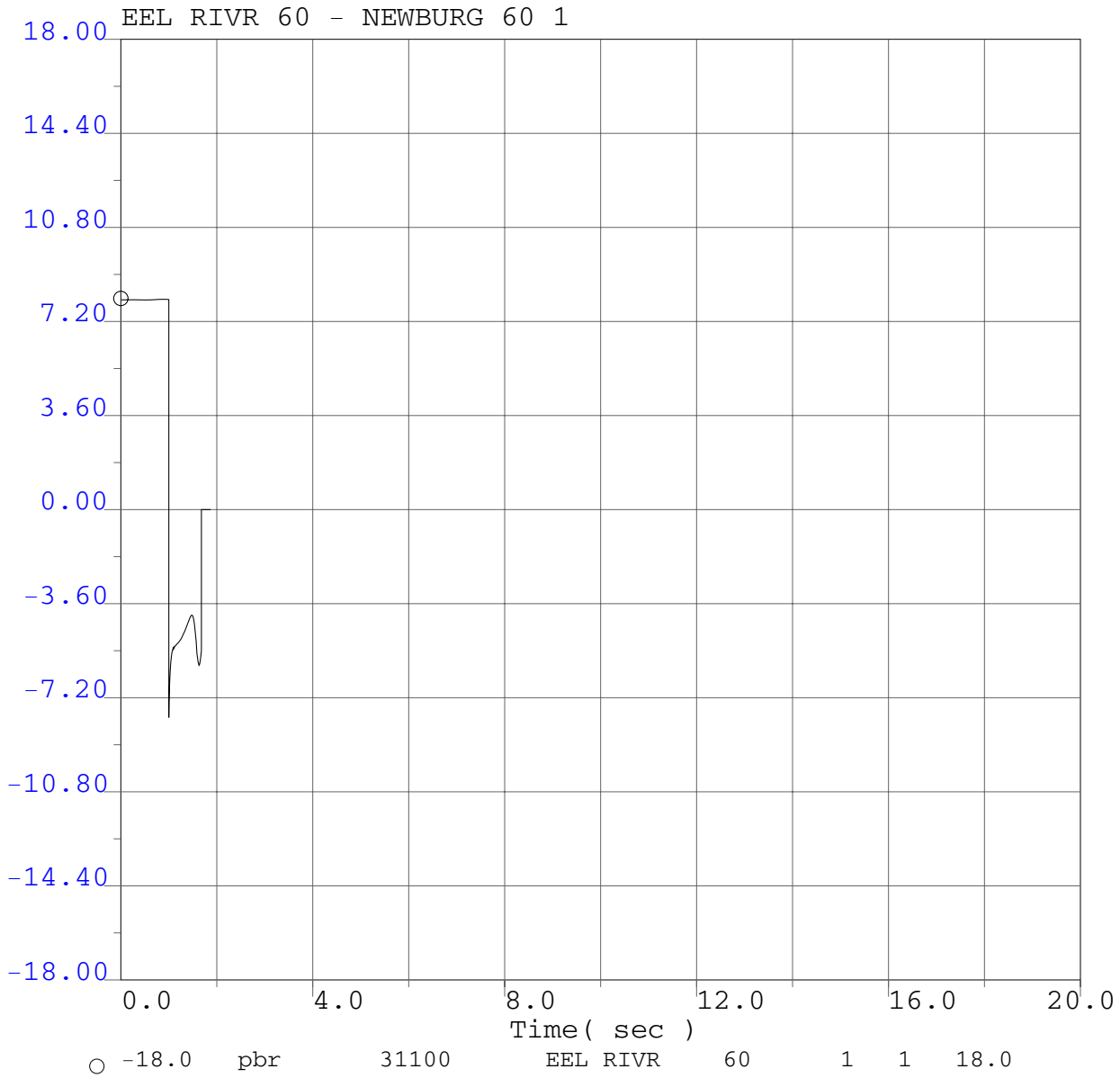

P0411 Project System Impact Study
2008 Summer Peak Base Case
P0411 @ 166.4MW
Humboldt Bay PP - Rio Dell 60kV line outage
3 ph 6 cyc flt @ Humboldt Bay PP 60kV bus & clr HBay-Rio Dell 60kV line @ 40.8

P0411 Project System Impact Study

Selected PG&E Transmission Line Flows (MW)

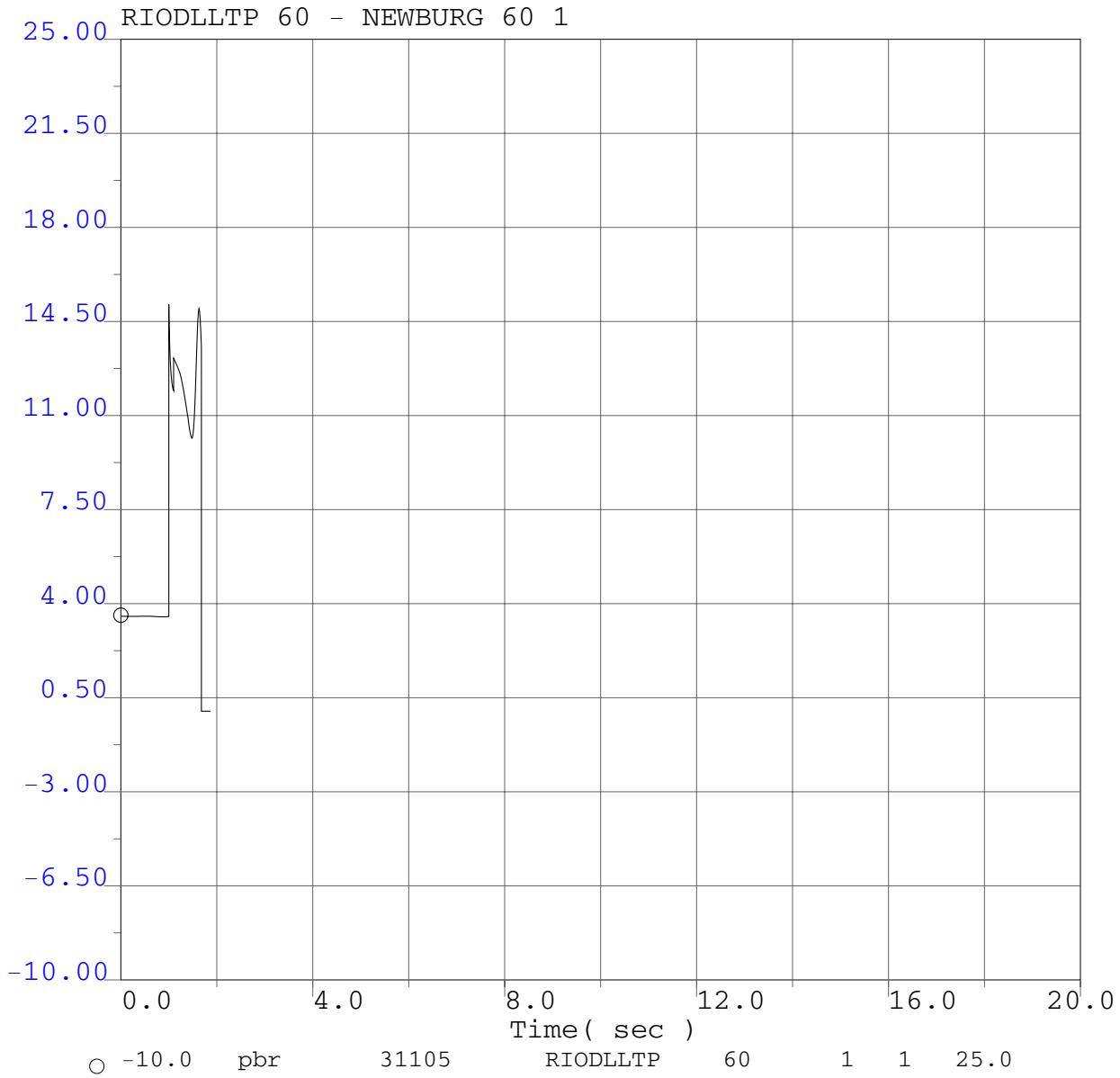

P0411 Project System Impact Study
2008 Summer Peak Base Case
P0411 @ 166.4MW
Humboldt Bay PP - Rio Dell 60kV line outage
3 ph 6 cyc flt @ Humboldt Bay PP 60kV bus & clr HBay-Rio Dell 60kV line @ 40.8

P0411 Project System Impact Study

Selected PG&E Transmission Line Flows (MW)

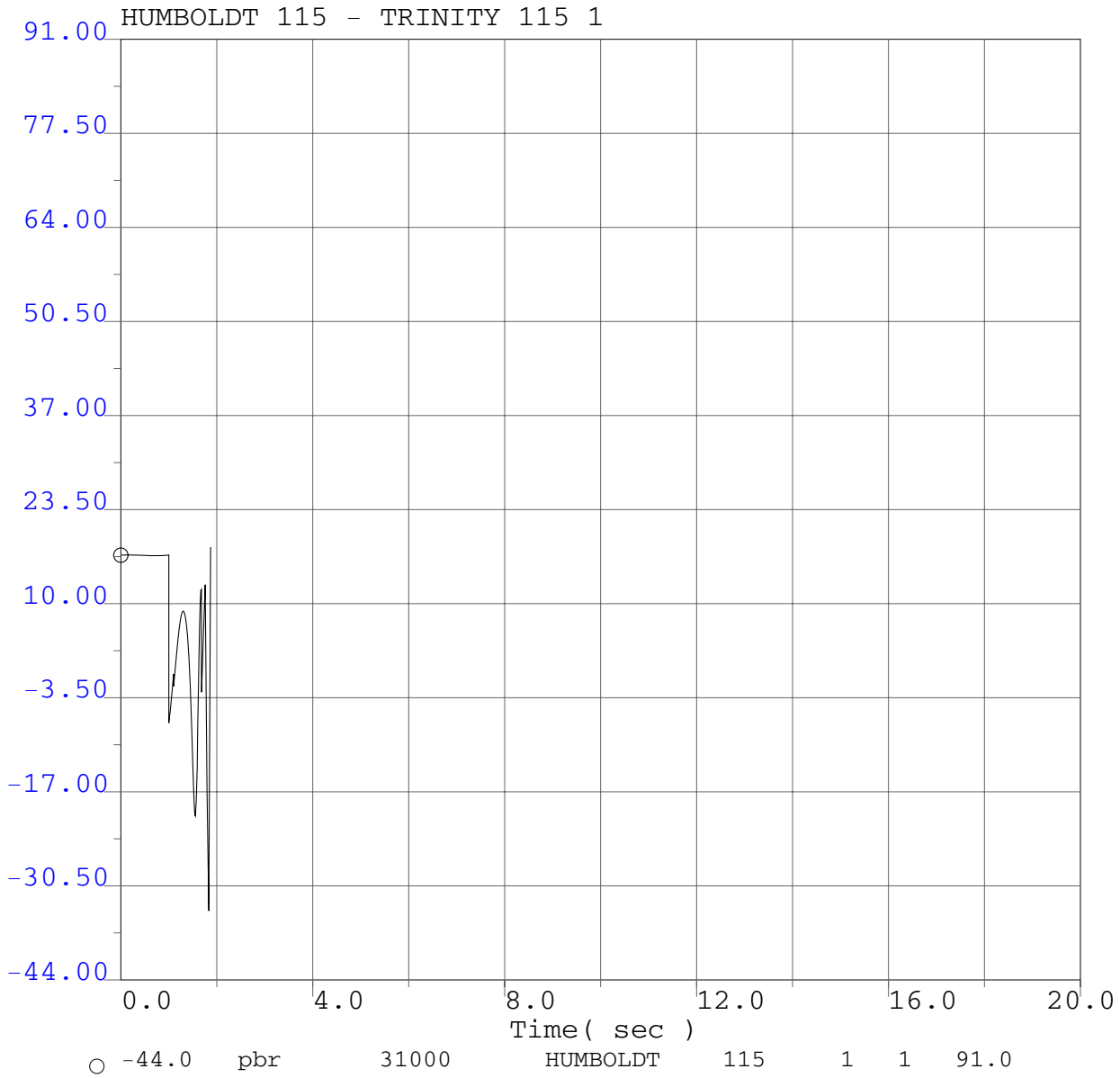

P0411 Project System Impact Study
2008 Summer Peak Base Case
P0411 @ 166.4MW
Humboldt Bay PP - Rio Dell 60kV line outage
3 ph 6 cyc flt @ Humboldt Bay PP 60kV bus & clr HBay-Rio Dell 60kV line @ 40.8

P0411 Project System Impact Study

Selected PG&E Transmission Line Flows (MW)

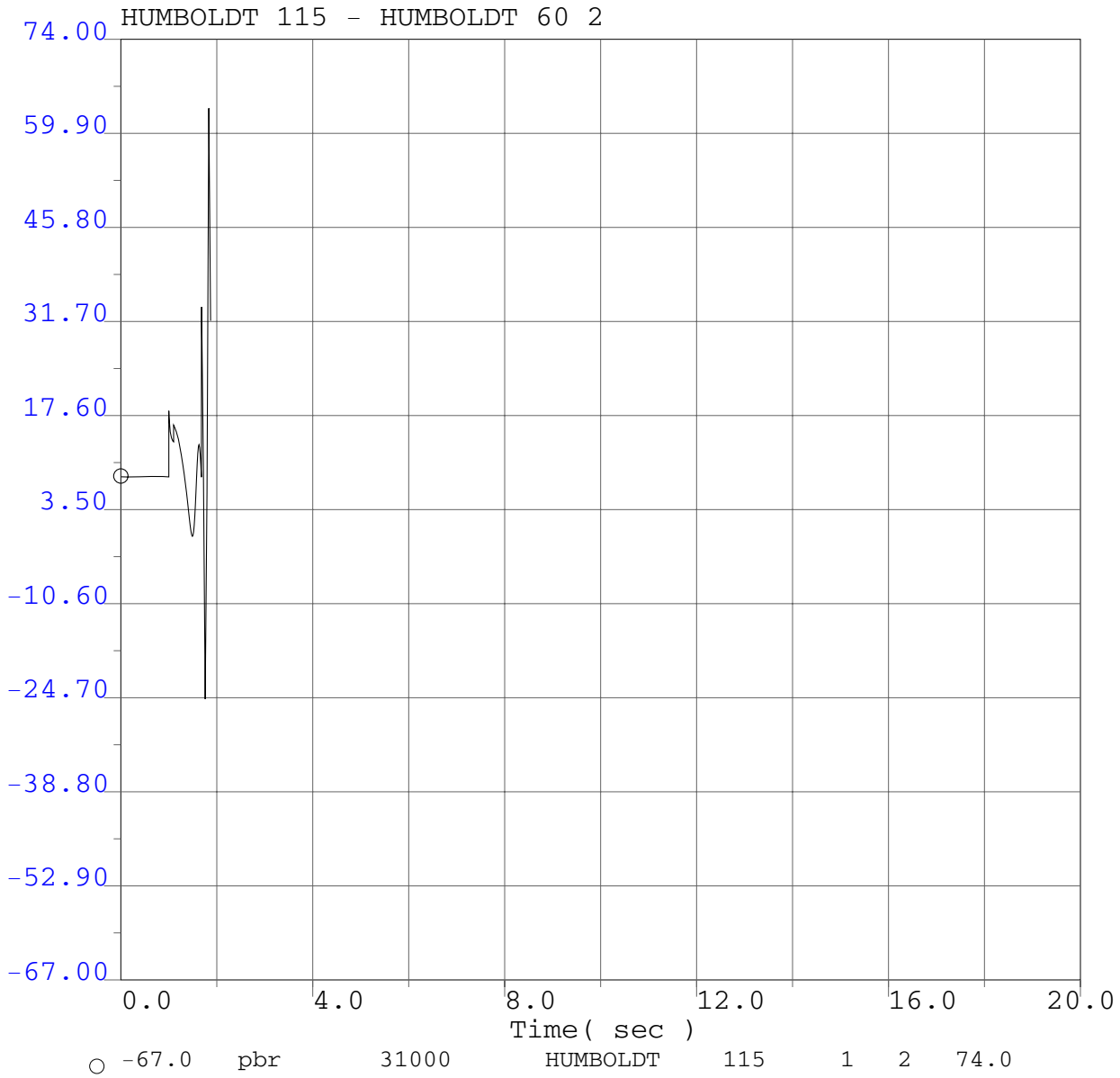

P0411 Project System Impact Study
2008 Summer Peak Base Case
P0411 @ 166.4MW
Humboldt Bay PP - Rio Dell 60kV line outage
3 ph 6 cyc flt @ Humboldt Bay PP 60kV bus & clr HBay-Rio Dell 60kV line @ 40.8

P0411 Project System Impact Study

Selected PG&E Transmission Line Flows (MW)

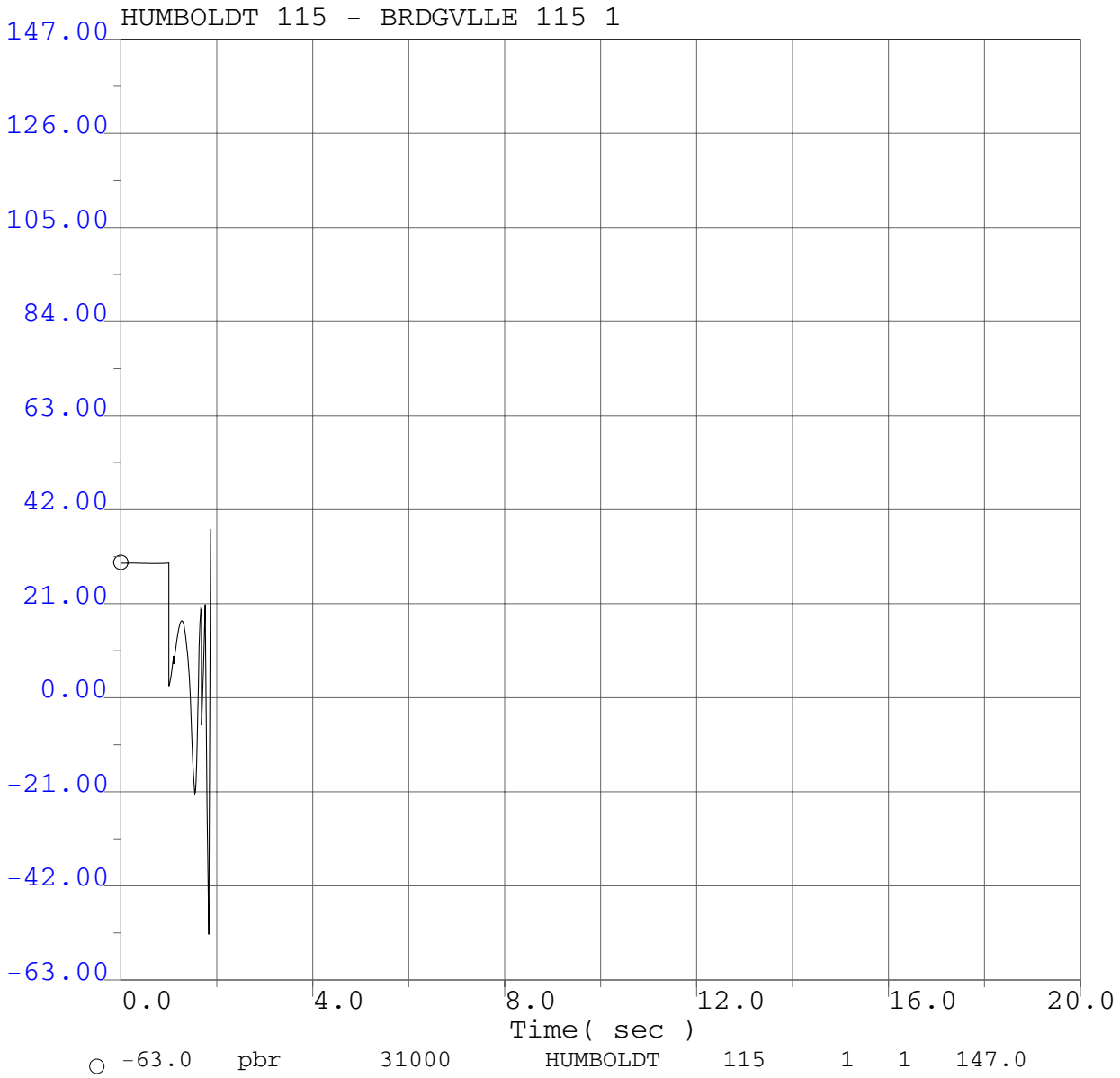

P0411 Project System Impact Study
2008 Summer Peak Base Case
P0411 @ 166.4MW
Humboldt Bay PP - Rio Dell 60kV line outage
3 ph 6 cyc flt @ Humboldt Bay PP 60kV bus & clr HBay-Rio Dell 60kV line @ 40.8

P0411 Project System Impact Study

Selected PG&E Transmission Line Flows (MW)

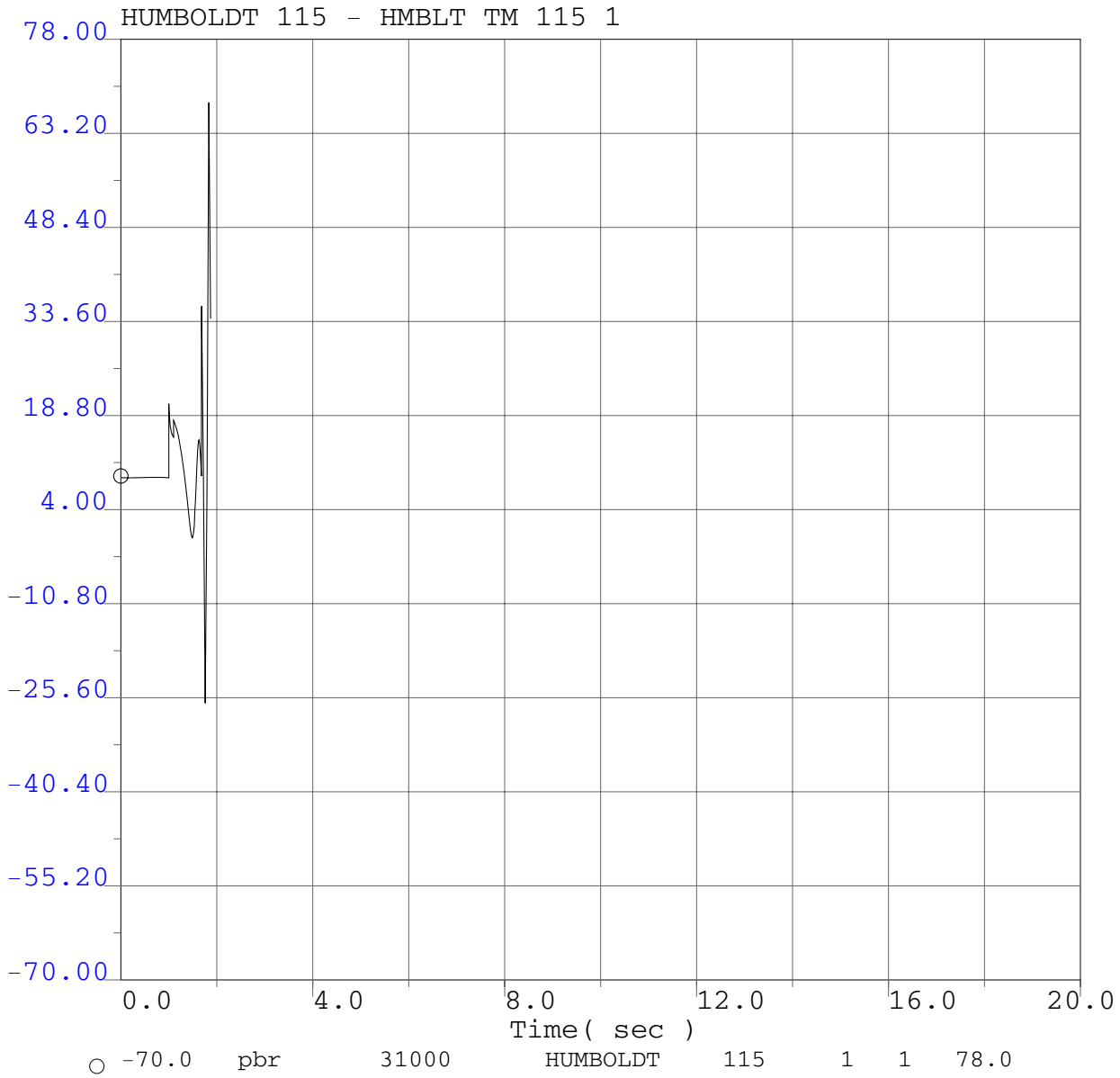

P0411 Project System Impact Study
2008 Summer Peak Base Case
P0411 @ 166.4MW
Humboldt Bay PP - Rio Dell 60kV line outage
3 ph 6 cyc flt @ Humboldt Bay PP 60kV bus & clr HBay-Rio Dell 60kV line @ 40.8

P0411 Project System Impact Study

Selected PG&E Bus Voltage Plots Adjacent to Fault

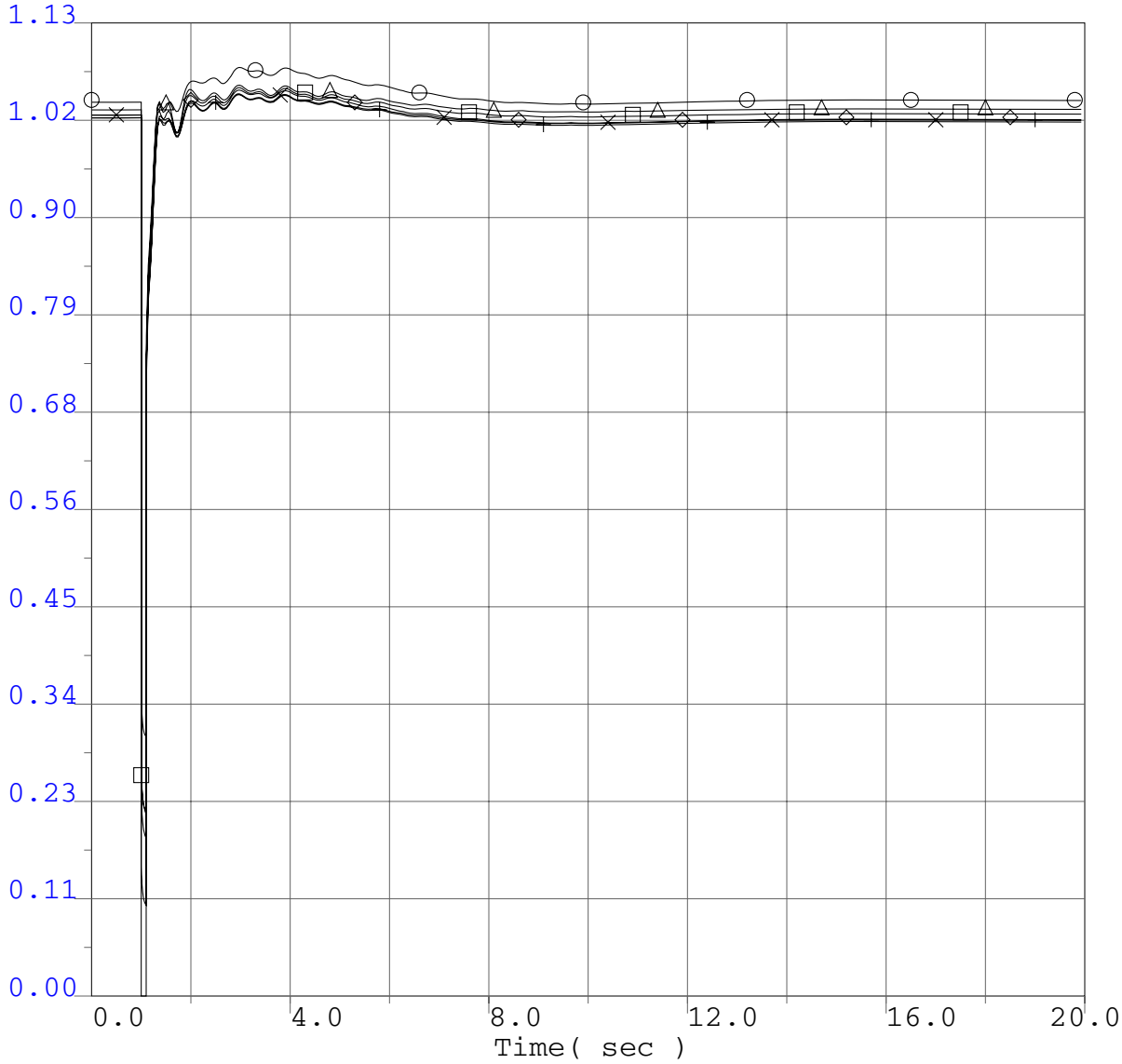

○	0.0	vbul	31090	HMBLT BY	60.0	"*"	1	1.13
×	0.0	vbus	31080	HUMBOLDT	60.0	"*"	1	1.13
□	0.0	vbul	31102	NEWBURG	60.0	"*"	1	1.13
△	0.0	vbus	31105	RIODLLTP	60.0	"*"	1	1.13
◇	0.0	vbul	31086	EUREKA	60.0	"*"	1	1.13
+	0.0	vbul	31082	HARRIS	60.0	"*"	1	1.13

P0411 Project System Impact Study
2008 Summer Peak Base Case
P0411 @ 166.4MW
Humboldt Bay PP - Bumboldt #1 60kV line outage
3 ph 6 cyc flt @ Humboldt Bay PP 60kV bus & clr HBay-Humb #1 60kV line

P0411 Project System Impact Study

Selected PG&E Bus Frequency Plots Adjacent to Fault

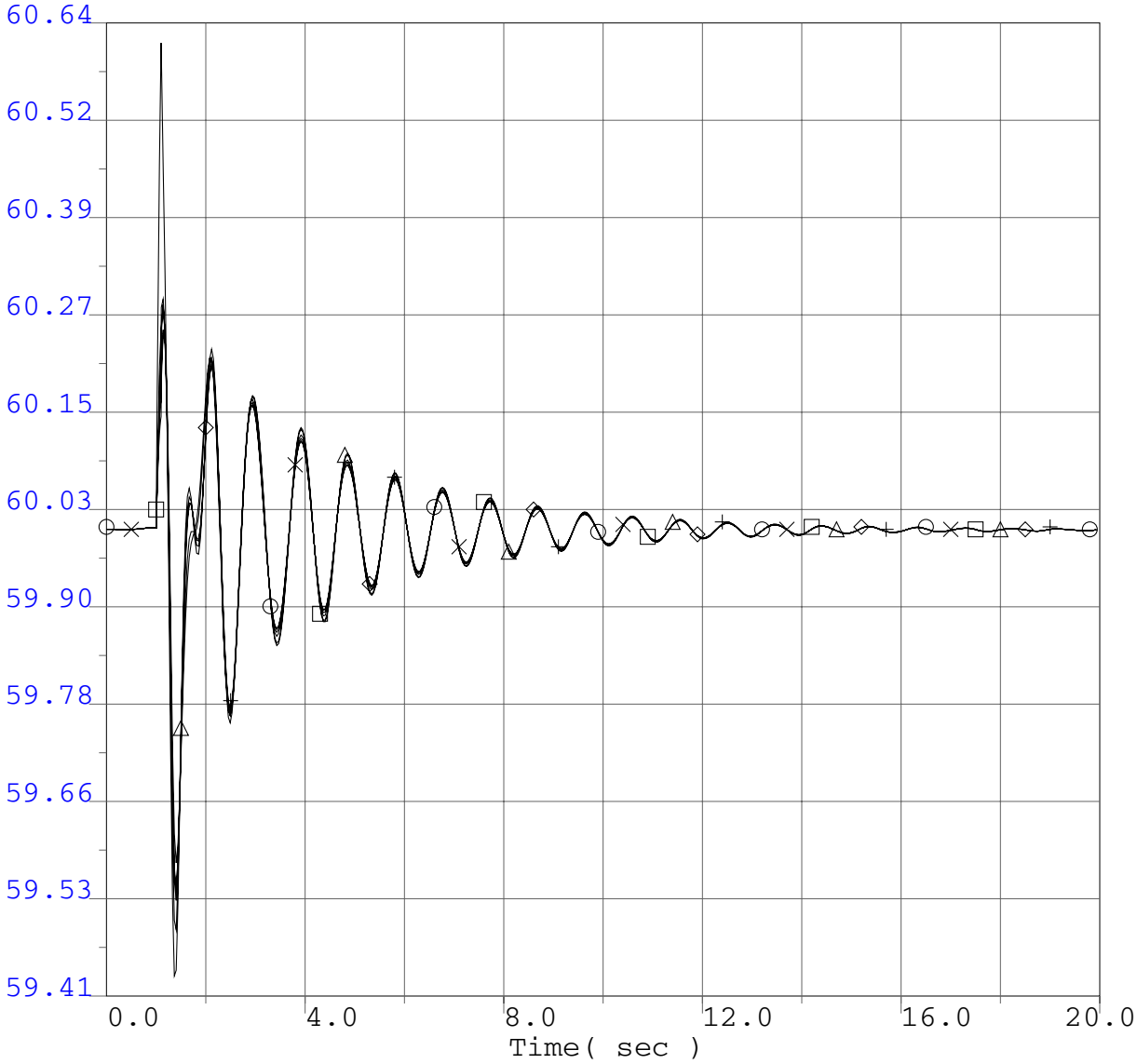

○	59.41	fbul	31090	HMBLT BY	60.0	"*" 1	60.64
×	59.41	fbus	31080	HUMBOLDT	60.0	"*" 1	60.64
□	59.41	fbul	31102	NEWBURG	60.0	"*" 1	60.64
△	59.41	fbus	31105	RIODLLTP	60.0	"*" 1	60.64
◇	59.41	fbul	31086	EUREKA	60.0	"*" 1	60.64
+	59.41	fbul	31082	HARRIS	60.0	"*" 1	60.64

P0411 Project System Impact Study
2008 Summer Peak Base Case
P0411 @ 166.4MW
Humboldt Bay PP - Bumboldt #1 60kV line outage
3 ph 6 cyc flt @ Humboldt Bay PP 60kV bus & clr HBay-Humb #1 60kV line

P0411 Project System Impact Study

Project Generator Terminal Voltages

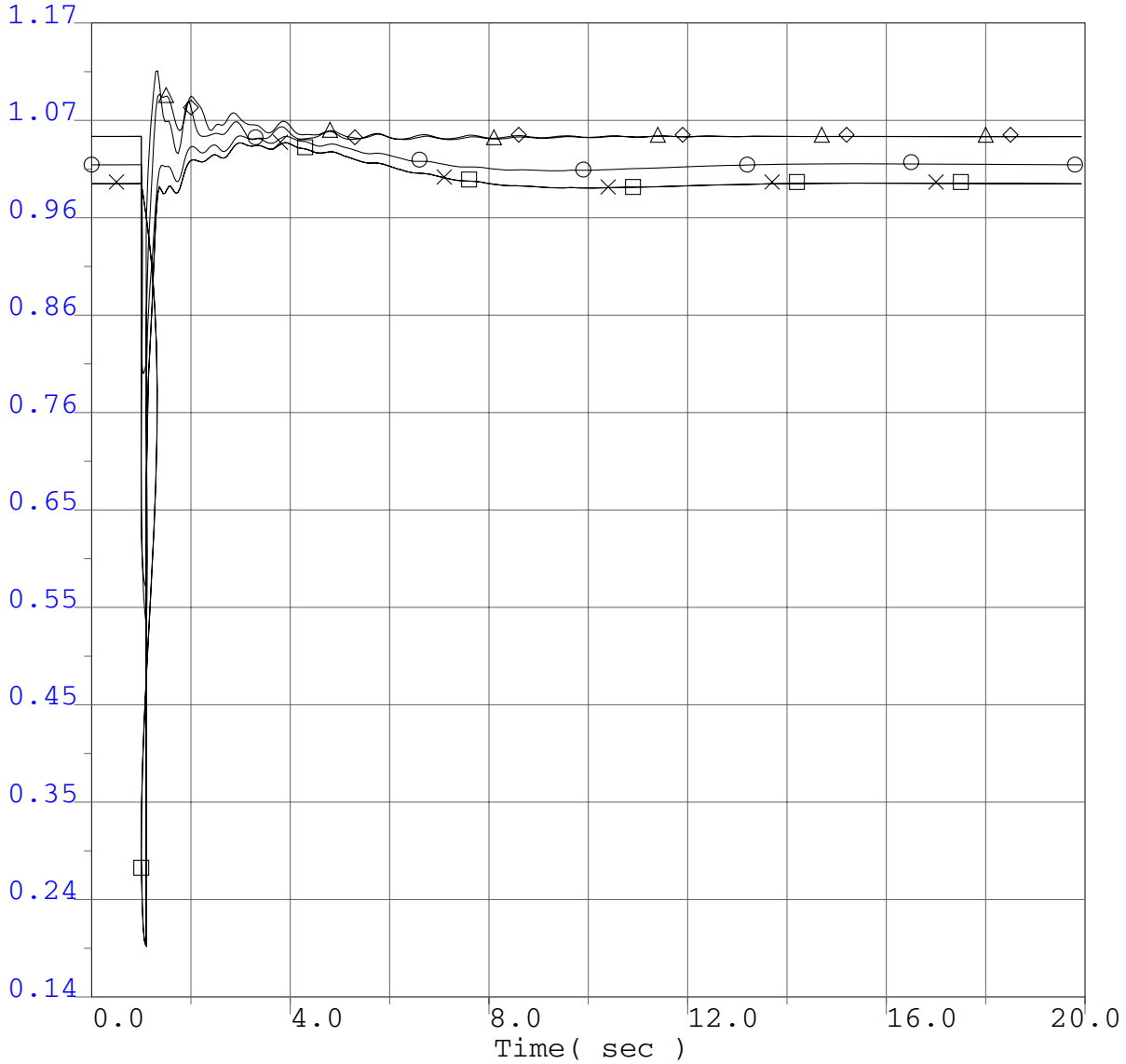

○	0.14	vt	31180	P0411G1	13.8	"1" 1	1.17
×	0.14	vt	31181	P0411G2	13.8	"5" 1	1.17
□	0.14	vt	31182	P0411G3	13.8	"8" 1	1.17
△	0.14	vt	31150	FAIRHAVN	13.8	"1" 1	1.17
◇	0.14	vt	31158	LP SAMOA	12.5	"1" 1	1.17

P0411 Project System Impact Study
2008 Summer Peak Base Case
P0411 @ 166.4MW
Humboldt Bay PP - Bumboldt #1 60kV line outage
3 ph 6 cyc flt @ Humboldt Bay PP 60kV bus & clr HBay-Humb #1 60kV line

P0411 Project System Impact Study

Project Generator Rotor Speed

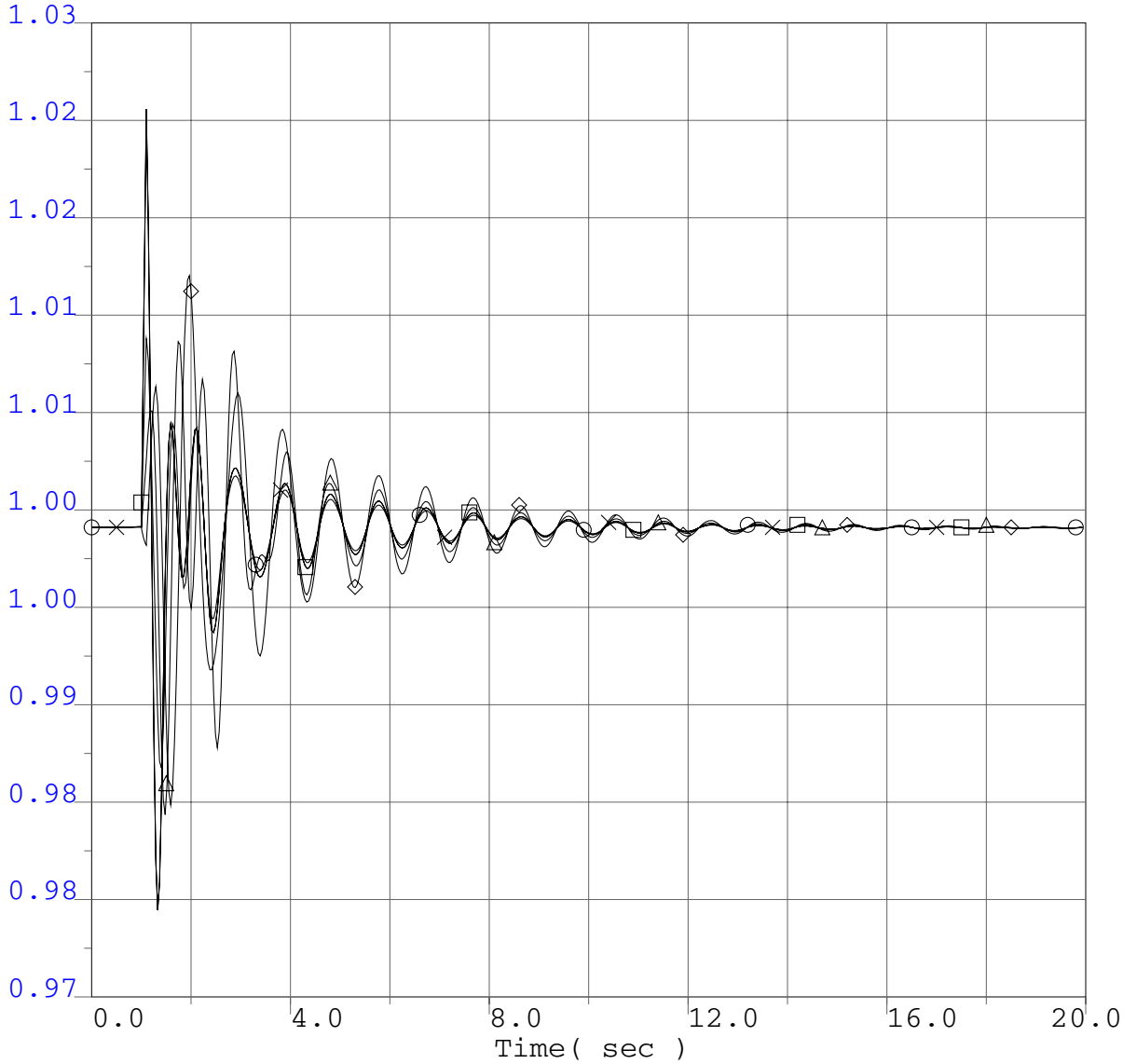

○	0.9731	spd	31180	P0411G1	13.8	"1" 1	1.0289
×	0.9731	spd	31181	P0411G2	13.8	"5" 1	1.0289
□	0.9731	spd	31182	P0411G3	13.8	"8" 1	1.0289
△	0.9731	spd	31150	FAIRHAVN	13.8	"1" 1	1.0289
◇	0.9731	spd	31158	LP SAMOA	12.5	"1" 1	1.0289

P0411 Project System Impact Study
2008 Summer Peak Base Case
P0411 @ 166.4MW
Humboldt Bay PP - Bumboldt #1 60kV line outage
3 ph 6 cyc flt @ Humboldt Bay PP 60kV bus & clr HBay-Humb #1 60kV line

P0411 Project System Impact Study

Project Generator Terminal Power

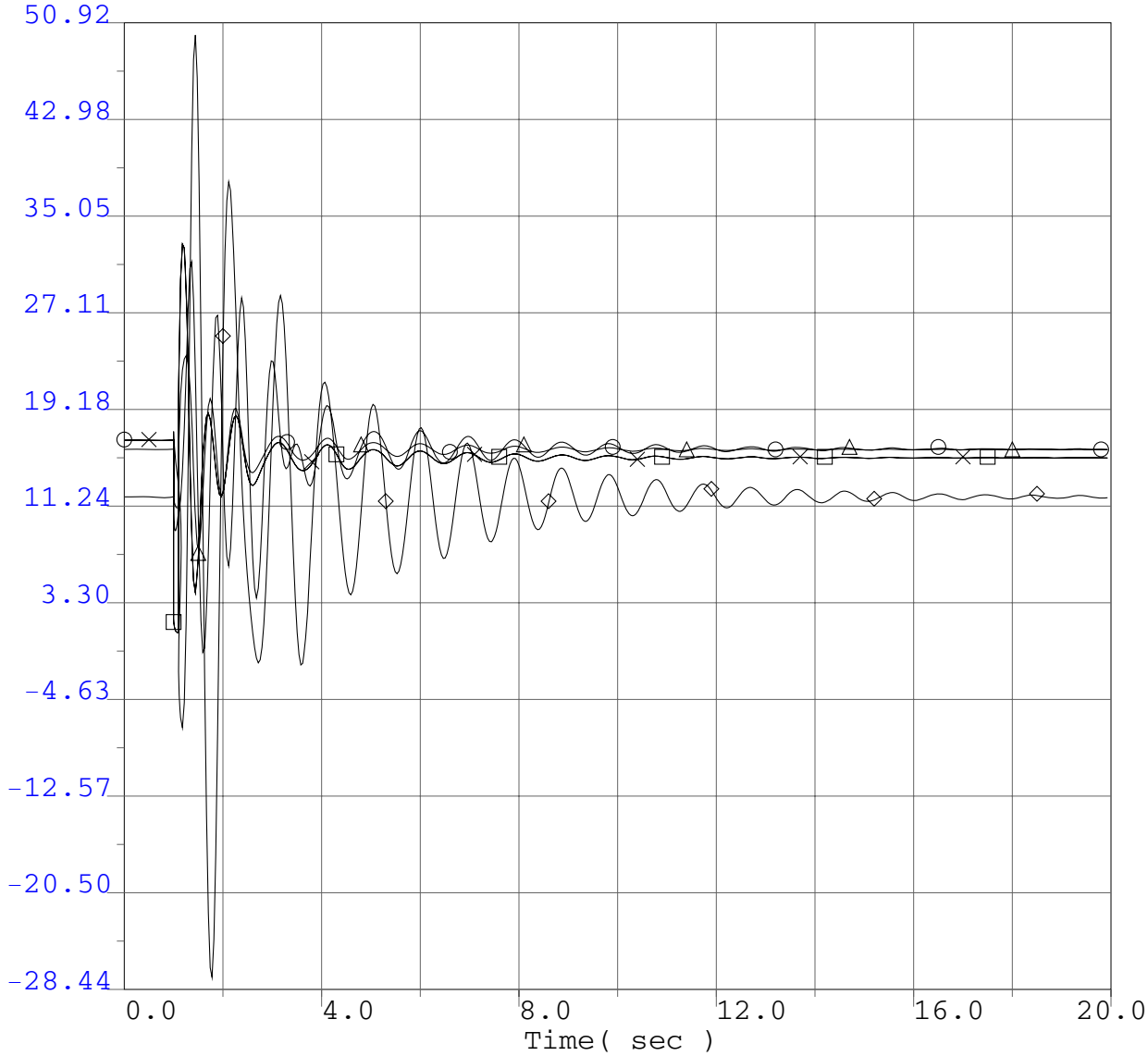

○	-28.44	pg	31180	P0411G1	13.8	"1" 1	50.92
×	-28.44	pg	31181	P0411G2	13.8	"5" 1	50.92
□	-28.44	pg	31182	P0411G3	13.8	"8" 1	50.92
△	-28.44	pg	31150	FAIRHAVN	13.8	"1" 1	50.92
◇	-28.44	pg	31158	LP SAMOA	12.5	"1" 1	50.92

P0411 Project System Impact Study
2008 Summer Peak Base Case
P0411 @ 166.4MW
Humboldt Bay PP - Bumboldt #1 60kV line outage
3 ph 6 cyc flt @ Humboldt Bay PP 60kV bus & clr HBay-Humb #1 60kV line

P0411 Project System Impact Study

Project Generator Terminal Reactive Power

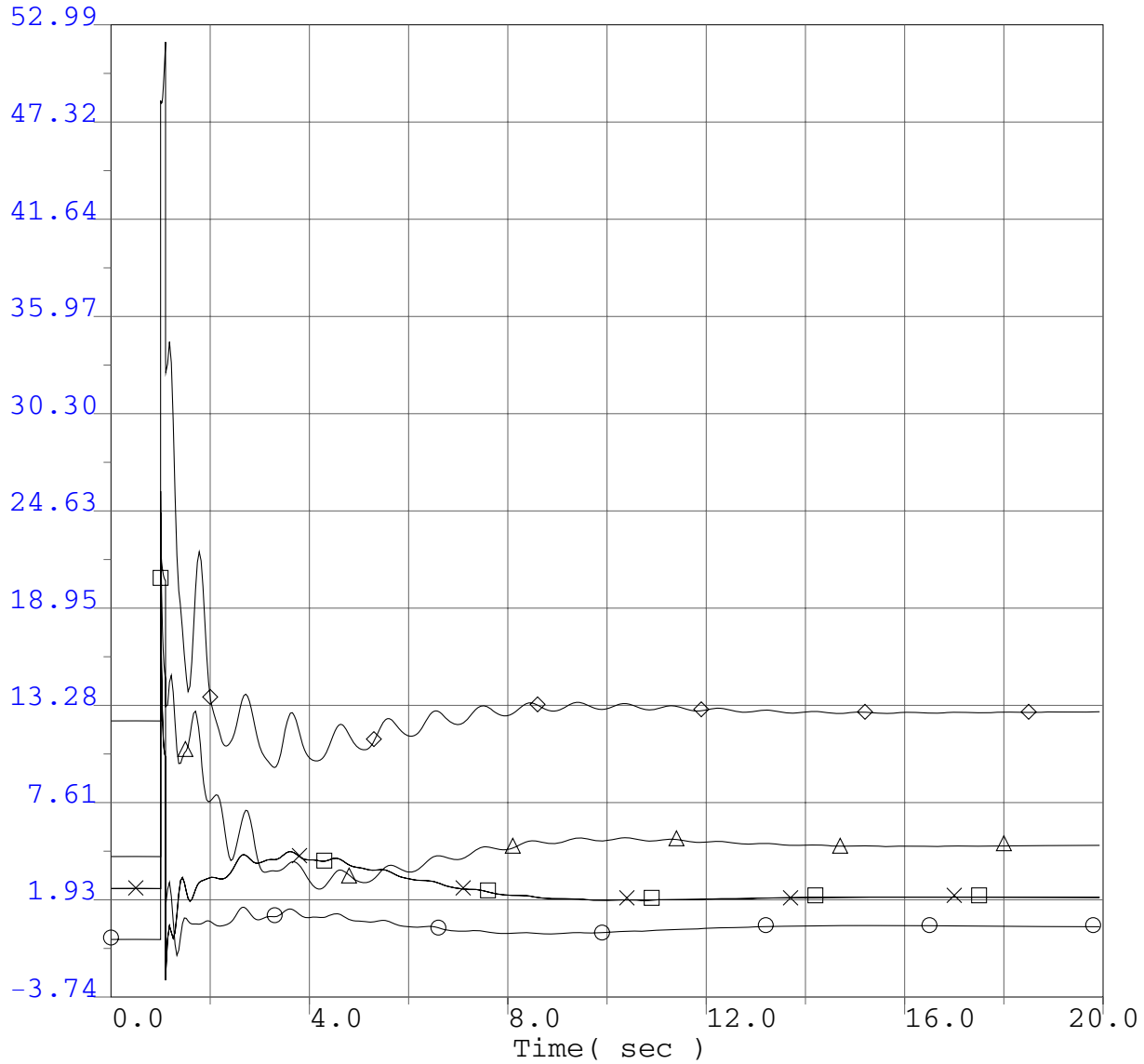

○	-3.74	qg	31180	P0411G1	13.8	"1" 1	52.99
×	-3.74	qg	31181	P0411G2	13.8	"5" 1	52.99
□	-3.74	qg	31182	P0411G3	13.8	"8" 1	52.99
△	-3.74	qg	31150	FAIRHAVN	13.8	"1" 1	52.99
◇	-3.74	qg	31158	LP SAMOA	12.5	"1" 1	52.99

P0411 Project System Impact Study
2008 Summer Peak Base Case
P0411 @ 166.4MW
Humboldt Bay PP - Bumboldt #1 60kV line outage
3 ph 6 cyc flt @ Humboldt Bay PP 60kV bus & clr HBay-Humb #1 60kV line

P0411 Project System Impact Study

Selected WECC Bus Voltage Plots

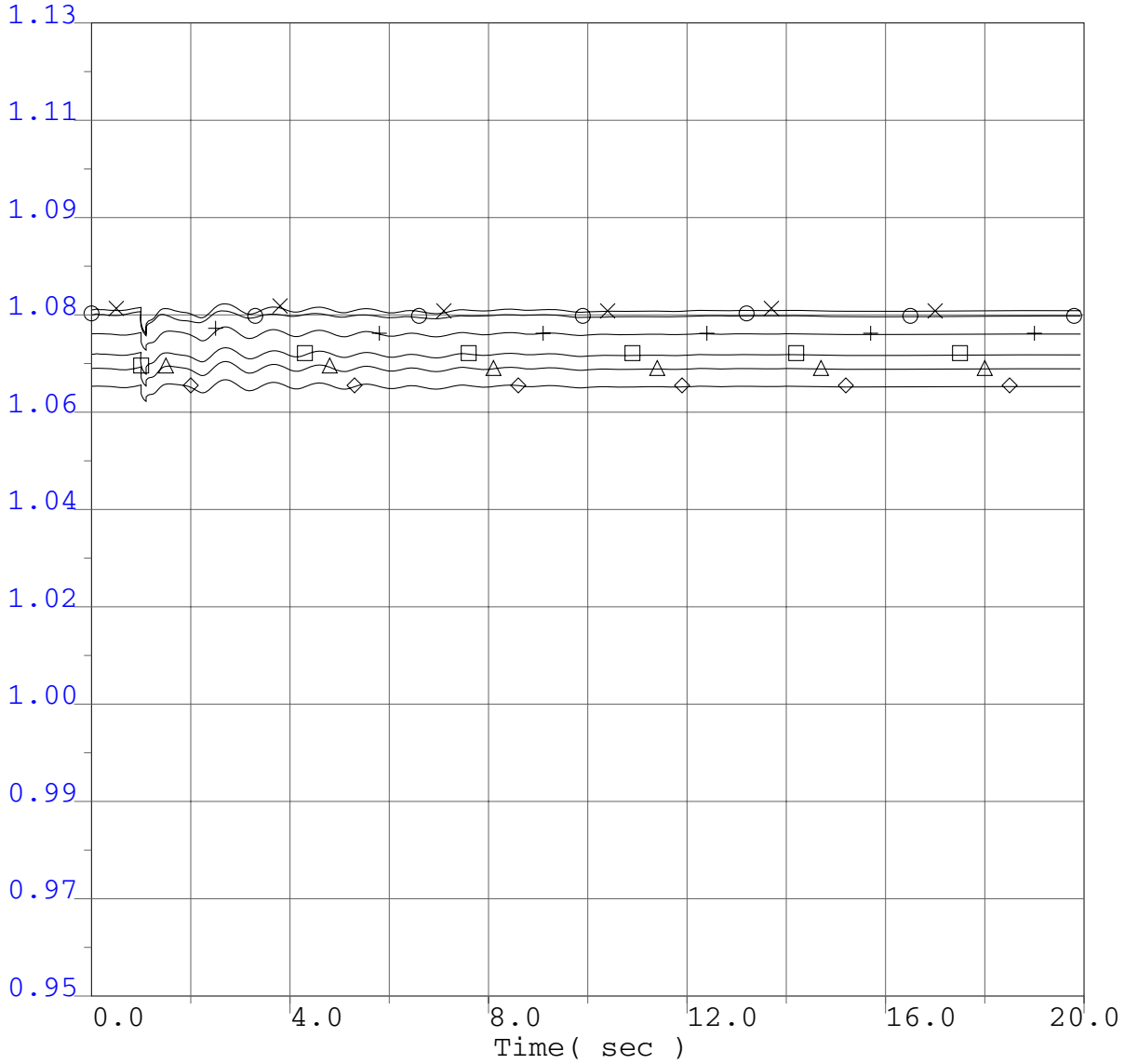

○ 0.95	vbus	40687	MALIN	500.0	"*" 1	1.13
× 0.95	vbus	30005	ROUND MT	500.0	"*" 1	1.13
□ 0.95	vbus	30015	TABLE MT	500.0	"*" 1	1.13
△ 0.95	vbus	30030	VACA-DIX	500.0	"*" 1	1.13
◇ 0.95	vbus	30040	TESLA	500.0	"*" 1	1.13
+ 0.95	vbus	30035	TRACY	500.0	"*" 1	1.13

P0411 Project System Impact Study
2008 Summer Peak Base Case
P0411 @ 166.4MW
Humboldt Bay PP - Bumboldt #1 60kV line outage
3 ph 6 cyc flt @ Humboldt Bay PP 60kV bus & clr HBay-Humb #1 60kV line

P0411 Project System Impact Study

Selected WECC Bus Voltage Plots

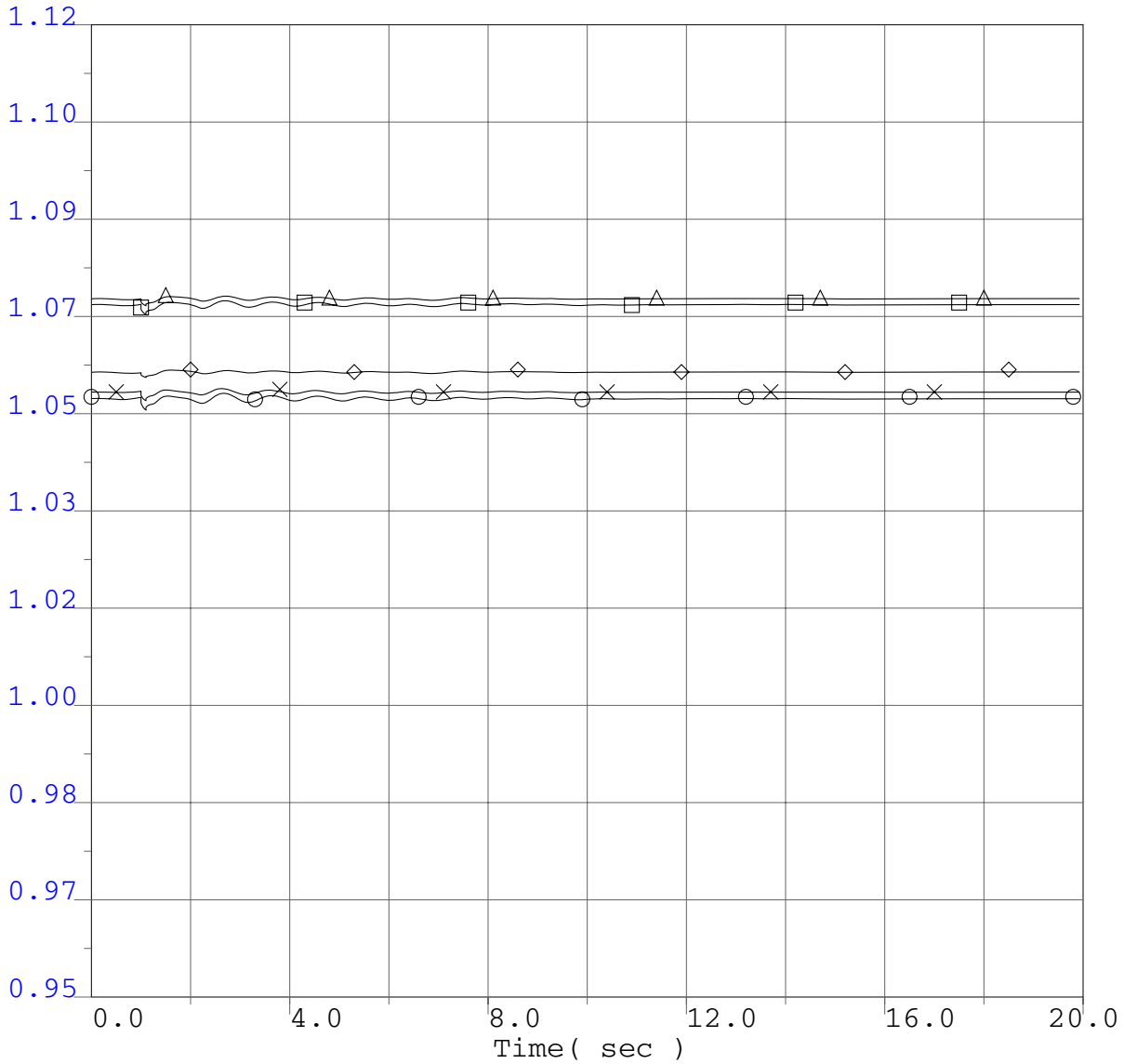

○ 0.95	vbus	30042	METCALF	500.0	"*"	1	1.12
× 0.95	vbus	30045	MOSSLAND	500.0	"*"	1	1.12
□ 0.95	vbus	30050	LOSBANOS	500.0	"*"	1	1.12
△ 0.95	vbus	30055	GATES	500.0	"*"	1	1.12
◇ 0.95	vbus	30060	MIDWAY	500.0	"*"	1	1.12

P0411 Project System Impact Study
2008 Summer Peak Base Case
P0411 @ 166.4MW
Humboldt Bay PP - Bumboldt #1 60kV line outage
3 ph 6 cyc flt @ Humboldt Bay PP 60kV bus & clr HBay-Humb #1 60kV line

P0411 Project System Impact Study

Selected WECC Bus Voltage Plots

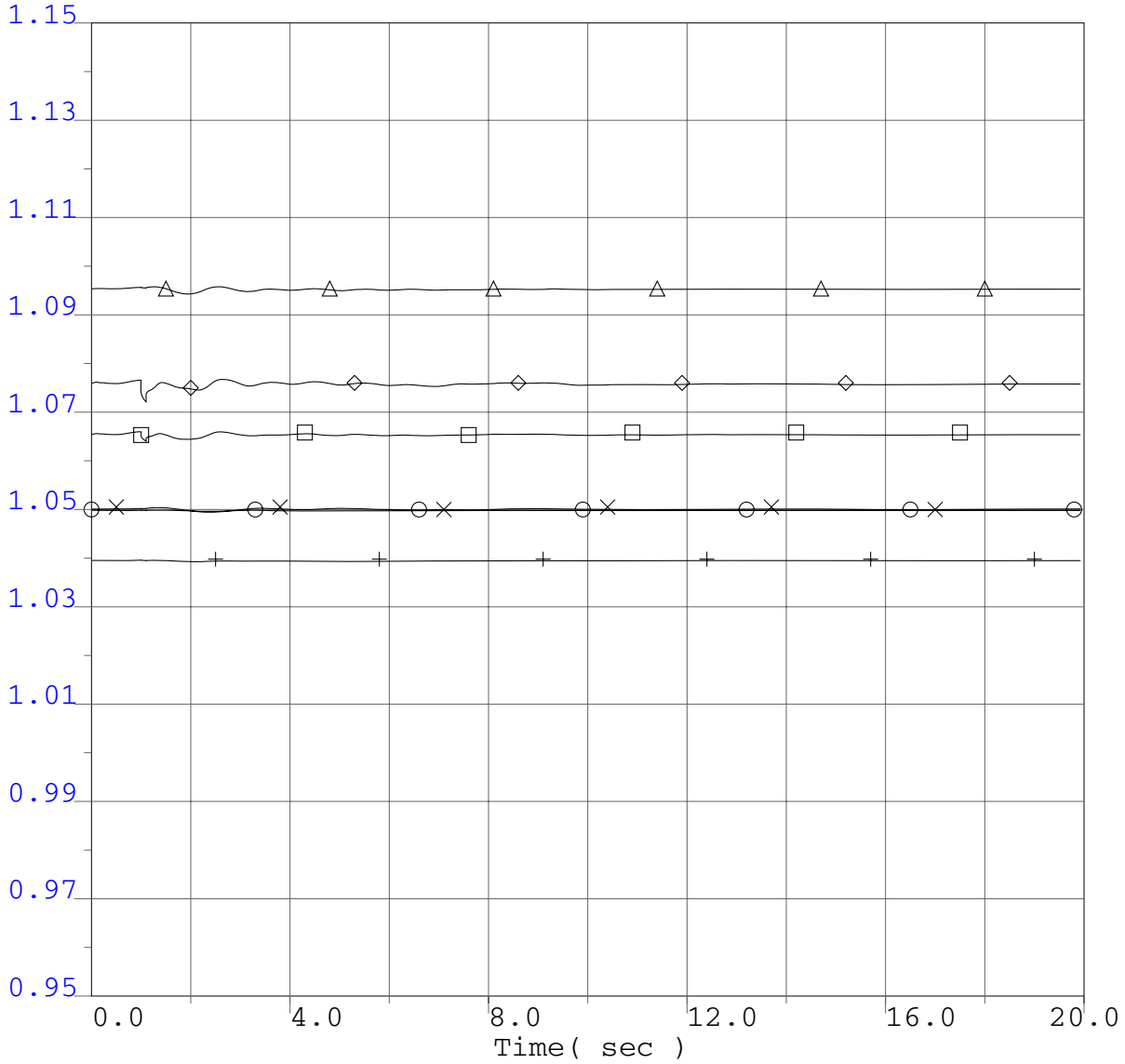

○	0.95	vbus	14001	FOURCORN	500.0	"*"	1	1.15
×	0.95	vbus	50703	NIC500	500.0	"*"	1	1.15
□	0.95	vbus	60240	MIDPOINT	500.0	"*"	1	1.15
△	0.95	vbus	62012	TOWN2	500.0	"*"	1	1.15
◇	0.95	vbus	40687	MALIN	500.0	"*"	1	1.15
+	0.95	vbus	66340	SIGURD	345.0	"*"	1	1.15

P0411 Project System Impact Study
2008 Summer Peak Base Case
P0411 @ 166.4MW
Humboldt Bay PP - Bumboldt #1 60kV line outage
3 ph 6 cyc flt @ Humboldt Bay PP 60kV bus & clr HBay-Humb #1 60kV line

P0411 Project System Impact Study

Selected WECC Bus Voltage Plots

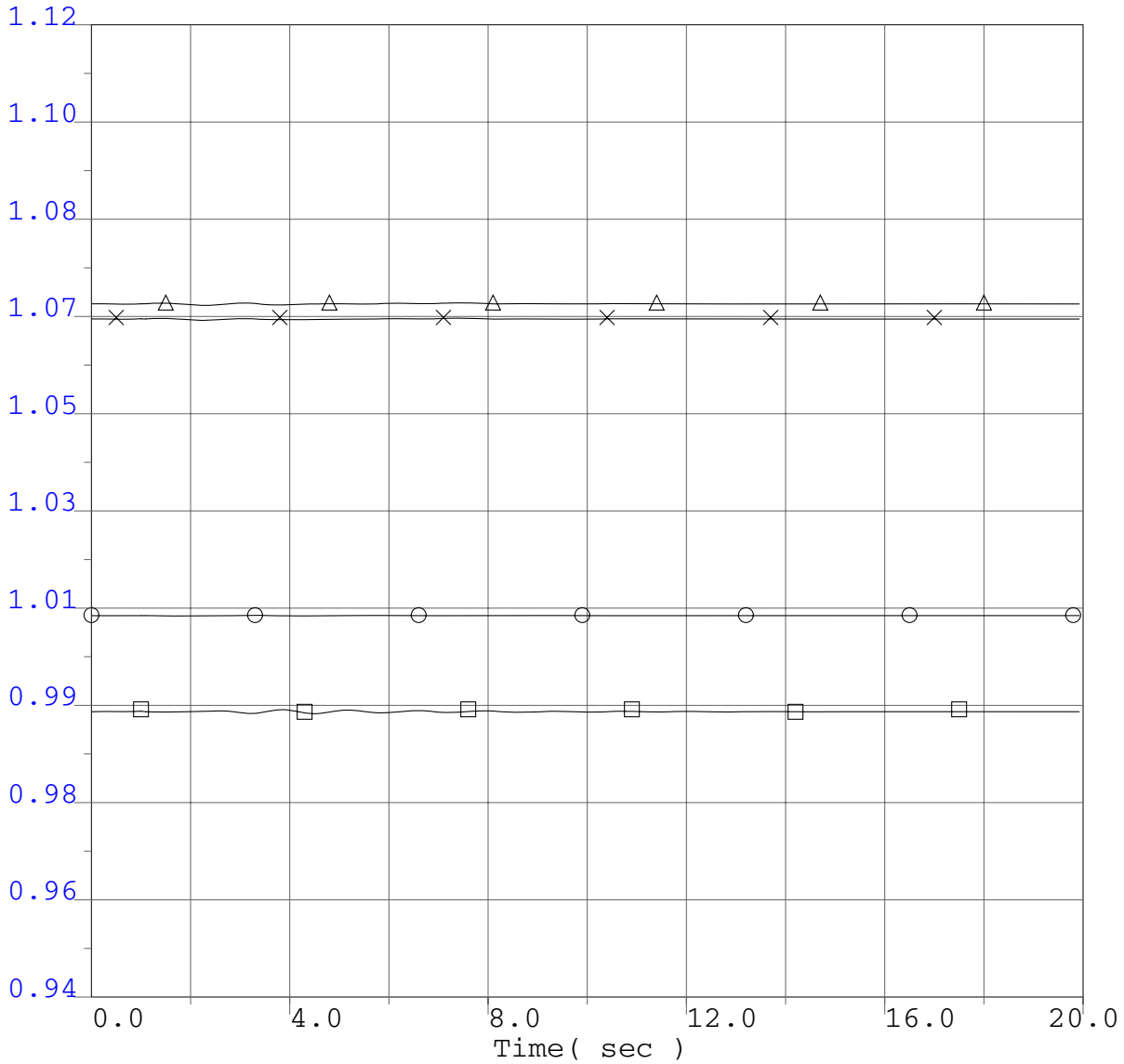

○ 0.94	vbus	54150	LANGDON2	500.0	"*"	1	1.12
× 0.94	vbus	14003	NAVAJO	500.0	"*"	1	1.12
□ 0.94	vbus	24153	VESTAL	230.0	"*"	1	1.12
△ 0.94	vbus	22360	IMPRLVLY	500.0	"*"	1	1.12

P0411 Project System Impact Study
2008 Summer Peak Base Case
P0411 @ 166.4MW
Humboldt Bay PP - Bumboldt #1 60kV line outage
3 ph 6 cyc flt @ Humboldt Bay PP 60kV bus & clr HBay-Humb #1 60kV line

P0411 Project System Impact Study

Selected WECC Bus Frequency Plots

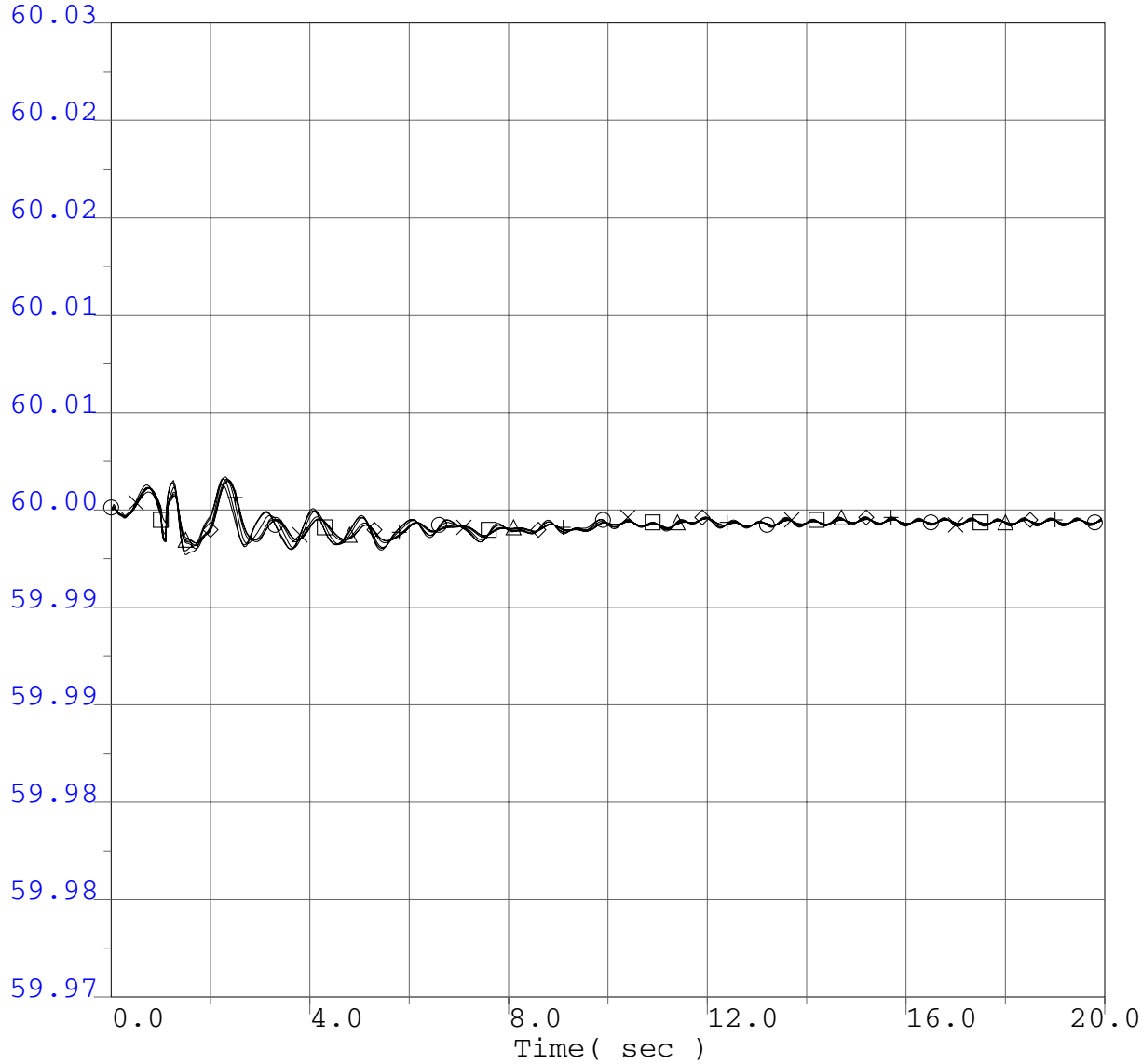

P0411 Project System Impact Study
2008 Summer Peak Base Case
P0411 @ 166.4MW
Humboldt Bay PP - Bumboldt #1 60kV line outage
3 ph 6 cyc flt @ Humboldt Bay PP 60kV bus & clr HBay-Humb #1 60kV line

P0411 Project System Impact Study

Selected WECC Bus Frequency Plots

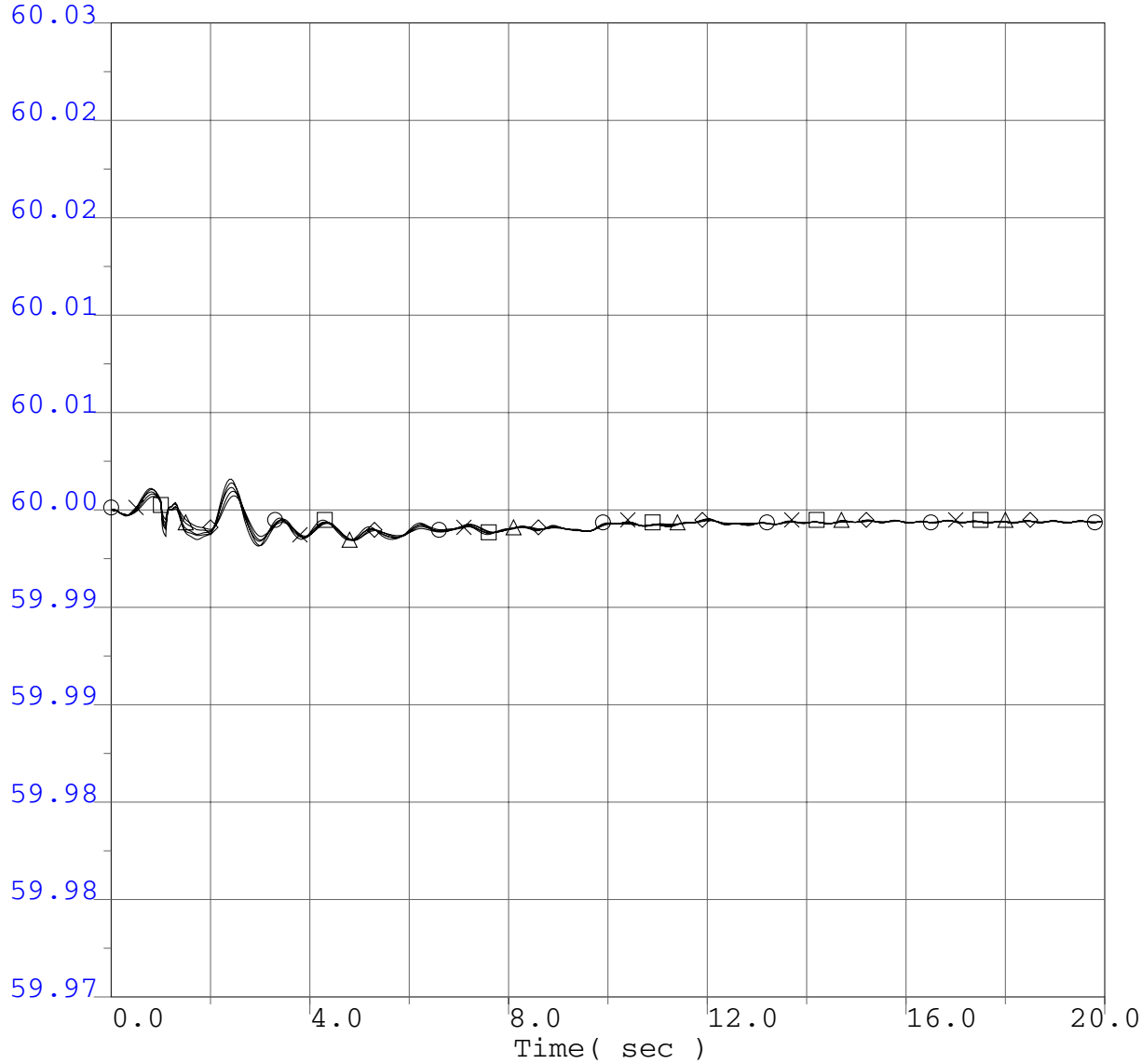

○ 59.97	fbus	30042	METCALF	500.0	"*"	1	60.03
× 59.97	fbus	30045	MOSSLAND	500.0	"*"	1	60.03
□ 59.97	fbus	30050	LOSBANOS	500.0	"*"	1	60.03
△ 59.97	fbus	30055	GATES	500.0	"*"	1	60.03
◇ 59.97	fbus	30060	MIDWAY	500.0	"*"	1	60.03

P0411 Project System Impact Study
2008 Summer Peak Base Case
P0411 @ 166.4MW
Humboldt Bay PP - Bumboldt #1 60kV line outage
3 ph 6 cyc flt @ Humboldt Bay PP 60kV bus & clr HBay-Humb #1 60kV line

P0411 Project System Impact Study

Selected WECC Bus Frequency Plots

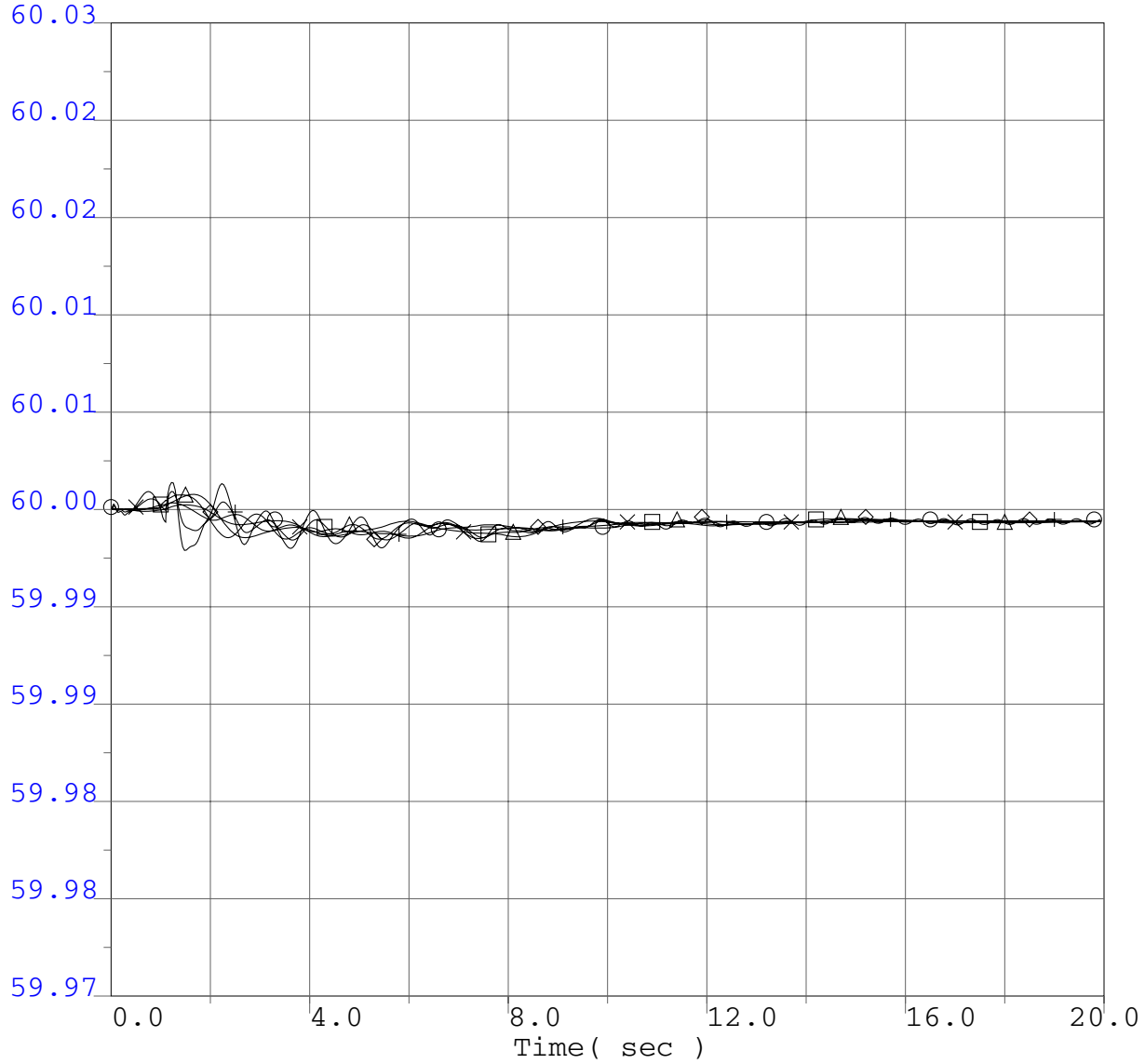

○ 59.97	fbus	14001	FOURCORN	500.0	"*"	1	60.03
× 59.97	fbus	50703	NIC500	500.0	"*"	1	60.03
□ 59.97	fbus	60240	MIDPOINT	500.0	"*"	1	60.03
△ 59.97	fbus	62012	TOWN2	500.0	"*"	1	60.03
◇ 59.97	fbus	40687	MALIN	500.0	"*"	1	60.03
+ 59.97	fbus	66340	SIGURD	345.0	"*"	1	60.03

P0411 Project System Impact Study
2008 Summer Peak Base Case
P0411 @ 166.4MW
Humboldt Bay PP - Bumboldt #1 60kV line outage
3 ph 6 cyc flt @ Humboldt Bay PP 60kV bus & clr HBay-Humb #1 60kV line

P0411 Project System Impact Study

Selected WECC Bus Frequency Plots

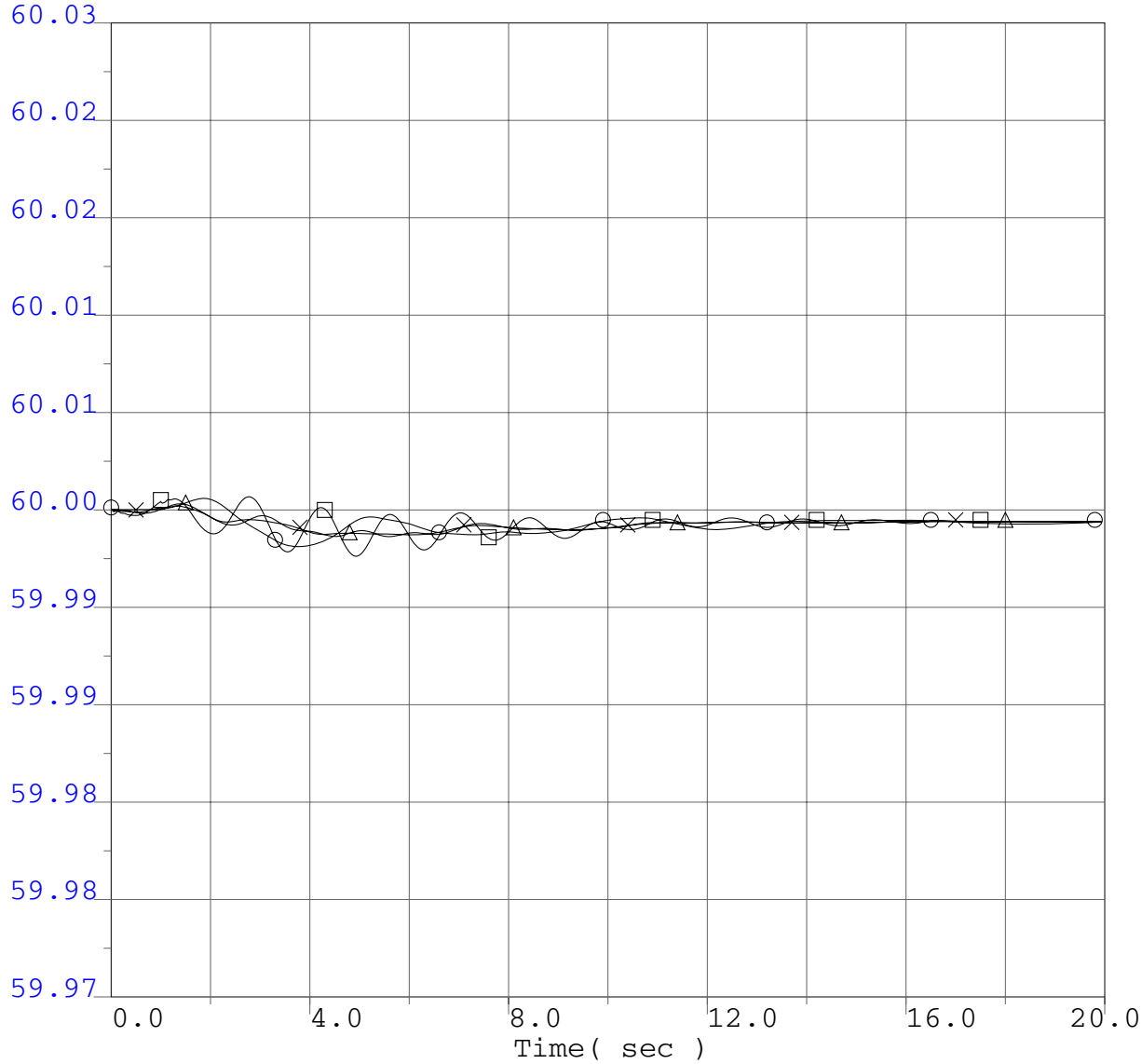

○ 59.97	fbus	54150	LANGDON2	500.0	"*"	1	60.03
× 59.97	fbus	14003	NAVAJO	500.0	"*"	1	60.03
□ 59.97	fbus	24153	VESTAL	230.0	"*"	1	60.03
△ 59.97	fbus	22360	IMPRLVLY	500.0	"*"	1	60.03

P0411 Project System Impact Study
2008 Summer Peak Base Case
P0411 @ 166.4MW
Humboldt Bay PP - Bumboldt #1 60kV line outage
3 ph 6 cyc flt @ Humboldt Bay PP 60kV bus & clr HBay-Humb #1 60kV line

P0411 Project System Impact Study

WECC Generator Rotor Angle

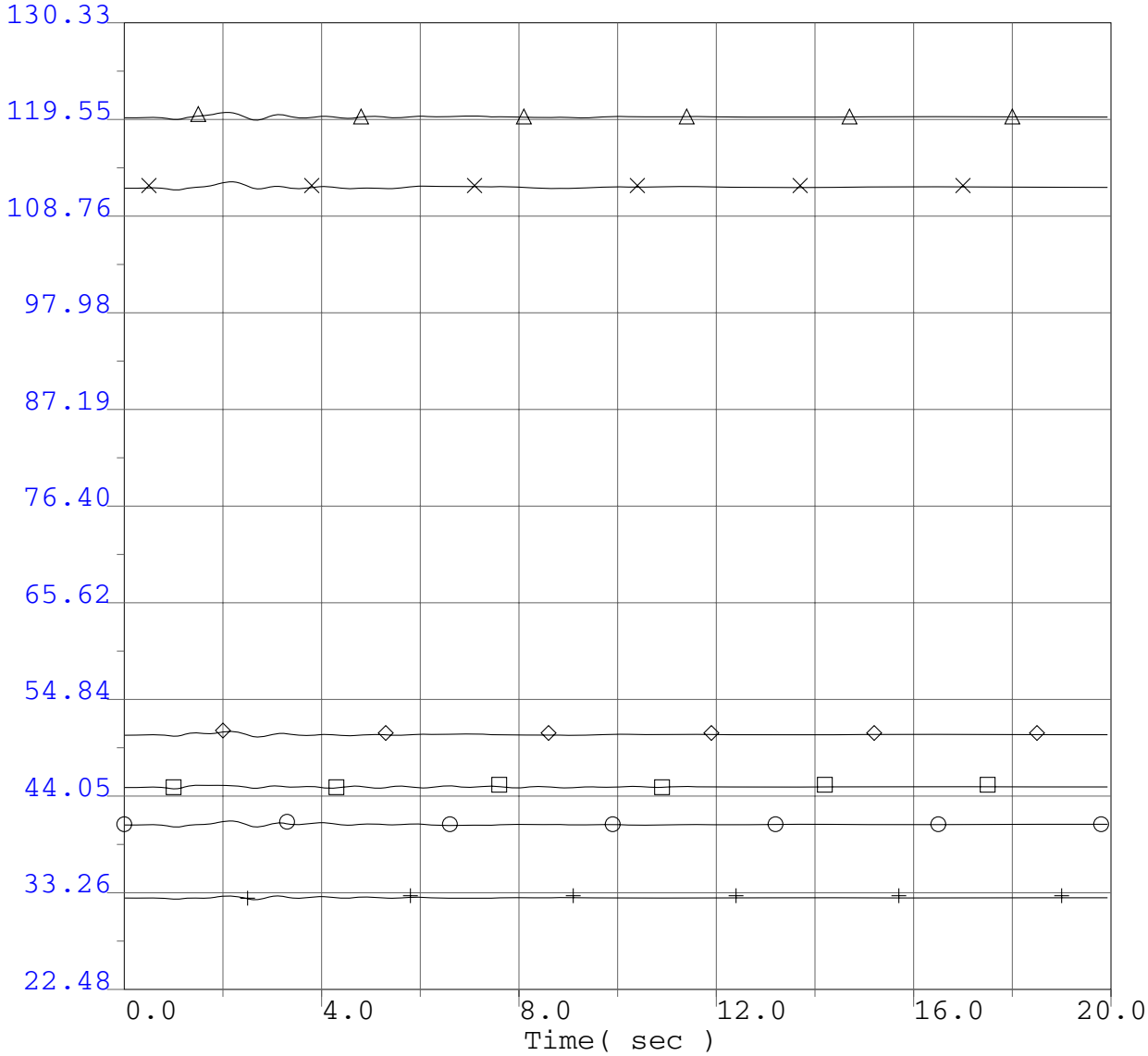

○	22.48	ang	14914	FCNGN4CC	22.0	"H" 1	130.33
×	22.48	ang	50500	GMS G6	13.8	"1" 1	130.33
□	22.48	ang	60100	BRWNL 5	13.8	"1" 1	130.33
△	22.48	ang	62048	COLSTP 3	26.0	"1" 1	130.33
◇	22.48	ang	41701	JONDAY01	13.8	"1" 1	130.33
+	22.48	ang	36411	DIABLO 1	25.0	"1" 1	130.33

P0411 Project System Impact Study
2008 Summer Peak Base Case
P0411 @ 166.4MW
Humboldt Bay PP - Bumboldt #1 60kV line outage
3 ph 6 cyc flt @ Humboldt Bay PP 60kV bus & clr HBay-Humb #1 60kV line

P0411 Project System Impact Study

WECC Generator Rotor Angle

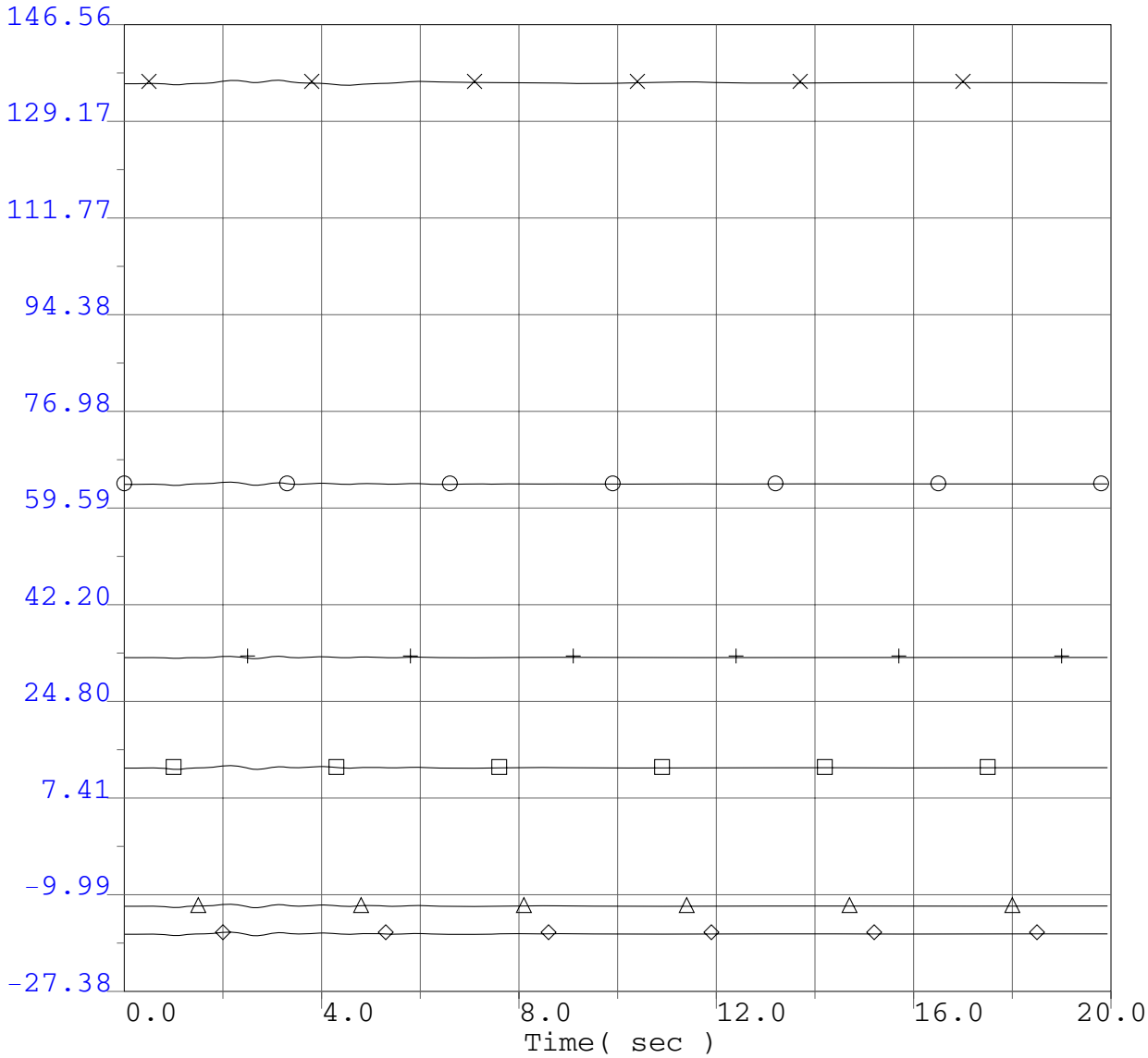

P0411 Project System Impact Study
2008 Summer Peak Base Case
P0411 @ 166.4MW
Humboldt Bay PP - Bumboldt #1 60kV line outage
3 ph 6 cyc flt @ Humboldt Bay PP 60kV bus & clr HBay-Humb #1 60kV line

P0411 Project System Impact Study

Selected PG&E Transmission Line Flows (MW)

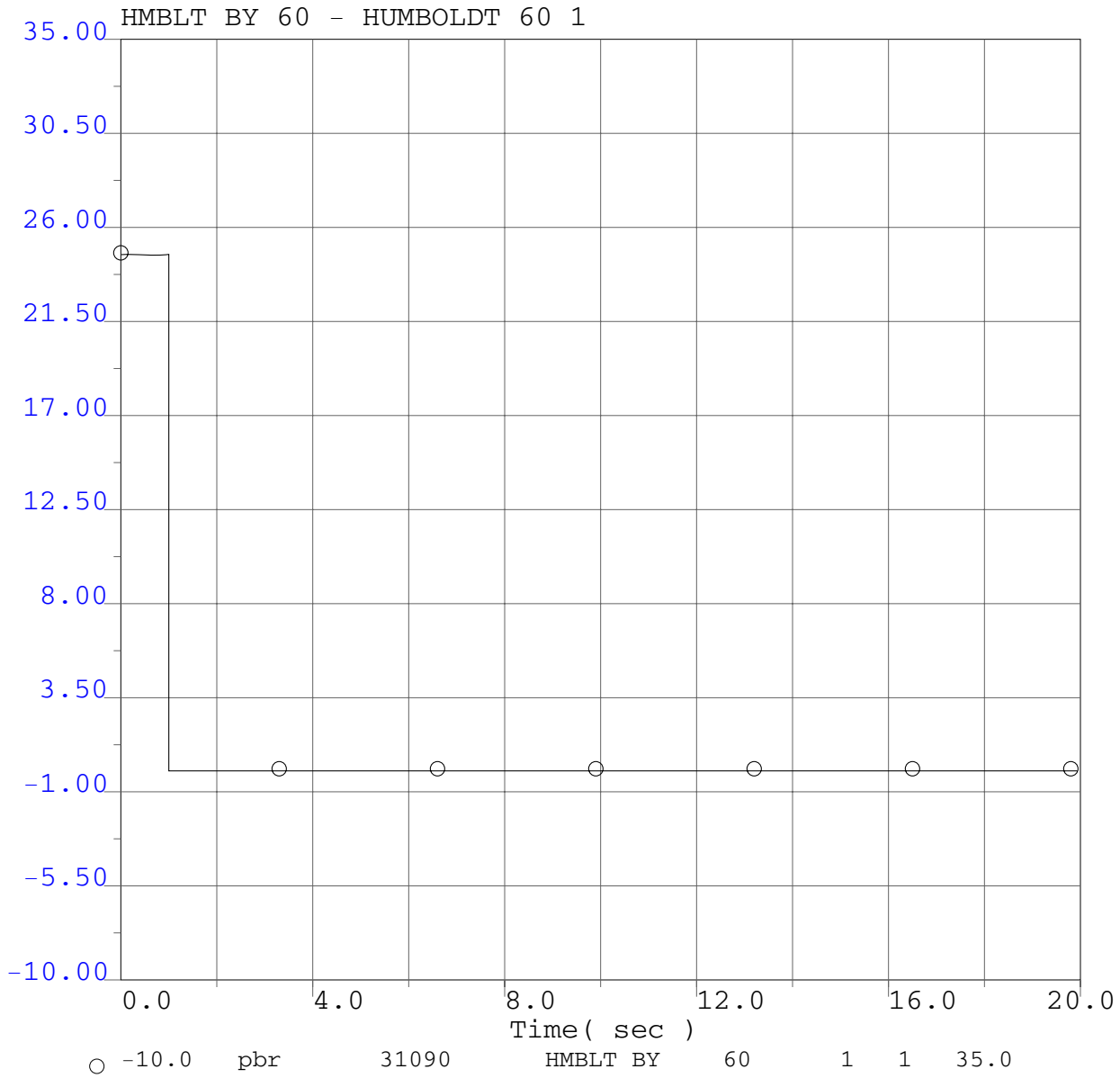

P0411 Project System Impact Study
2008 Summer Peak Base Case
P0411 @ 166.4MW
Humboldt Bay PP - Bumboldt #1 60kV line outage
3 ph 6 cyc flt @ Humboldt Bay PP 60kV bus & clr HBay-Humb #1 60kV line

P0411 Project System Impact Study

Selected PG&E Transmission Line Flows (MW)

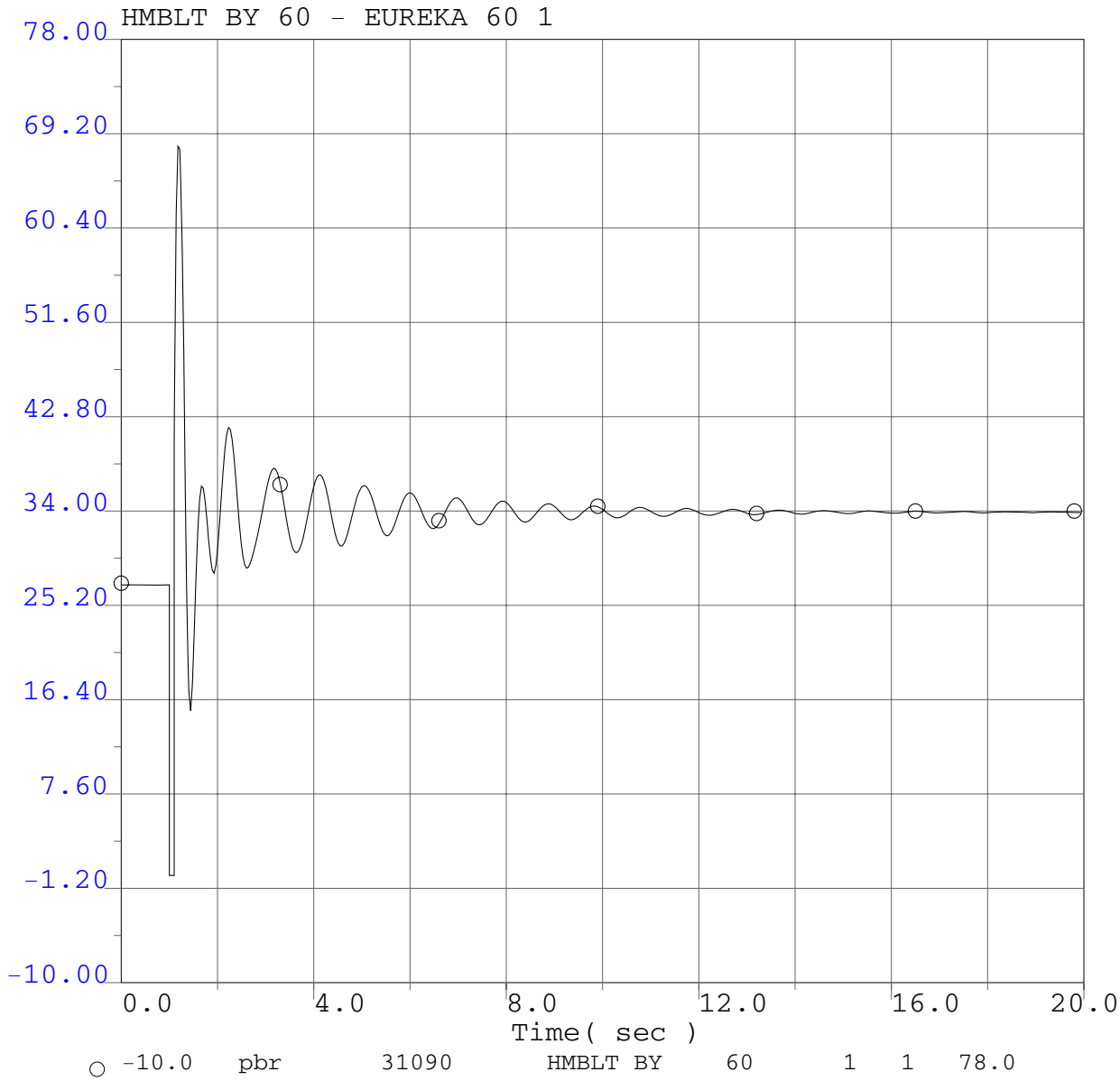

P0411 Project System Impact Study
2008 Summer Peak Base Case
P0411 @ 166.4MW
Humboldt Bay PP - Bumboldt #1 60kV line outage
3 ph 6 cyc flt @ Humboldt Bay PP 60kV bus & clr HBay-Humb #1 60kV line

P0411 Project System Impact Study

Selected PG&E Transmission Line Flows (MW)

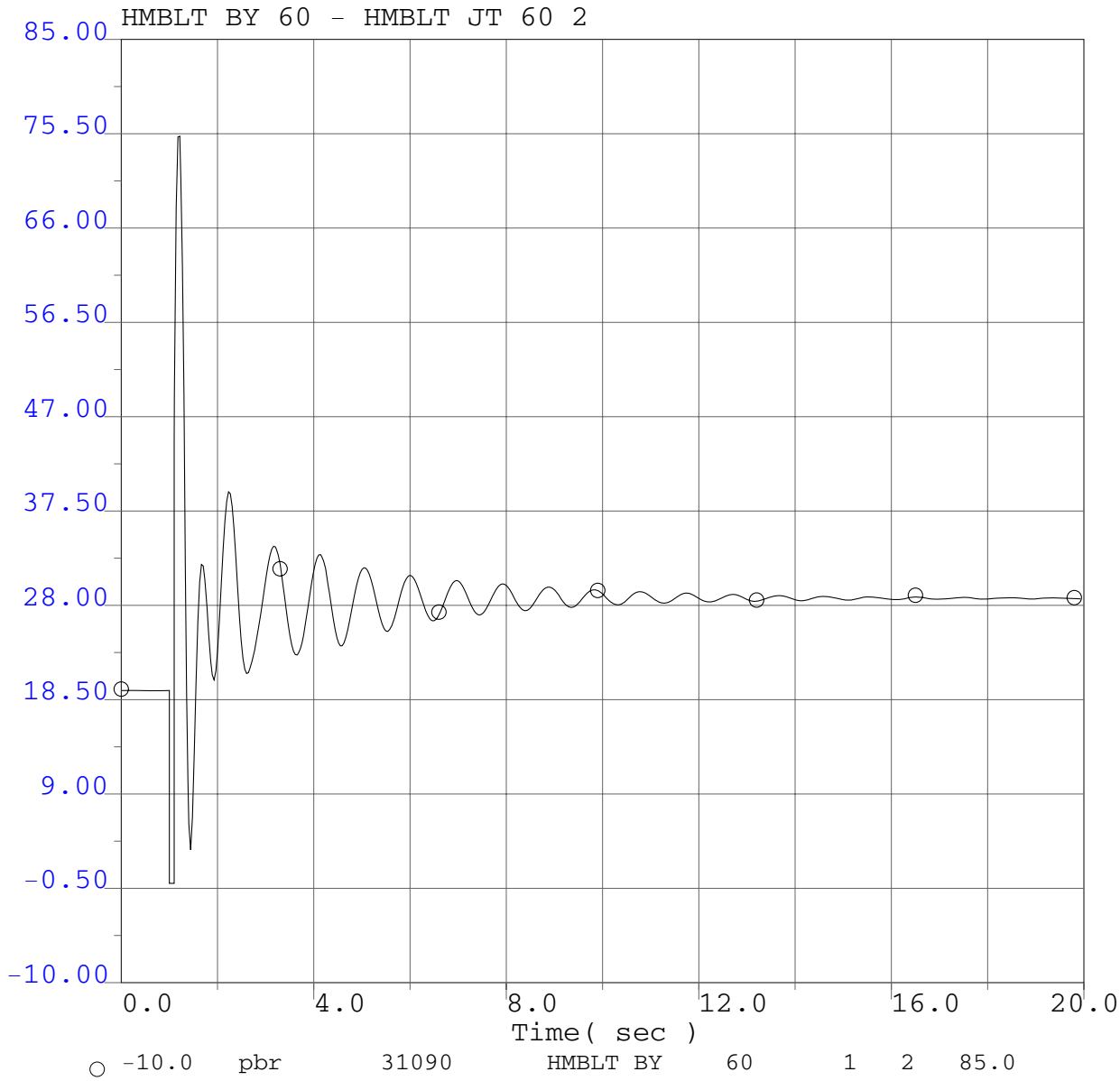

P0411 Project System Impact Study
2008 Summer Peak Base Case
P0411 @ 166.4MW
Humboldt Bay PP - Bumboldt #1 60kV line outage
3 ph 6 cyc flt @ Humboldt Bay PP 60kV bus & clr HBay-Humb #1 60kV line

P0411 Project System Impact Study

Selected PG&E Transmission Line Flows (MW)

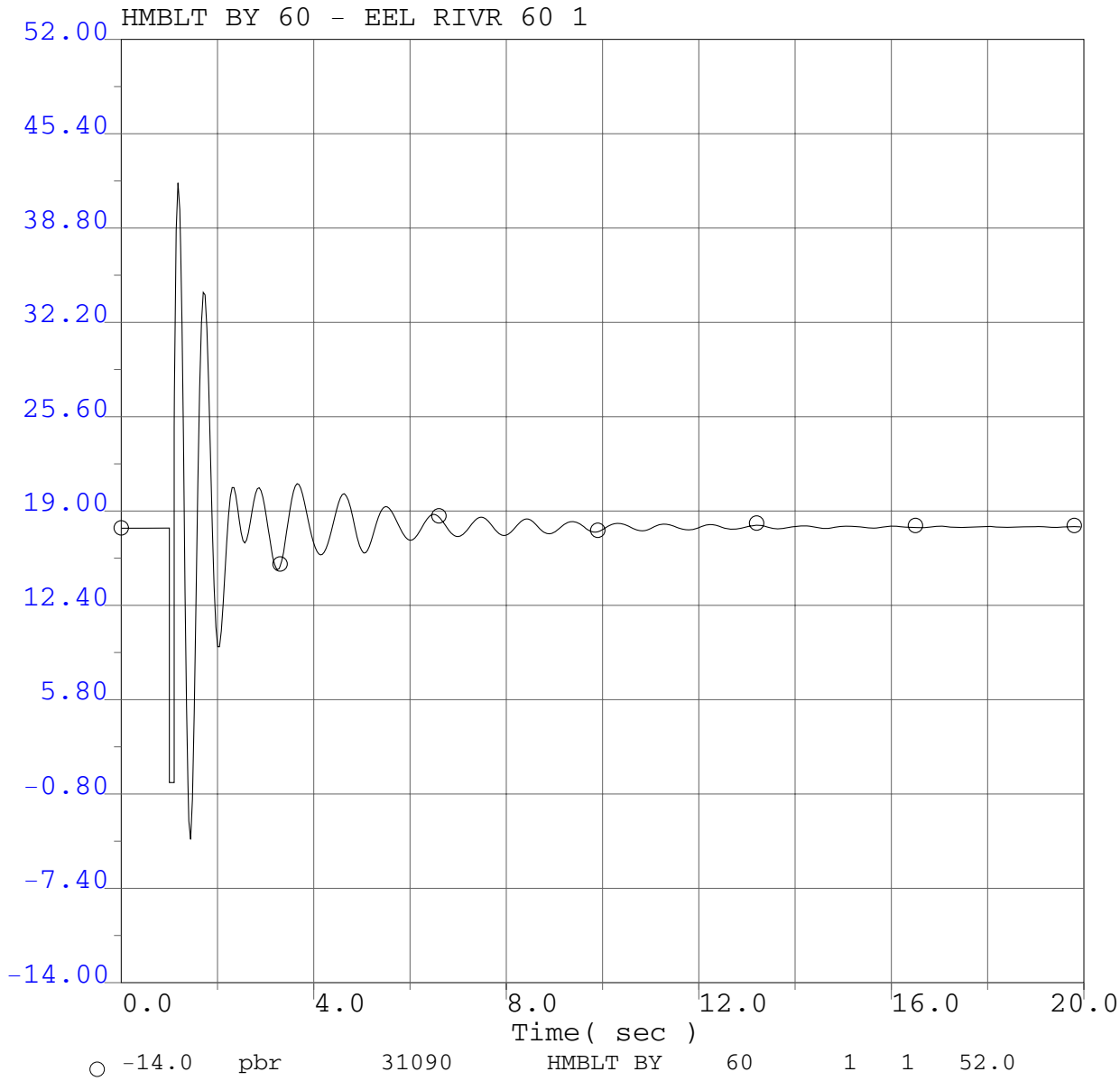

P0411 Project System Impact Study
2008 Summer Peak Base Case
P0411 @ 166.4MW
Humboldt Bay PP - Bumboldt #1 60kV line outage
3 ph 6 cyc flt @ Humboldt Bay PP 60kV bus & clr HBay-Humb #1 60kV line

P0411 Project System Impact Study

Selected PG&E Transmission Line Flows (MW)

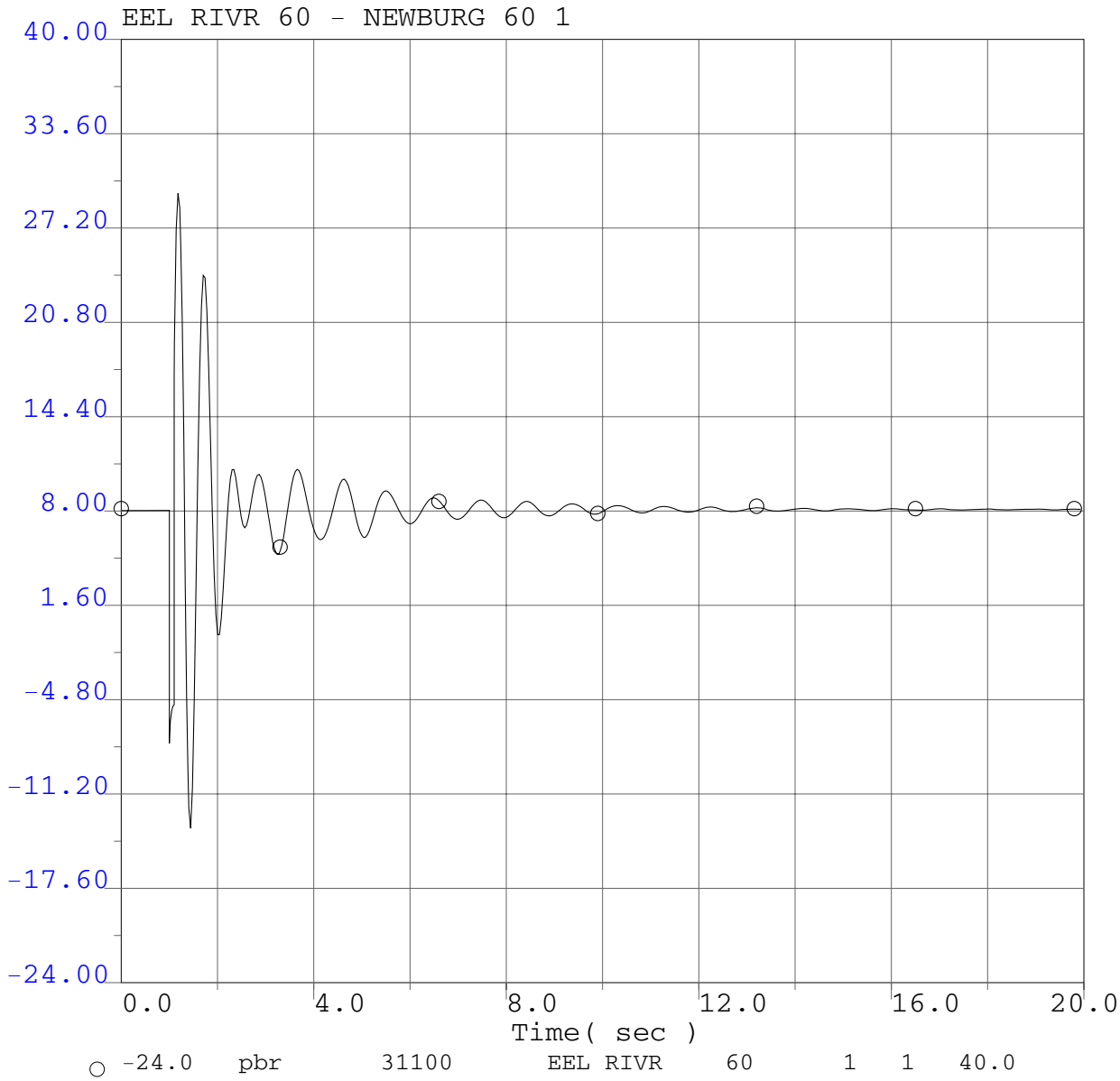

P0411 Project System Impact Study
2008 Summer Peak Base Case
P0411 @ 166.4MW
Humboldt Bay PP - Bumboldt #1 60kV line outage
3 ph 6 cyc flt @ Humboldt Bay PP 60kV bus & clr HBay-Humb #1 60kV line

P0411 Project System Impact Study

Selected PG&E Transmission Line Flows (MW)

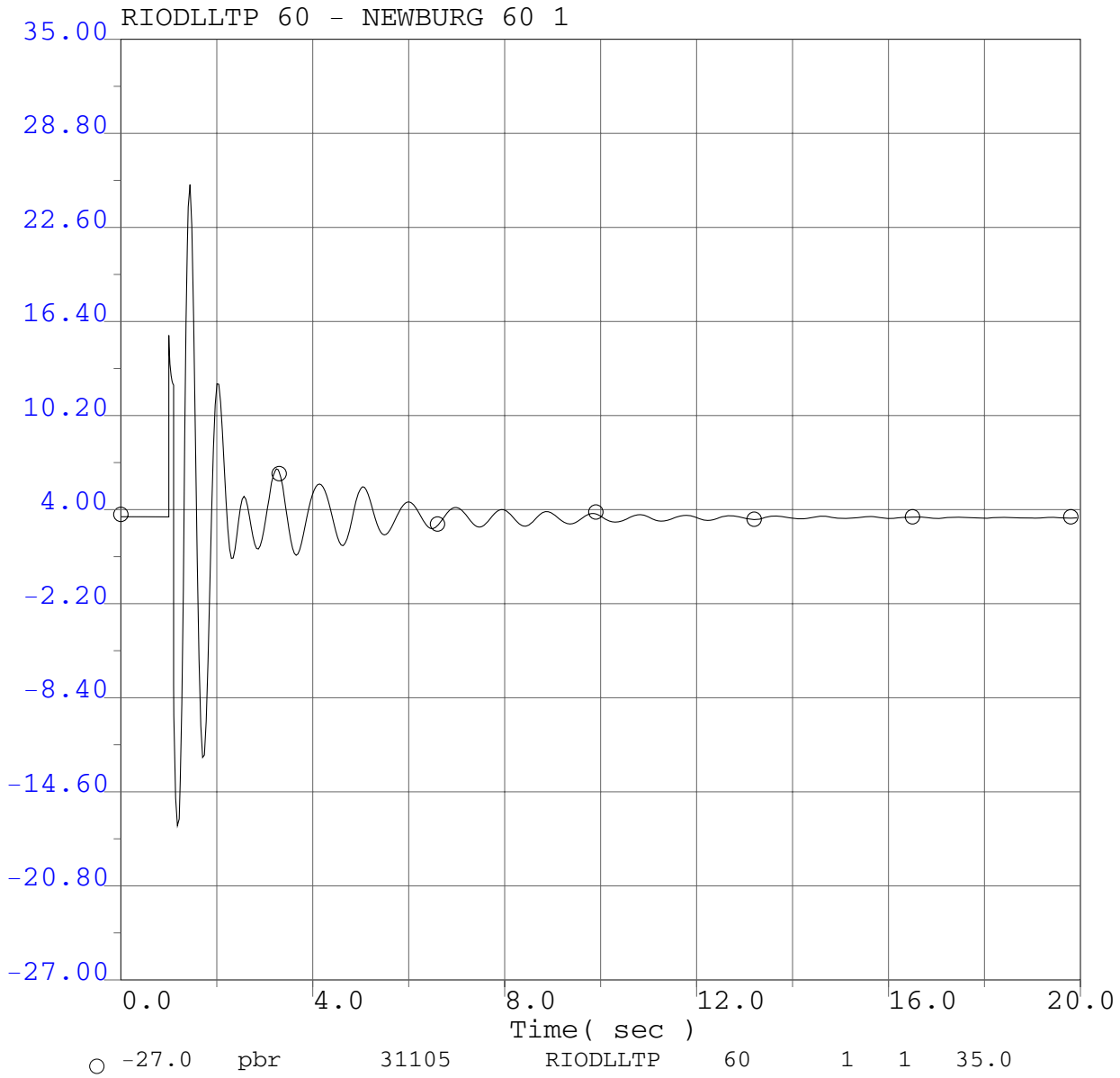

P0411 Project System Impact Study
2008 Summer Peak Base Case
P0411 @ 166.4MW
Humboldt Bay PP - Bumboldt #1 60kV line outage
3 ph 6 cyc flt @ Humboldt Bay PP 60kV bus & clr HBay-Humb #1 60kV line

P0411 Project System Impact Study

Selected PG&E Transmission Line Flows (MW)

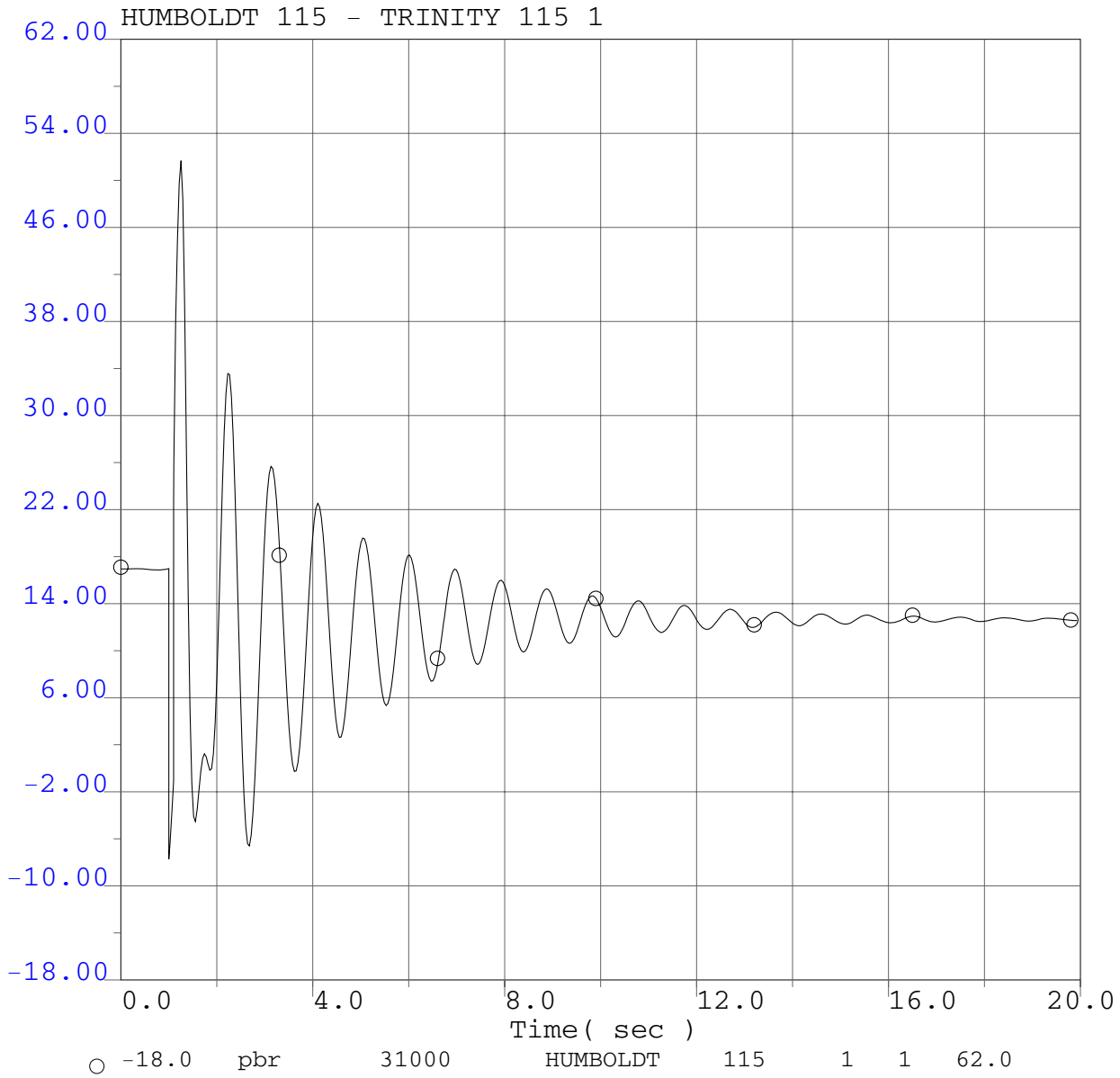

P0411 Project System Impact Study
2008 Summer Peak Base Case
P0411 @ 166.4MW
Humboldt Bay PP - Bumboldt #1 60kV line outage
3 ph 6 cyc flt @ Humboldt Bay PP 60kV bus & clr HBay-Humb #1 60kV line

P0411 Project System Impact Study

Selected PG&E Transmission Line Flows (MW)

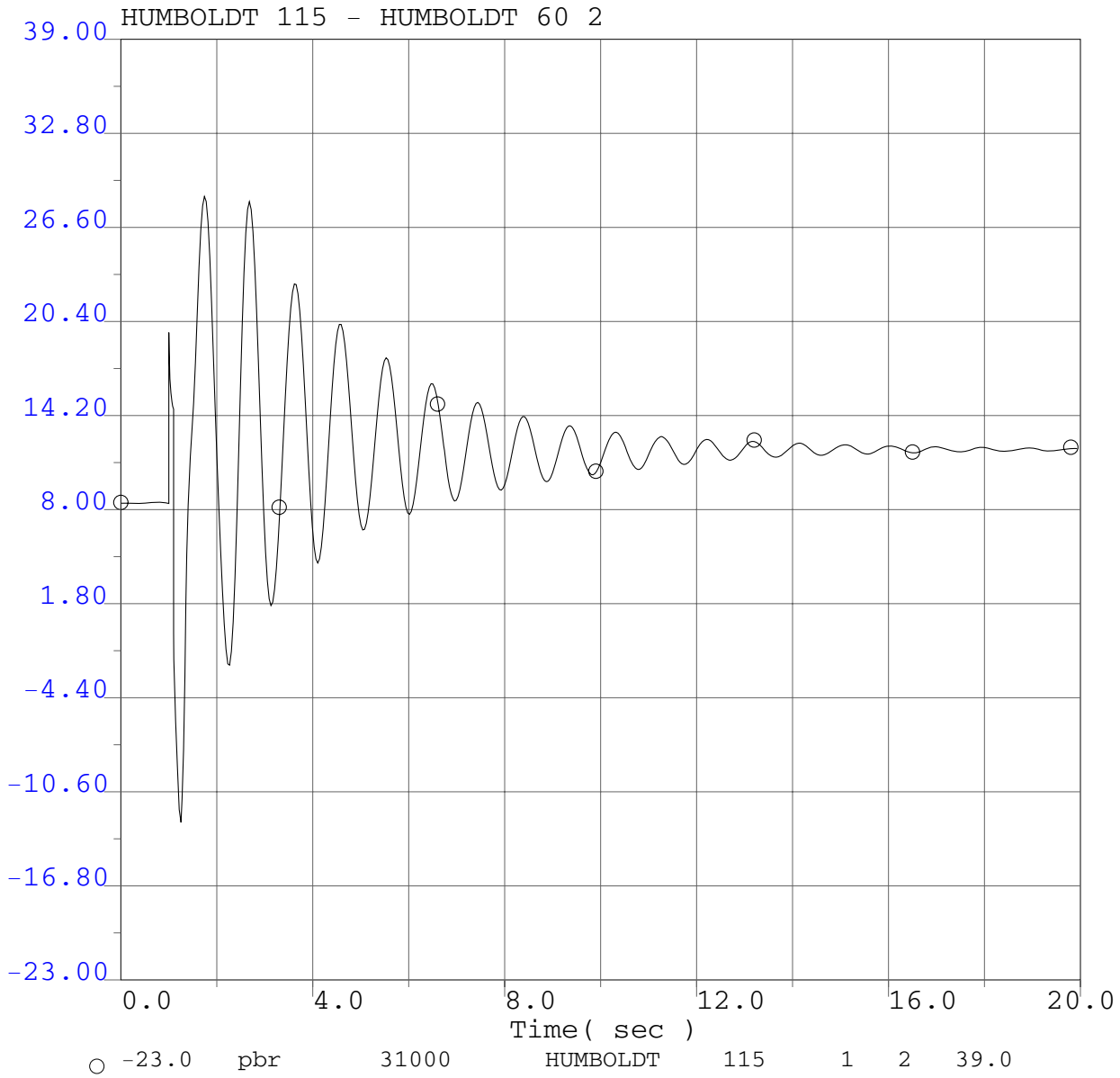

P0411 Project System Impact Study
2008 Summer Peak Base Case
P0411 @ 166.4MW
Humboldt Bay PP - Bumboldt #1 60kV line outage
3 ph 6 cyc flt @ Humboldt Bay PP 60kV bus & clr HBay-Humb #1 60kV line

P0411 Project System Impact Study

Selected PG&E Transmission Line Flows (MW)

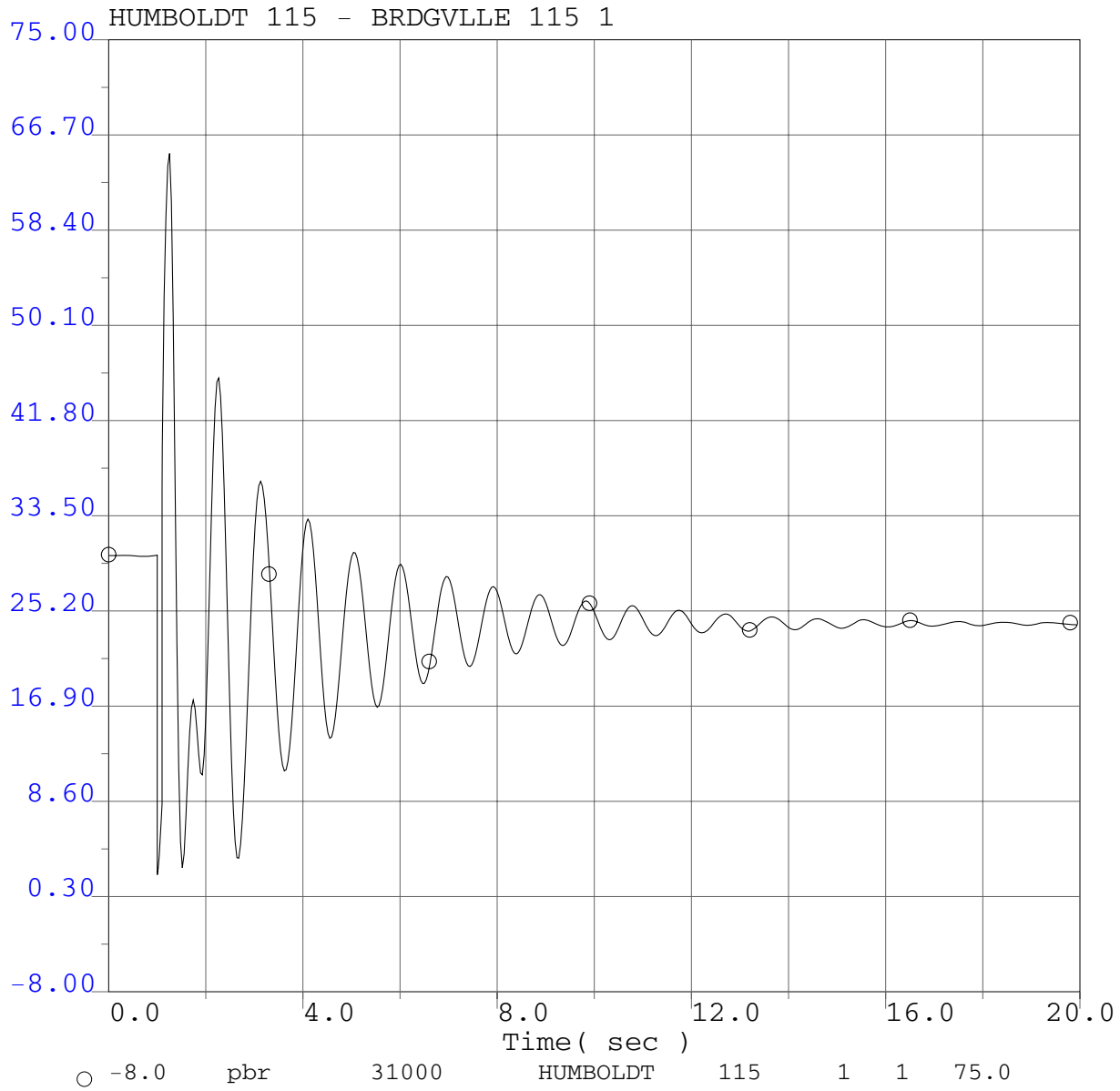

P0411 Project System Impact Study
2008 Summer Peak Base Case
P0411 @ 166.4MW
Humboldt Bay PP - Bumboldt #1 60kV line outage
3 ph 6 cyc flt @ Humboldt Bay PP 60kV bus & clr HBay-Humb #1 60kV line

P0411 Project System Impact Study

Selected PG&E Transmission Line Flows (MW)

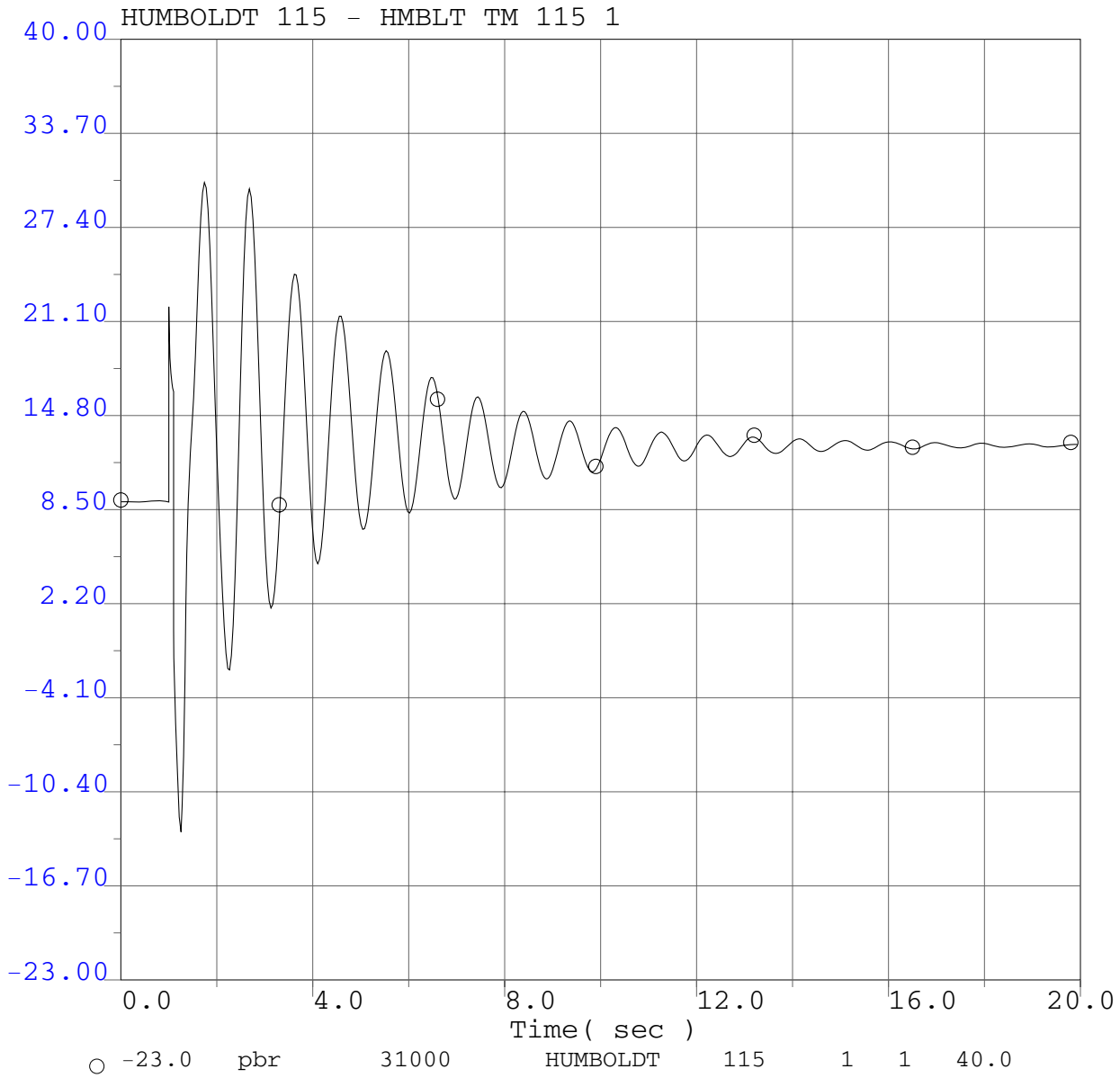

P0411 Project System Impact Study
2008 Summer Peak Base Case
P0411 @ 166.4MW
Humboldt Bay PP - Bumboldt #1 60kV line outage
3 ph 6 cyc flt @ Humboldt Bay PP 60kV bus & clr HBay-Humb #1 60kV line

P0411 Project System Impact Study

Selected PG&E Bus Voltage Plots Adjacent to Fault

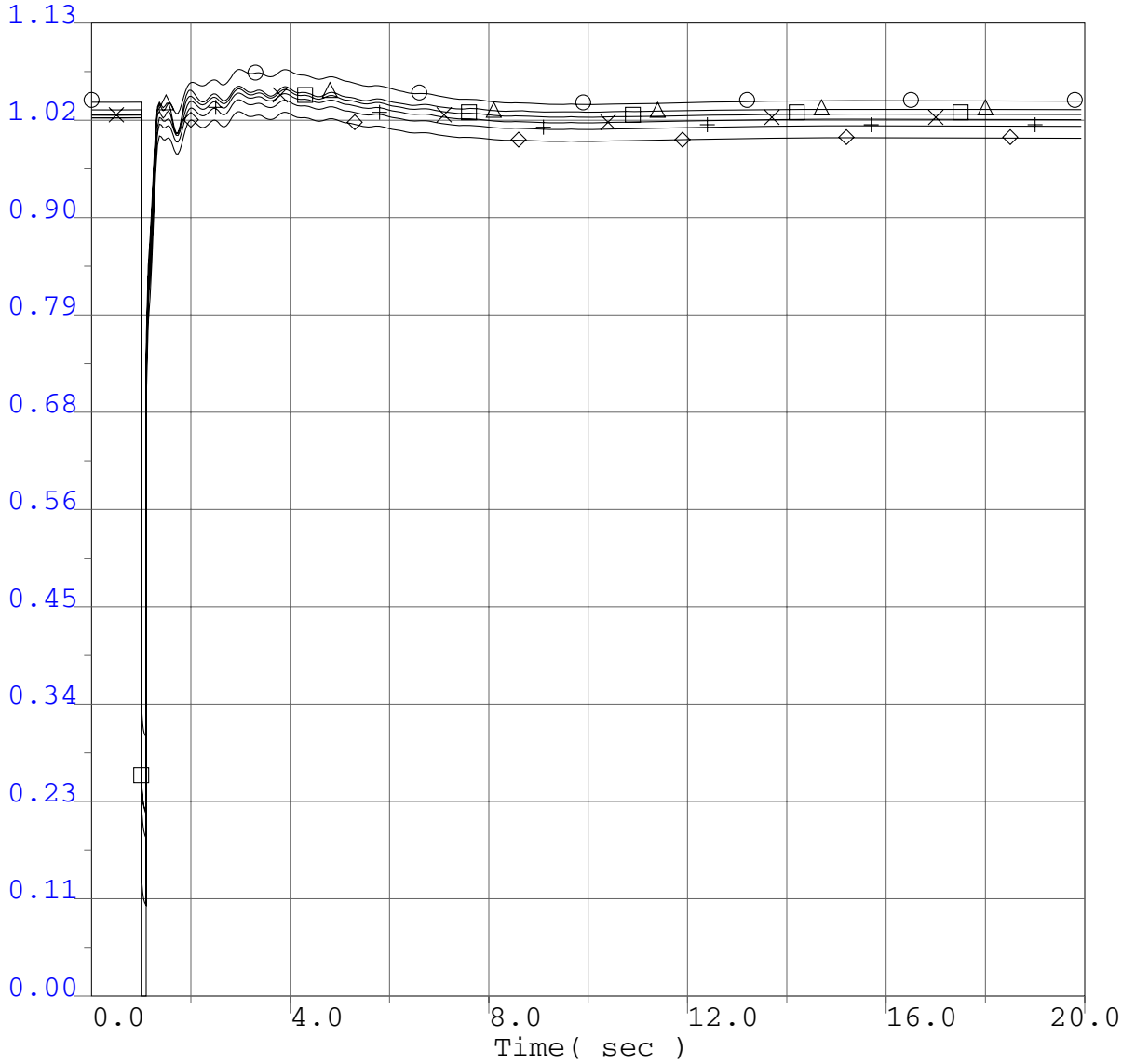

P0411 Project System Impact Study
2008 Summer Peak Base Case
P0411 @ 166.4MW
Humboldt Bay PP - Eureka #1 60kV line outage
3 ph 6 cyc flt @ Humboldt Bay PP 60kV bus & clr HBay-Eureka 60kV line

P0411 Project System Impact Study

Selected PG&E Bus Frequency Plots Adjacent to Fault

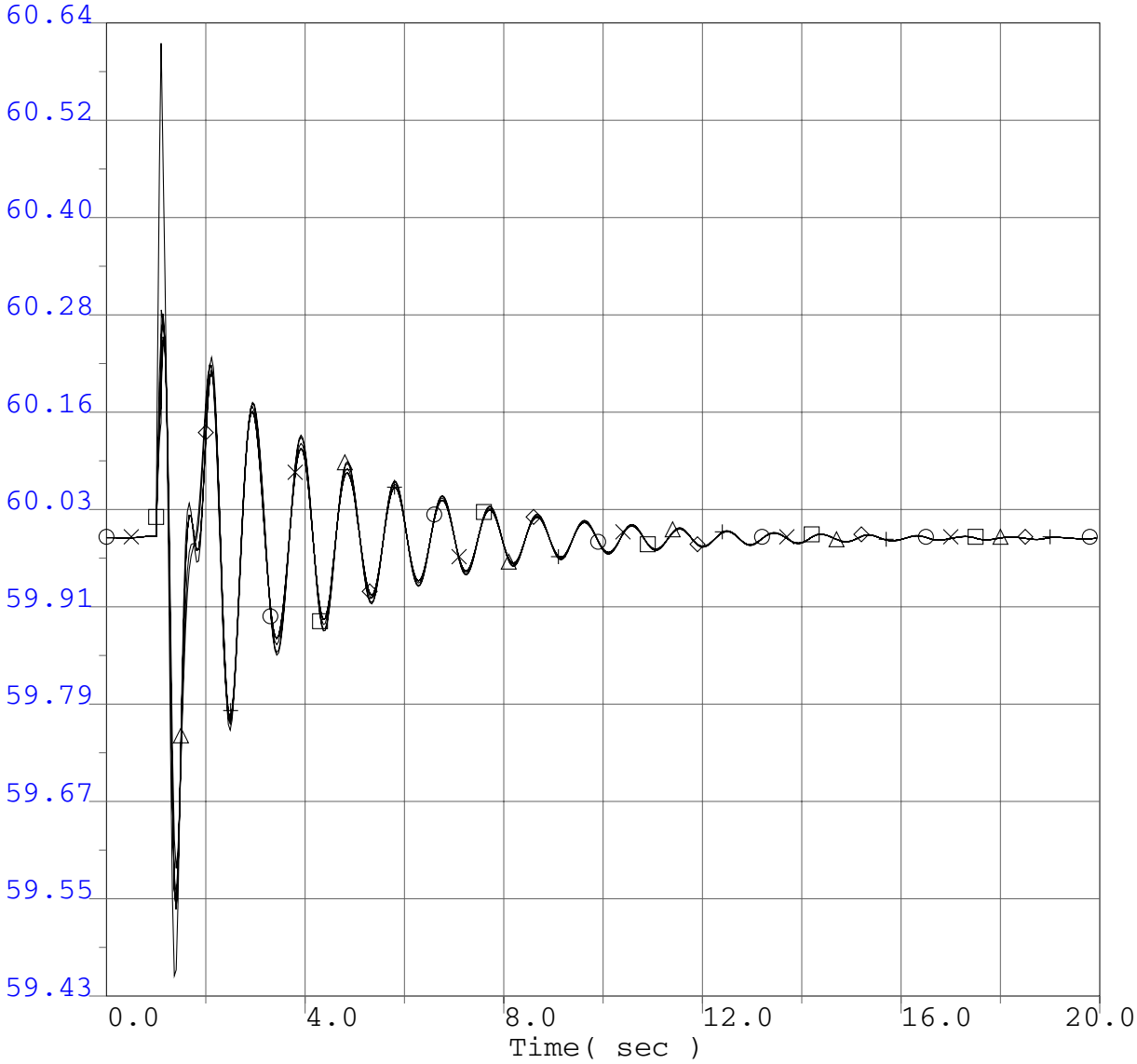

○	59.43	fbul	31090	HMBLT BY	60.0	"*" 1	60.64
×	59.43	fbus	31080	HUMBOLDT	60.0	"*" 1	60.64
□	59.43	fbul	31102	NEWBURG	60.0	"*" 1	60.64
△	59.43	fbus	31105	RIODLLTP	60.0	"*" 1	60.64
◇	59.43	fbul	31086	EUREKA	60.0	"*" 1	60.64
+	59.43	fbul	31082	HARRIS	60.0	"*" 1	60.64

P0411 Project System Impact Study
2008 Summer Peak Base Case
P0411 @ 166.4MW
Humboldt Bay PP - Eureka #1 60kV line outage
3 ph 6 cyc flt @ Humboldt Bay PP 60kV bus & clr HBay-Eureka 60kV line

P0411 Project System Impact Study

Project Generator Terminal Voltages

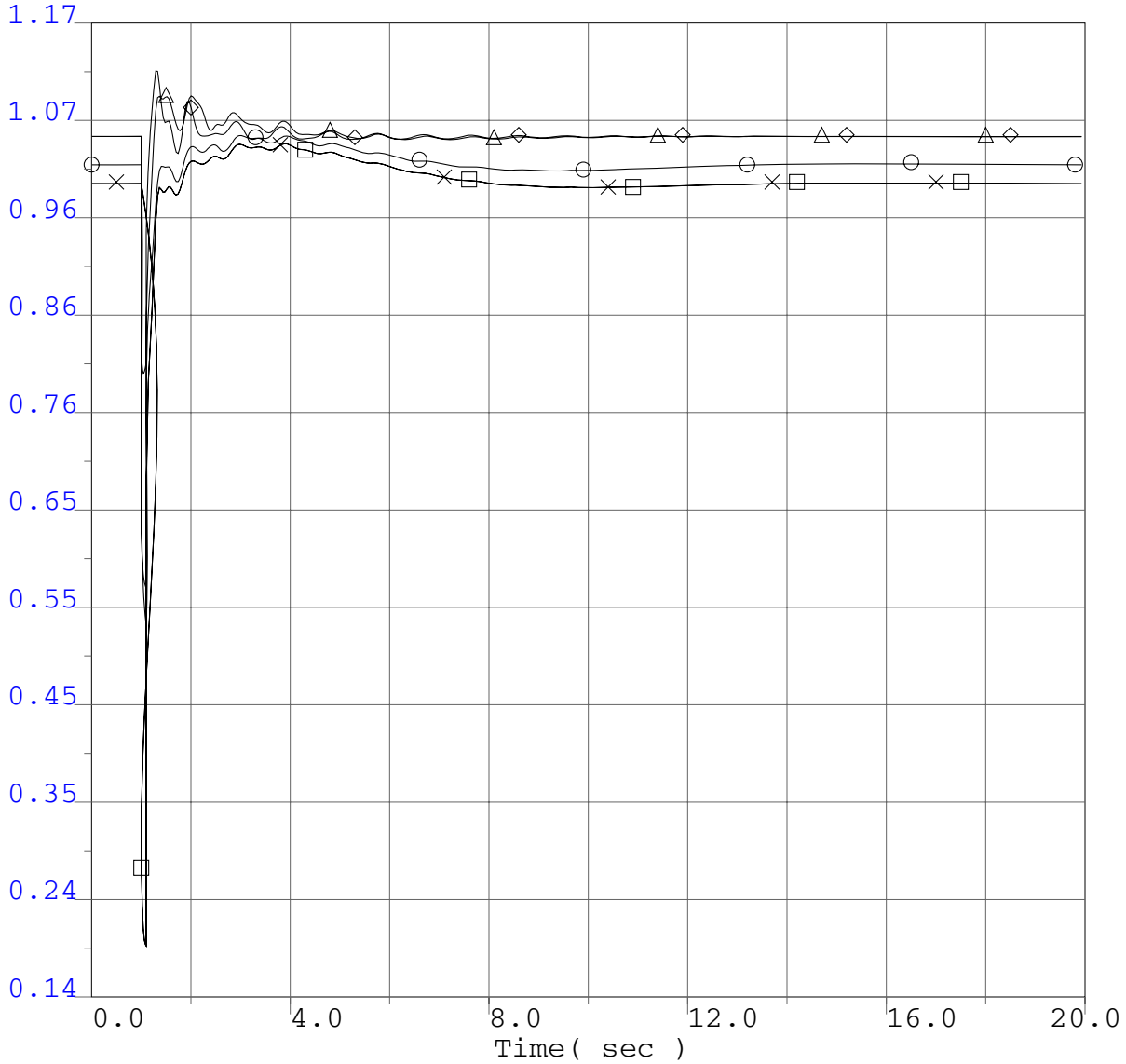

○	0.14	vt	31180	P0411G1	13.8	"1" 1	1.17
×	0.14	vt	31181	P0411G2	13.8	"5" 1	1.17
□	0.14	vt	31182	P0411G3	13.8	"8" 1	1.17
△	0.14	vt	31150	FAIRHAVN	13.8	"1" 1	1.17
◇	0.14	vt	31158	LP SAMOA	12.5	"1" 1	1.17

P0411 Project System Impact Study
2008 Summer Peak Base Case
P0411 @ 166.4MW
Humboldt Bay PP - Eureka #1 60kV line outage
3 ph 6 cyc flt @ Humboldt Bay PP 60kV bus & clr HBay-Eureka 60kV line

P0411 Project System Impact Study

Project Generator Rotor Speed

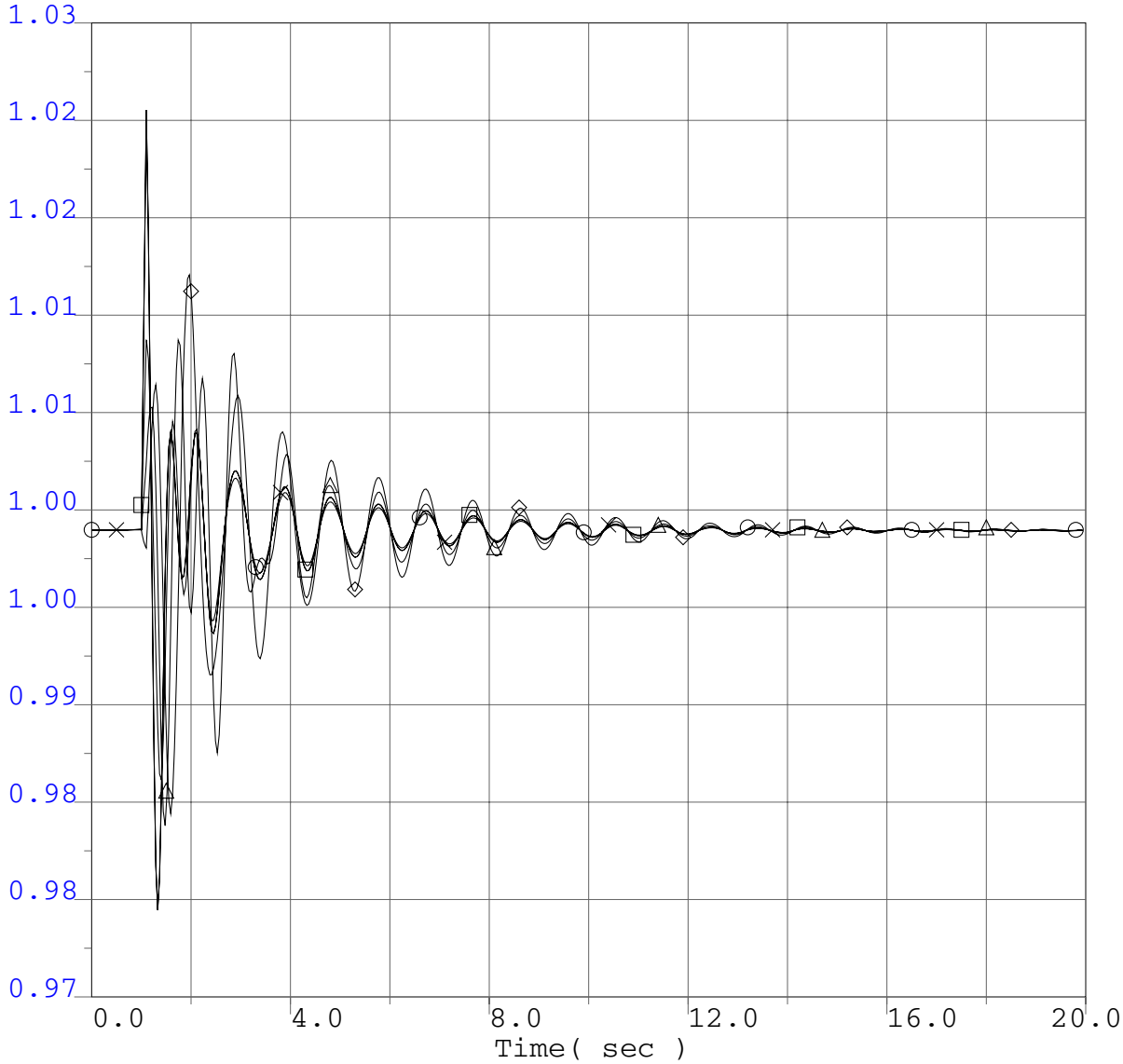

○	0.9734	spd	31180	P0411G1	13.8	"1" 1	1.0289
×	0.9734	spd	31181	P0411G2	13.8	"5" 1	1.0289
□	0.9734	spd	31182	P0411G3	13.8	"8" 1	1.0289
△	0.9734	spd	31150	FAIRHAVN	13.8	"1" 1	1.0289
◇	0.9734	spd	31158	LP SAMOA	12.5	"1" 1	1.0289

P0411 Project System Impact Study
2008 Summer Peak Base Case
P0411 @ 166.4MW
Humboldt Bay PP - Eureka #1 60kV line outage
3 ph 6 cyc flt @ Humboldt Bay PP 60kV bus & clr HBay-Eureka 60kV line

P0411 Project System Impact Study

Project Generator Terminal Power

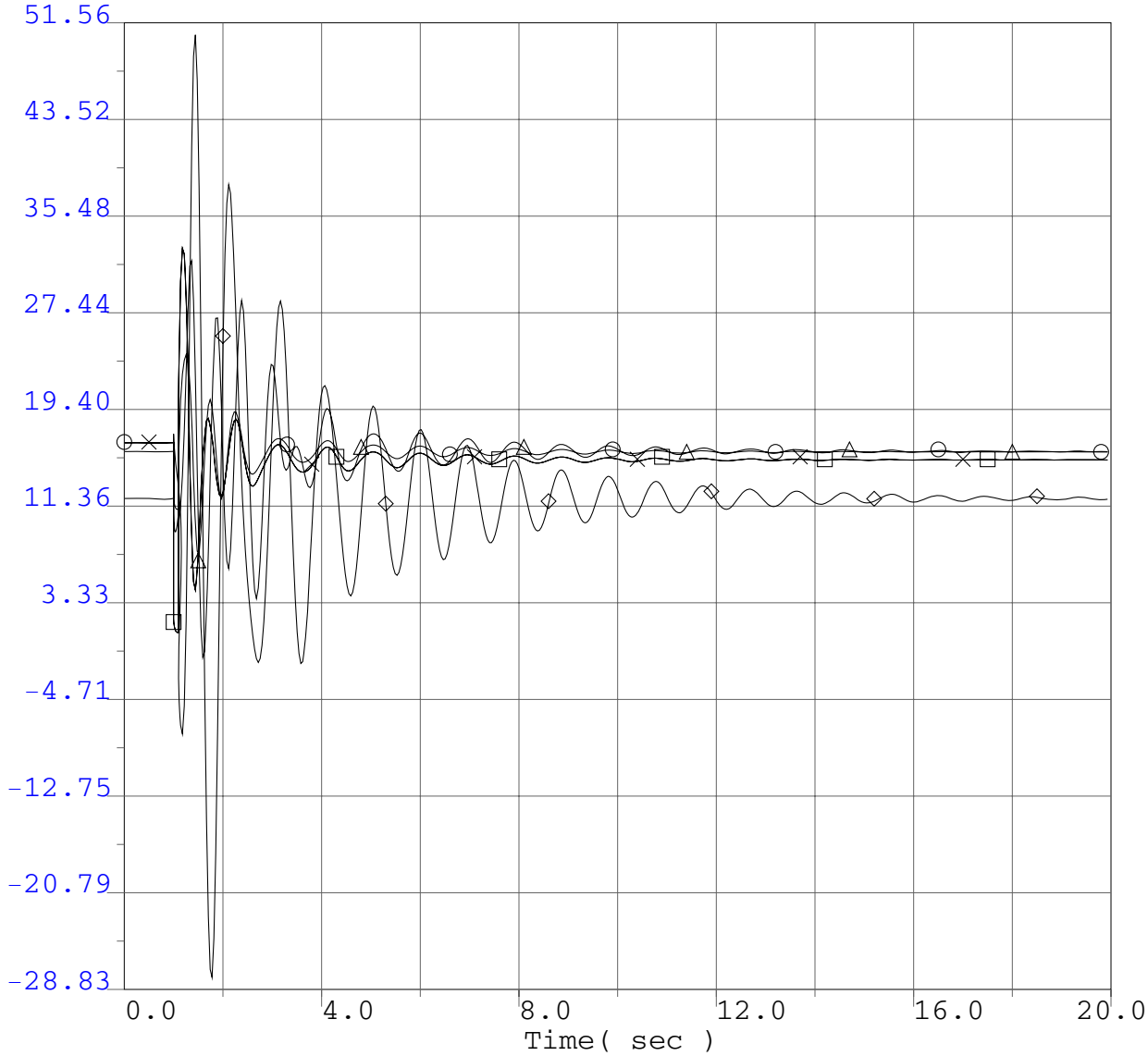

○	-28.83	pg	31180	P0411G1	13.8	"1" 1	51.56
×	-28.83	pg	31181	P0411G2	13.8	"5" 1	51.56
□	-28.83	pg	31182	P0411G3	13.8	"8" 1	51.56
△	-28.83	pg	31150	FAIRHAVN	13.8	"1" 1	51.56
◇	-28.83	pg	31158	LP SAMOA	12.5	"1" 1	51.56

P0411 Project System Impact Study
2008 Summer Peak Base Case
P0411 @ 166.4MW
Humboldt Bay PP - Eureka #1 60kV line outage
3 ph 6 cyc flt @ Humboldt Bay PP 60kV bus & clr HBay-Eureka 60kV line

P0411 Project System Impact Study

Project Generator Terminal Reactive Power

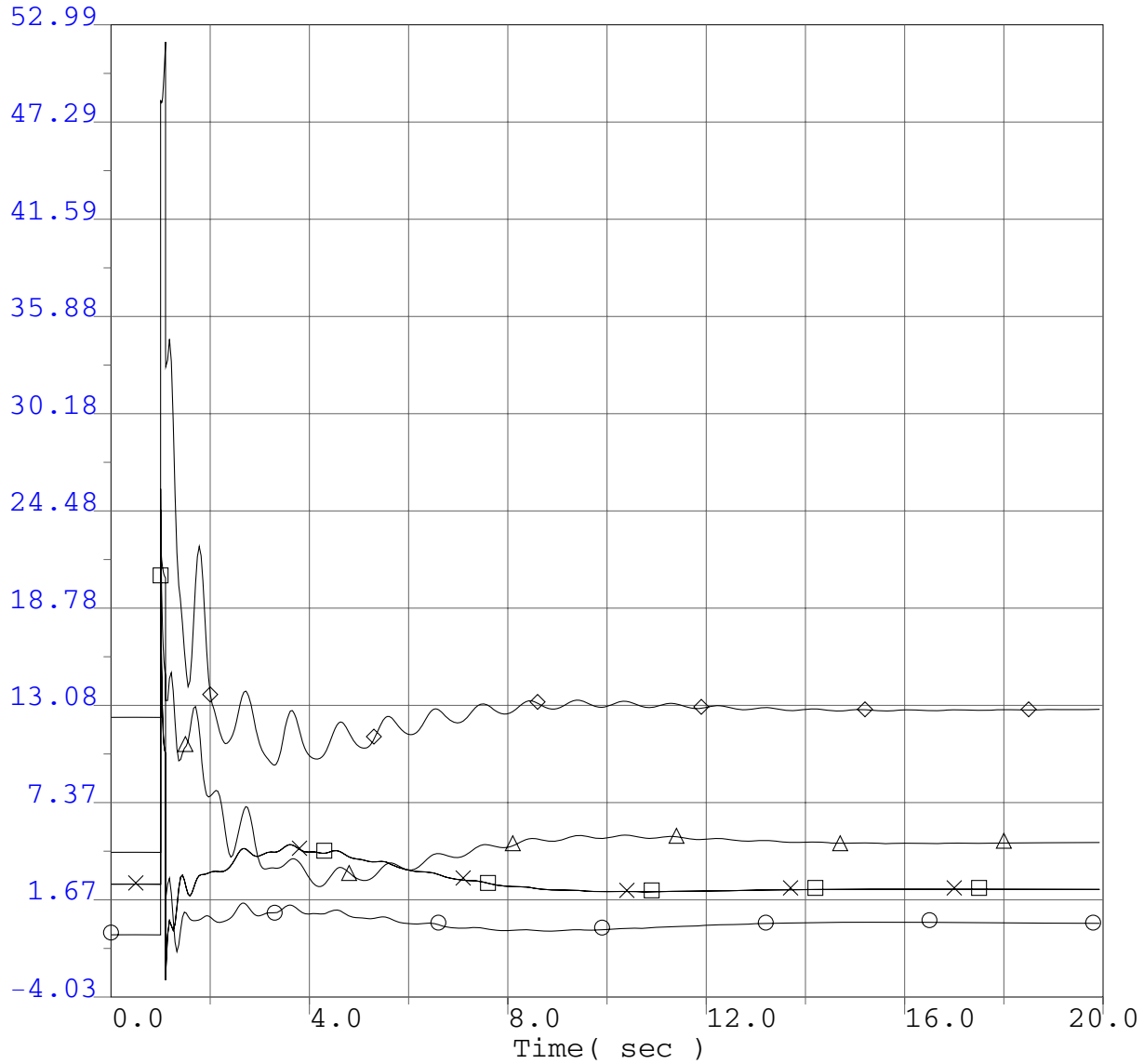

○	-4.03	qg	31180	P0411G1	13.8	"1" 1	52.99
×	-4.03	qg	31181	P0411G2	13.8	"5" 1	52.99
□	-4.03	qg	31182	P0411G3	13.8	"8" 1	52.99
△	-4.03	qg	31150	FAIRHAVN	13.8	"1" 1	52.99
◇	-4.03	qg	31158	LP SAMOA	12.5	"1" 1	52.99

P0411 Project System Impact Study
2008 Summer Peak Base Case
P0411 @ 166.4MW
Humboldt Bay PP - Eureka #1 60kV line outage
3 ph 6 cyc flt @ Humboldt Bay PP 60kV bus & clr HBay-Eureka 60kV line

P0411 Project System Impact Study

Selected WECC Bus Voltage Plots

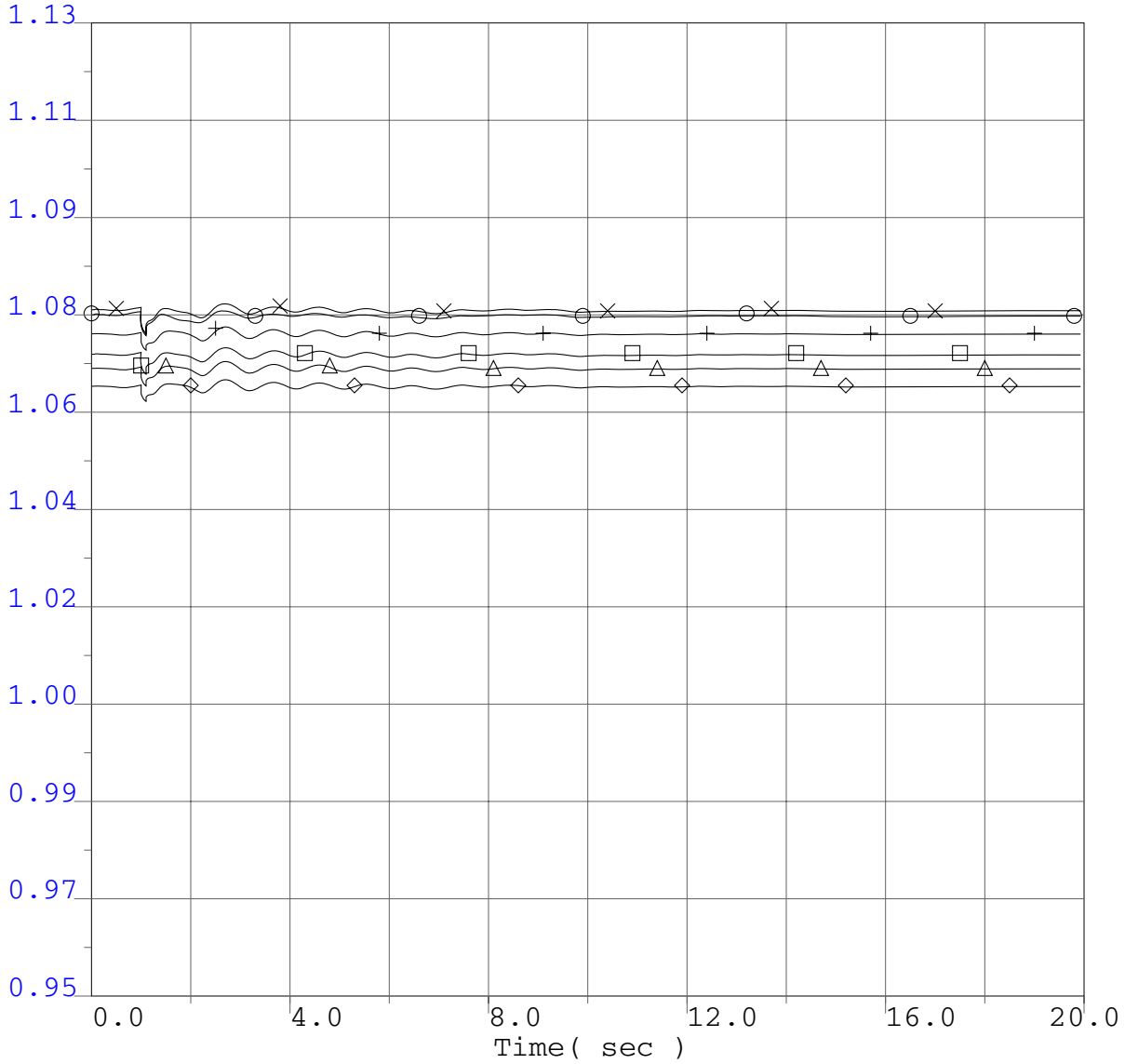

○	0.95	vbus	40687	MALIN	500.0	"*" 1	1.13
×	0.95	vbus	30005	ROUND MT	500.0	"*" 1	1.13
□	0.95	vbus	30015	TABLE MT	500.0	"*" 1	1.13
△	0.95	vbus	30030	VACA-DIX	500.0	"*" 1	1.13
◇	0.95	vbus	30040	TESLA	500.0	"*" 1	1.13
+	0.95	vbus	30035	TRACY	500.0	"*" 1	1.13

P0411 Project System Impact Study
2008 Summer Peak Base Case
P0411 @ 166.4MW
Humboldt Bay PP - Eureka #1 60kV line outage
3 ph 6 cyc flt @ Humboldt Bay PP 60kV bus & clr HBay-Eureka 60kV line

P0411 Project System Impact Study

Selected WECC Bus Voltage Plots

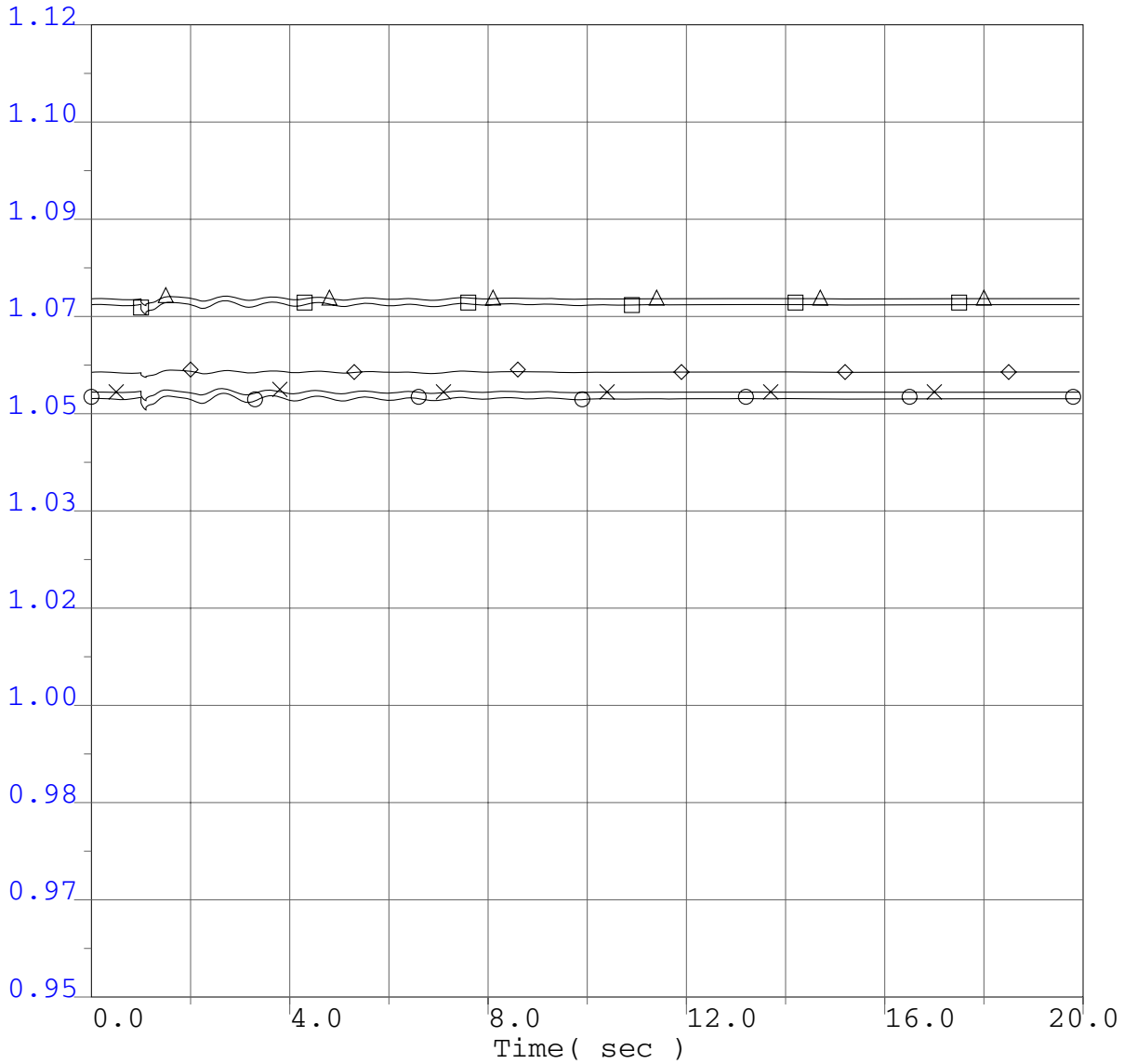

○ 0.95	vbus	30042	METCALF	500.0	"*" 1	1.12
× 0.95	vbus	30045	MOSSLAND	500.0	"*" 1	1.12
□ 0.95	vbus	30050	LOSBANOS	500.0	"*" 1	1.12
△ 0.95	vbus	30055	GATES	500.0	"*" 1	1.12
◇ 0.95	vbus	30060	MIDWAY	500.0	"*" 1	1.12

P0411 Project System Impact Study
2008 Summer Peak Base Case
P0411 @ 166.4MW
Humboldt Bay PP - Eureka #1 60kV line outage
3 ph 6 cyc flt @ Humboldt Bay PP 60kV bus & clr HBay-Eureka 60kV line

P0411 Project System Impact Study

Selected WECC Bus Voltage Plots

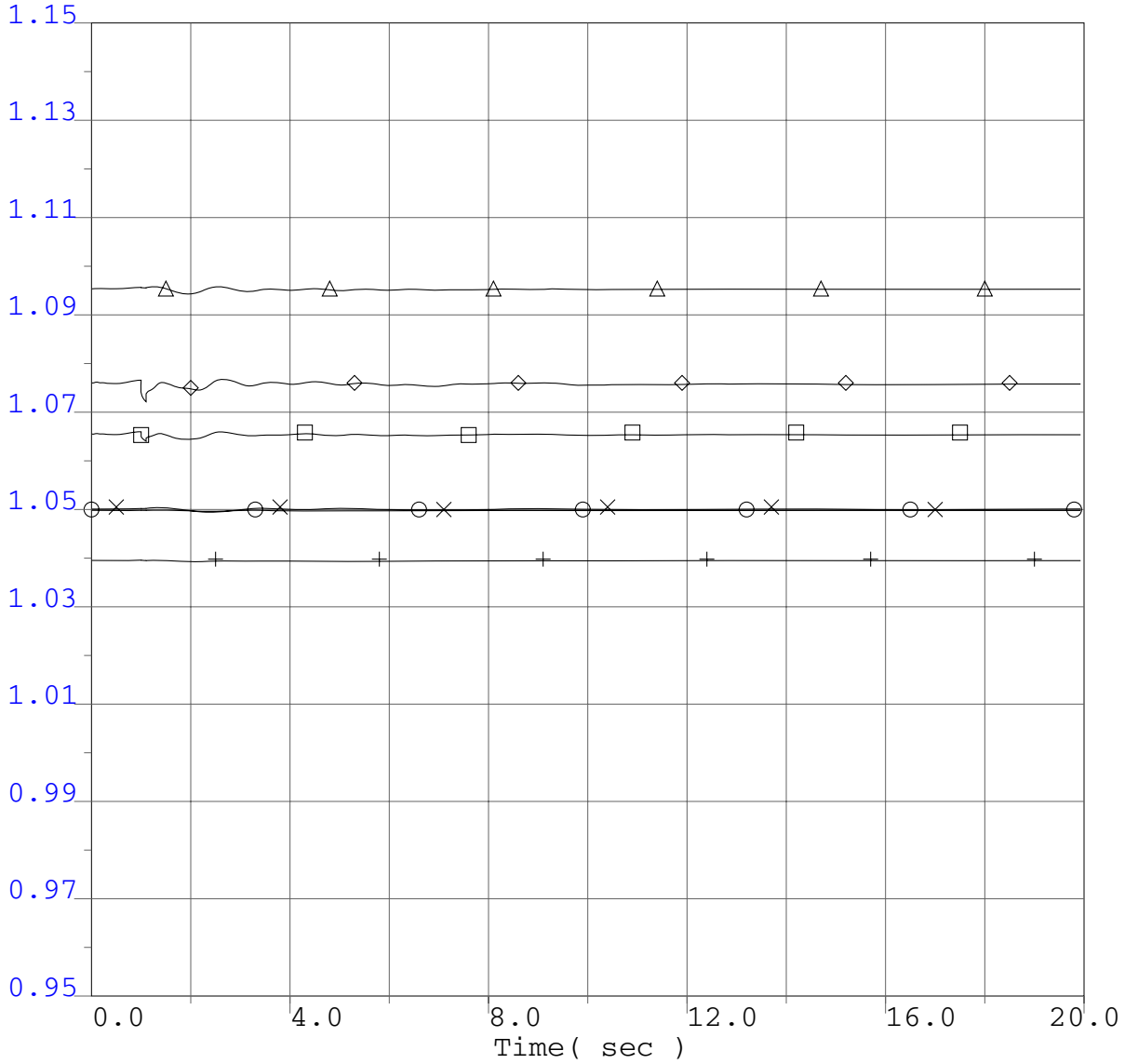

○	0.95	vbus	14001	FOURCORN	500.0	"*" 1	1.15
×	0.95	vbus	50703	NIC500	500.0	"*" 1	1.15
□	0.95	vbus	60240	MIDPOINT	500.0	"*" 1	1.15
△	0.95	vbus	62012	TOWN2	500.0	"*" 1	1.15
◇	0.95	vbus	40687	MALIN	500.0	"*" 1	1.15
+	0.95	vbus	66340	SIGURD	345.0	"*" 1	1.15

P0411 Project System Impact Study
2008 Summer Peak Base Case
P0411 @ 166.4MW
Humboldt Bay PP - Eureka #1 60kV line outage
3 ph 6 cyc flt @ Humboldt Bay PP 60kV bus & clr HBay-Eureka 60kV line

P0411 Project System Impact Study

Selected WECC Bus Voltage Plots

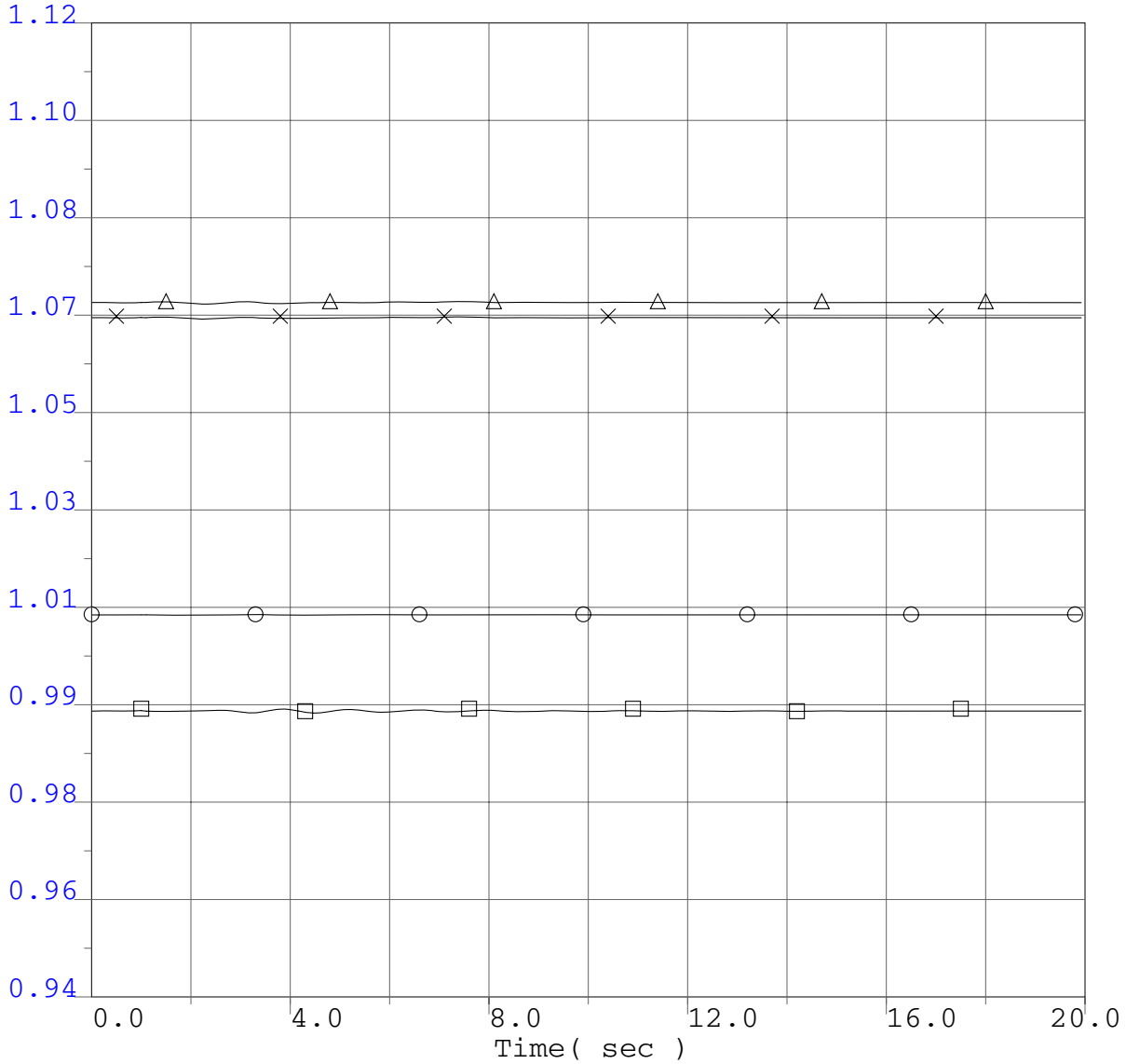

○ 0.94	vbus	54150	LANGDON2	500.0	"*"	1	1.12
× 0.94	vbus	14003	NAVAJO	500.0	"*"	1	1.12
□ 0.94	vbus	24153	VESTAL	230.0	"*"	1	1.12
△ 0.94	vbus	22360	IMPRLVLY	500.0	"*"	1	1.12

P0411 Project System Impact Study
2008 Summer Peak Base Case
P0411 @ 166.4MW
Humboldt Bay PP - Eureka #1 60kV line outage
3 ph 6 cyc flt @ Humboldt Bay PP 60kV bus & clr HBay-Eureka 60kV line

P0411 Project System Impact Study

Selected WECC Bus Frequency Plots

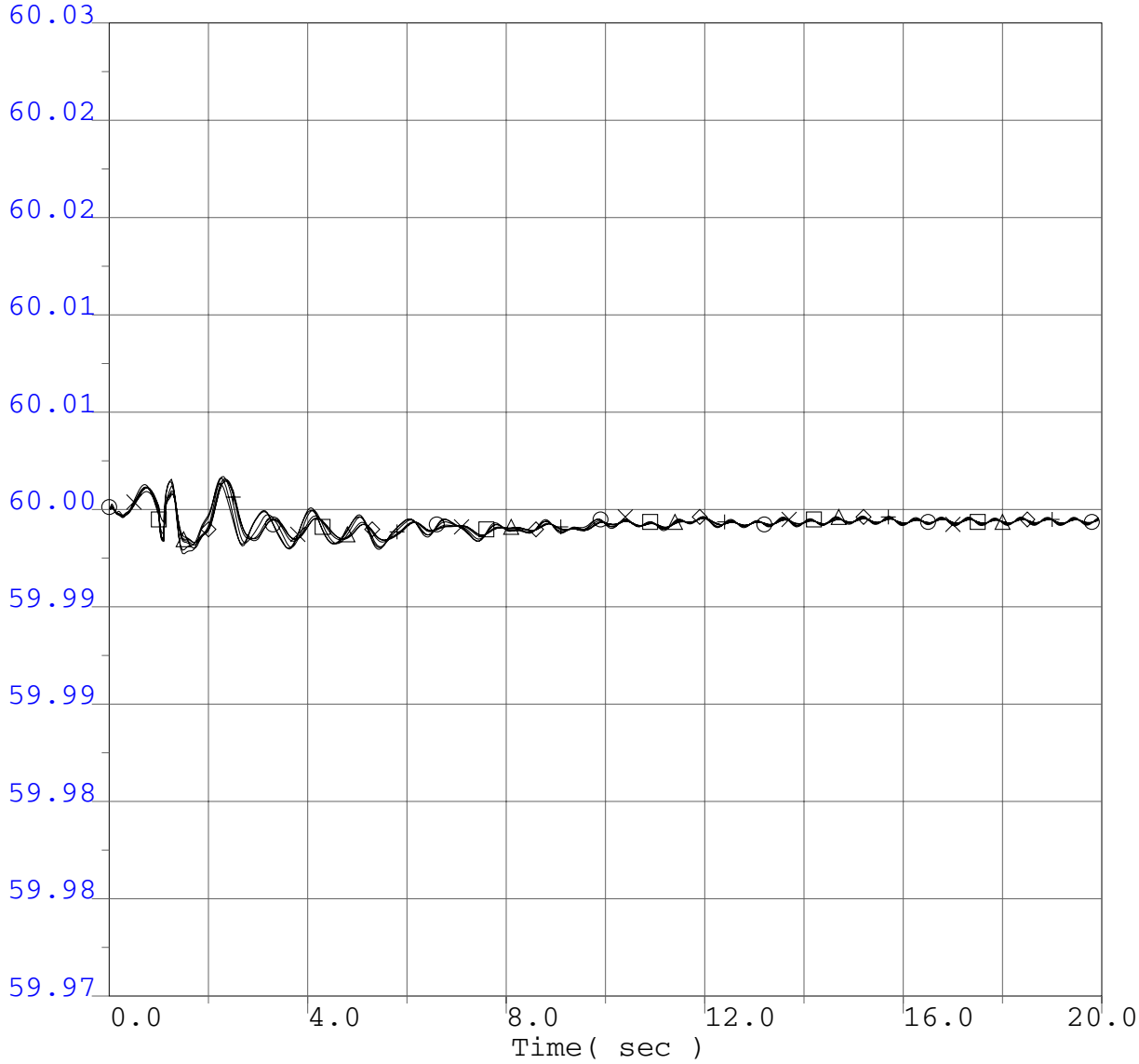

○ 59.97	fbus	40687	MALIN	500.0	"*"	1	60.03
× 59.97	fbus	30005	ROUND MT	500.0	"*"	1	60.03
□ 59.97	fbus	30015	TABLE MT	500.0	"*"	1	60.03
△ 59.97	fbus	30030	VACA-DIX	500.0	"*"	1	60.03
◇ 59.97	fbus	30040	TESLA	500.0	"*"	1	60.03
+ 59.97	fbus	30035	TRACY	500.0	"*"	1	60.03

P0411 Project System Impact Study
2008 Summer Peak Base Case
P0411 @ 166.4MW
Humboldt Bay PP - Eureka #1 60kV line outage
3 ph 6 cyc flt @ Humboldt Bay PP 60kV bus & clr HBay-Eureka 60kV line

P0411 Project System Impact Study

Selected WECC Bus Frequency Plots

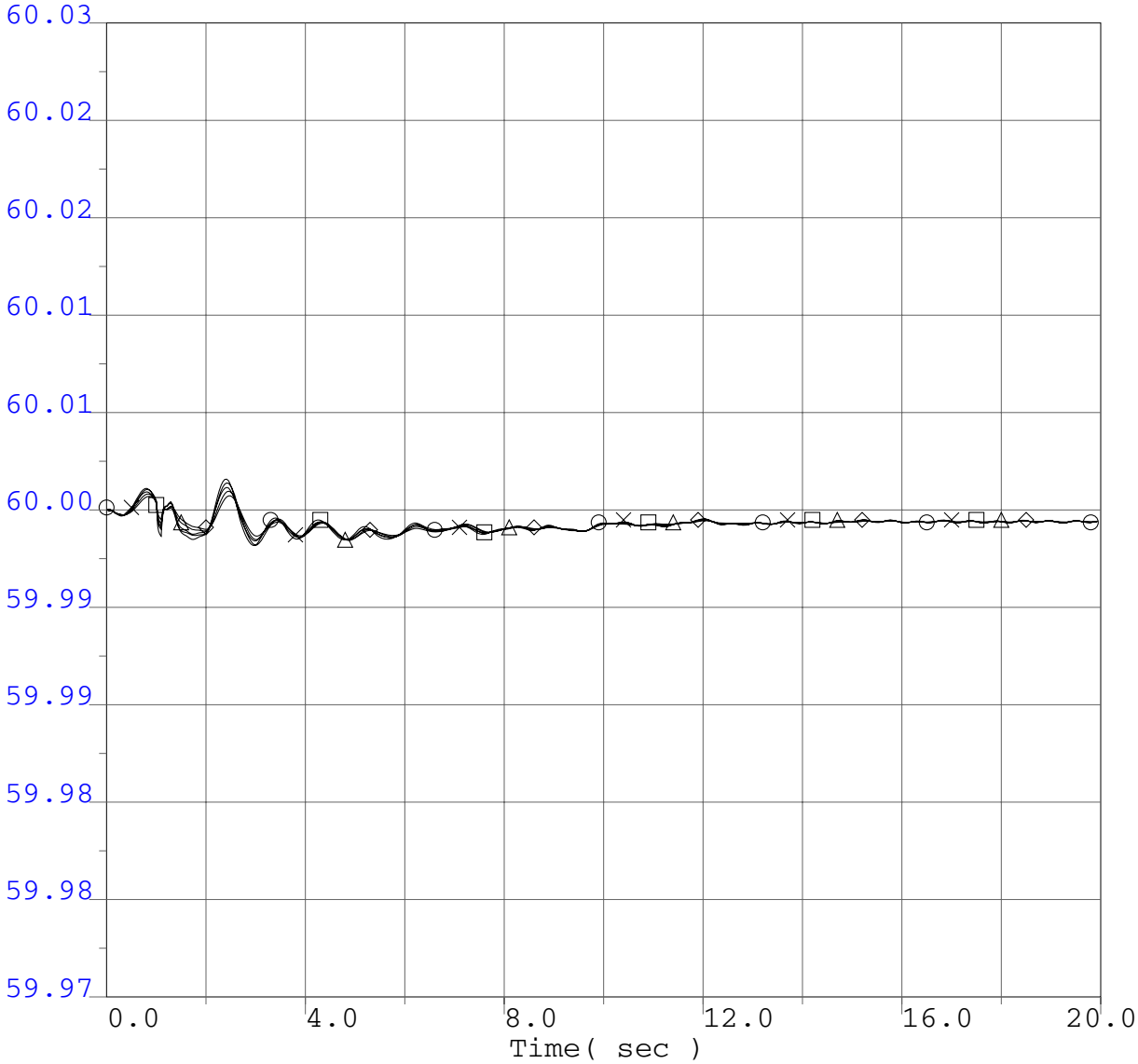

○ 59.97	fbus	30042	METCALF	500.0	"*"	1	60.03
× 59.97	fbus	30045	MOSSLAND	500.0	"*"	1	60.03
□ 59.97	fbus	30050	LOSBANOS	500.0	"*"	1	60.03
△ 59.97	fbus	30055	GATES	500.0	"*"	1	60.03
◇ 59.97	fbus	30060	MIDWAY	500.0	"*"	1	60.03

P0411 Project System Impact Study
2008 Summer Peak Base Case
P0411 @ 166.4MW
Humboldt Bay PP - Eureka #1 60kV line outage
3 ph 6 cyc flt @ Humboldt Bay PP 60kV bus & clr HBay-Eureka 60kV line

P0411 Project System Impact Study

Selected WECC Bus Frequency Plots

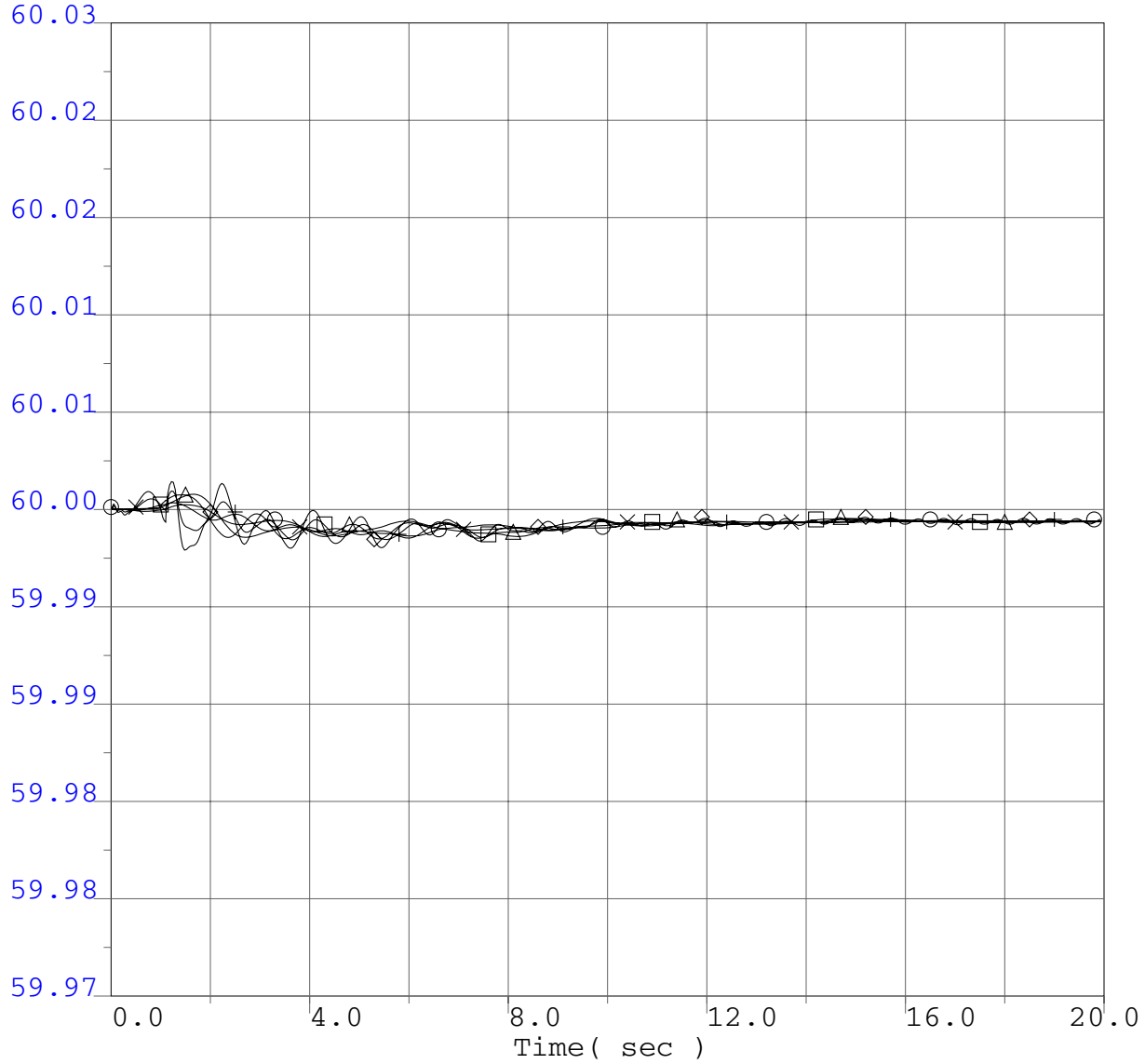

○ 59.97	fbus	14001	FOURCORN	500.0	"*"	1	60.03
× 59.97	fbus	50703	NIC500	500.0	"*"	1	60.03
□ 59.97	fbus	60240	MIDPOINT	500.0	"*"	1	60.03
△ 59.97	fbus	62012	TOWN2	500.0	"*"	1	60.03
◇ 59.97	fbus	40687	MALIN	500.0	"*"	1	60.03
+ 59.97	fbus	66340	SIGURD	345.0	"*"	1	60.03

P0411 Project System Impact Study
2008 Summer Peak Base Case
P0411 @ 166.4MW
Humboldt Bay PP - Eureka #1 60kV line outage
3 ph 6 cyc flt @ Humboldt Bay PP 60kV bus & clr HBay-Eureka 60kV line

P0411 Project System Impact Study

Selected WECC Bus Frequency Plots

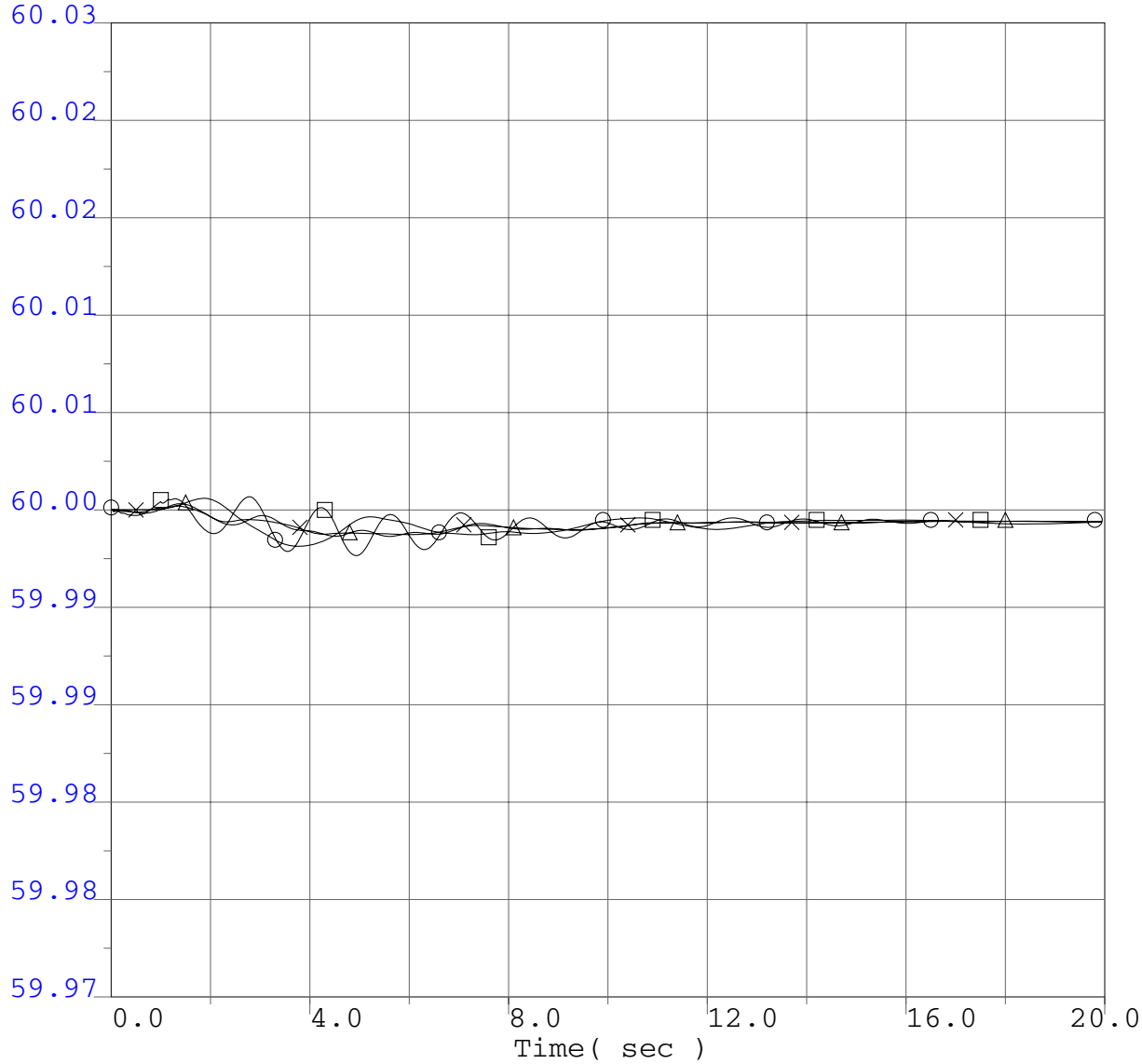

○ 59.97	fbus	54150	LANGDON2	500.0	"*"	1	60.03
× 59.97	fbus	14003	NAVAJO	500.0	"*"	1	60.03
□ 59.97	fbus	24153	VESTAL	230.0	"*"	1	60.03
△ 59.97	fbus	22360	IMPRLVLY	500.0	"*"	1	60.03

P0411 Project System Impact Study
2008 Summer Peak Base Case
P0411 @ 166.4MW
Humboldt Bay PP - Eureka #1 60kV line outage
3 ph 6 cyc flt @ Humboldt Bay PP 60kV bus & clr HBay-Eureka 60kV line

P0411 Project System Impact Study

WECC Generator Rotor Angle

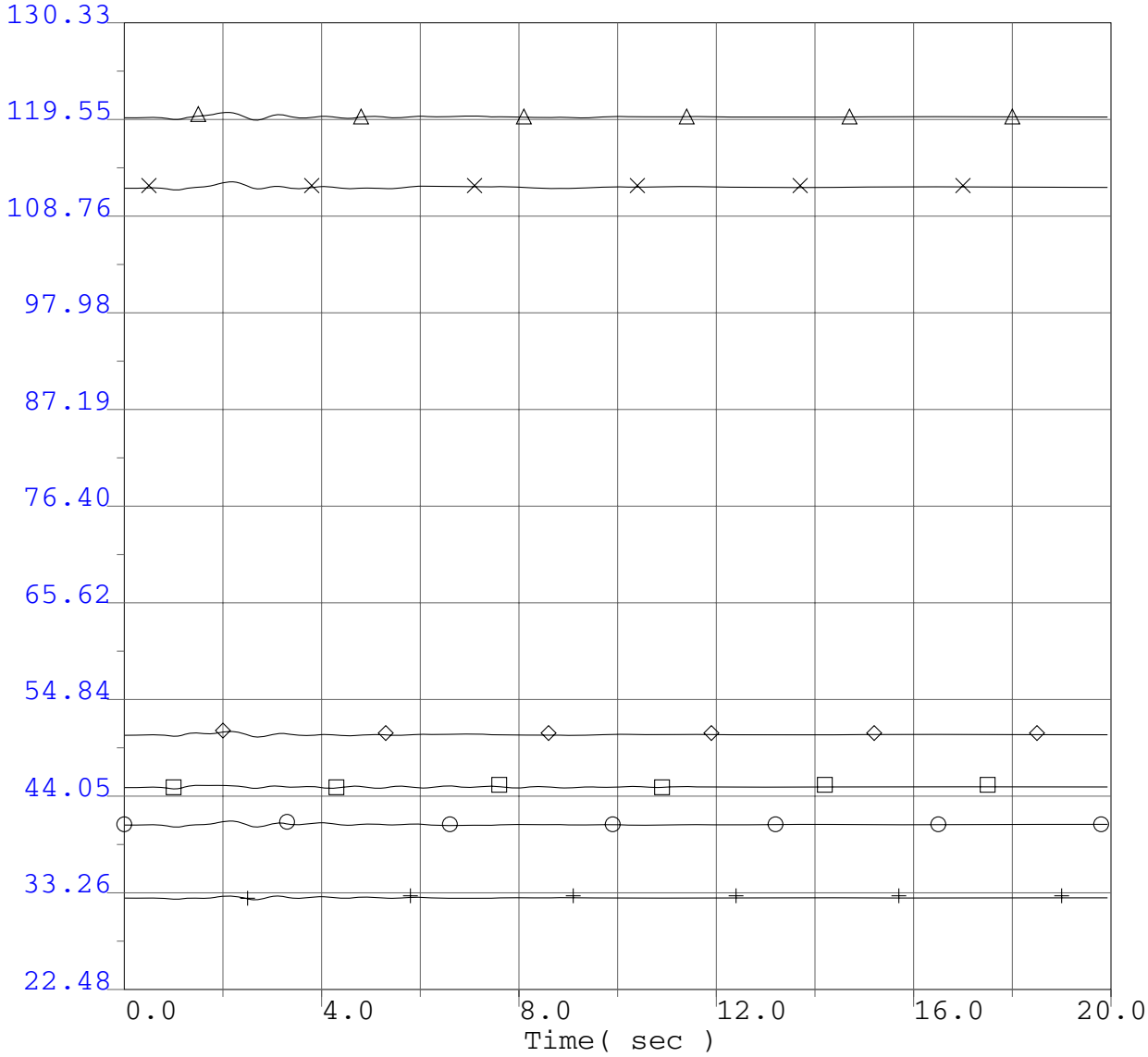

○	22.48	ang	14914	FCNGN4CC	22.0	"H" 1	130.33
×	22.48	ang	50500	GMS G6	13.8	"1" 1	130.33
□	22.48	ang	60100	BRWNL 5	13.8	"1" 1	130.33
△	22.48	ang	62048	COLSTP 3	26.0	"1" 1	130.33
◇	22.48	ang	41701	JONDAY01	13.8	"1" 1	130.33
+	22.48	ang	36411	DIABLO 1	25.0	"1" 1	130.33

P0411 Project System Impact Study
2008 Summer Peak Base Case
P0411 @ 166.4MW
Humboldt Bay PP - Eureka #1 60kV line outage
3 ph 6 cyc flt @ Humboldt Bay PP 60kV bus & clr HBay-Eureka 60kV line

P0411 Project System Impact Study

WECC Generator Rotor Angle

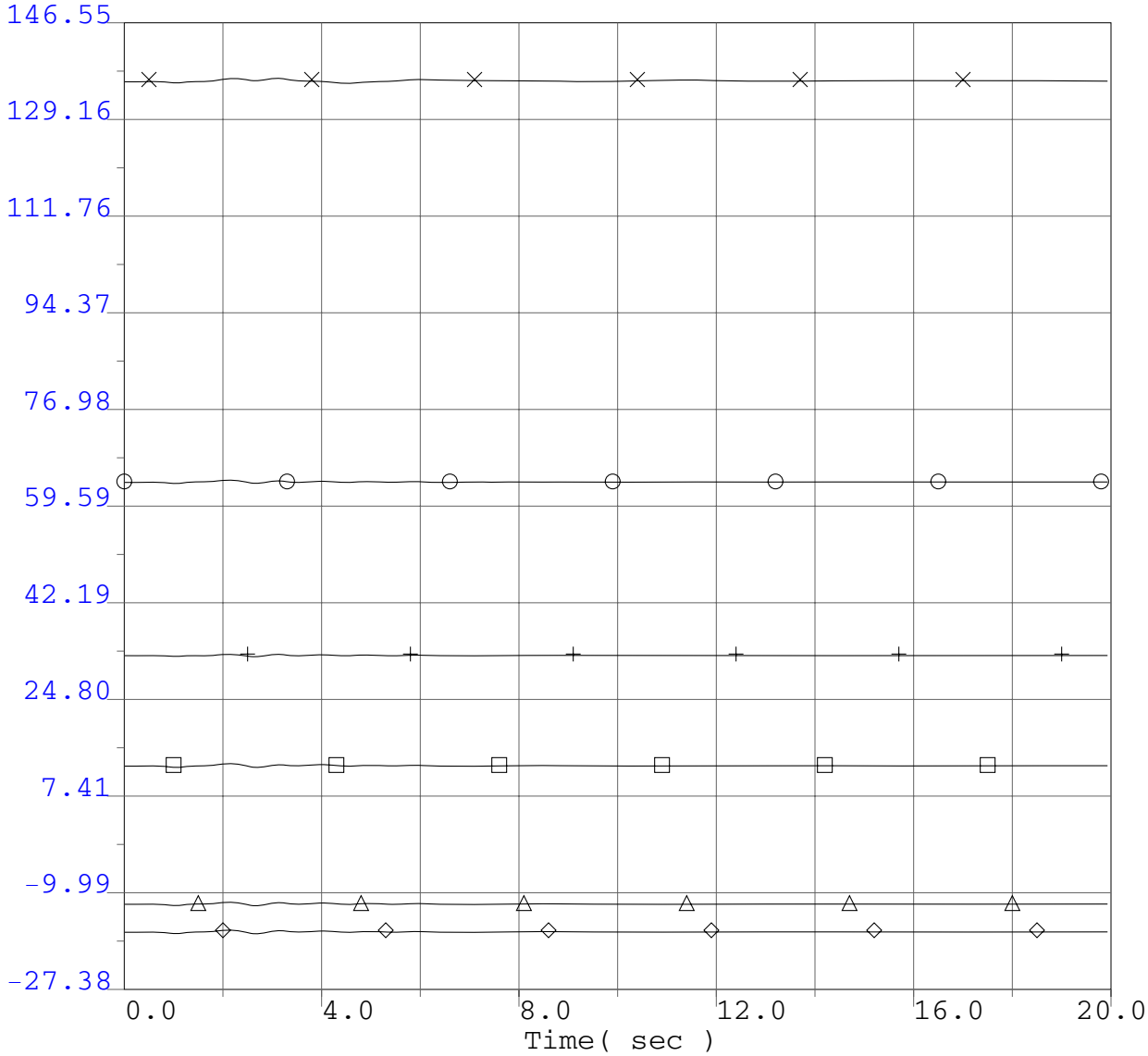

○	-27.38	ang	65490	EHUNTR 1	24.0	"1" 1	146.55
×	-27.38	ang	54280	SUND#2GN	18.0	"2" 1	146.55
□	-27.38	ang	79151	GLENC3-4	13.8	"3" 1	146.55
△	-27.38	ang	24130	S.ONOFR3	22.0	"3" 1	146.55
◇	-27.38	ang	22244	ENCINA 5	24.0	"1" 1	146.55
+	-27.38	ang	36411	DIABLO 1	25.0	"1" 1	146.55

P0411 Project System Impact Study
2008 Summer Peak Base Case
P0411 @ 166.4MW
Humboldt Bay PP - Eureka #1 60kV line outage
3 ph 6 cyc flt @ Humboldt Bay PP 60kV bus & clr HBay-Eureka 60kV line

P0411 Project System Impact Study

Selected PG&E Transmission Line Flows (MW)

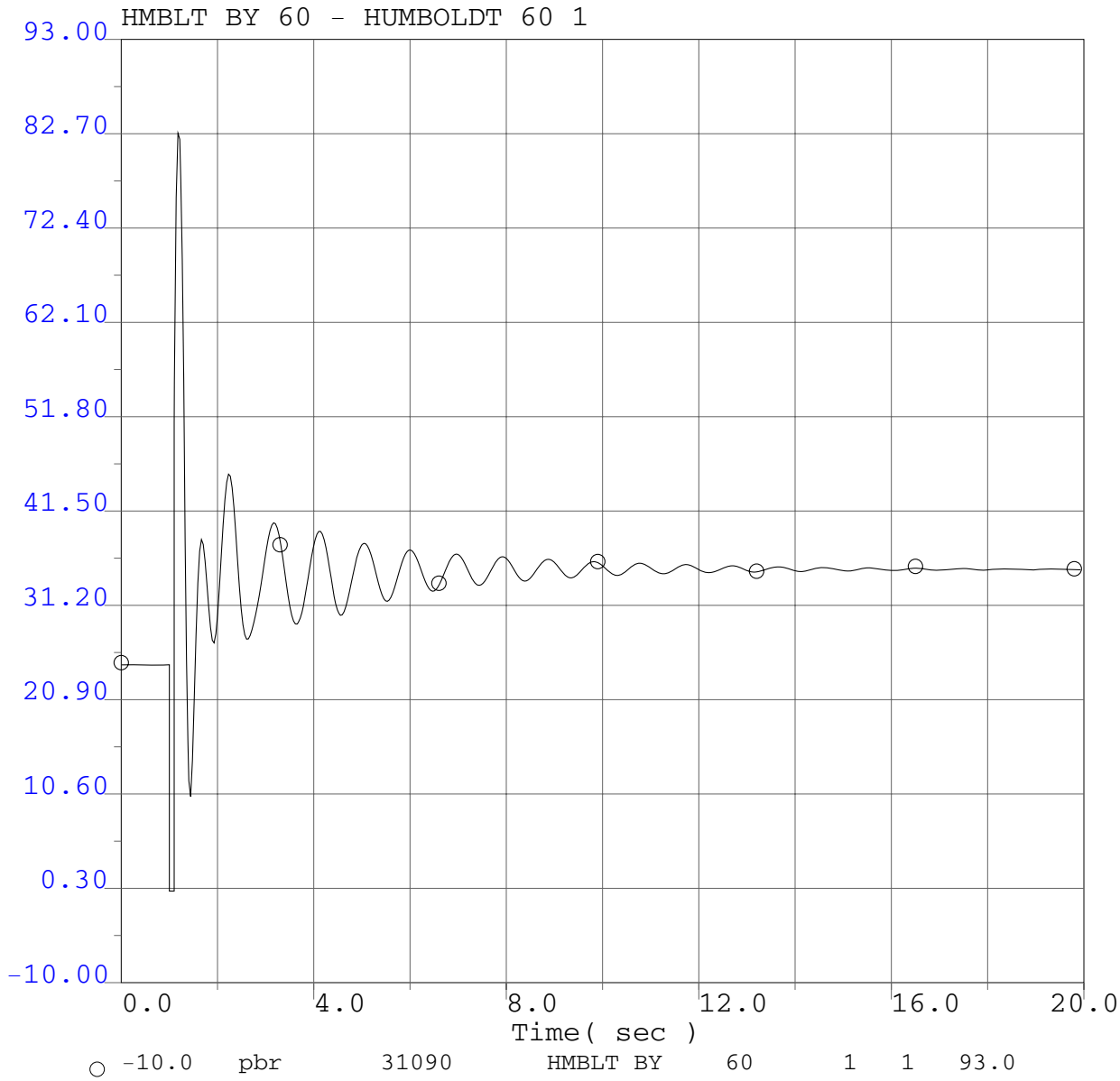

P0411 Project System Impact Study
2008 Summer Peak Base Case
P0411 @ 166.4MW
Humboldt Bay PP - Eureka #1 60kV line outage
3 ph 6 cyc flt @ Humboldt Bay PP 60kV bus & clr HBay-Eureka 60kV line

P0411 Project System Impact Study

Selected PG&E Transmission Line Flows (MW)

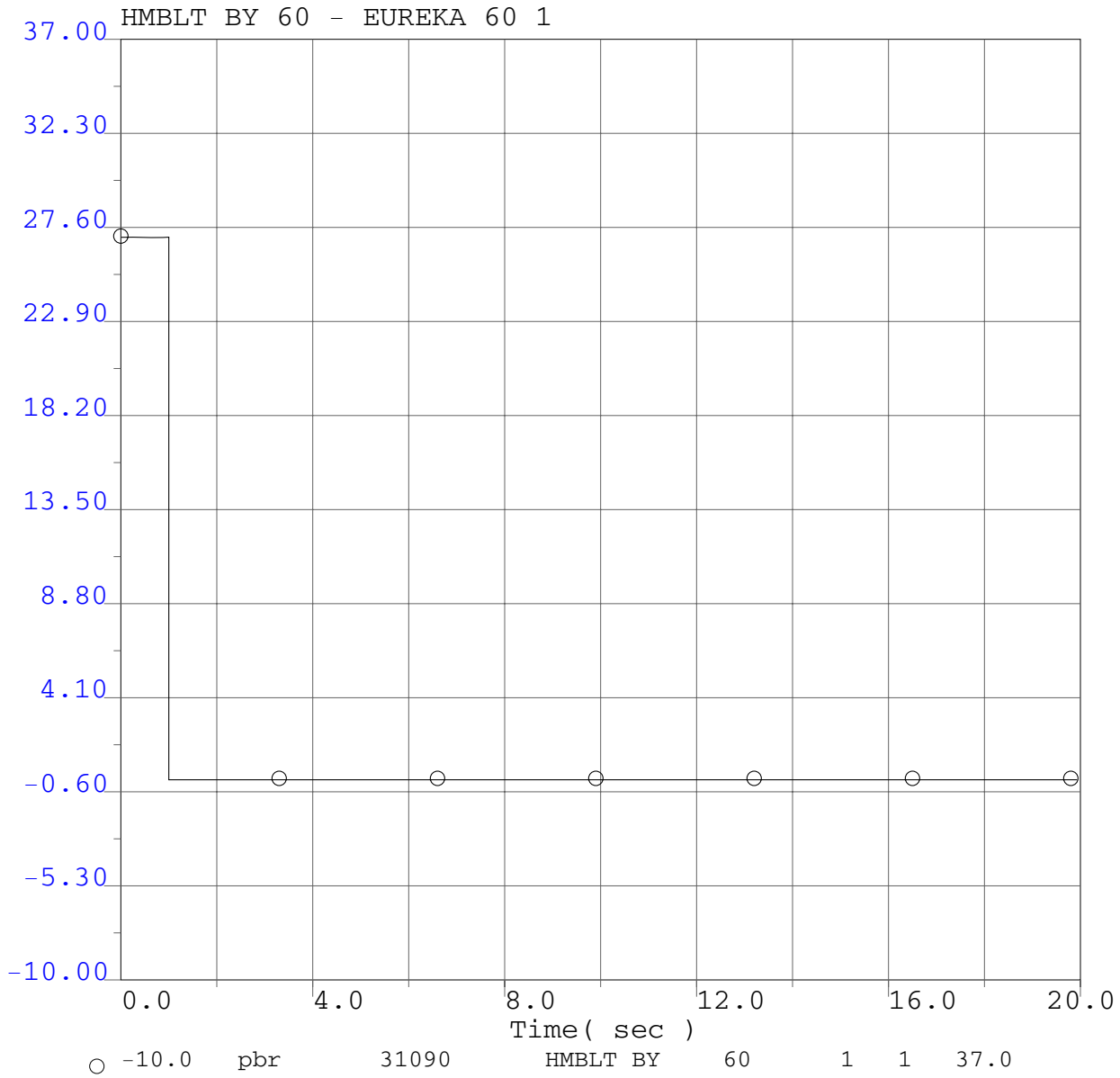

P0411 Project System Impact Study
2008 Summer Peak Base Case
P0411 @ 166.4MW
Humboldt Bay PP - Eureka #1 60kV line outage
3 ph 6 cyc flt @ Humboldt Bay PP 60kV bus & clr HBay-Eureka 60kV line

P0411 Project System Impact Study

Selected PG&E Transmission Line Flows (MW)

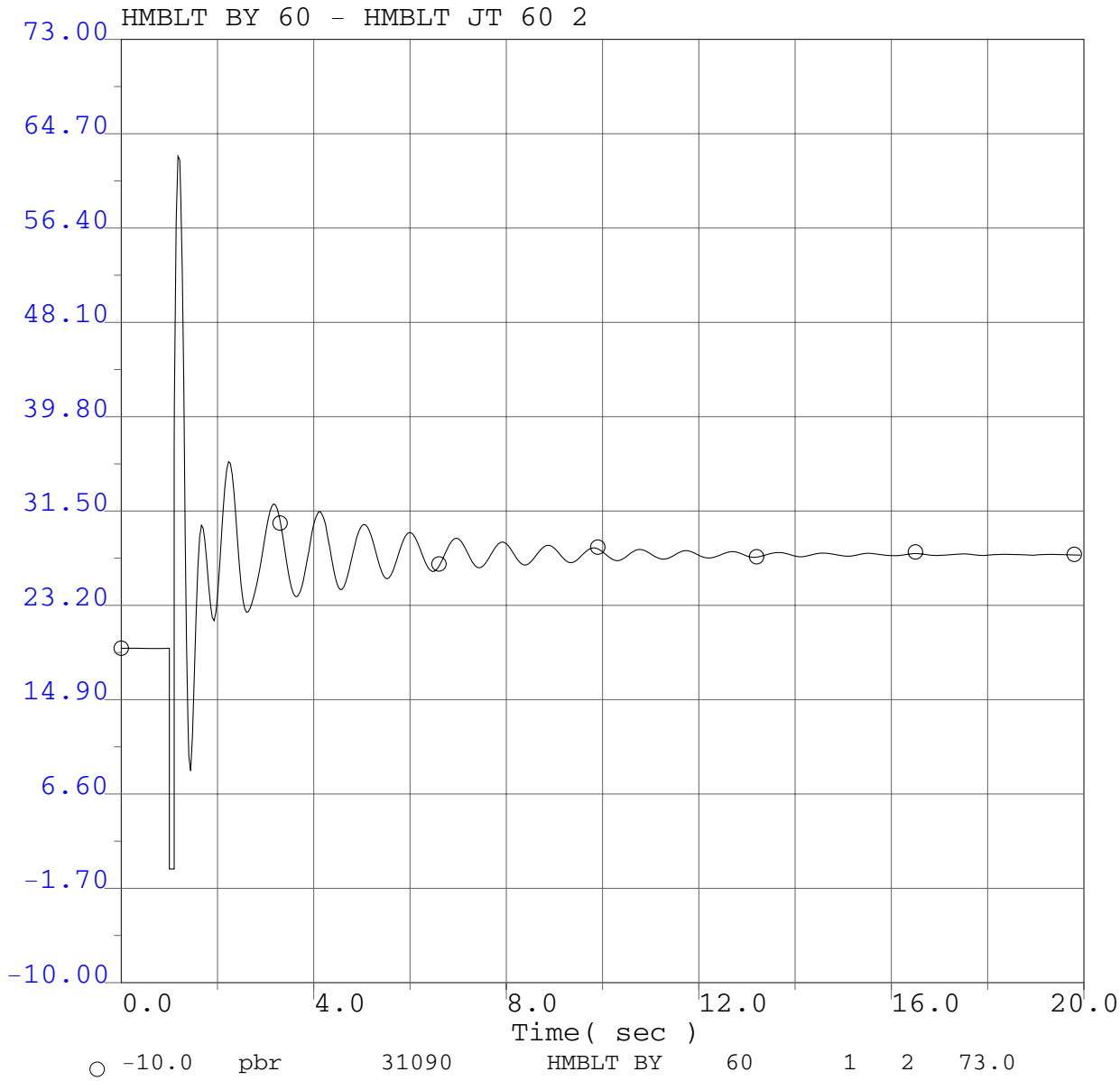

P0411 Project System Impact Study
2008 Summer Peak Base Case
P0411 @ 166.4MW
Humboldt Bay PP - Eureka #1 60kV line outage
3 ph 6 cyc flt @ Humboldt Bay PP 60kV bus & clr HBay-Eureka 60kV line

P0411 Project System Impact Study

Selected PG&E Transmission Line Flows (MW)

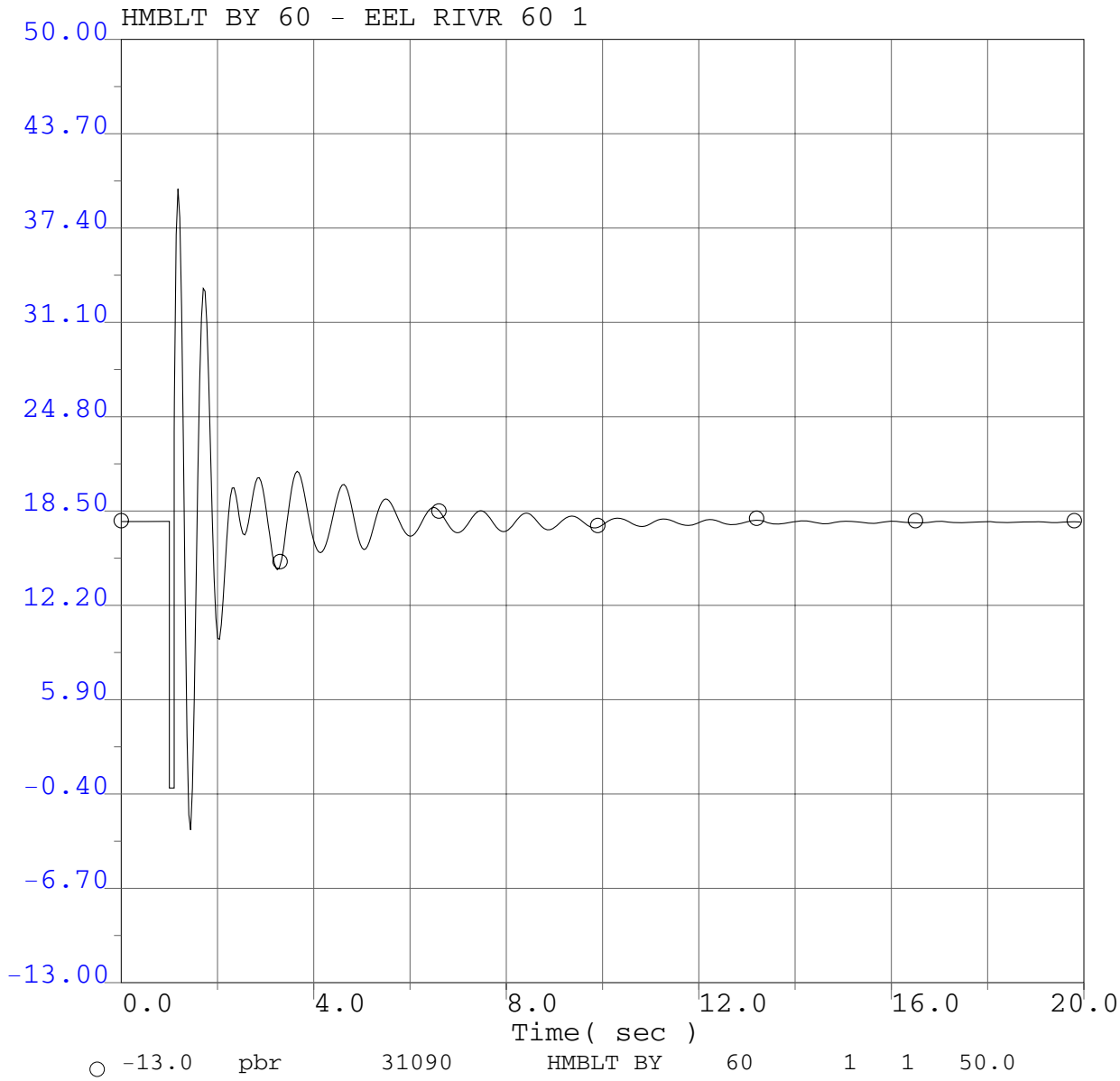

P0411 Project System Impact Study
2008 Summer Peak Base Case
P0411 @ 166.4MW
Humboldt Bay PP - Eureka #1 60kV line outage
3 ph 6 cyc flt @ Humboldt Bay PP 60kV bus & clr HBay-Eureka 60kV line

P0411 Project System Impact Study

Selected PG&E Transmission Line Flows (MW)

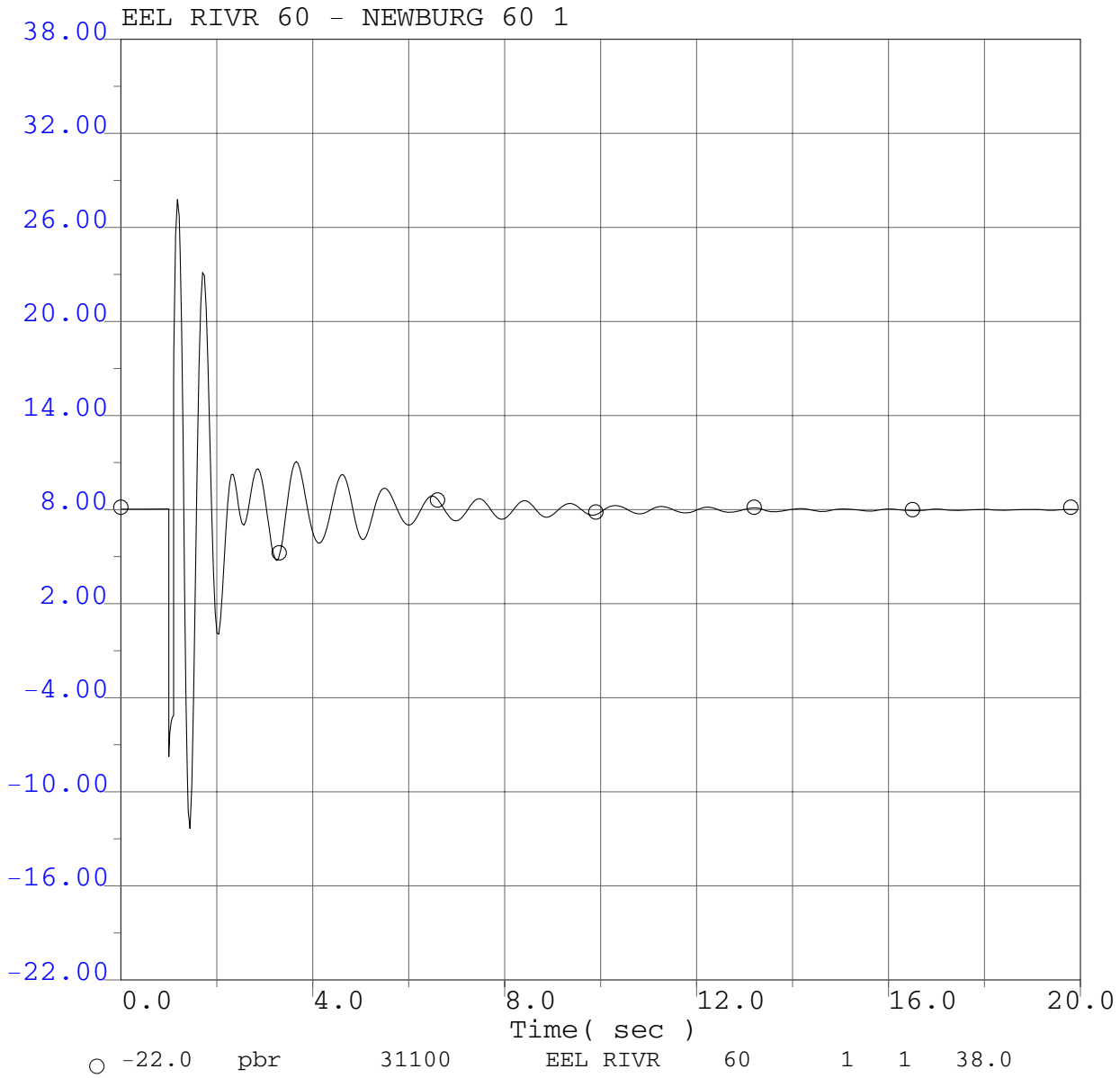

P0411 Project System Impact Study
2008 Summer Peak Base Case
P0411 @ 166.4MW
Humboldt Bay PP - Eureka #1 60kV line outage
3 ph 6 cyc flt @ Humboldt Bay PP 60kV bus & clr HBay-Eureka 60kV line

P0411 Project System Impact Study

Selected PG&E Transmission Line Flows (MW)

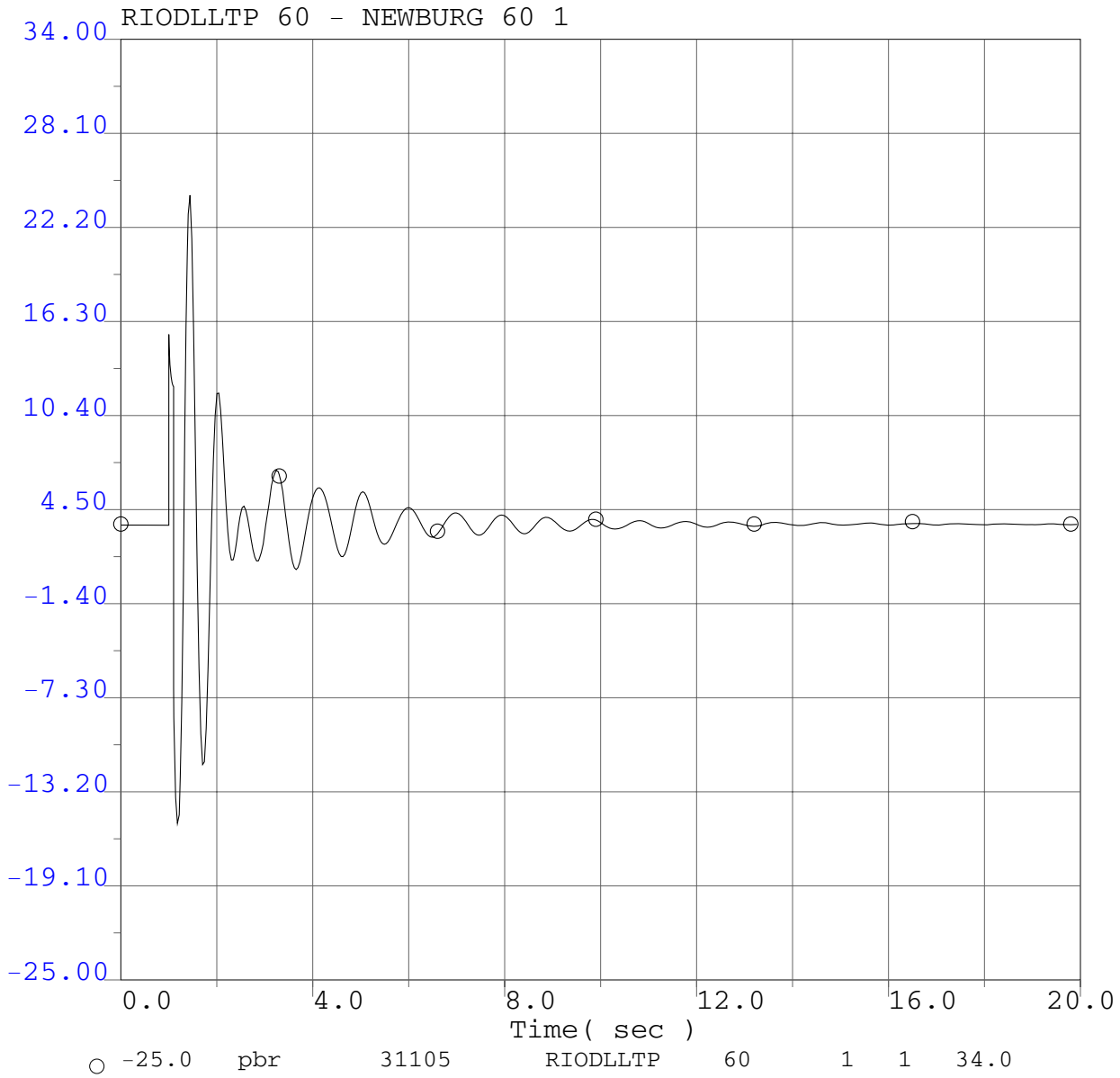

P0411 Project System Impact Study
2008 Summer Peak Base Case
P0411 @ 166.4MW
Humboldt Bay PP - Eureka #1 60kV line outage
3 ph 6 cyc flt @ Humboldt Bay PP 60kV bus & clr HBay-Eureka 60kV line

P0411 Project System Impact Study

Selected PG&E Transmission Line Flows (MW)

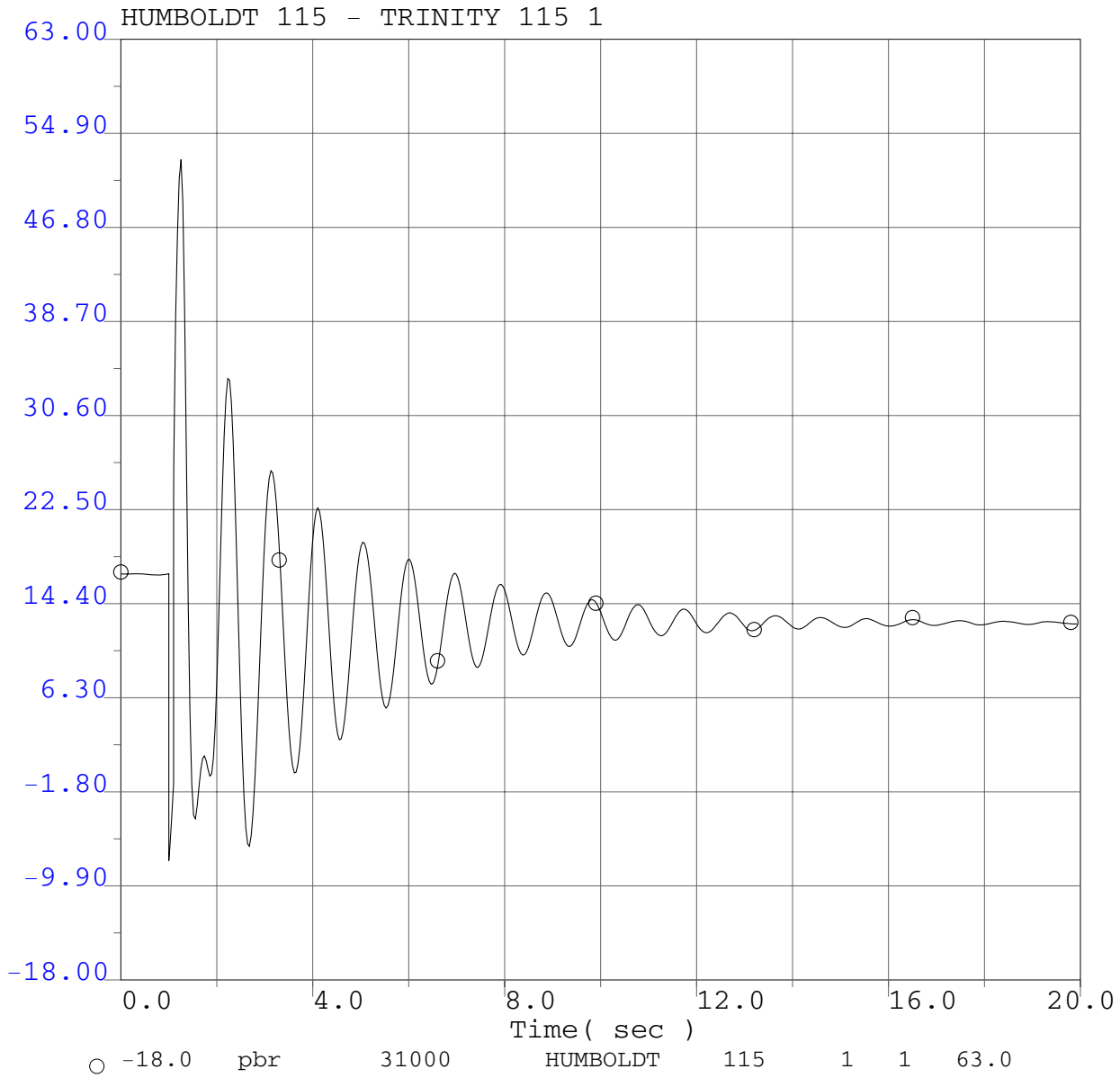

P0411 Project System Impact Study
2008 Summer Peak Base Case
P0411 @ 166.4MW
Humboldt Bay PP - Eureka #1 60kV line outage
3 ph 6 cyc flt @ Humboldt Bay PP 60kV bus & clr HBay-Eureka 60kV line

P0411 Project System Impact Study

Selected PG&E Transmission Line Flows (MW)

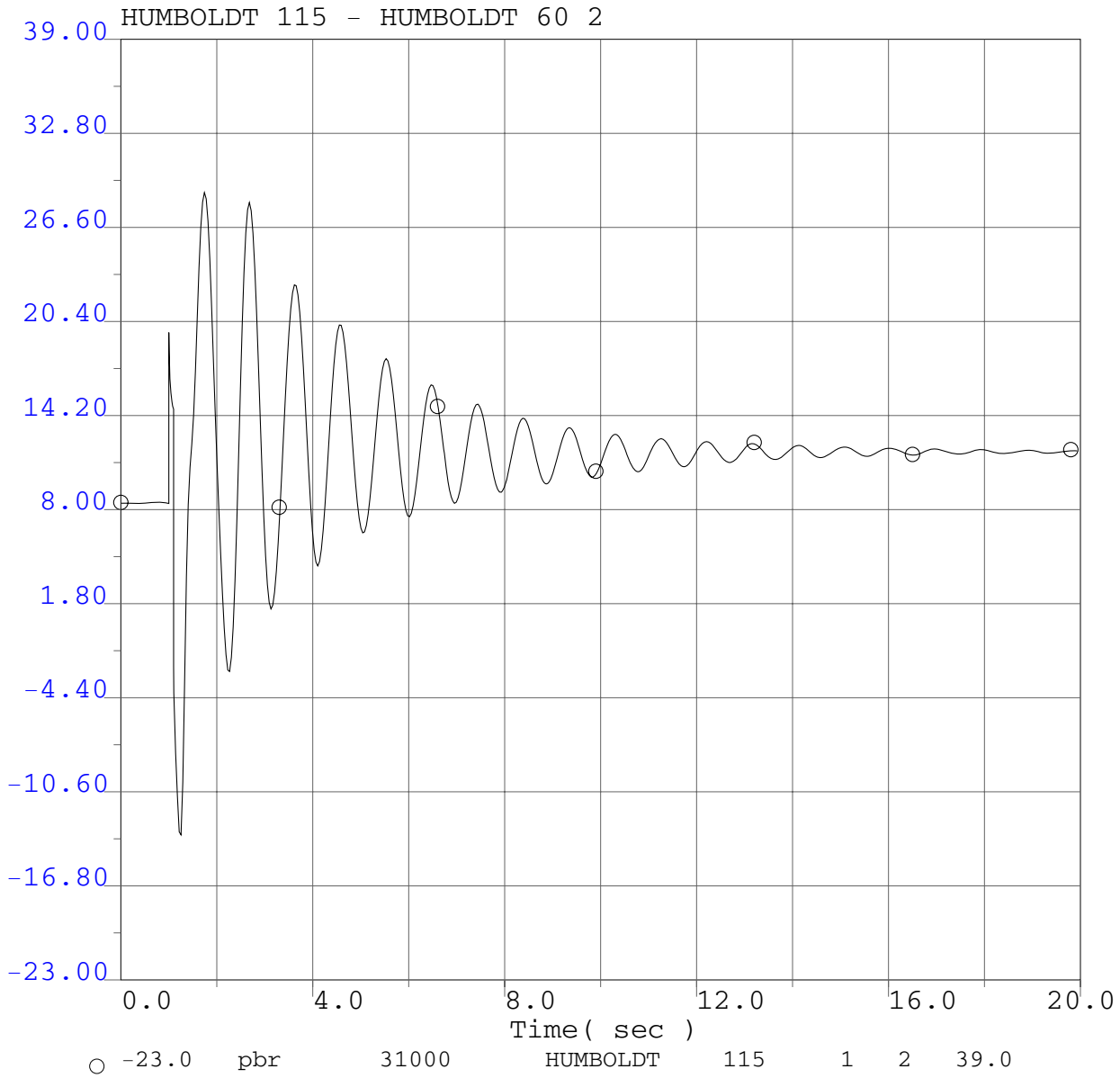

P0411 Project System Impact Study
2008 Summer Peak Base Case
P0411 @ 166.4MW
Humboldt Bay PP - Eureka #1 60kV line outage
3 ph 6 cyc flt @ Humboldt Bay PP 60kV bus & clr HBay-Eureka 60kV line

P0411 Project System Impact Study

Selected PG&E Transmission Line Flows (MW)

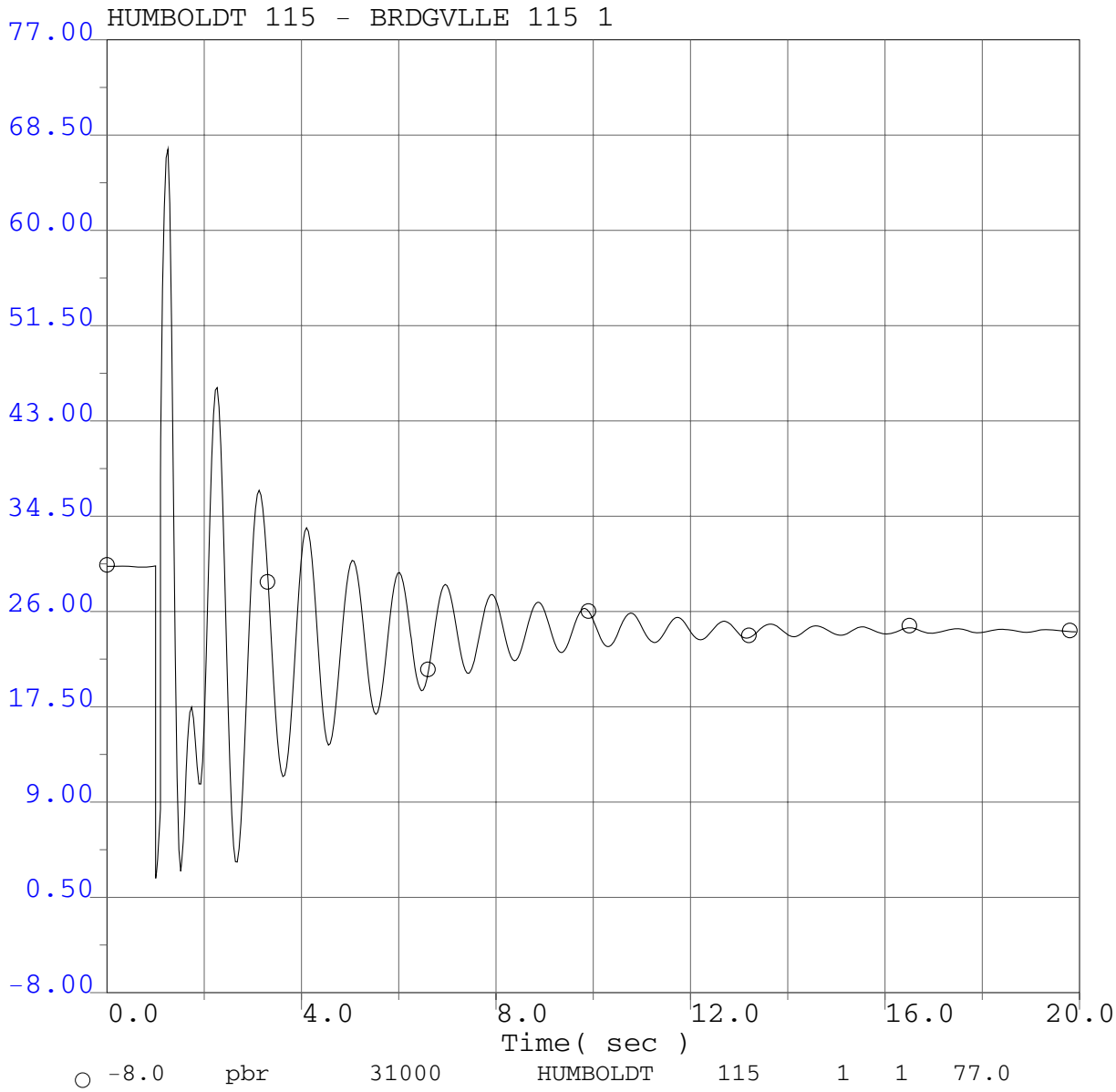

P0411 Project System Impact Study
2008 Summer Peak Base Case
P0411 @ 166.4MW
Humboldt Bay PP - Eureka #1 60kV line outage
3 ph 6 cyc flt @ Humboldt Bay PP 60kV bus & clr HBay-Eureka 60kV line

P0411 Project System Impact Study

Selected PG&E Transmission Line Flows (MW)

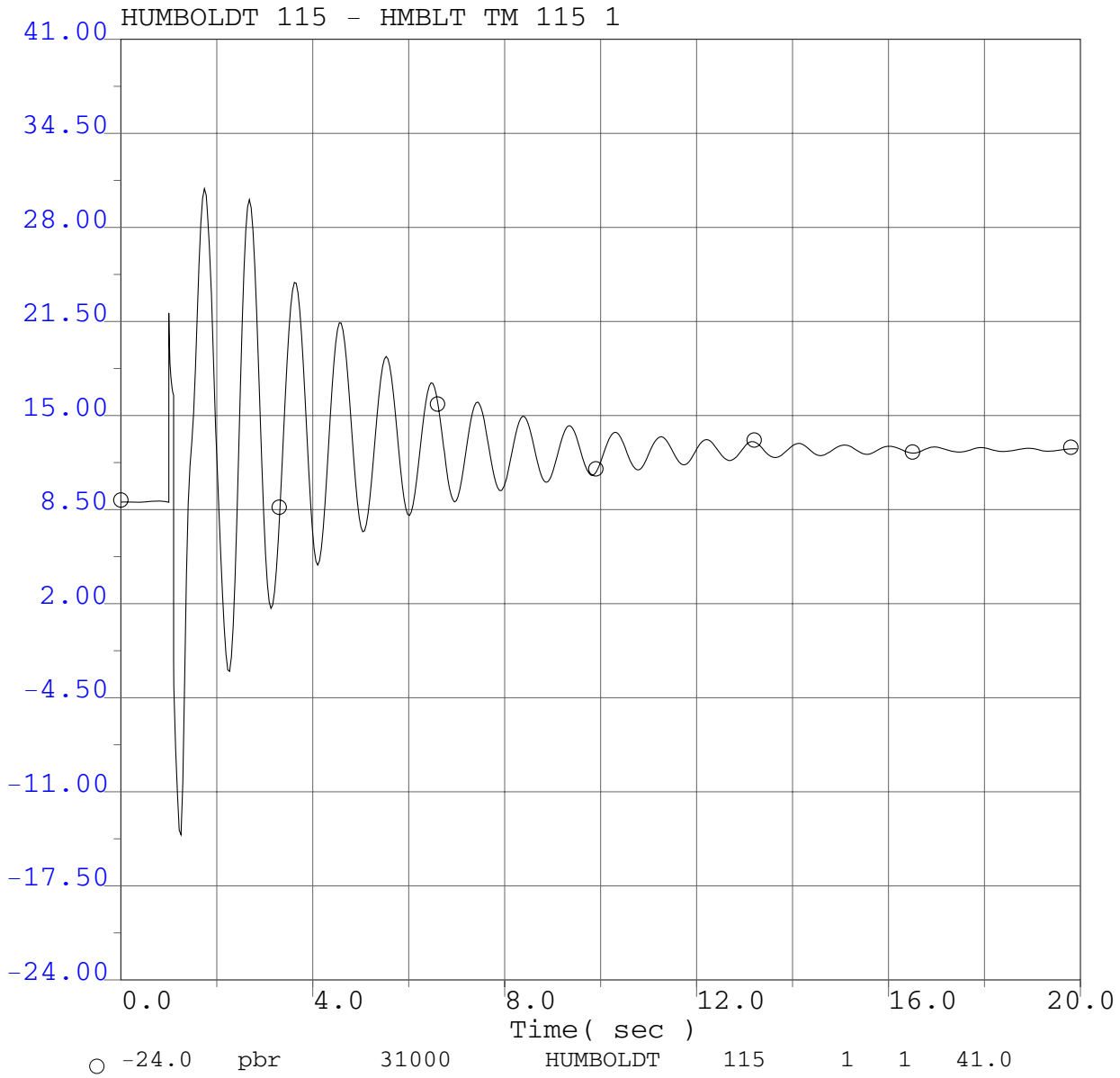

P0411 Project System Impact Study
2008 Summer Peak Base Case
P0411 @ 166.4MW
Humboldt Bay PP - Eureka #1 60kV line outage
3 ph 6 cyc flt @ Humboldt Bay PP 60kV bus & clr HBay-Eureka 60kV line

P0411 Project System Impact Study

Selected PG&E Bus Voltage Plots Adjacent to Fault

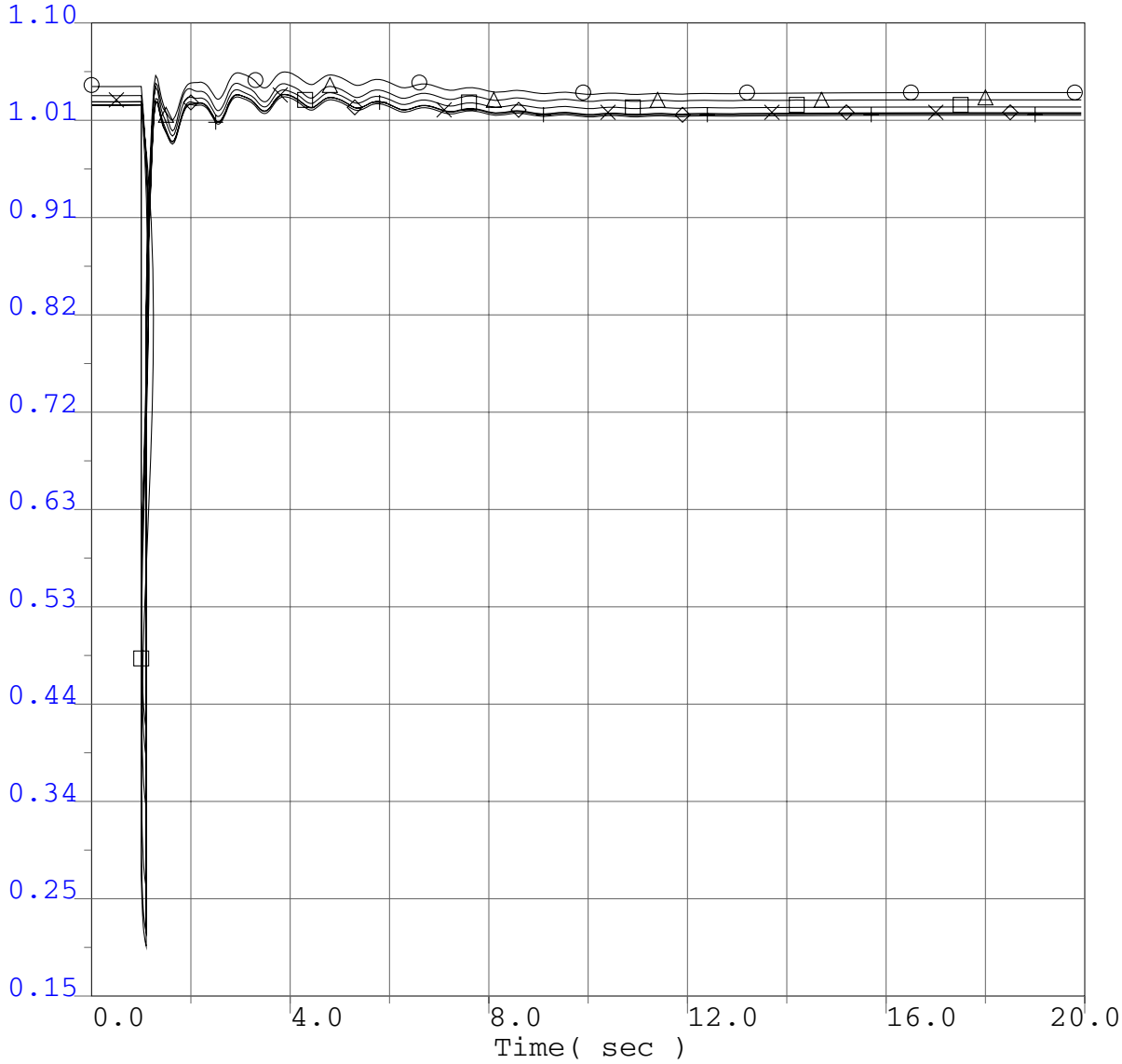

○	0.15	vbul	31090	HMBLT BY	60.0	"*"	1	1.1
×	0.15	vbus	31080	HUMBOLDT	60.0	"*"	1	1.1
□	0.15	vbul	31102	NEWBURG	60.0	"*"	1	1.1
△	0.15	vbus	31105	RIODLLTP	60.0	"*"	1	1.1
◇	0.15	vbul	31086	EUREKA	60.0	"*"	1	1.1
+	0.15	vbul	31082	HARRIS	60.0	"*"	1	1.1

P0411 Project System Impact Study
2008 Summer Peak Base Case
P0411 @ 166.4MW
Humboldt Bay PP - Bumboldt #1 115kV line outage
3 phase 6 cycle fault at Humboldt Bay PP 115kV bus and clear HBay-Humb #1 115kV

P0411 Project System Impact Study

Selected PG&E Bus Frequency Plots Adjacent to Fault

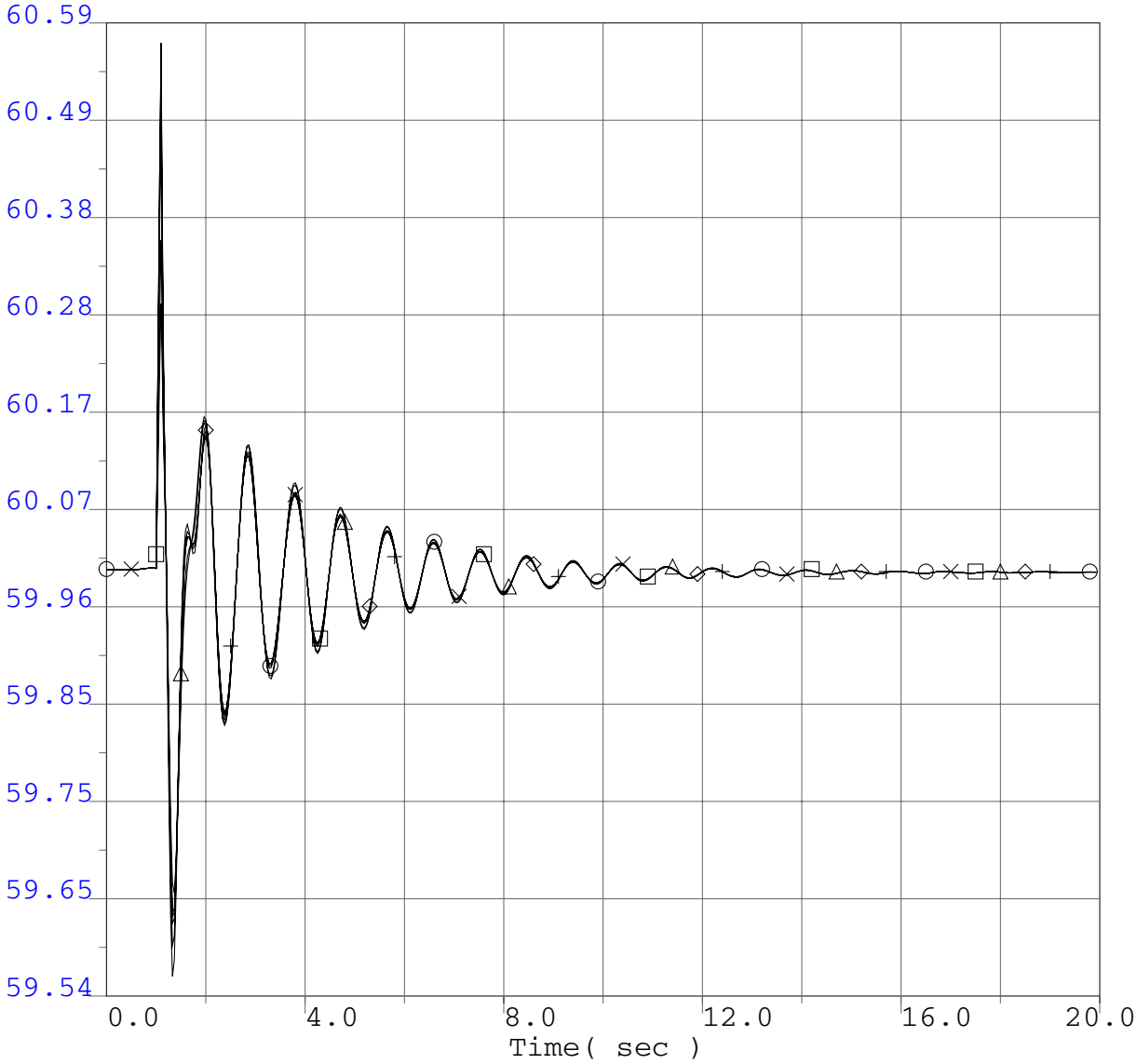

○	59.54	fbul	31090	HMBLT BY	60.0	"*" 1	60.59
×	59.54	fbus	31080	HUMBOLDT	60.0	"*" 1	60.59
□	59.54	fbul	31102	NEWBURG	60.0	"*" 1	60.59
△	59.54	fbus	31105	RIODLLTP	60.0	"*" 1	60.59
◇	59.54	fbul	31086	EUREKA	60.0	"*" 1	60.59
+	59.54	fbul	31082	HARRIS	60.0	"*" 1	60.59

P0411 Project System Impact Study
2008 Summer Peak Base Case
P0411 @ 166.4MW
Humboldt Bay PP - Bumboldt #1 115kV line outage
3 phase 6 cycle fault at Humboldt Bay PP 115kV bus and clear HBay-Humb #1 115kV

P0411 Project System Impact Study

Project Generator Terminal Voltages

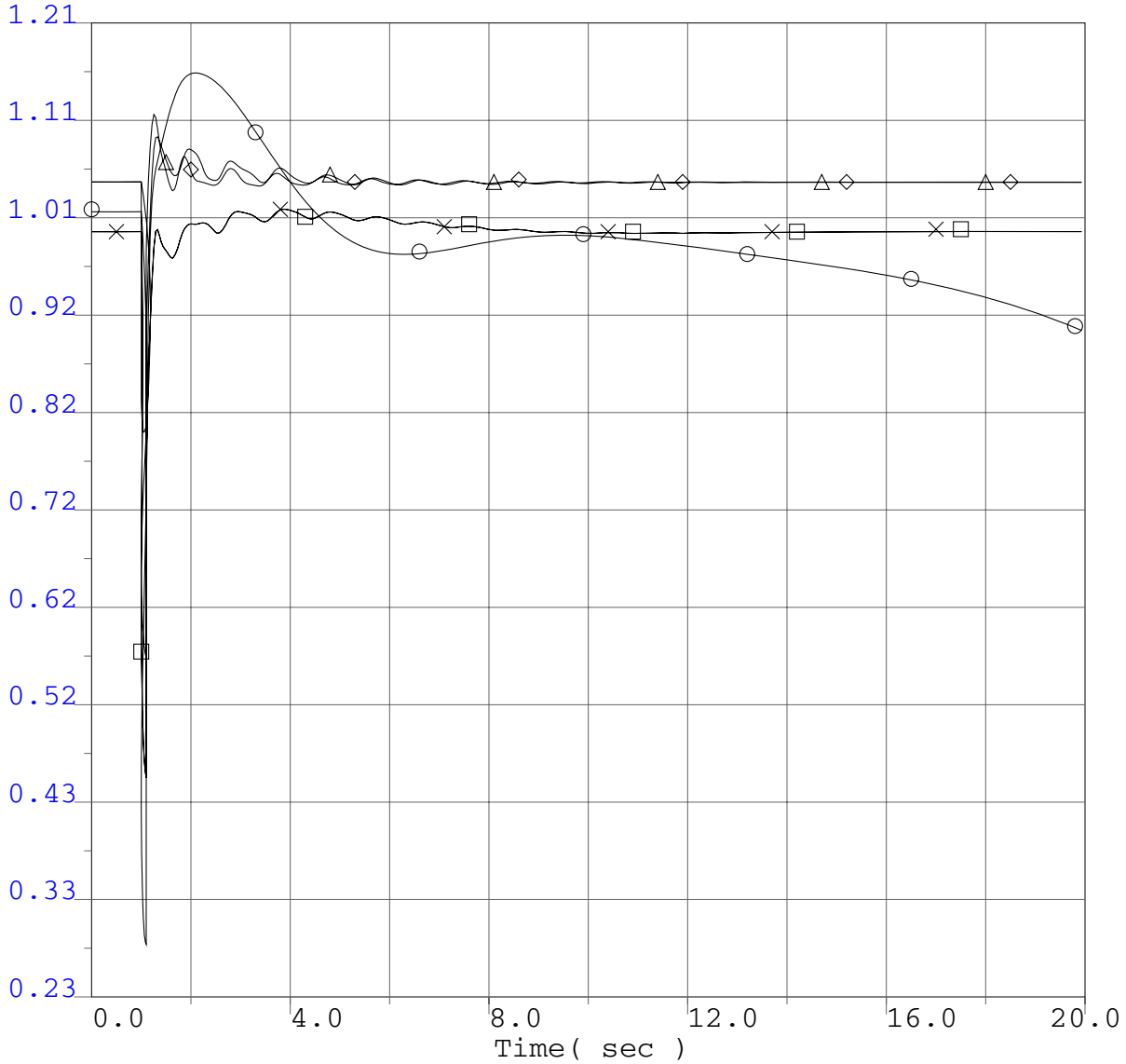

○	0.23	vt	31180	P0411G1	13.8	"1" 1	1.21
×	0.23	vt	31181	P0411G2	13.8	"5" 1	1.21
□	0.23	vt	31182	P0411G3	13.8	"8" 1	1.21
△	0.23	vt	31150	FAIRHAVN	13.8	"1" 1	1.21
◇	0.23	vt	31158	LP SAMOA	12.5	"1" 1	1.21

P0411 Project System Impact Study
2008 Summer Peak Base Case
P0411 @ 166.4MW
Humboldt Bay PP - Bumboldt #1 115kV line outage
3 phase 6 cycle fault at Humboldt Bay PP 115kV bus and clear HBay-Humb #1 115kV

P0411 Project System Impact Study

Project Generator Rotor Speed

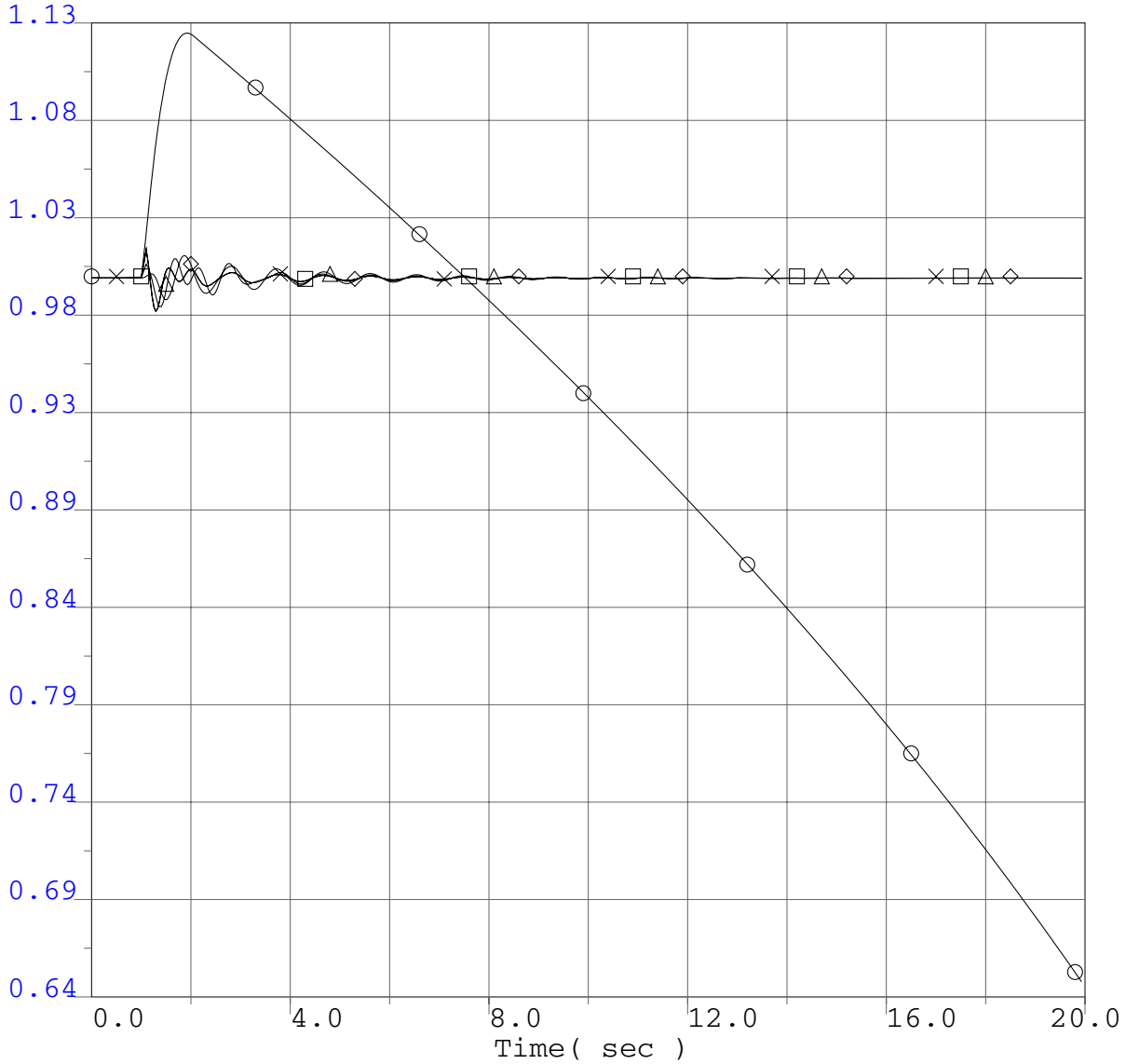

○	0.644	spd	31180	P0411G1	13.8	"1" 1	1.1263
×	0.644	spd	31181	P0411G2	13.8	"5" 1	1.1263
□	0.644	spd	31182	P0411G3	13.8	"8" 1	1.1263
△	0.644	spd	31150	FAIRHAVN	13.8	"1" 1	1.1263
◇	0.644	spd	31158	LP SAMOA	12.5	"1" 1	1.1263

P0411 Project System Impact Study
2008 Summer Peak Base Case
P0411 @ 166.4MW
Humboldt Bay PP - Bumboldt #1 115kV line outage
3 phase 6 cycle fault at Humboldt Bay PP 115kV bus and clear HBay-Humb #1 115kV

P0411 Project System Impact Study

Project Generator Terminal Power

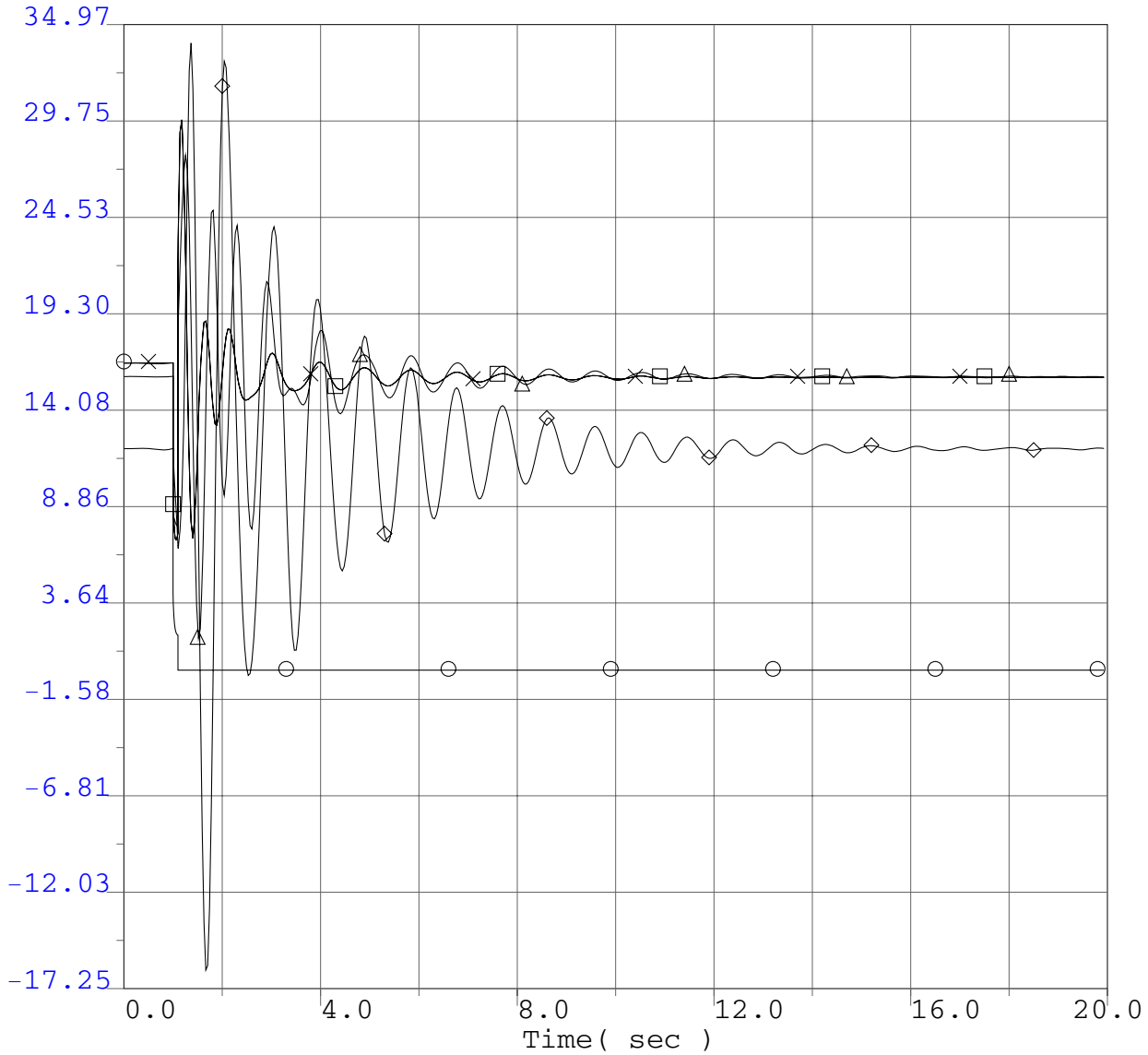

○	-17.25	pg	31180	P0411G1	13.8	"1" 1	34.97
×	-17.25	pg	31181	P0411G2	13.8	"5" 1	34.97
□	-17.25	pg	31182	P0411G3	13.8	"8" 1	34.97
△	-17.25	pg	31150	FAIRHAVN	13.8	"1" 1	34.97
◇	-17.25	pg	31158	LP SAMOA	12.5	"1" 1	34.97

P0411 Project System Impact Study
2008 Summer Peak Base Case
P0411 @ 166.4MW
Humboldt Bay PP - Bumboldt #1 115kV line outage
3 phase 6 cycle fault at Humboldt Bay PP 115kV bus and clear HBay-Humb #1 115kV

P0411 Project System Impact Study

Project Generator Terminal Reactive Power

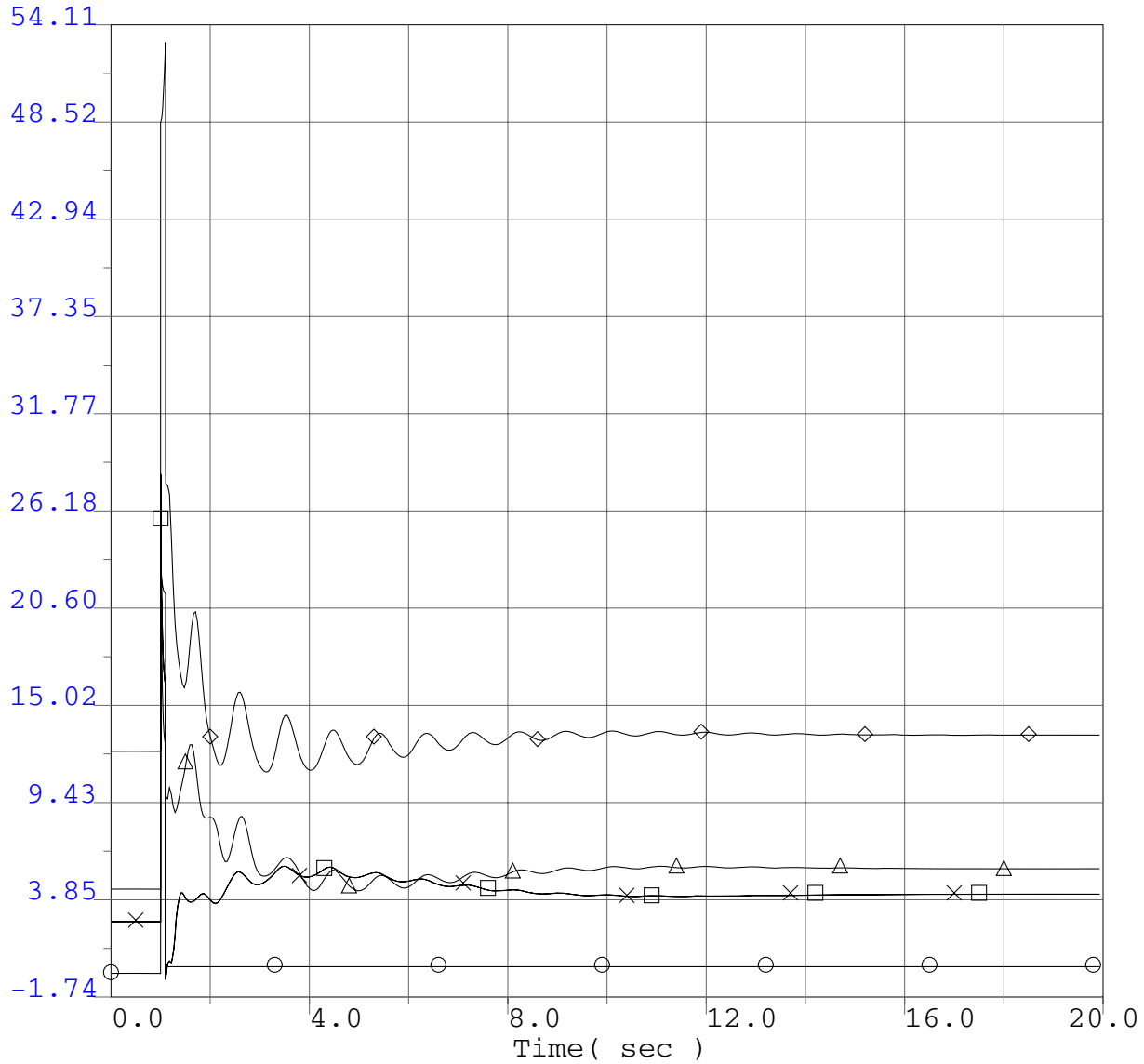

○	-1.74	qg	31180	P0411G1	13.8	"1" 1	54.11
×	-1.74	qg	31181	P0411G2	13.8	"5" 1	54.11
□	-1.74	qg	31182	P0411G3	13.8	"8" 1	54.11
△	-1.74	qg	31150	FAIRHAVN	13.8	"1" 1	54.11
◇	-1.74	qg	31158	LP SAMOA	12.5	"1" 1	54.11

P0411 Project System Impact Study
2008 Summer Peak Base Case
P0411 @ 166.4MW
Humboldt Bay PP - Bumboldt #1 115kV line outage
3 phase 6 cycle fault at Humboldt Bay PP 115kV bus and clear HBay-Humb #1 115kV

P0411 Project System Impact Study

Selected WECC Bus Voltage Plots

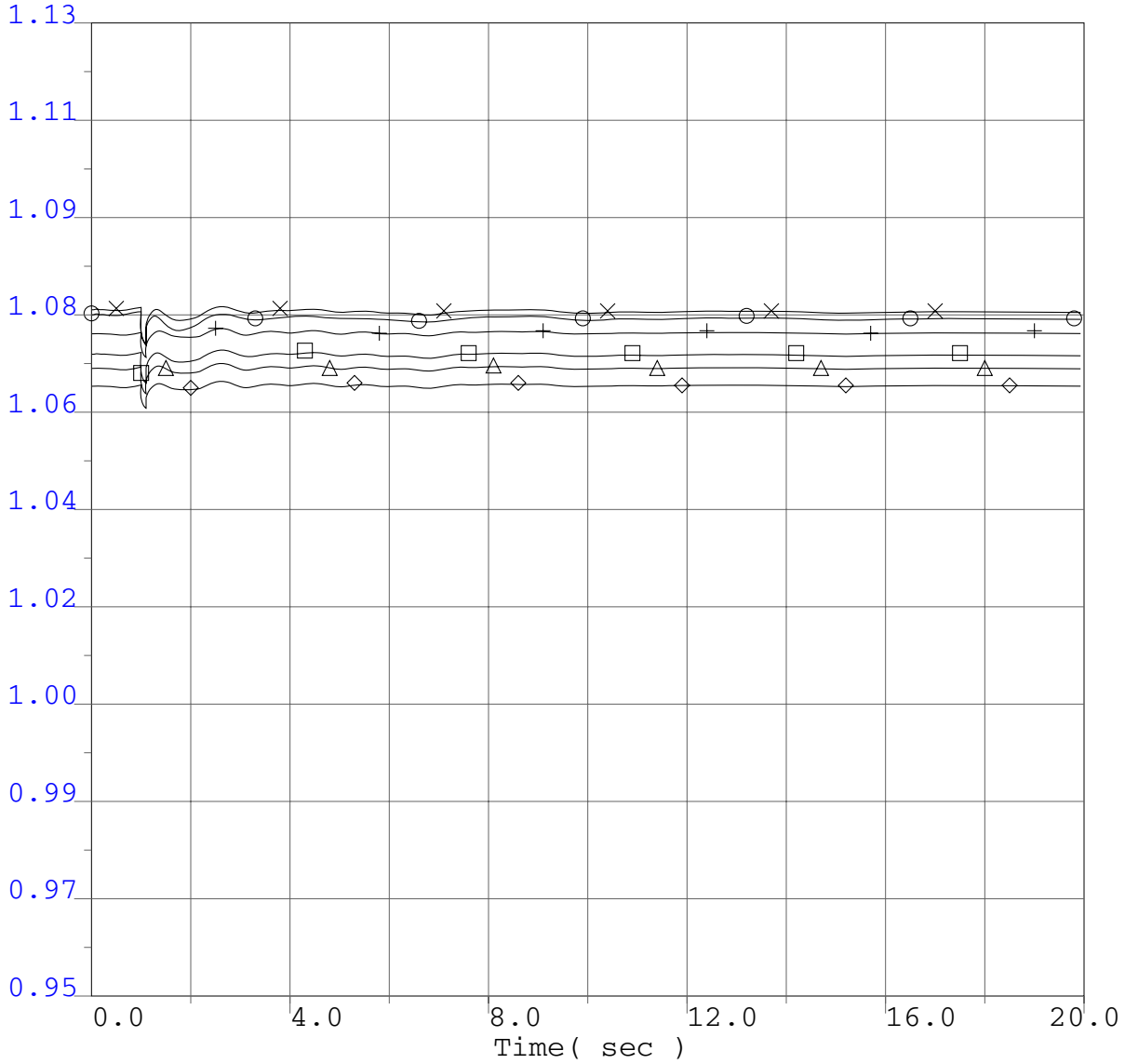

○	0.95	vbus	40687	MALIN	500.0	"*" 1	1.13
×	0.95	vbus	30005	ROUND MT	500.0	"*" 1	1.13
□	0.95	vbus	30015	TABLE MT	500.0	"*" 1	1.13
△	0.95	vbus	30030	VACA-DIX	500.0	"*" 1	1.13
◇	0.95	vbus	30040	TESLA	500.0	"*" 1	1.13
+	0.95	vbus	30035	TRACY	500.0	"*" 1	1.13

P0411 Project System Impact Study
2008 Summer Peak Base Case
P0411 @ 166.4MW
Humboldt Bay PP - Bumboldt #1 115kV line outage
3 phase 6 cycle fault at Humboldt Bay PP 115kV bus and clear HBay-Humb #1 115kV

P0411 Project System Impact Study

Selected WECC Bus Voltage Plots

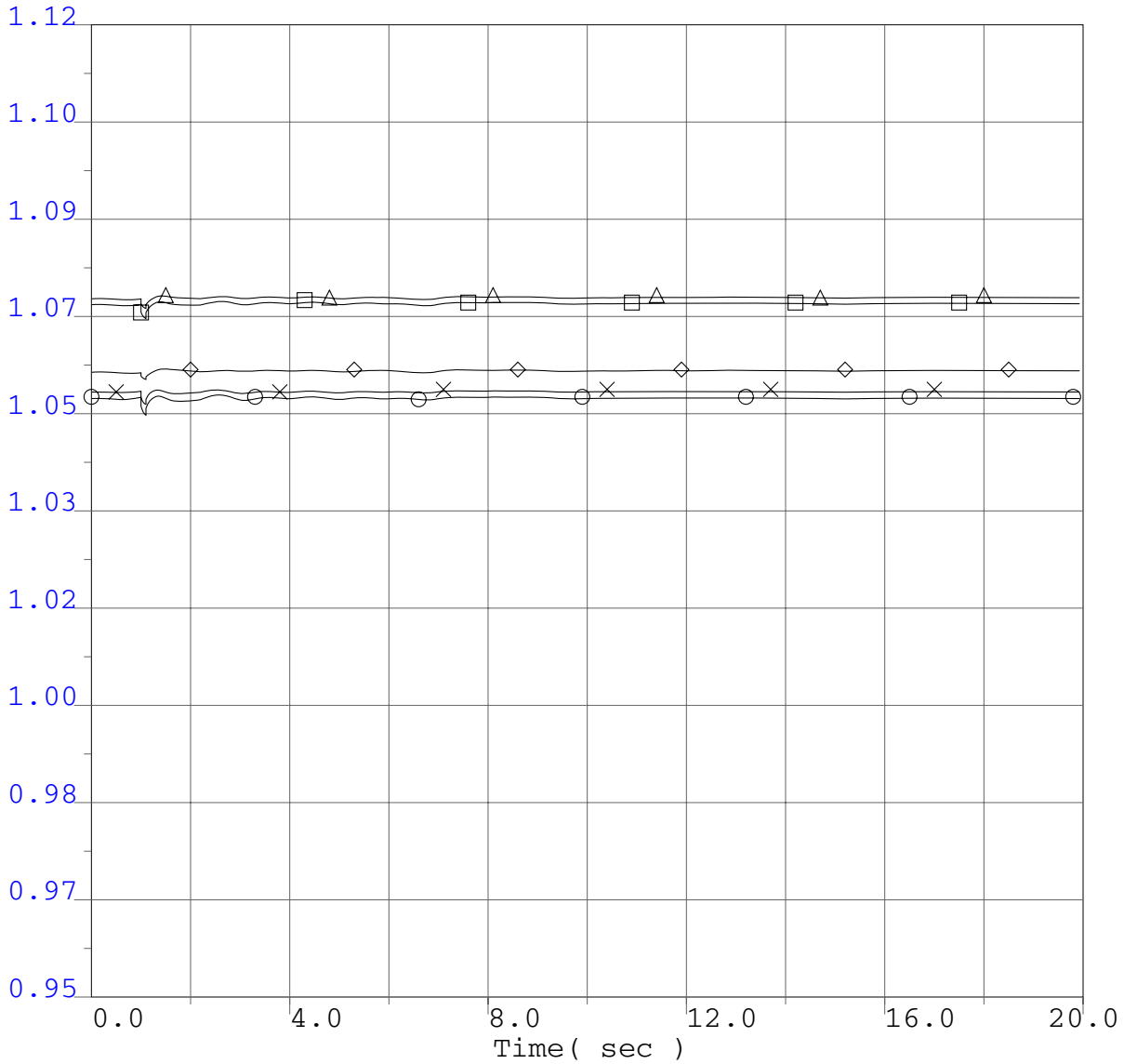

○ 0.95	vbus	30042	METCALF	500.0	"*"	1	1.12
× 0.95	vbus	30045	MOSSLAND	500.0	"*"	1	1.12
□ 0.95	vbus	30050	LOSBANOS	500.0	"*"	1	1.12
△ 0.95	vbus	30055	GATES	500.0	"*"	1	1.12
◇ 0.95	vbus	30060	MIDWAY	500.0	"*"	1	1.12

P0411 Project System Impact Study
2008 Summer Peak Base Case
P0411 @ 166.4MW
Humboldt Bay PP - Bumboldt #1 115kV line outage
3 phase 6 cycle fault at Humboldt Bay PP 115kV bus and clear HBay-Humb #1 115kV

P0411 Project System Impact Study

Selected WECC Bus Voltage Plots

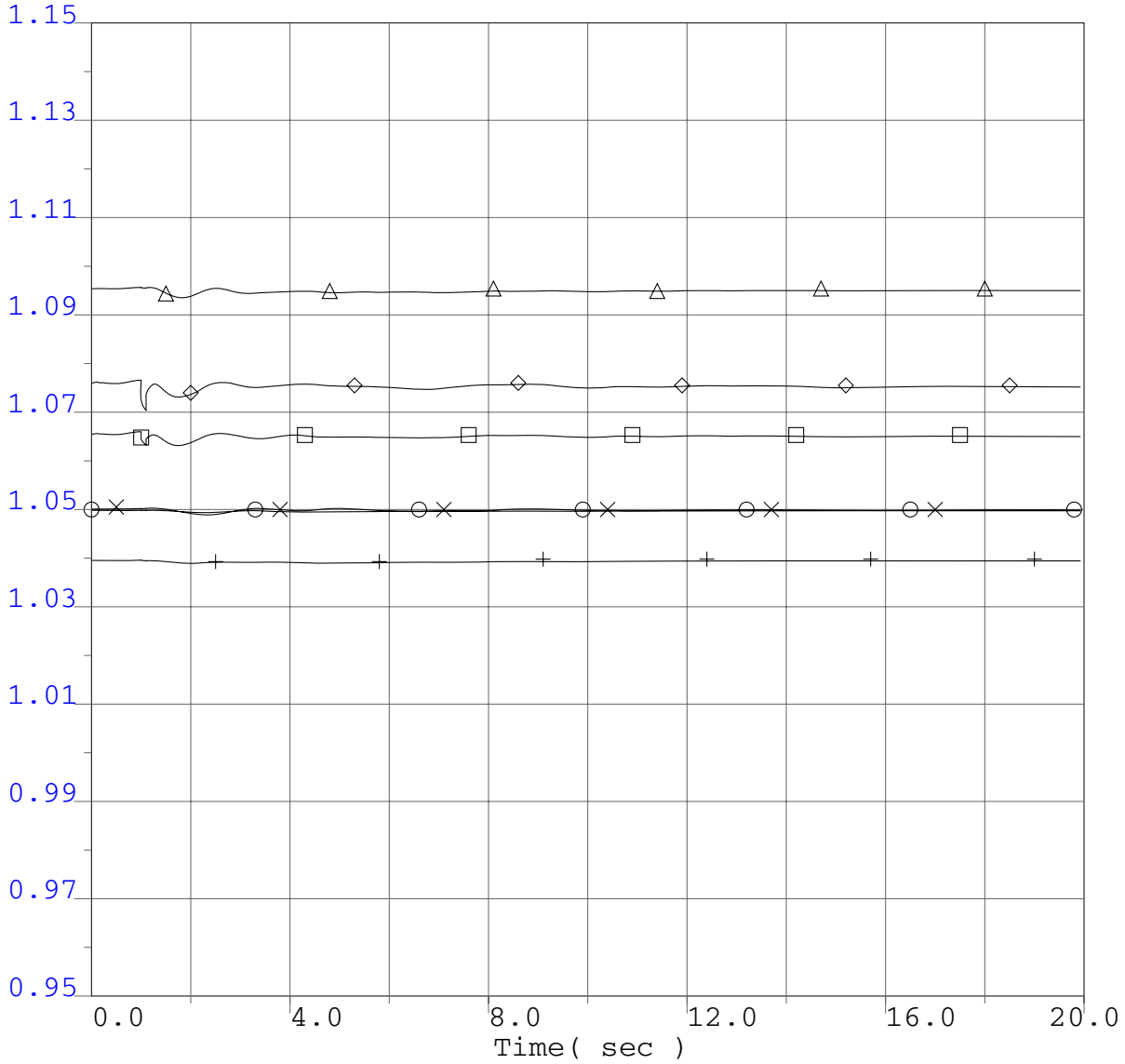

○	0.95	vbus	14001	FOURCORN	500.0	"*" 1	1.15
×	0.95	vbus	50703	NIC500	500.0	"*" 1	1.15
□	0.95	vbus	60240	MIDPOINT	500.0	"*" 1	1.15
△	0.95	vbus	62012	TOWN2	500.0	"*" 1	1.15
◇	0.95	vbus	40687	MALIN	500.0	"*" 1	1.15
+	0.95	vbus	66340	SIGURD	345.0	"*" 1	1.15

P0411 Project System Impact Study
2008 Summer Peak Base Case
P0411 @ 166.4MW
Humboldt Bay PP - Bumboldt #1 115kV line outage
3 phase 6 cycle fault at Humboldt Bay PP 115kV bus and clear HBay-Humb #1 115kV

P0411 Project System Impact Study

Selected WECC Bus Voltage Plots

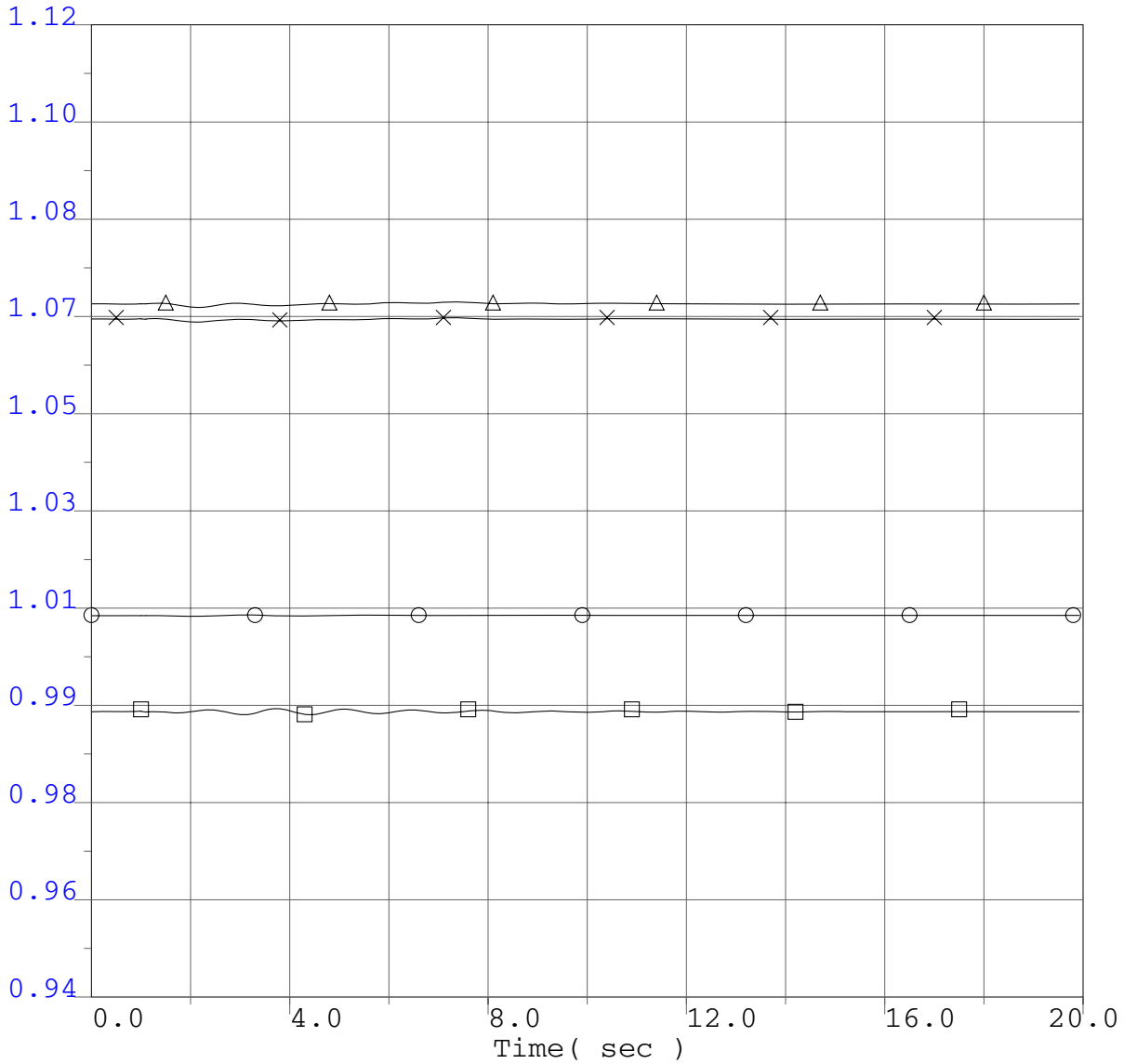

○ 0.94	vbus	54150	LANGDON2	500.0	"*"	1	1.12
× 0.94	vbus	14003	NAVAJO	500.0	"*"	1	1.12
□ 0.94	vbus	24153	VESTAL	230.0	"*"	1	1.12
△ 0.94	vbus	22360	IMPRLVLY	500.0	"*"	1	1.12

P0411 Project System Impact Study
2008 Summer Peak Base Case
P0411 @ 166.4MW
Humboldt Bay PP - Bumboldt #1 115kV line outage
3 phase 6 cycle fault at Humboldt Bay PP 115kV bus and clear HBay-Humb #1 115kV

P0411 Project System Impact Study

Selected WECC Bus Frequency Plots

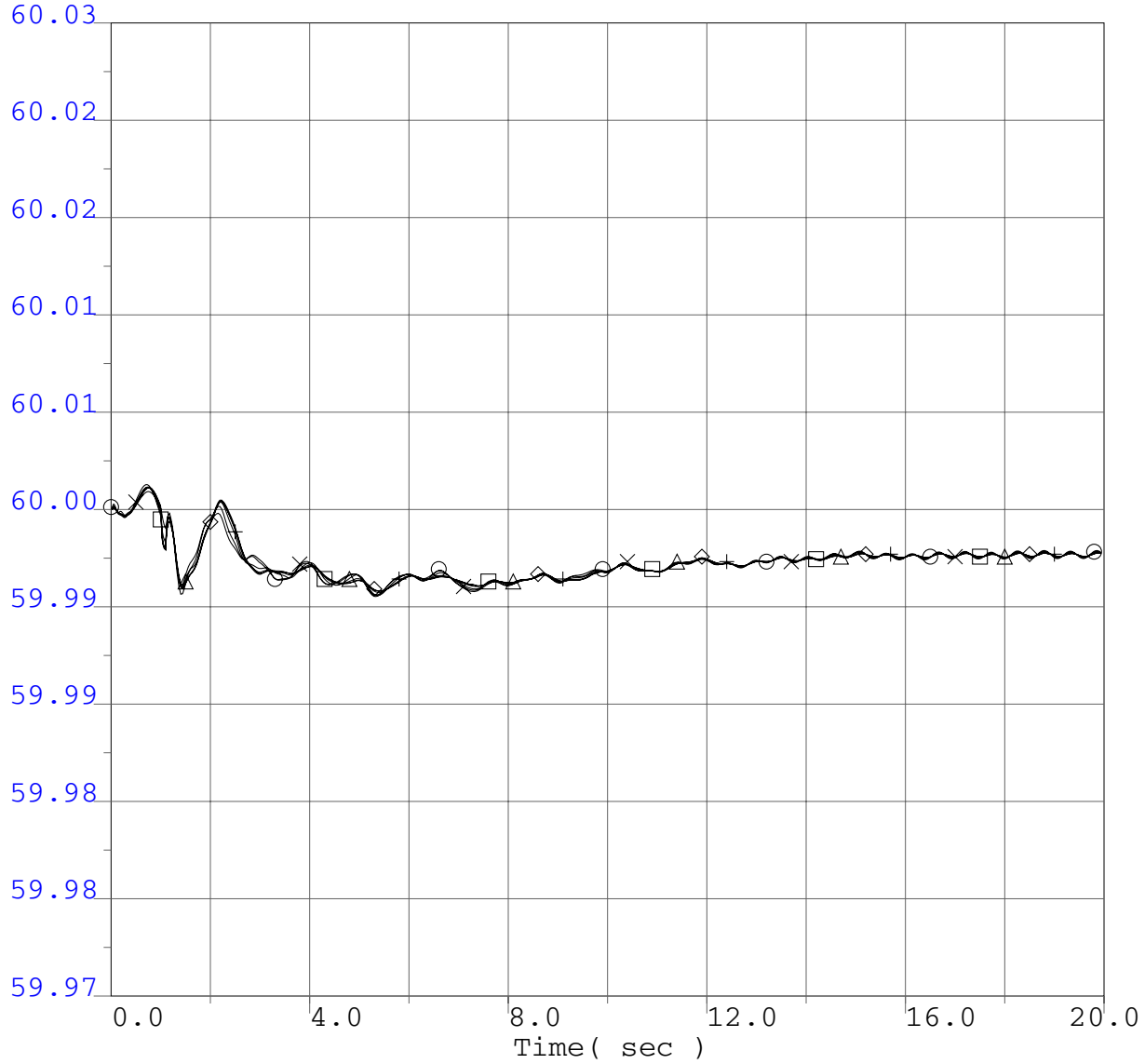

○	59.97	fbus	40687	MALIN	500.0	"*" 1	60.03
×	59.97	fbus	30005	ROUND MT	500.0	"*" 1	60.03
□	59.97	fbus	30015	TABLE MT	500.0	"*" 1	60.03
△	59.97	fbus	30030	VACA-DIX	500.0	"*" 1	60.03
◇	59.97	fbus	30040	TESLA	500.0	"*" 1	60.03
+	59.97	fbus	30035	TRACY	500.0	"*" 1	60.03

P0411 Project System Impact Study
2008 Summer Peak Base Case
P0411 @ 166.4MW
Humboldt Bay PP - Bumboldt #1 115kV line outage
3 phase 6 cycle fault at Humboldt Bay PP 115kV bus and clear HBay-Humb #1 115kV

P0411 Project System Impact Study

Selected WECC Bus Frequency Plots

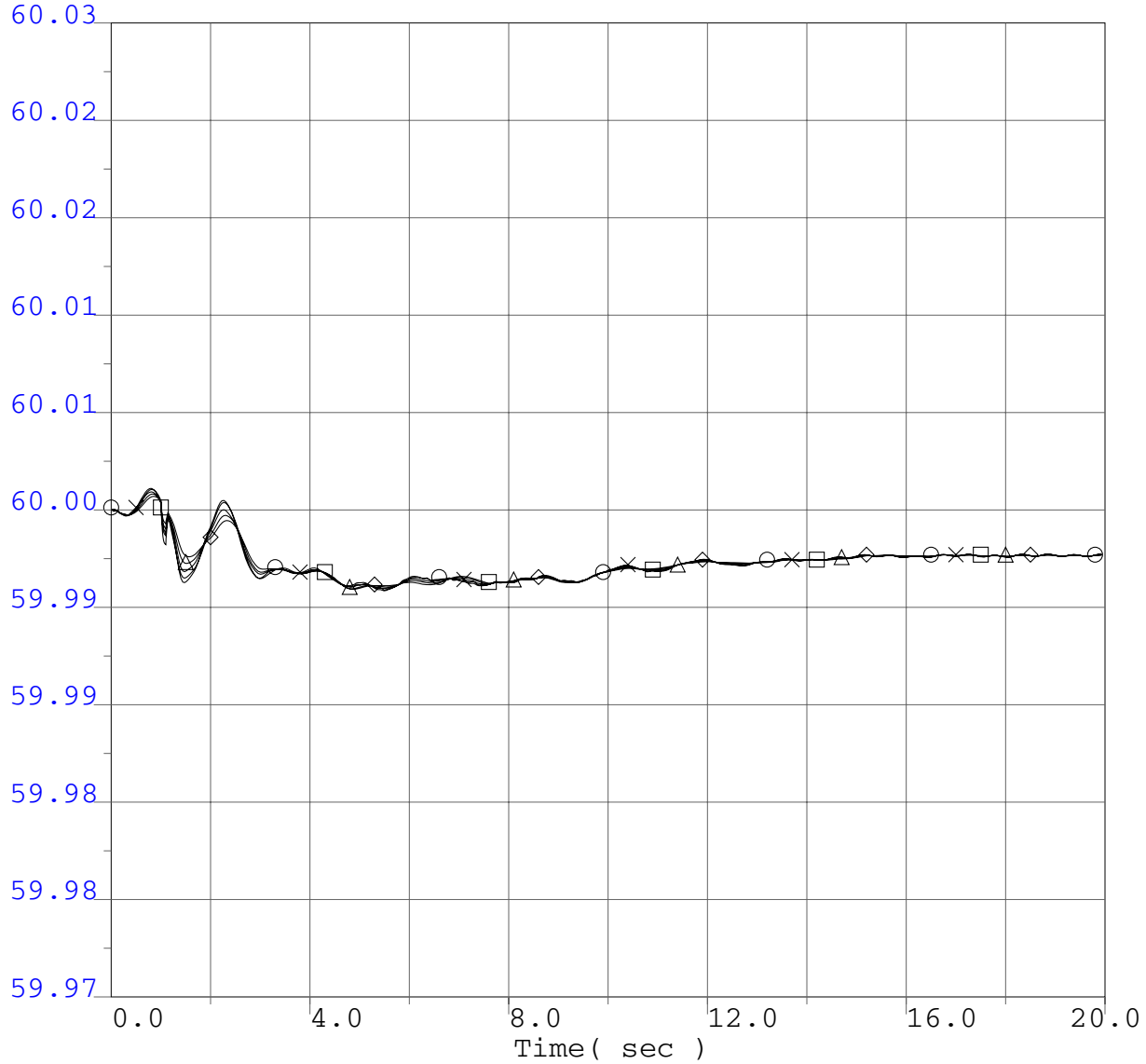

○ 59.97	fbus	30042	METCALF	500.0	"*"	1	60.03
× 59.97	fbus	30045	MOSSLAND	500.0	"*"	1	60.03
□ 59.97	fbus	30050	LOSBANOS	500.0	"*"	1	60.03
△ 59.97	fbus	30055	GATES	500.0	"*"	1	60.03
◇ 59.97	fbus	30060	MIDWAY	500.0	"*"	1	60.03

P0411 Project System Impact Study
2008 Summer Peak Base Case
P0411 @ 166.4MW
Humboldt Bay PP - Bumboldt #1 115kV line outage
3 phase 6 cycle fault at Humboldt Bay PP 115kV bus and clear HBay-Humb #1 115kV

P0411 Project System Impact Study

Selected WECC Bus Frequency Plots

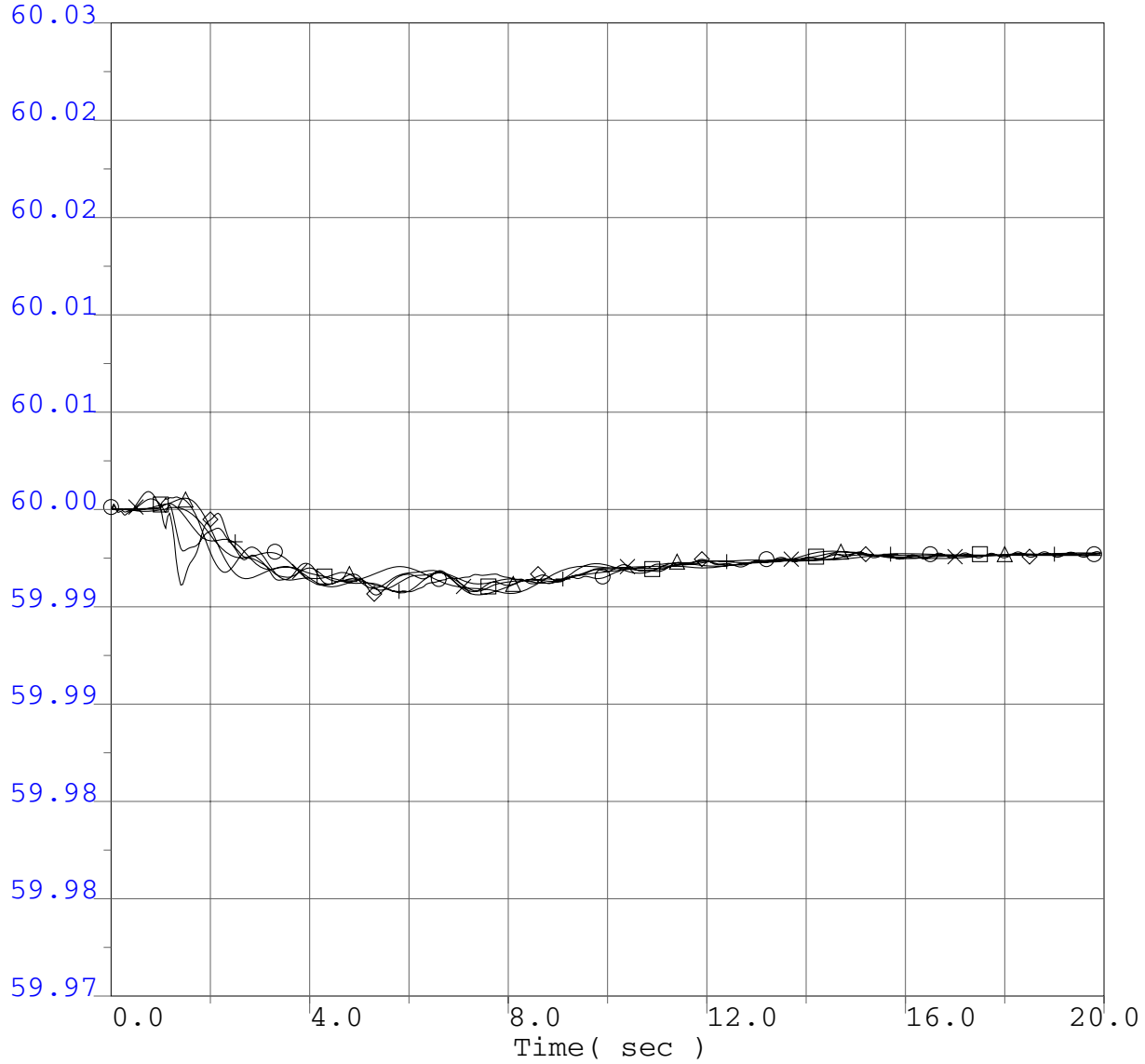

○ 59.97	fbus	14001	FOURCORN	500.0	"*"	1	60.03
× 59.97	fbus	50703	NIC500	500.0	"*"	1	60.03
□ 59.97	fbus	60240	MIDPOINT	500.0	"*"	1	60.03
△ 59.97	fbus	62012	TOWN2	500.0	"*"	1	60.03
◇ 59.97	fbus	40687	MALIN	500.0	"*"	1	60.03
+ 59.97	fbus	66340	SIGURD	345.0	"*"	1	60.03

P0411 Project System Impact Study
2008 Summer Peak Base Case
P0411 @ 166.4MW
Humboldt Bay PP - Bumboldt #1 115kV line outage
3 phase 6 cycle fault at Humboldt Bay PP 115kV bus and clear HBay-Humb #1 115kV

P0411 Project System Impact Study

Selected WECC Bus Frequency Plots

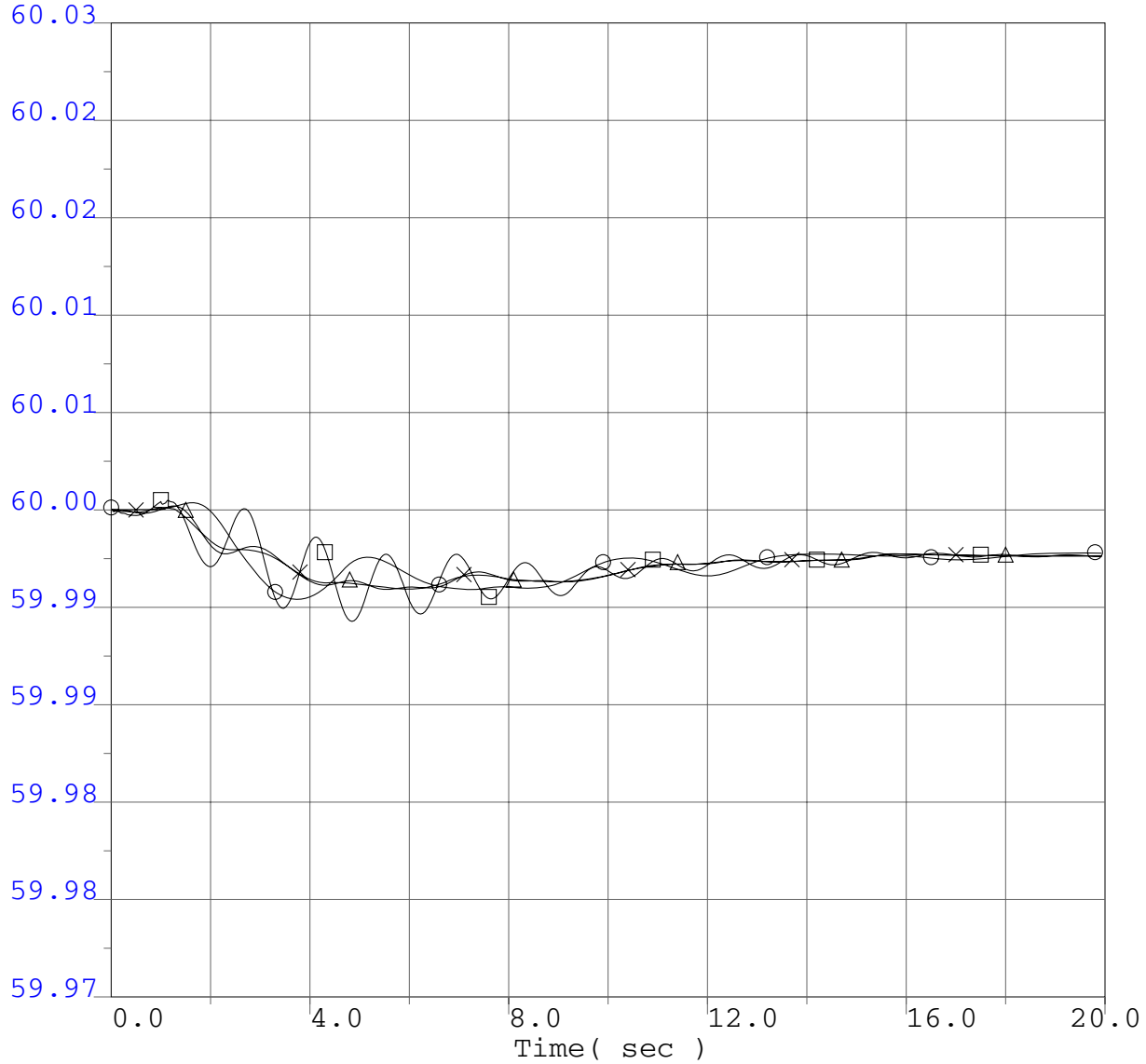

○ 59.97	fbus	54150	LANGDON2	500.0	"*"	1	60.03
× 59.97	fbus	14003	NAVAJO	500.0	"*"	1	60.03
□ 59.97	fbus	24153	VESTAL	230.0	"*"	1	60.03
△ 59.97	fbus	22360	IMPRLVLY	500.0	"*"	1	60.03

P0411 Project System Impact Study
2008 Summer Peak Base Case
P0411 @ 166.4MW
Humboldt Bay PP - Bumboldt #1 115kV line outage
3 phase 6 cycle fault at Humboldt Bay PP 115kV bus and clear HBay-Humb #1 115kV

P0411 Project System Impact Study

WECC Generator Rotor Angle

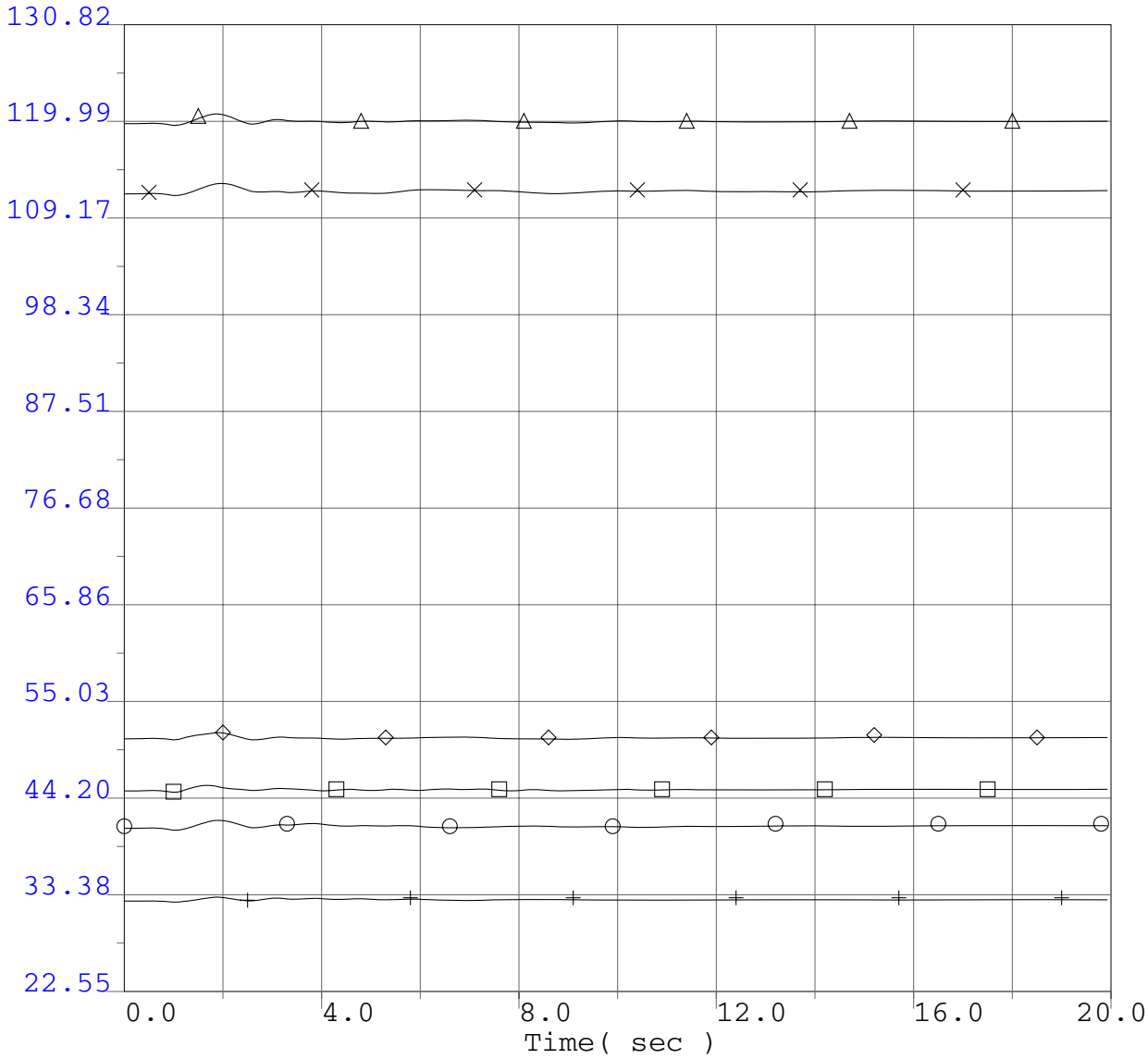

○	22.55	ang	14914	FCNGN4CC	22.0	"H" 1	130.82
×	22.55	ang	50500	GMS G6	13.8	"1" 1	130.82
□	22.55	ang	60100	BRWNL 5	13.8	"1" 1	130.82
△	22.55	ang	62048	COLSTP 3	26.0	"1" 1	130.82
◇	22.55	ang	41701	JONDAY01	13.8	"1" 1	130.82
+	22.55	ang	36411	DIABLO 1	25.0	"1" 1	130.82

P0411 Project System Impact Study
2008 Summer Peak Base Case
P0411 @ 166.4MW
Humboldt Bay PP - Bumboldt #1 115kV line outage
3 phase 6 cycle fault at Humboldt Bay PP 115kV bus and clear HBay-Humb #1 115kV

P0411 Project System Impact Study

WECC Generator Rotor Angle

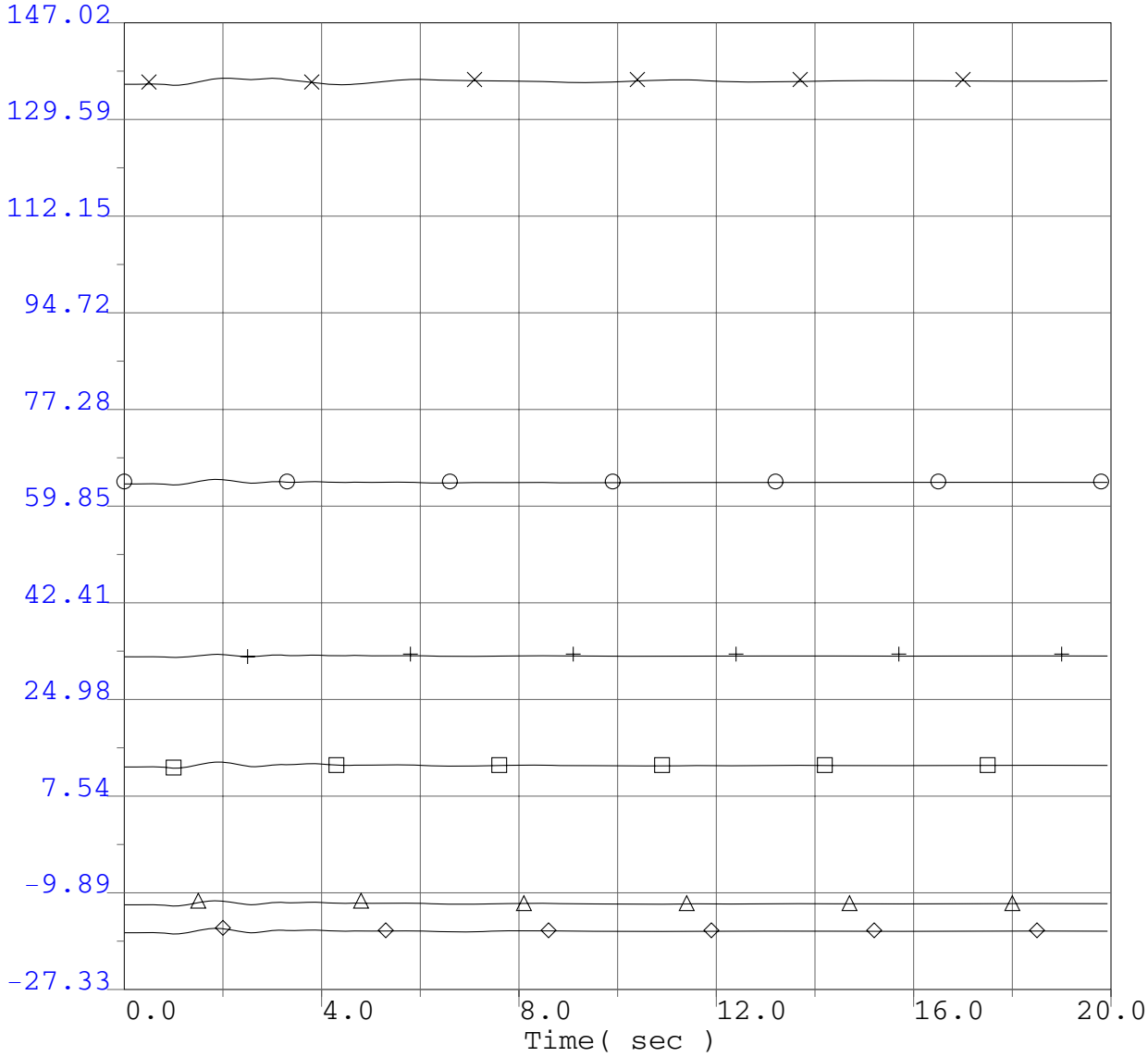

○	-27.33	ang	65490	EHUNTR 1	24.0	"1" 1	147.02
×	-27.33	ang	54280	SUND#2GN	18.0	"2" 1	147.02
□	-27.33	ang	79151	GLENC3-4	13.8	"3" 1	147.02
△	-27.33	ang	24130	S.ONOFR3	22.0	"3" 1	147.02
◇	-27.33	ang	22244	ENCINA 5	24.0	"1" 1	147.02
+	-27.33	ang	36411	DIABLO 1	25.0	"1" 1	147.02

P0411 Project System Impact Study
2008 Summer Peak Base Case
P0411 @ 166.4MW
Humboldt Bay PP - Bumboldt #1 115kV line outage
3 phase 6 cycle fault at Humboldt Bay PP 115kV bus and clear HBay-Humb #1 115kV

P0411 Project System Impact Study

Selected PG&E Transmission Line Flows (MW)

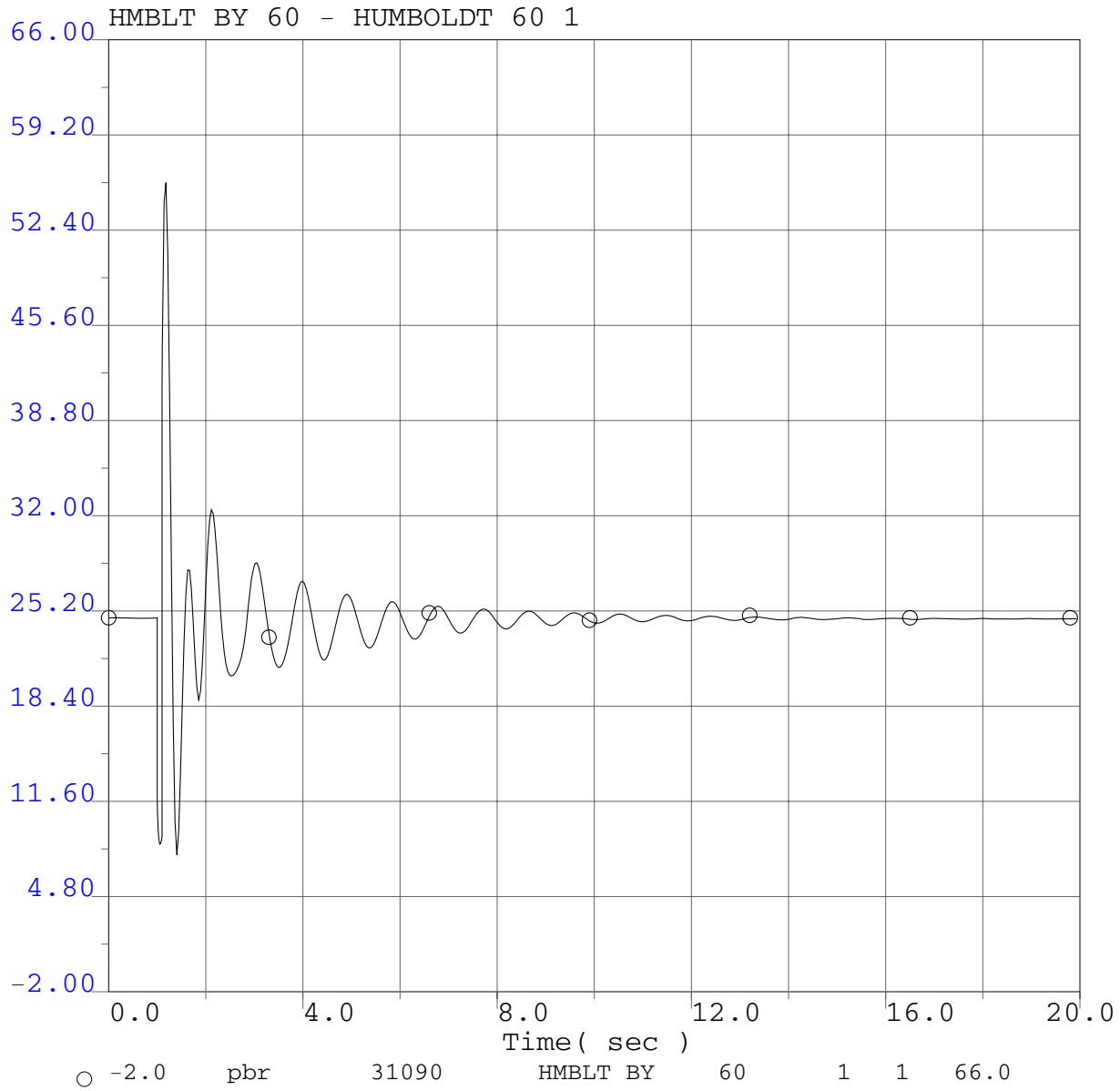

P0411 Project System Impact Study
2008 Summer Peak Base Case
P0411 @ 166.4MW
Humboldt Bay PP - Bumboldt #1 115kV line outage
3 phase 6 cycle fault at Humboldt Bay PP 115kV bus and clear HBay-Humb #1 115kV

P0411 Project System Impact Study

Selected PG&E Transmission Line Flows (MW)

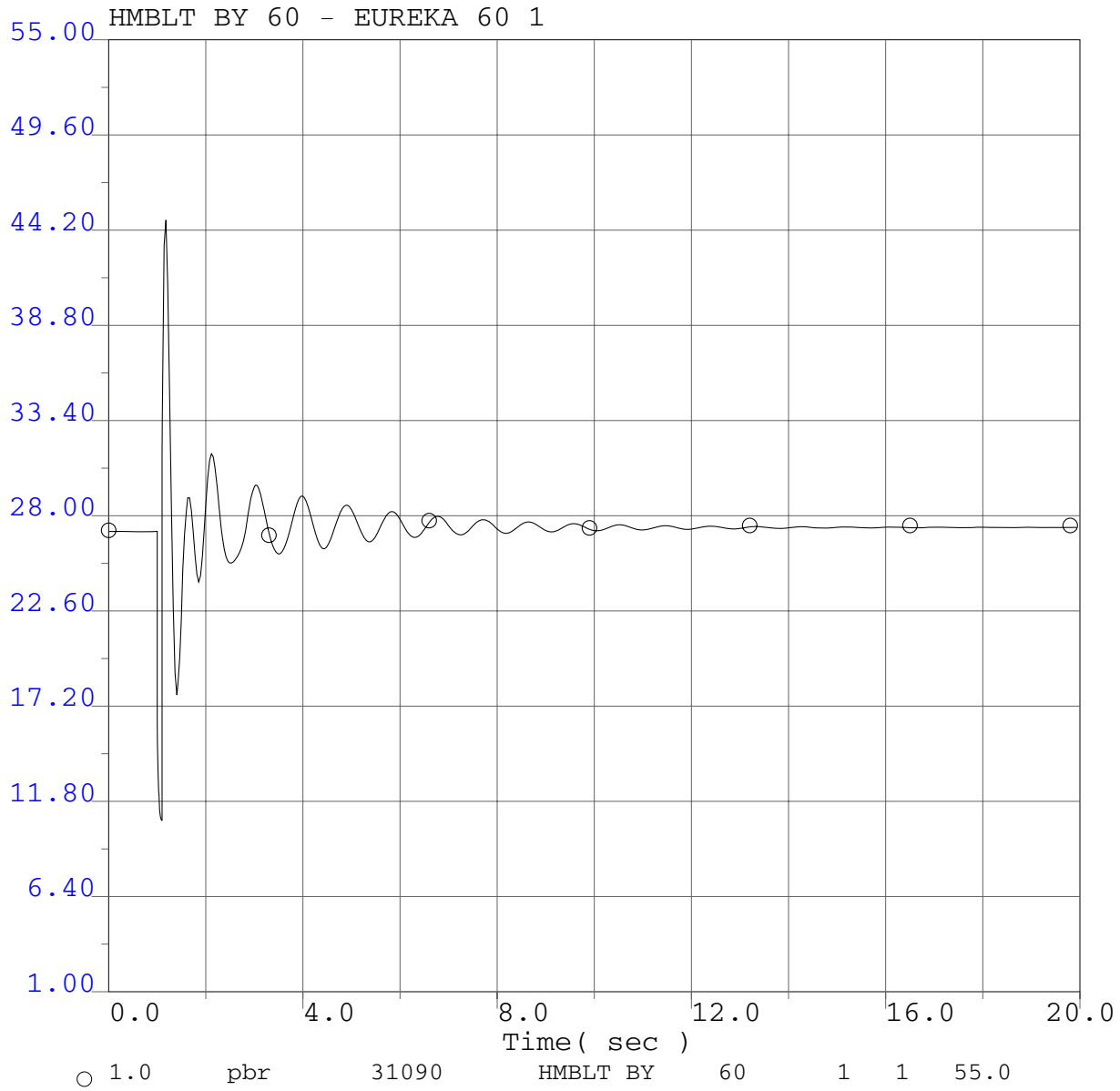

P0411 Project System Impact Study
2008 Summer Peak Base Case
P0411 @ 166.4MW
Humboldt Bay PP - Bumboldt #1 115kV line outage
3 phase 6 cycle fault at Humboldt Bay PP 115kV bus and clear HBay-Humb #1 115kV

P0411 Project System Impact Study

Selected PG&E Transmission Line Flows (MW)

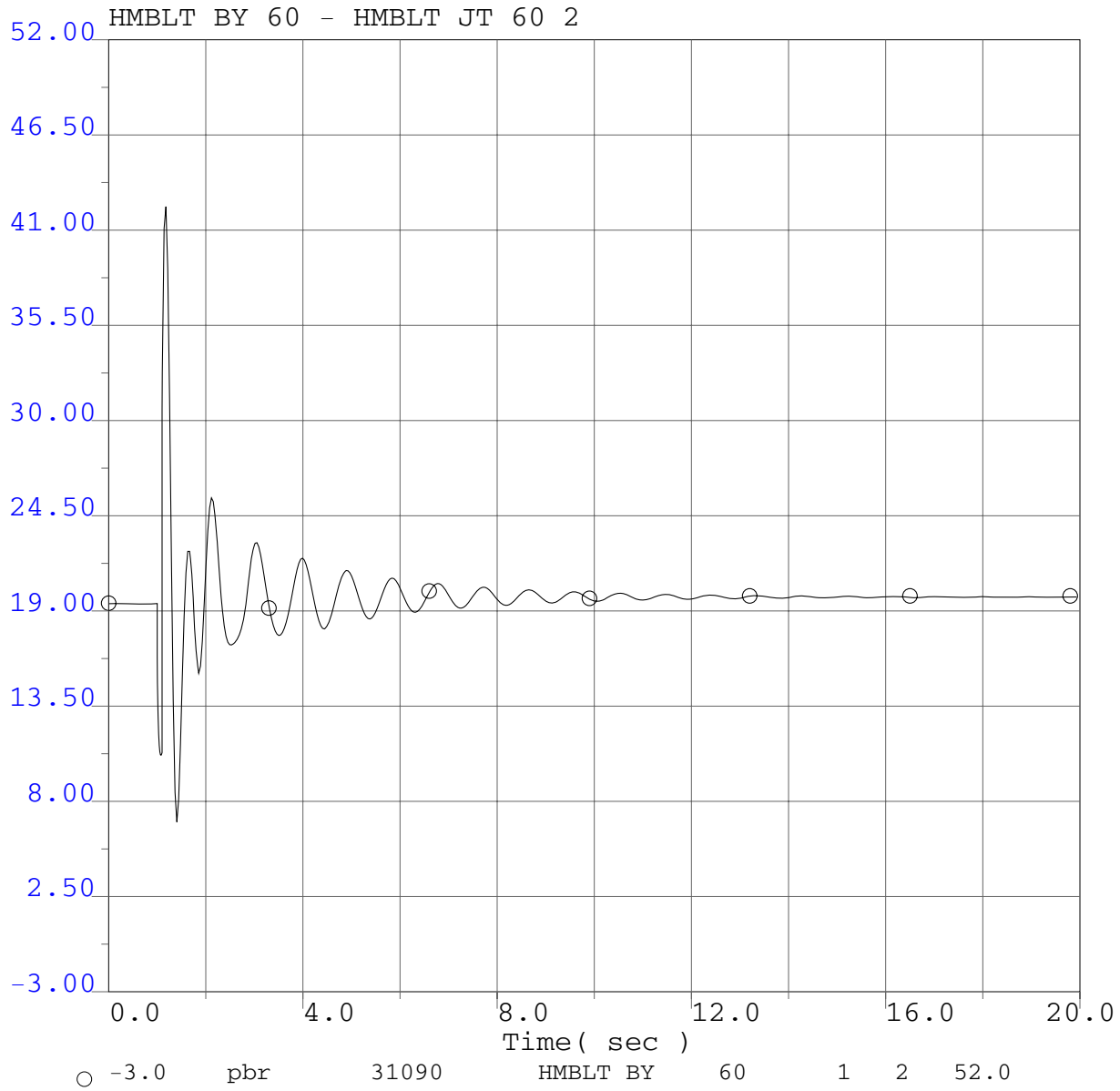

P0411 Project System Impact Study
2008 Summer Peak Base Case
P0411 @ 166.4MW
Humboldt Bay PP - Bumboldt #1 115kV line outage
3 phase 6 cycle fault at Humboldt Bay PP 115kV bus and clear HBay-Humb #1 115kV

P0411 Project System Impact Study

Selected PG&E Transmission Line Flows (MW)

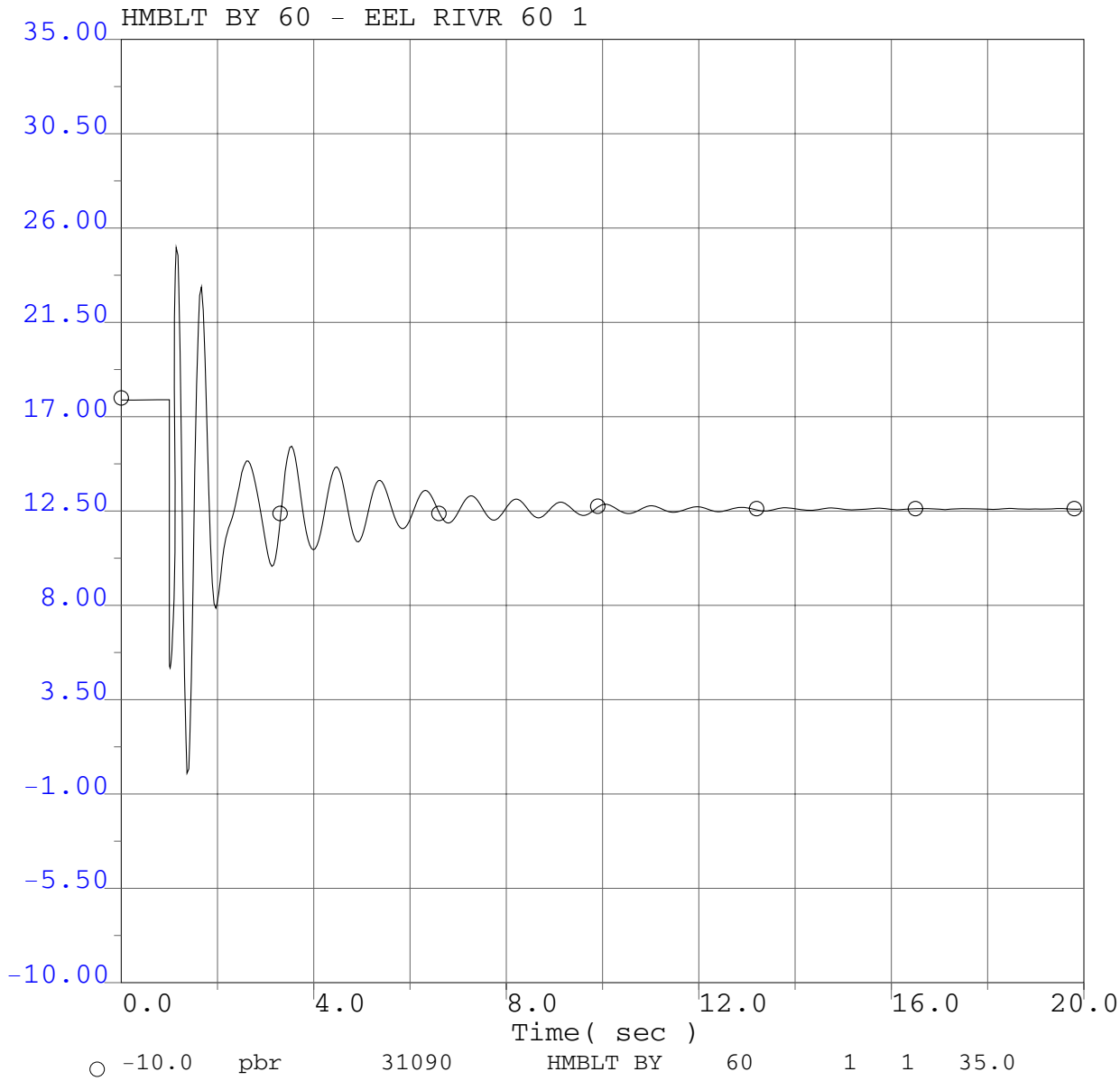

P0411 Project System Impact Study
2008 Summer Peak Base Case
P0411 @ 166.4MW
Humboldt Bay PP - Bumboldt #1 115kV line outage
3 phase 6 cycle fault at Humboldt Bay PP 115kV bus and clear HBay-Humb #1 115kV

P0411 Project System Impact Study

Selected PG&E Transmission Line Flows (MW)

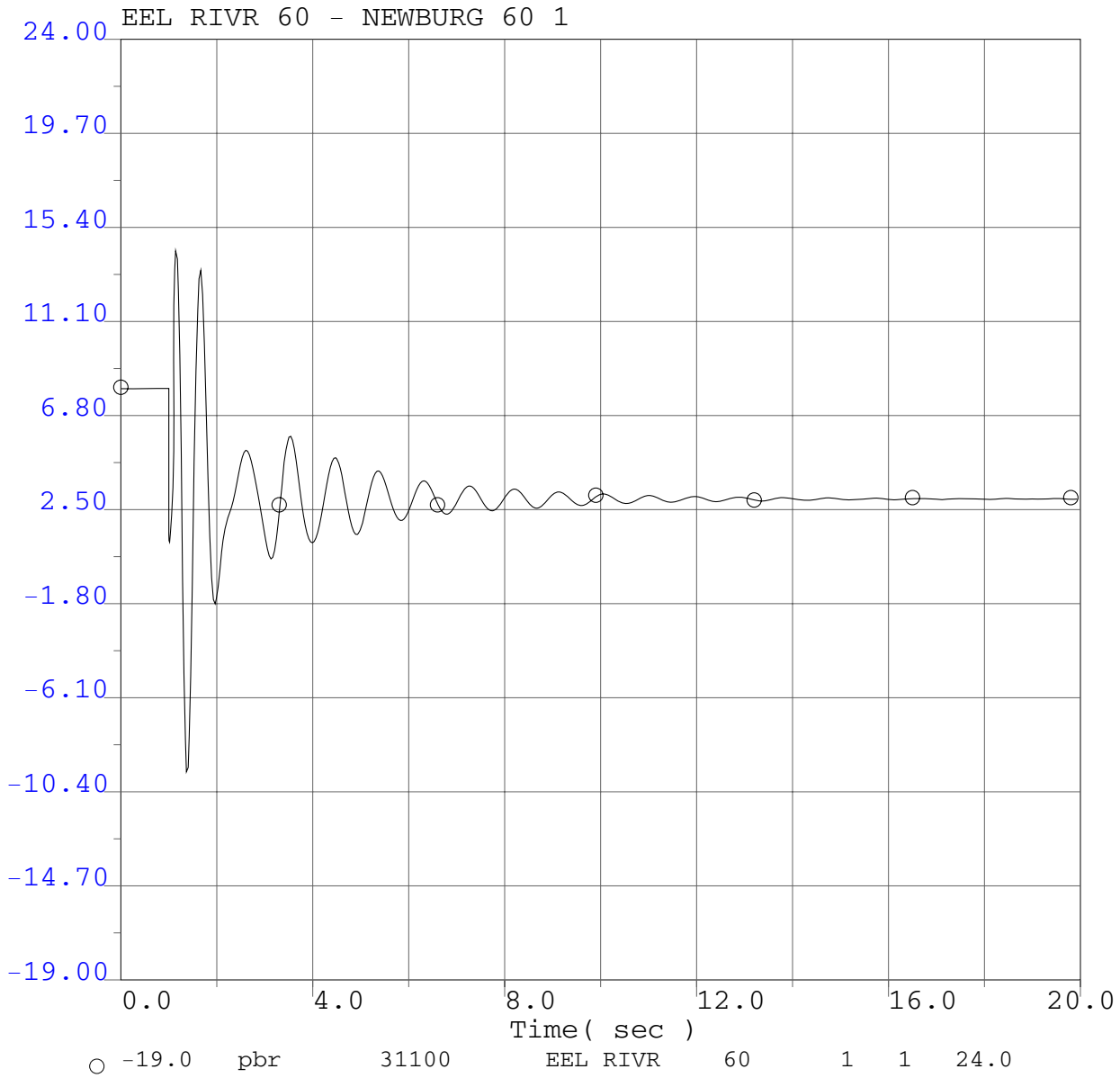

P0411 Project System Impact Study
2008 Summer Peak Base Case
P0411 @ 166.4MW
Humboldt Bay PP - Bumboldt #1 115kV line outage
3 phase 6 cycle fault at Humboldt Bay PP 115kV bus and clear HBay-Humb #1 115kV

P0411 Project System Impact Study

Selected PG&E Transmission Line Flows (MW)

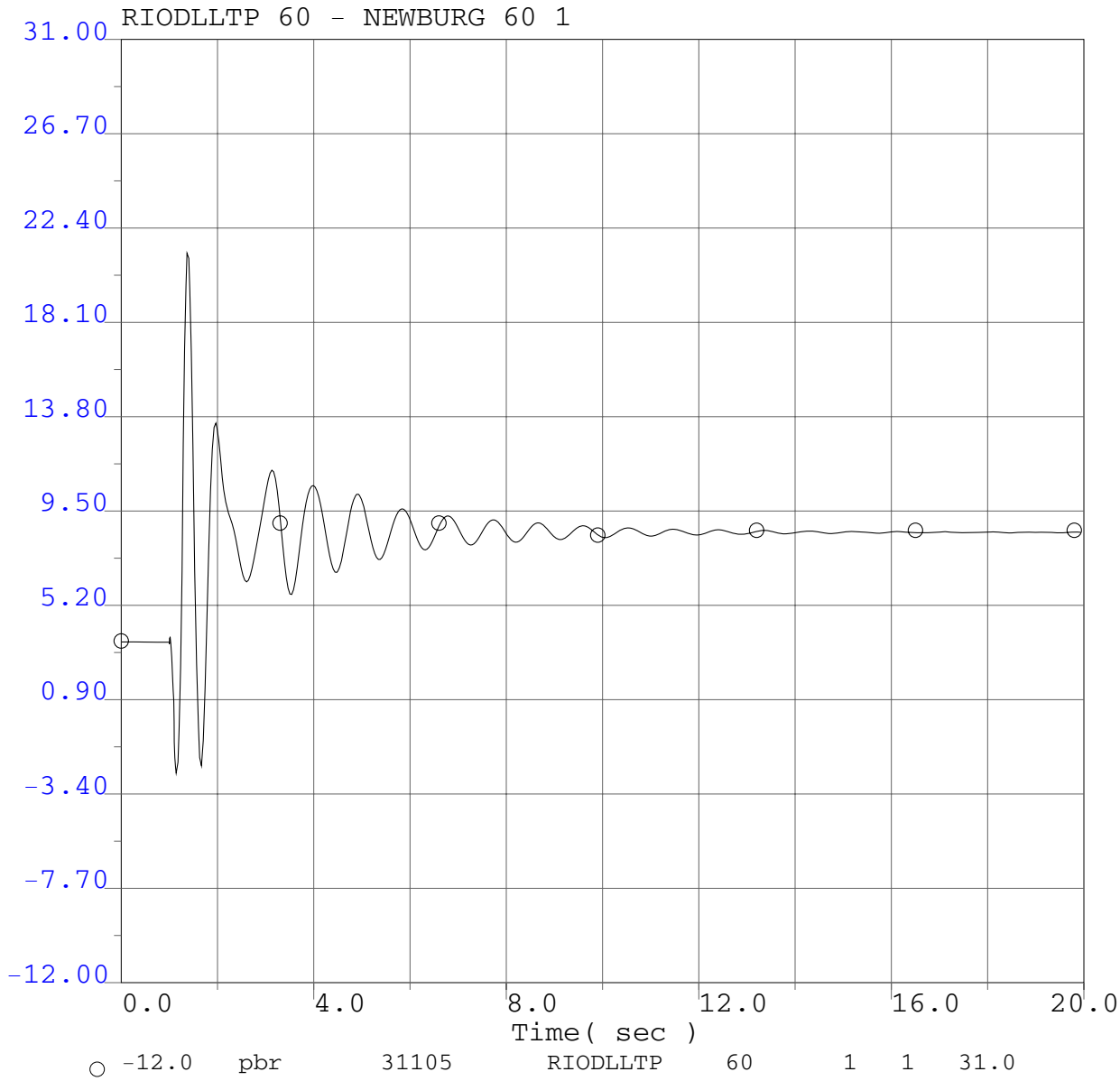

P0411 Project System Impact Study
2008 Summer Peak Base Case
P0411 @ 166.4MW
Humboldt Bay PP - Bumboldt #1 115kV line outage
3 phase 6 cycle fault at Humboldt Bay PP 115kV bus and clear HBay-Humb #1 115kV

P0411 Project System Impact Study

Selected PG&E Transmission Line Flows (MW)

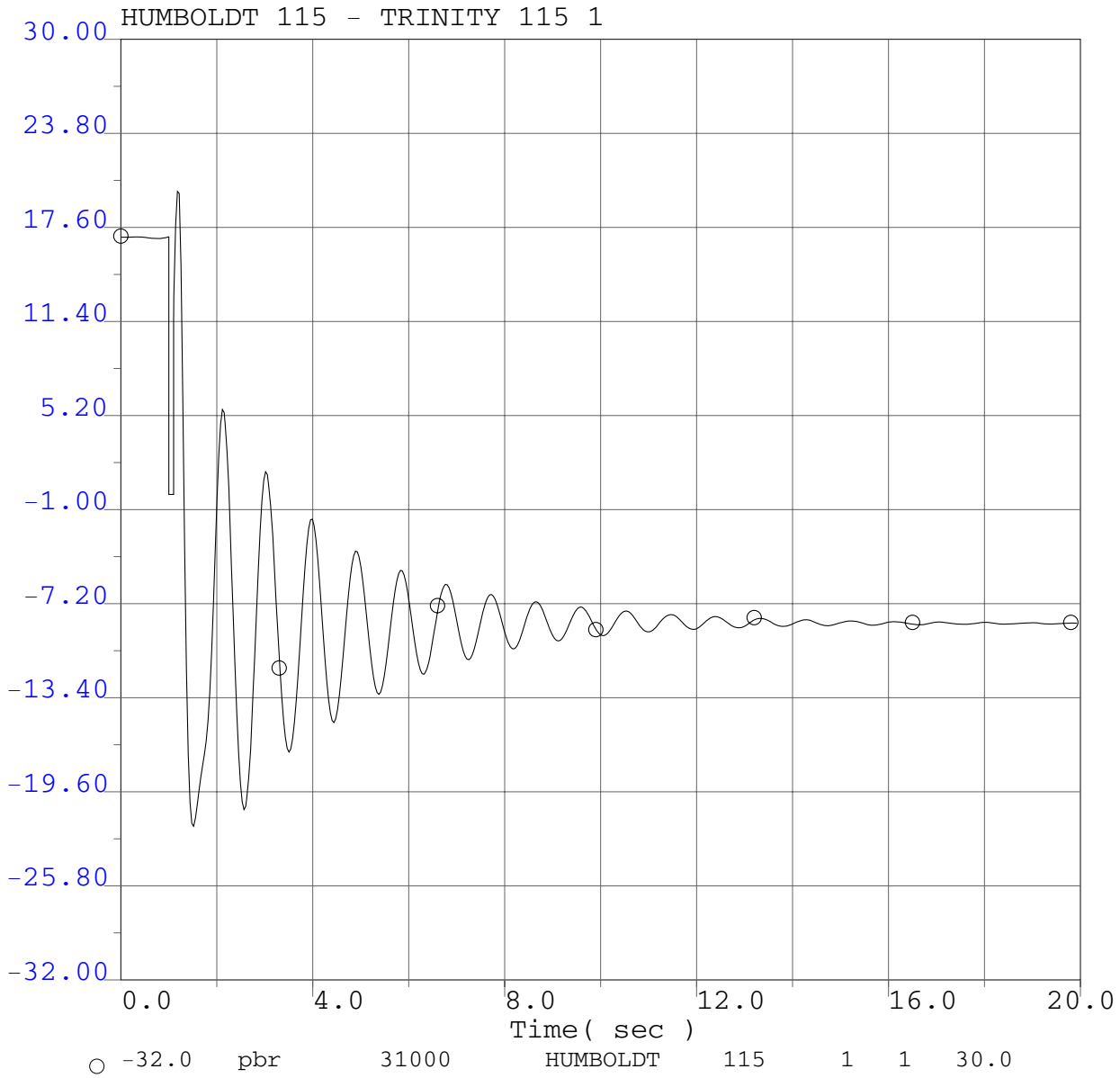

P0411 Project System Impact Study
2008 Summer Peak Base Case
P0411 @ 166.4MW
Humboldt Bay PP - Bumboldt #1 115kV line outage
3 phase 6 cycle fault at Humboldt Bay PP 115kV bus and clear HBay-Humb #1 115kV

P0411 Project System Impact Study

Selected PG&E Transmission Line Flows (MW)

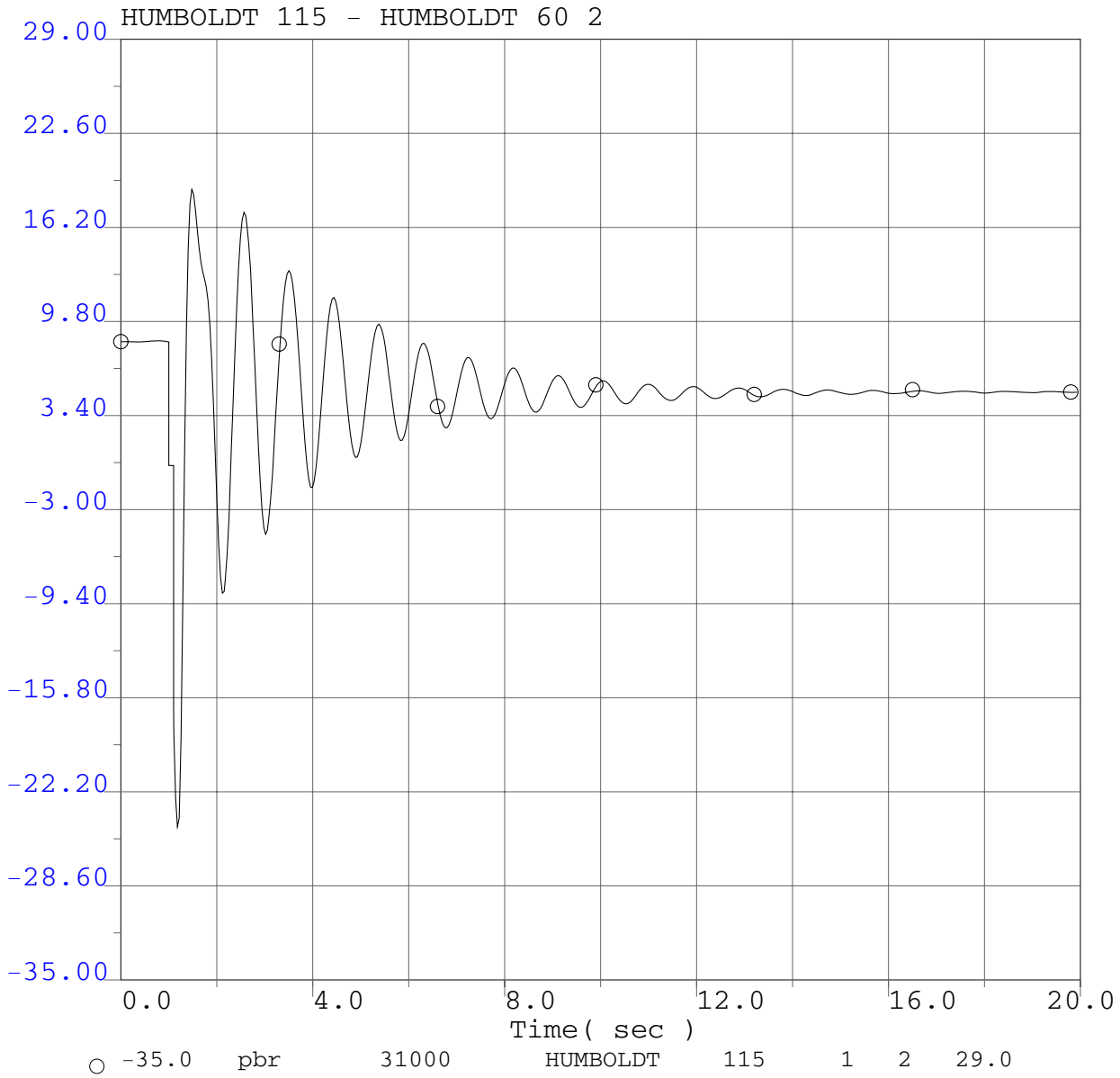

P0411 Project System Impact Study
2008 Summer Peak Base Case
P0411 @ 166.4MW
Humboldt Bay PP - Bumboldt #1 115kV line outage
3 phase 6 cycle fault at Humboldt Bay PP 115kV bus and clear HBay-Humb #1 115kV

P0411 Project System Impact Study

Selected PG&E Transmission Line Flows (MW)

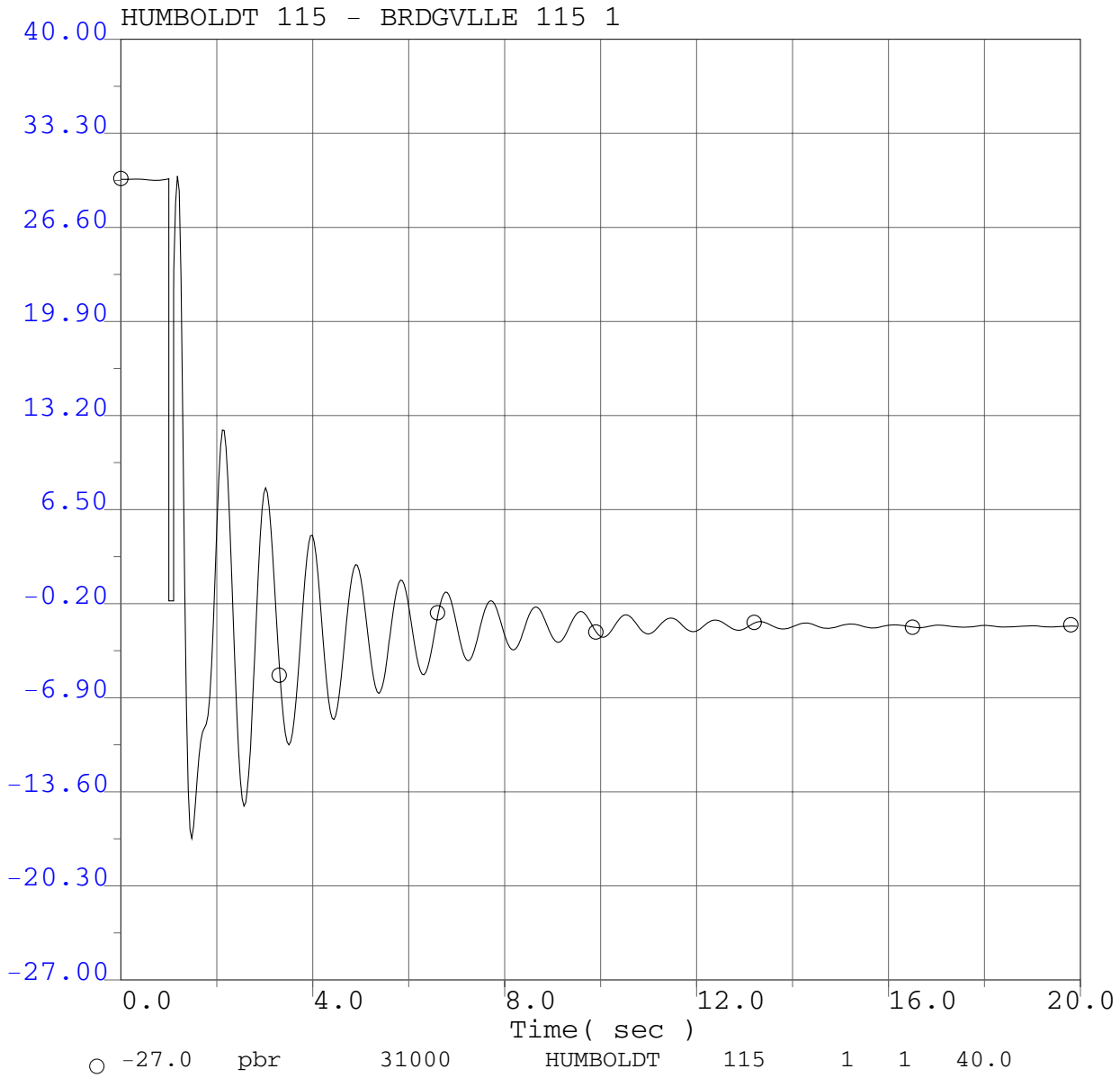

P0411 Project System Impact Study
2008 Summer Peak Base Case
P0411 @ 166.4MW
Humboldt Bay PP - Bumboldt #1 115kV line outage
3 phase 6 cycle fault at Humboldt Bay PP 115kV bus and clear HBay-Humb #1 115kV

P0411 Project System Impact Study

Selected PG&E Transmission Line Flows (MW)

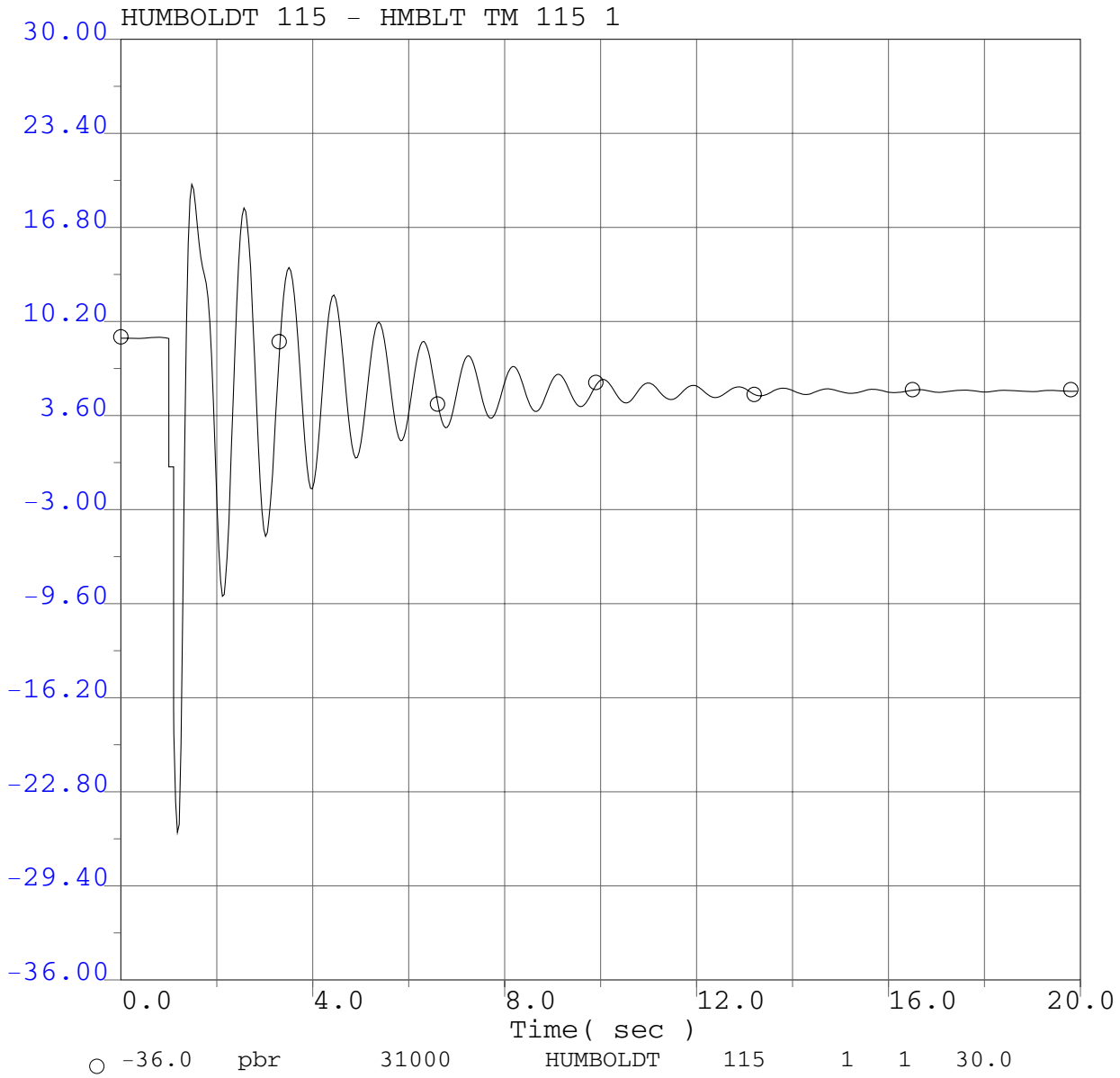

P0411 Project System Impact Study
2008 Summer Peak Base Case
P0411 @ 166.4MW
Humboldt Bay PP - Bumboldt #1 115kV line outage
3 phase 6 cycle fault at Humboldt Bay PP 115kV bus and clear HBay-Humb #1 115kV

P0411 Project System Impact Study

Selected PG&E Bus Voltage Plots Adjacent to Fault

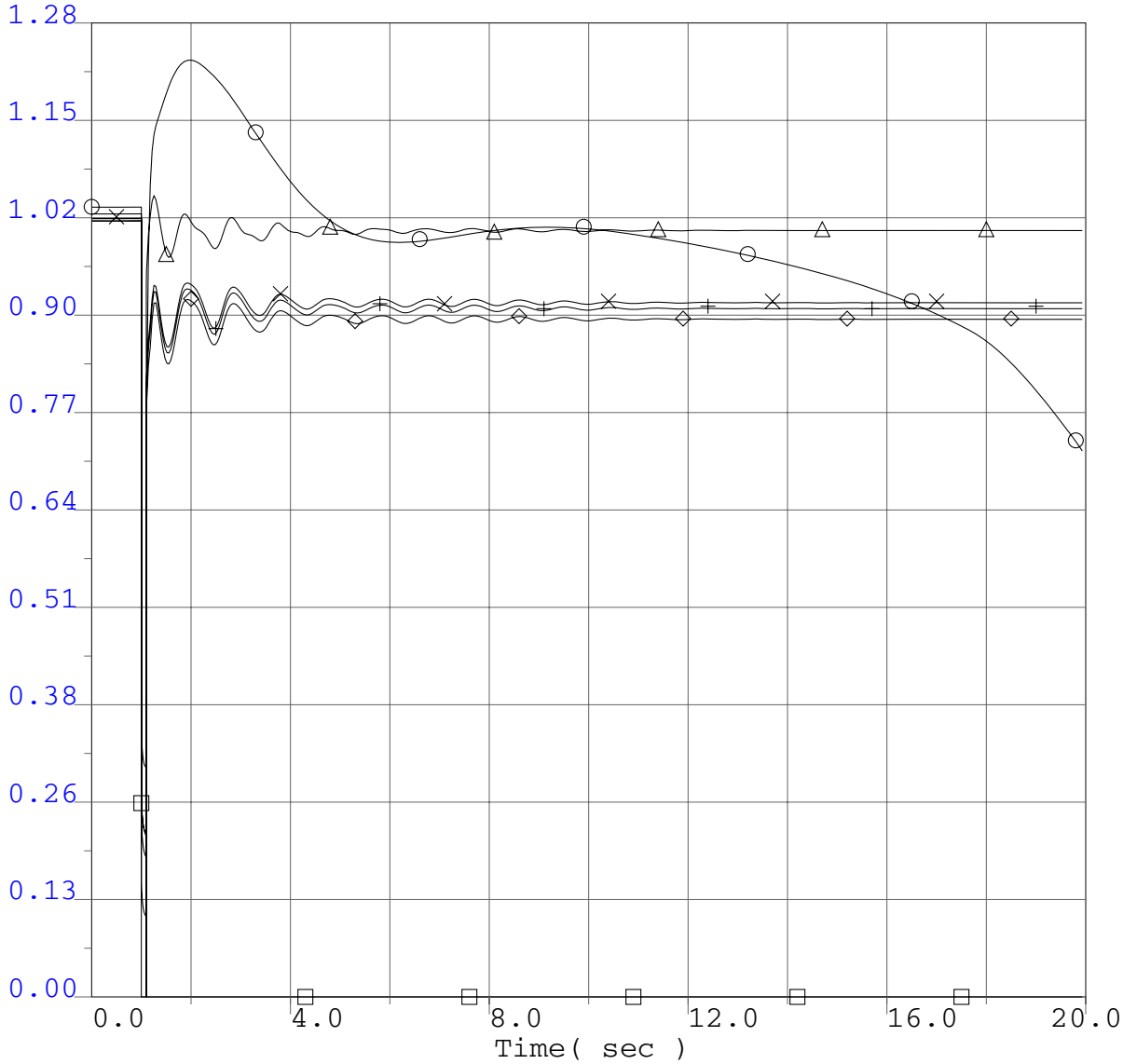

○	0.0	vbul	31090	HMBLT BY	60.0	"*"	1	1.28
×	0.0	vbus	31080	HUMBOLDT	60.0	"*"	1	1.28
□	0.0	vbul	31102	NEWBURG	60.0	"*"	1	1.28
△	0.0	vbus	31105	RIODLLTP	60.0	"*"	1	1.28
◇	0.0	vbul	31086	EUREKA	60.0	"*"	1	1.28
+	0.0	vbul	31082	HARRIS	60.0	"*"	1	1.28

P0411 Project System Impact Study
2008 Summer Peak Base Case
P0411 @ 166.4MW
Humboldt Bay PP Bus outage
3 ph 6 cyc flt @ Humboldt Bay PP 60kV bus & clr HBay 60kV bus

P0411 Project System Impact Study

Selected PG&E Bus Frequency Plots Adjacent to Fault

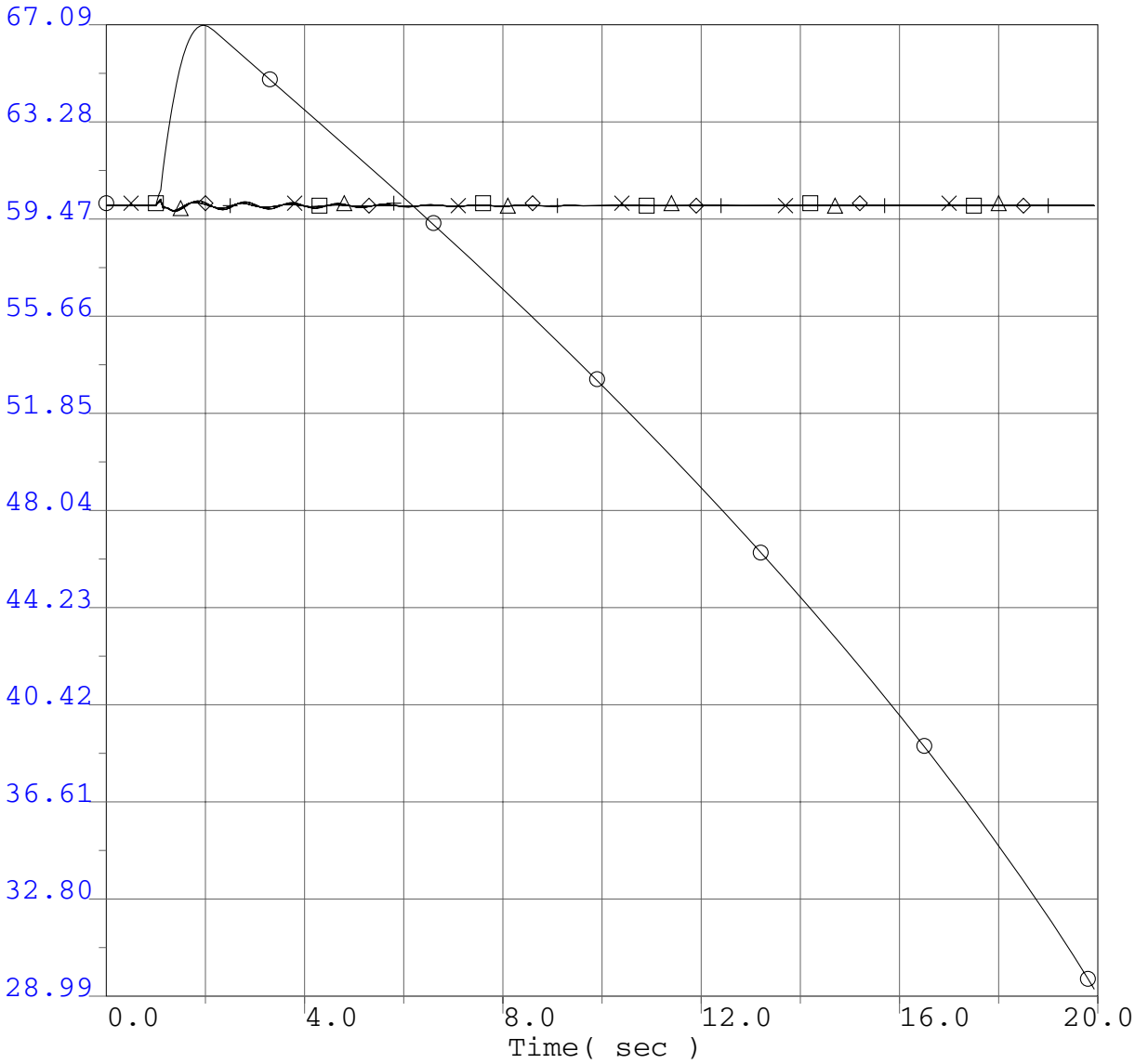

○	28.99	fbul	31090	HMBLT BY	60.0	"*" 1	67.09
×	28.99	fbus	31080	HUMBOLDT	60.0	"*" 1	67.09
□	28.99	fbul	31102	NEWBURG	60.0	"*" 1	67.09
△	28.99	fbus	31105	RIODLLTP	60.0	"*" 1	67.09
◇	28.99	fbul	31086	EUREKA	60.0	"*" 1	67.09
+	28.99	fbul	31082	HARRIS	60.0	"*" 1	67.09

P0411 Project System Impact Study
2008 Summer Peak Base Case
P0411 @ 166.4MW
Humboldt Bay PP Bus outage
3 ph 6 cyc flt @ Humboldt Bay PP 60kV bus & clr HBay 60kV bus

P0411 Project System Impact Study

Project Generator Terminal Voltages

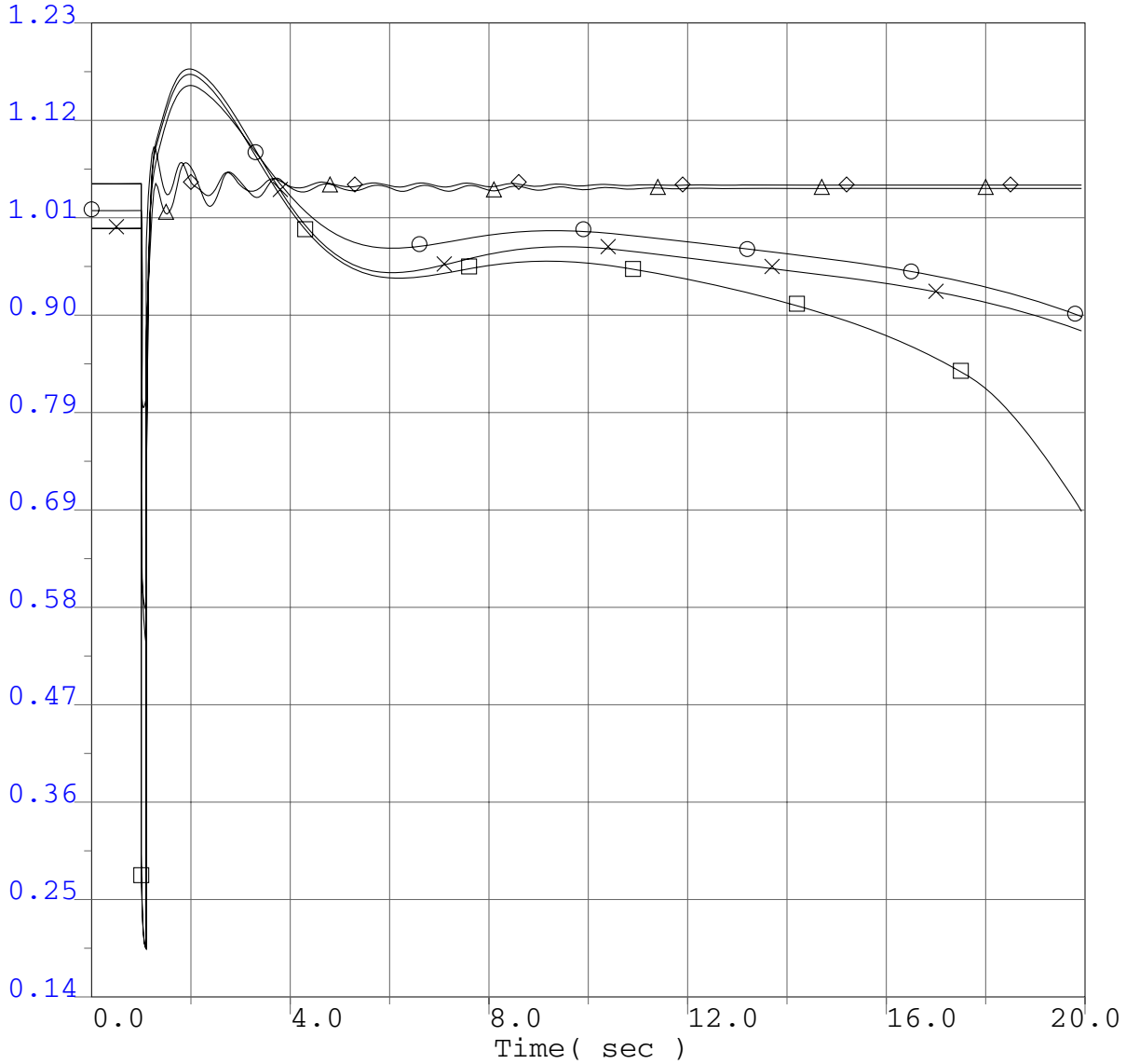

○	0.14	vt	31180	P0411G1	13.8	"1" 1	1.23
×	0.14	vt	31181	P0411G2	13.8	"5" 1	1.23
□	0.14	vt	31182	P0411G3	13.8	"8" 1	1.23
△	0.14	vt	31150	FAIRHAVN	13.8	"1" 1	1.23
◇	0.14	vt	31158	LP SAMOA	12.5	"1" 1	1.23

P0411 Project System Impact Study
2008 Summer Peak Base Case
P0411 @ 166.4MW
Humboldt Bay PP Bus outage
3 ph 6 cyc flt @ Humboldt Bay PP 60kV bus & clr HBay 60kV bus

P0411 Project System Impact Study

Project Generator Rotor Speed

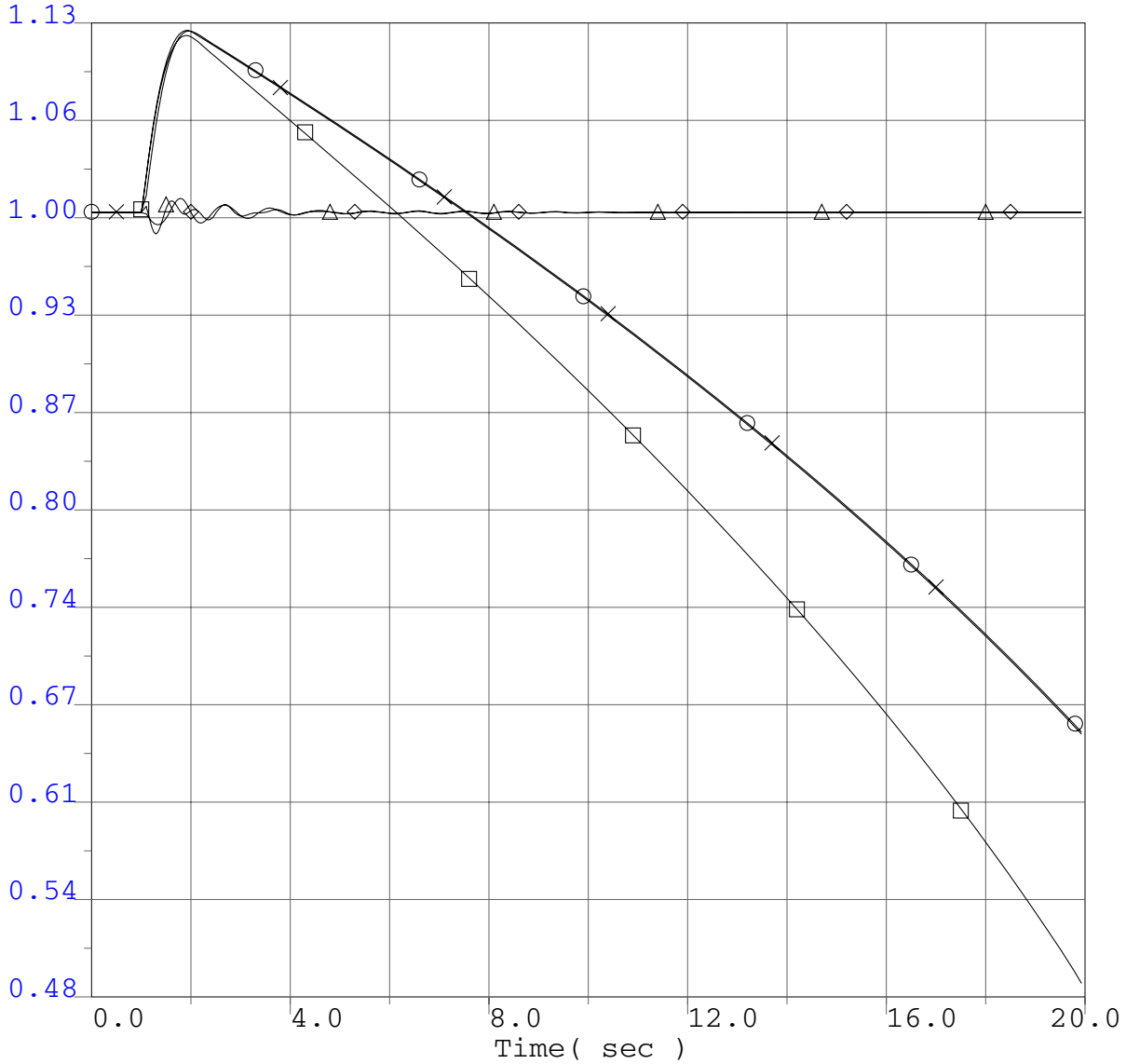

○	0.4759	spd	31180	P0411G1	13.8	"1" 1	1.1264
×	0.4759	spd	31181	P0411G2	13.8	"5" 1	1.1264
□	0.4759	spd	31182	P0411G3	13.8	"8" 1	1.1264
△	0.4759	spd	31150	FAIRHAVN	13.8	"1" 1	1.1264
◇	0.4759	spd	31158	LP SAMOA	12.5	"1" 1	1.1264

P0411 Project System Impact Study
2008 Summer Peak Base Case
P0411 @ 166.4MW
Humboldt Bay PP Bus outage
3 ph 6 cyc flt @ Humboldt Bay PP 60kV bus & clr HBay 60kV bus

P0411 Project System Impact Study

Project Generator Terminal Power

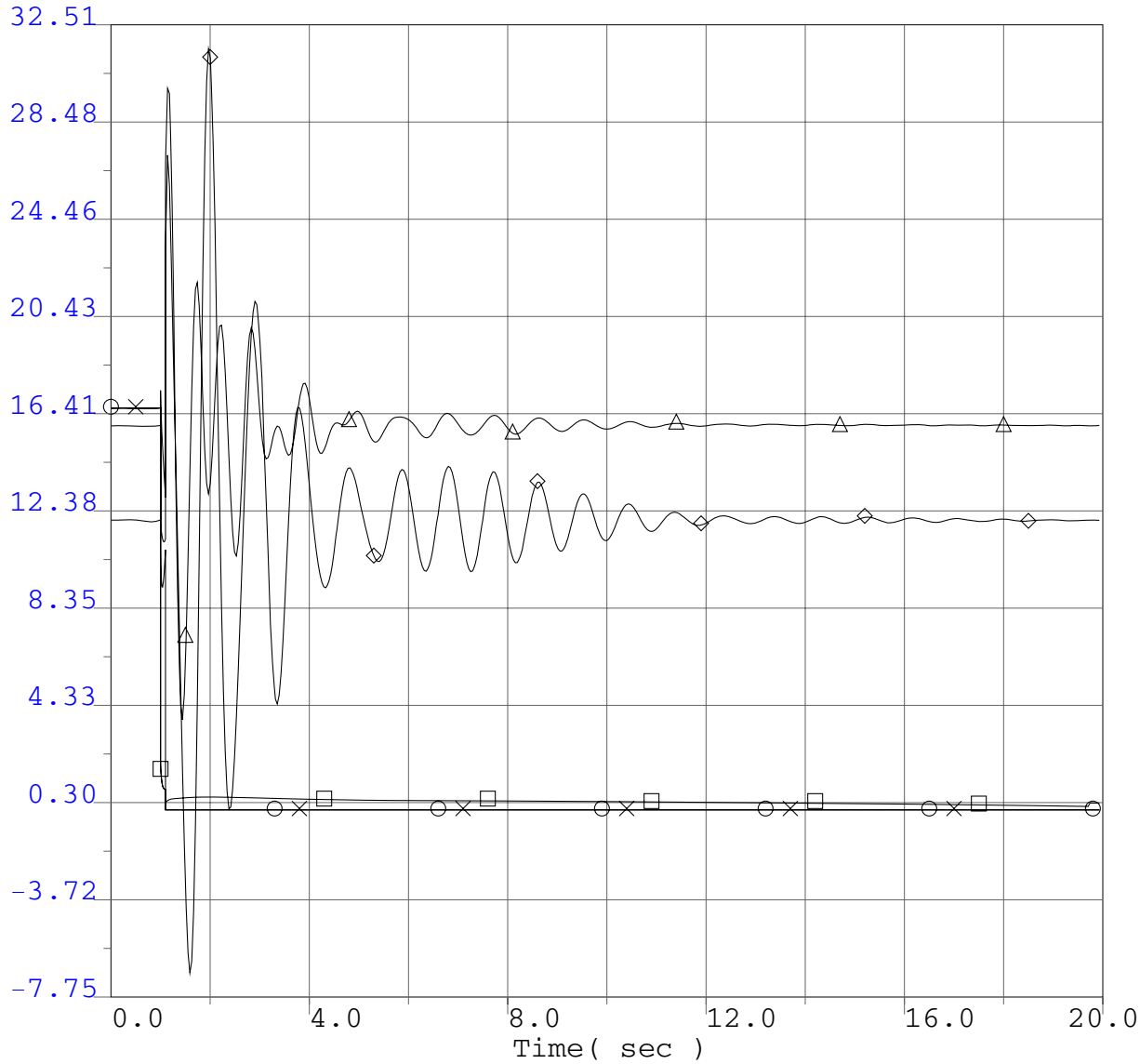

○	-7.75	pg	31180	P0411G1	13.8	"1"	1	32.51
×	-7.75	pg	31181	P0411G2	13.8	"5"	1	32.51
□	-7.75	pg	31182	P0411G3	13.8	"8"	1	32.51
△	-7.75	pg	31150	FAIRHAVN	13.8	"1"	1	32.51
◇	-7.75	pg	31158	LP SAMOA	12.5	"1"	1	32.51

P0411 Project System Impact Study
2008 Summer Peak Base Case
P0411 @ 166.4MW
Humboldt Bay PP Bus outage
3 ph 6 cyc flt @ Humboldt Bay PP 60kV bus & clr HBay 60kV bus

P0411 Project System Impact Study

Project Generator Terminal Reactive Power

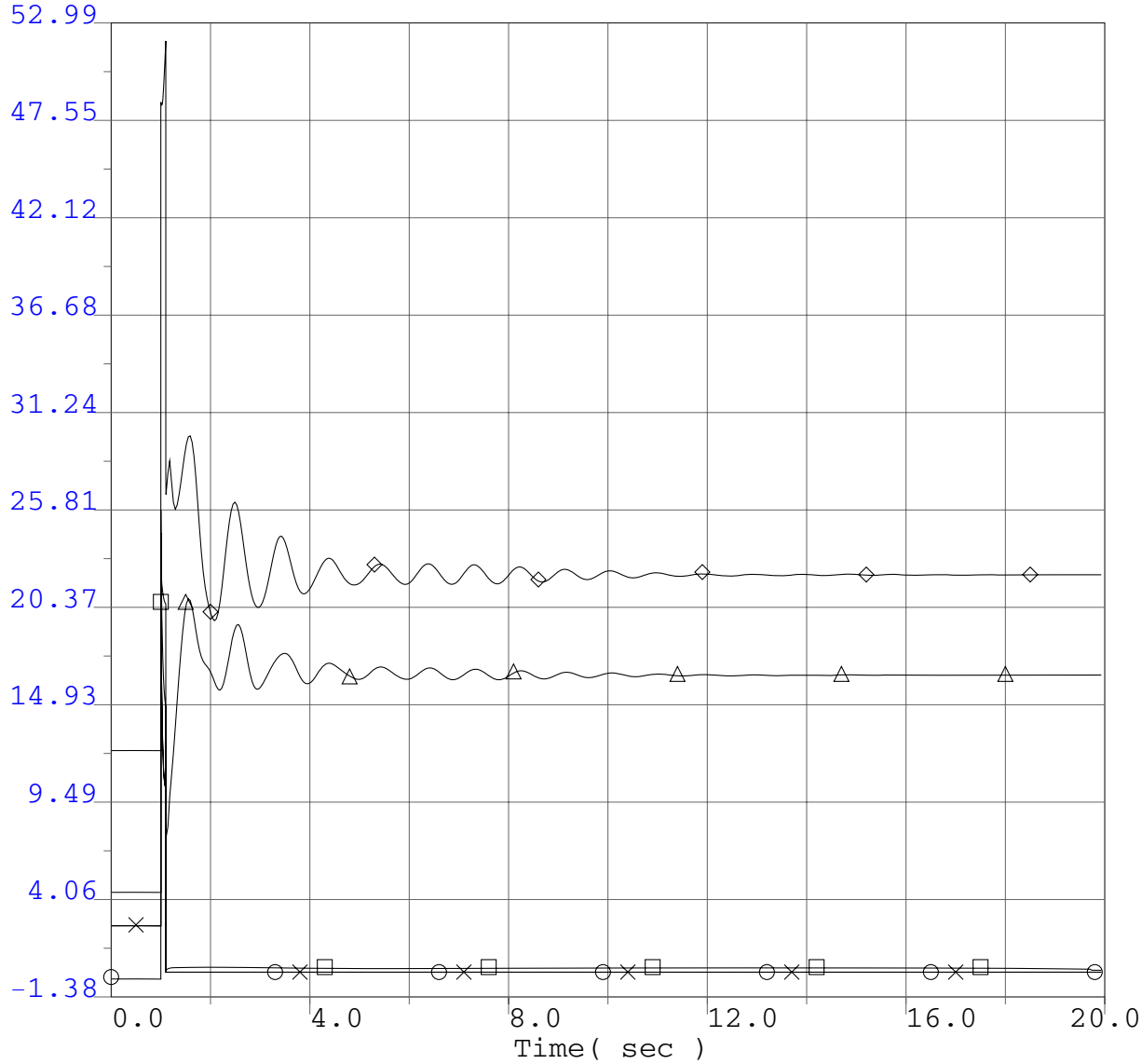

○	-1.38	qg	31180	P0411G1	13.8	"1"	1	52.99
×	-1.38	qg	31181	P0411G2	13.8	"5"	1	52.99
□	-1.38	qg	31182	P0411G3	13.8	"8"	1	52.99
△	-1.38	qg	31150	FAIRHAVN	13.8	"1"	1	52.99
◇	-1.38	qg	31158	LP SAMOA	12.5	"1"	1	52.99

P0411 Project System Impact Study
2008 Summer Peak Base Case
P0411 @ 166.4MW
Humboldt Bay PP Bus outage
3 ph 6 cyc flt @ Humboldt Bay PP 60kV bus & clr HBay 60kV bus

P0411 Project System Impact Study

Selected WECC Bus Voltage Plots

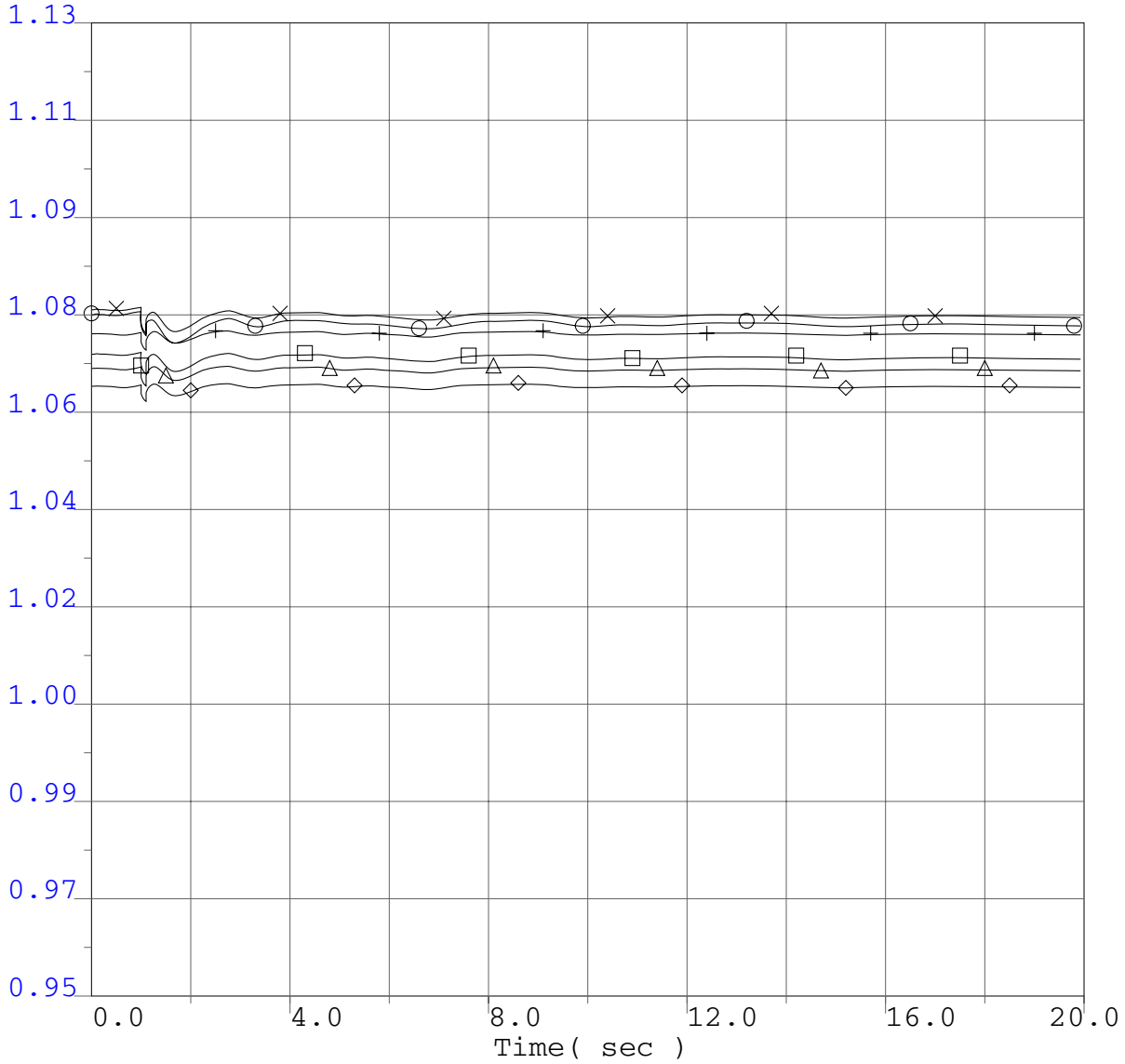

○	0.95	vbus	40687	MALIN	500.0	"*" 1	1.13
×	0.95	vbus	30005	ROUND MT	500.0	"*" 1	1.13
□	0.95	vbus	30015	TABLE MT	500.0	"*" 1	1.13
△	0.95	vbus	30030	VACA-DIX	500.0	"*" 1	1.13
◇	0.95	vbus	30040	TESLA	500.0	"*" 1	1.13
+	0.95	vbus	30035	TRACY	500.0	"*" 1	1.13

P0411 Project System Impact Study
2008 Summer Peak Base Case
P0411 @ 166.4MW
Humboldt Bay PP Bus outage
3 ph 6 cyc flt @ Humboldt Bay PP 60kV bus & clr HBay 60kV bus

P0411 Project System Impact Study

Selected WECC Bus Voltage Plots

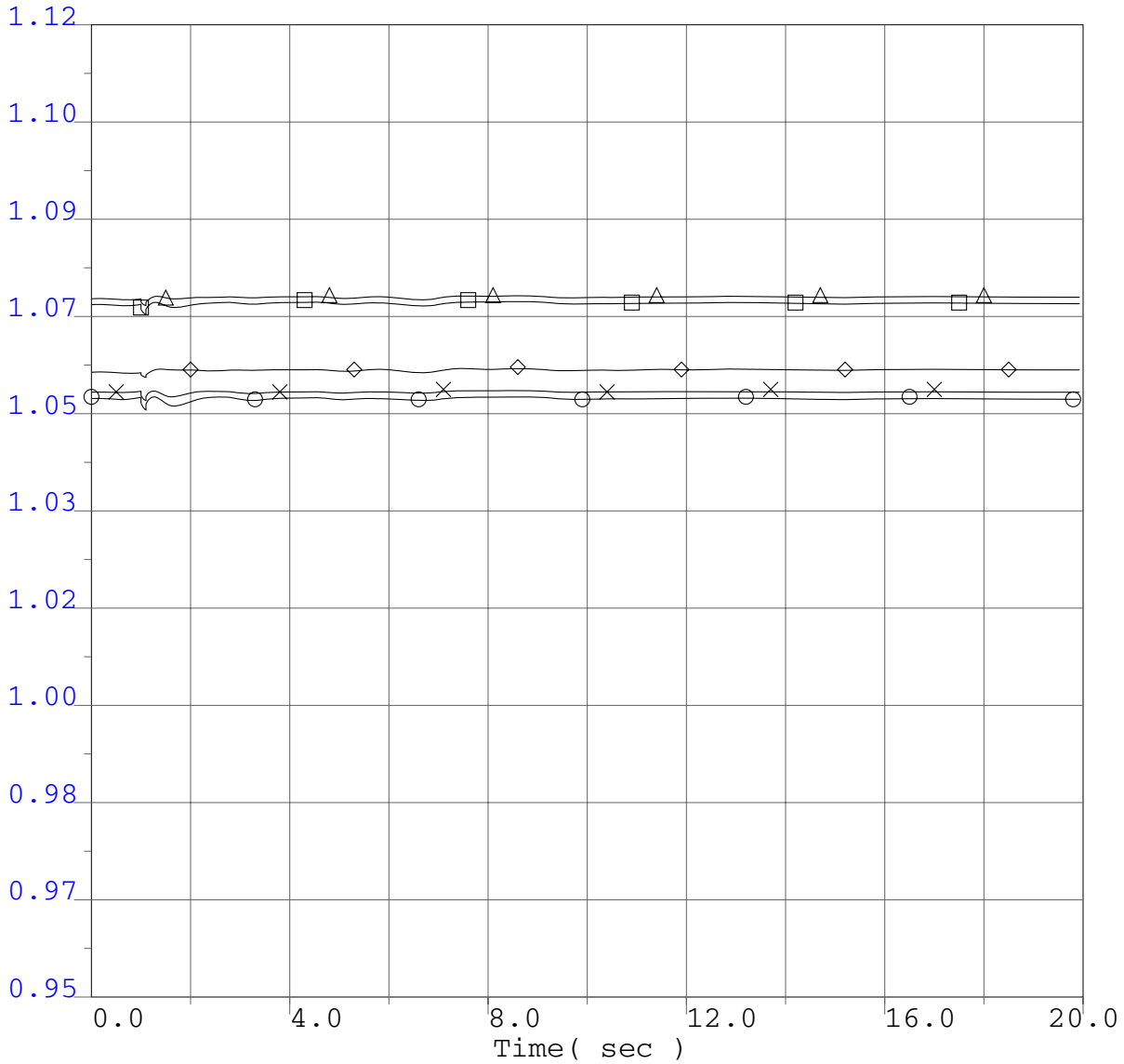

○	0.95	vbus	30042	METCALF	500.0	"*"	1	1.12
×	0.95	vbus	30045	MOSSLAND	500.0	"*"	1	1.12
□	0.95	vbus	30050	LOSBANOS	500.0	"*"	1	1.12
△	0.95	vbus	30055	GATES	500.0	"*"	1	1.12
◇	0.95	vbus	30060	MIDWAY	500.0	"*"	1	1.12

P0411 Project System Impact Study
2008 Summer Peak Base Case
P0411 @ 166.4MW
Humboldt Bay PP Bus outage
3 ph 6 cyc flt @ Humboldt Bay PP 60kV bus & clr HBay 60kV bus

P0411 Project System Impact Study

Selected WECC Bus Voltage Plots

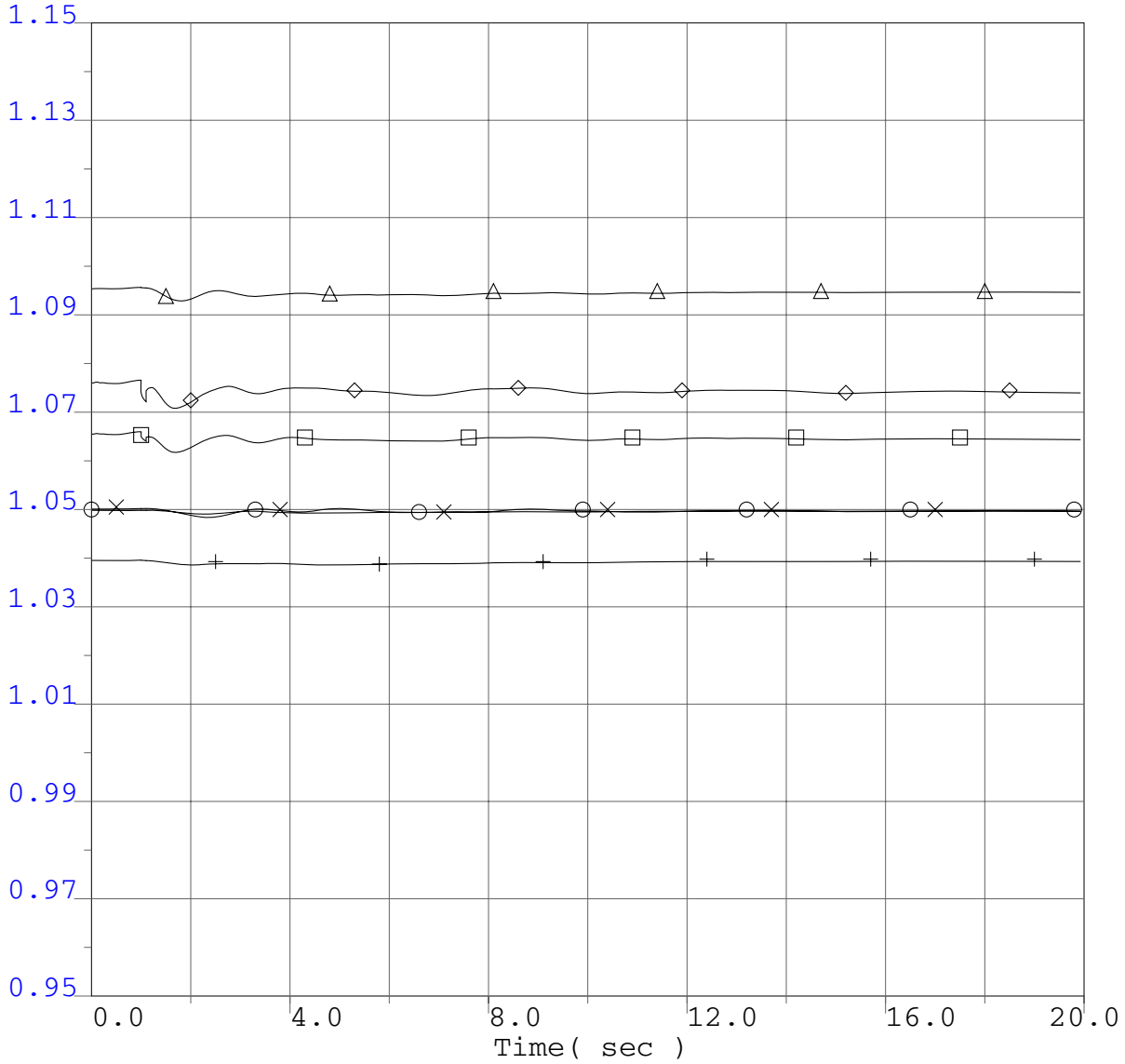

○	0.95	vbus	14001	FOURCORN	500.0	"*" 1	1.15
×	0.95	vbus	50703	NIC500	500.0	"*" 1	1.15
□	0.95	vbus	60240	MIDPOINT	500.0	"*" 1	1.15
△	0.95	vbus	62012	TOWN2	500.0	"*" 1	1.15
◇	0.95	vbus	40687	MALIN	500.0	"*" 1	1.15
+	0.95	vbus	66340	SIGURD	345.0	"*" 1	1.15

P0411 Project System Impact Study
2008 Summer Peak Base Case
P0411 @ 166.4MW
Humboldt Bay PP Bus outage
3 ph 6 cyc flt @ Humboldt Bay PP 60kV bus & clr HBay 60kV bus

P0411 Project System Impact Study

Selected WECC Bus Voltage Plots

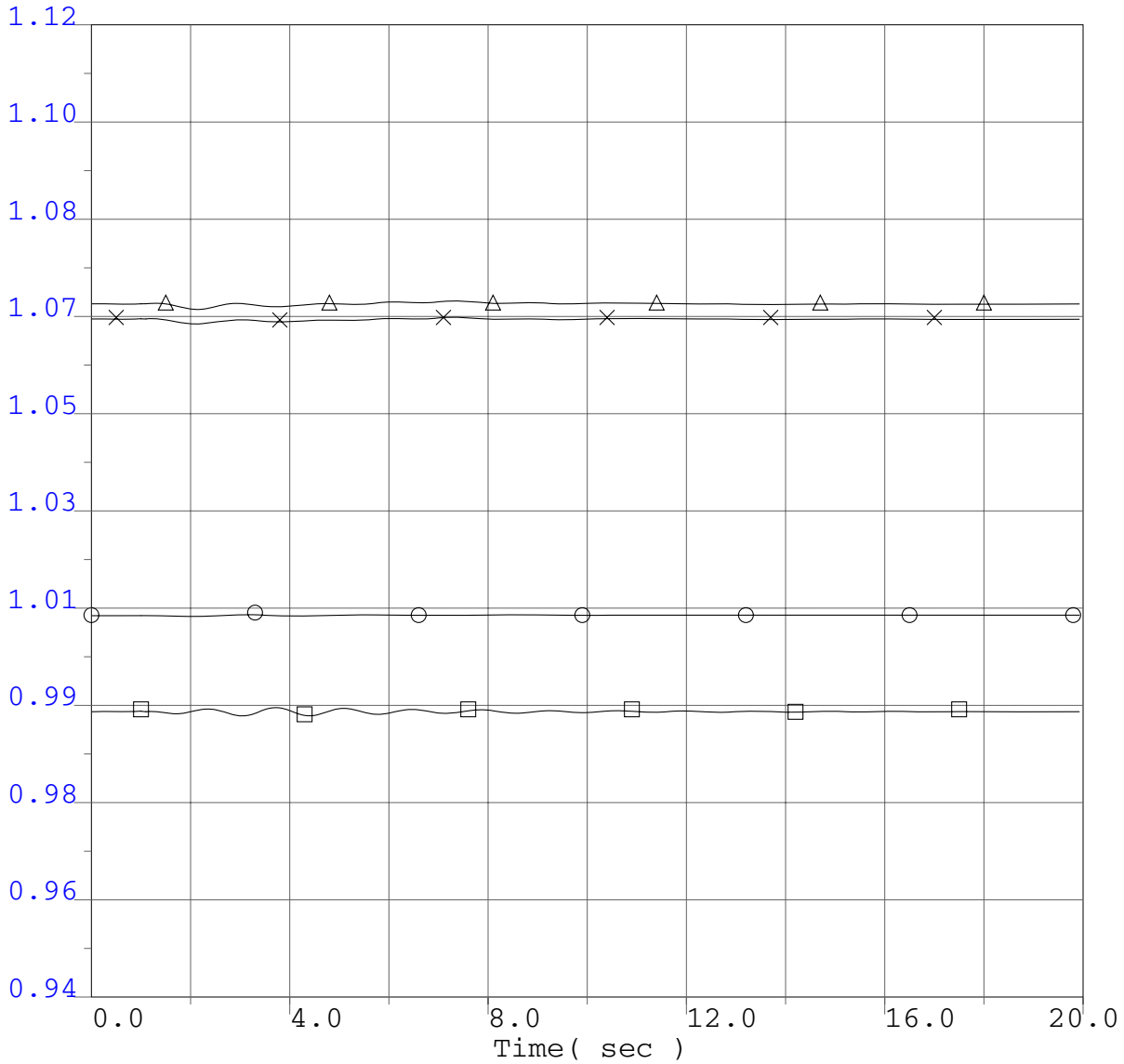

○ 0.94	vbus	54150	LANGDON2	500.0	"*"	1	1.12
× 0.94	vbus	14003	NAVAJO	500.0	"*"	1	1.12
□ 0.94	vbus	24153	VESTAL	230.0	"*"	1	1.12
△ 0.94	vbus	22360	IMPRLVLY	500.0	"*"	1	1.12

P0411 Project System Impact Study
2008 Summer Peak Base Case
P0411 @ 166.4MW
Humboldt Bay PP Bus outage
3 ph 6 cyc flt @ Humboldt Bay PP 60kV bus & clr HBay 60kV bus

P0411 Project System Impact Study

Selected WECC Bus Frequency Plots

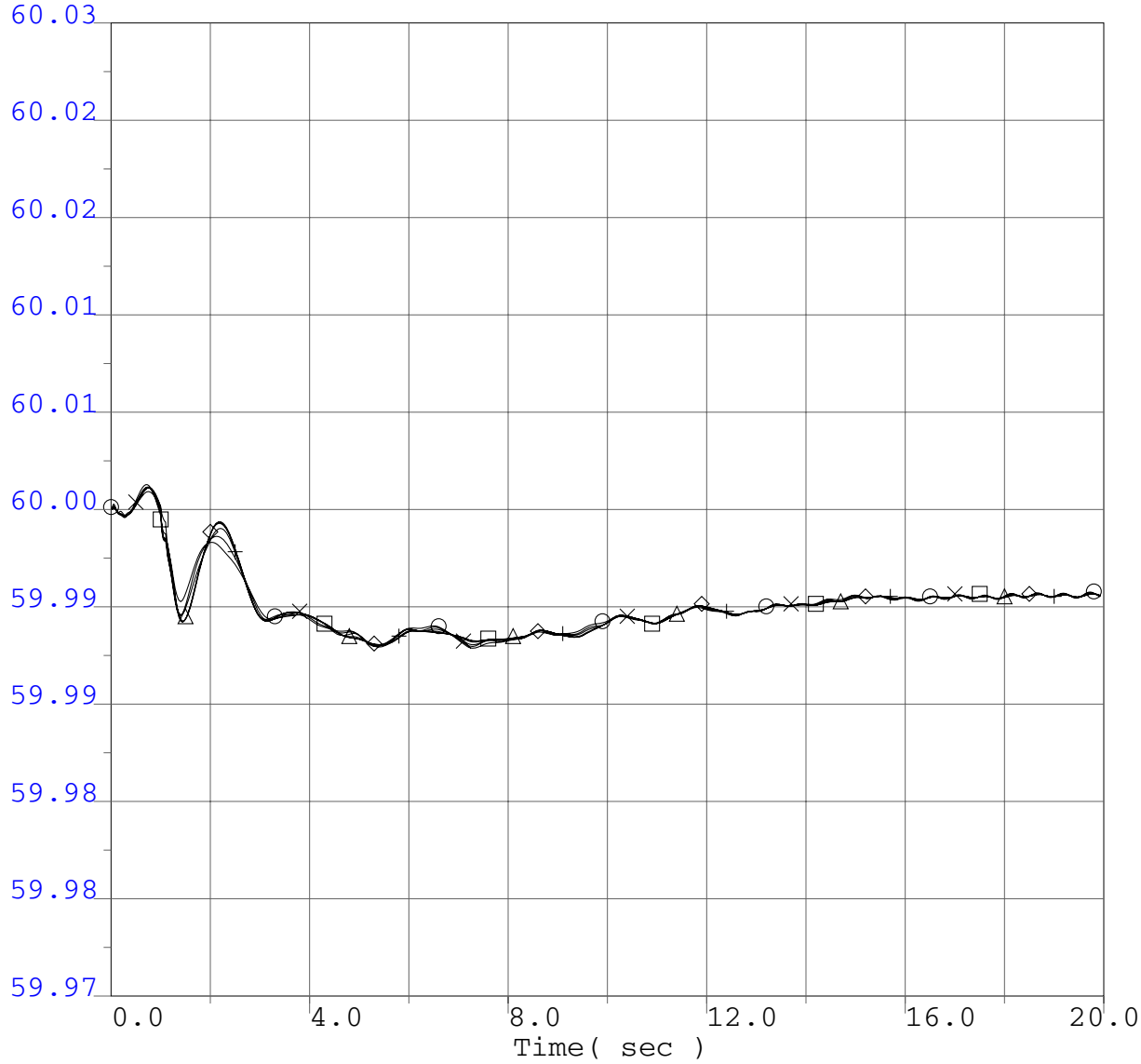

○ 59.97	fbus	40687	MALIN	500.0	"*"	1	60.03
× 59.97	fbus	30005	ROUND MT	500.0	"*"	1	60.03
□ 59.97	fbus	30015	TABLE MT	500.0	"*"	1	60.03
△ 59.97	fbus	30030	VACA-DIX	500.0	"*"	1	60.03
◇ 59.97	fbus	30040	TESLA	500.0	"*"	1	60.03
+ 59.97	fbus	30035	TRACY	500.0	"*"	1	60.03

P0411 Project System Impact Study
2008 Summer Peak Base Case
P0411 @ 166.4MW
Humboldt Bay PP Bus outage
3 ph 6 cyc flt @ Humboldt Bay PP 60kV bus & clr HBay 60kV bus

P0411 Project System Impact Study

Selected WECC Bus Frequency Plots

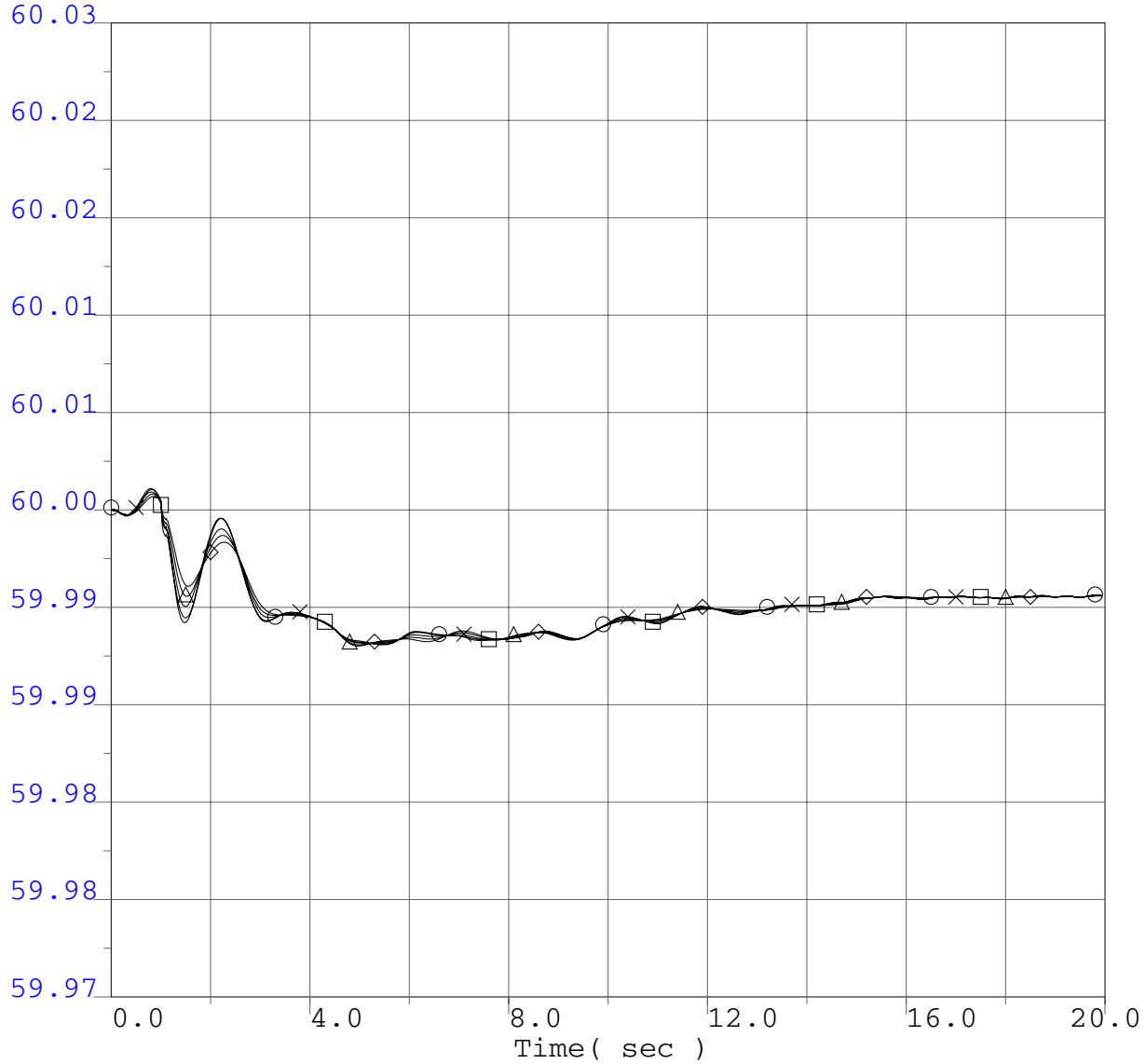

○ 59.97	fbus	30042	METCALF	500.0	"*"	1	60.03
× 59.97	fbus	30045	MOSSLAND	500.0	"*"	1	60.03
□ 59.97	fbus	30050	LOSBANOS	500.0	"*"	1	60.03
△ 59.97	fbus	30055	GATES	500.0	"*"	1	60.03
◇ 59.97	fbus	30060	MIDWAY	500.0	"*"	1	60.03

P0411 Project System Impact Study
2008 Summer Peak Base Case
P0411 @ 166.4MW
Humboldt Bay PP Bus outage
3 ph 6 cyc flt @ Humboldt Bay PP 60kV bus & clr HBay 60kV bus

P0411 Project System Impact Study

Selected WECC Bus Frequency Plots

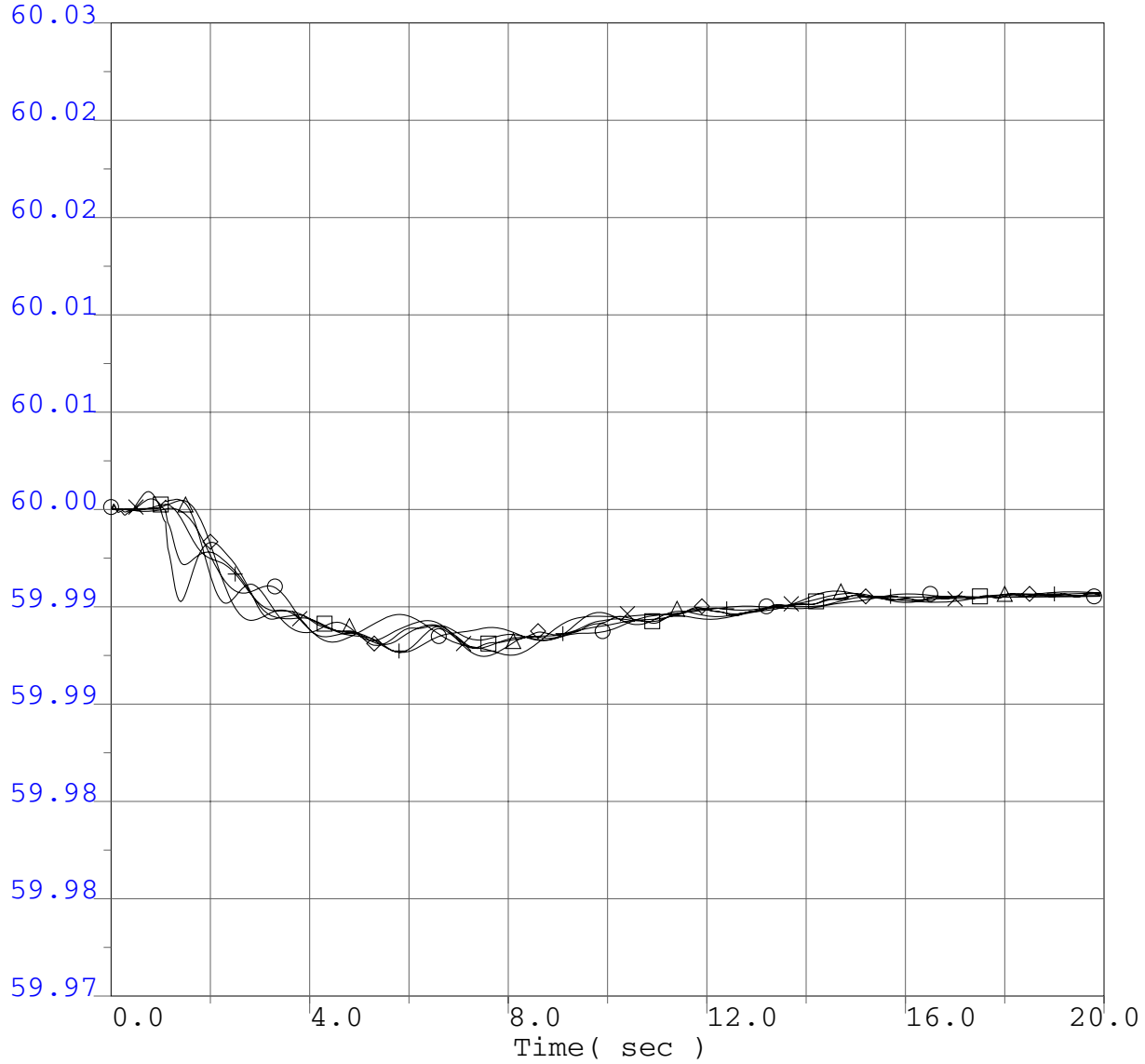

○ 59.97	fbus	14001	FOURCORN	500.0	"*"	1	60.03
× 59.97	fbus	50703	NIC500	500.0	"*"	1	60.03
□ 59.97	fbus	60240	MIDPOINT	500.0	"*"	1	60.03
△ 59.97	fbus	62012	TOWN2	500.0	"*"	1	60.03
◇ 59.97	fbus	40687	MALIN	500.0	"*"	1	60.03
+ 59.97	fbus	66340	SIGURD	345.0	"*"	1	60.03

P0411 Project System Impact Study
2008 Summer Peak Base Case
P0411 @ 166.4MW
Humboldt Bay PP Bus outage
3 ph 6 cyc flt @ Humboldt Bay PP 60kV bus & clr HBay 60kV bus

P0411 Project System Impact Study

Selected WECC Bus Frequency Plots

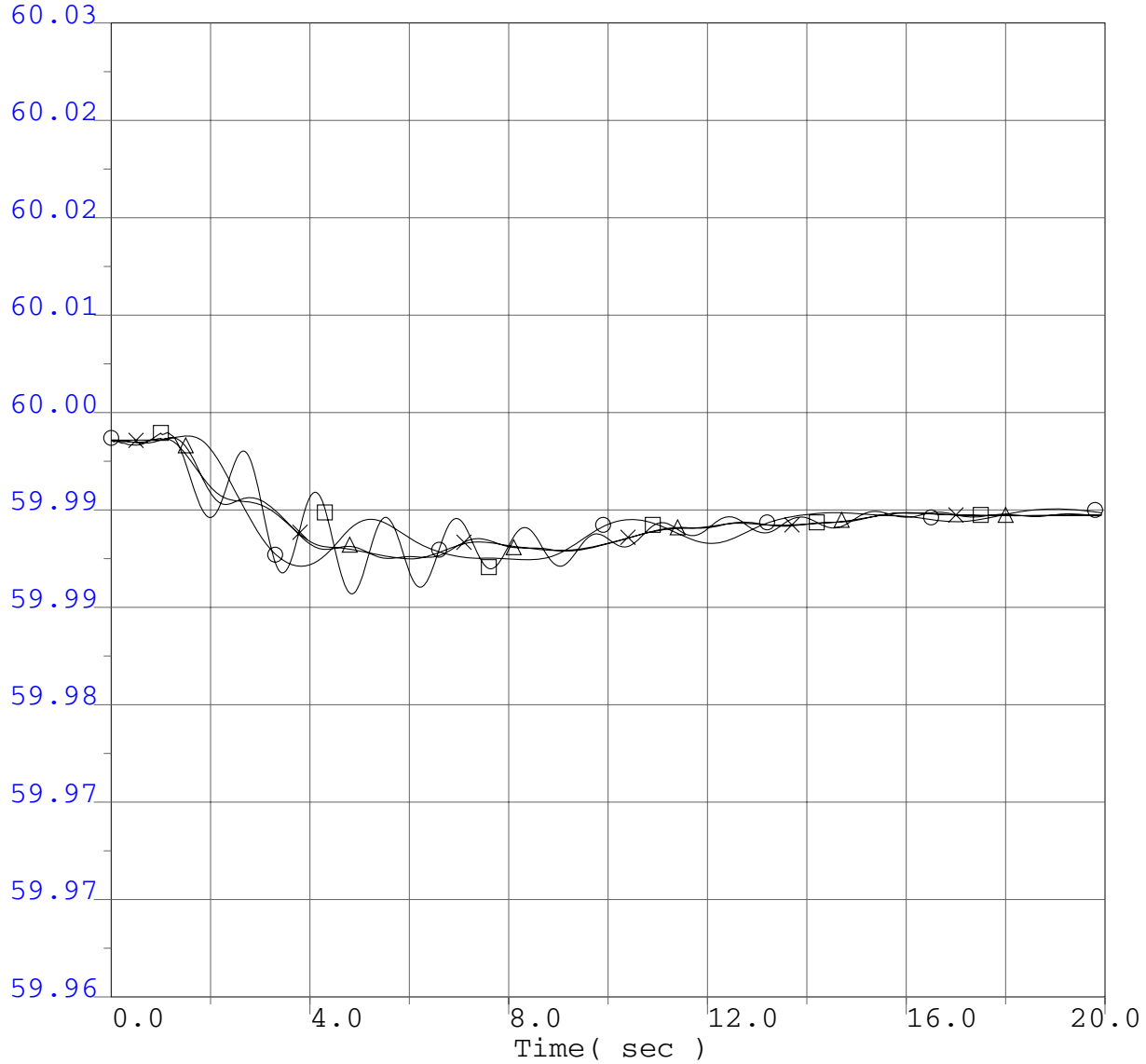

○ 59.96	fbus	54150	LANGDON2	500.0	"*"	1	60.03
× 59.96	fbus	14003	NAVAJO	500.0	"*"	1	60.03
□ 59.96	fbus	24153	VESTAL	230.0	"*"	1	60.03
△ 59.96	fbus	22360	IMPRLVLY	500.0	"*"	1	60.03

P0411 Project System Impact Study
2008 Summer Peak Base Case
P0411 @ 166.4MW
Humboldt Bay PP Bus outage
3 ph 6 cyc flt @ Humboldt Bay PP 60kV bus & clr HBay 60kV bus

P0411 Project System Impact Study

WECC Generator Rotor Angle

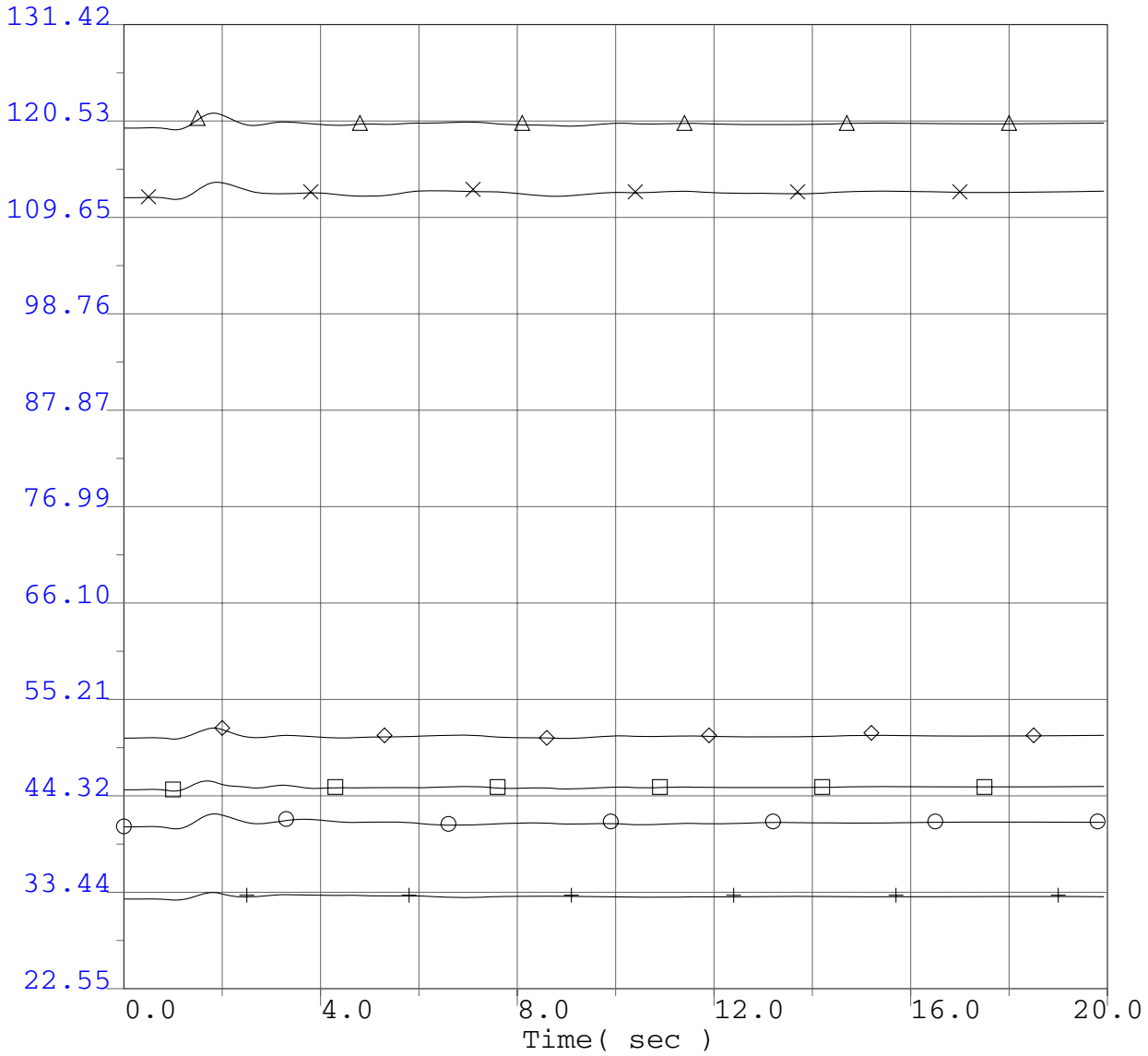

○	22.55	ang	14914	FCNGN4CC	22.0	"H" 1	131.42
×	22.55	ang	50500	GMS G6	13.8	"1" 1	131.42
□	22.55	ang	60100	BRWNL 5	13.8	"1" 1	131.42
△	22.55	ang	62048	COLSTP 3	26.0	"1" 1	131.42
◇	22.55	ang	41701	JONDAY01	13.8	"1" 1	131.42
+	22.55	ang	36411	DIABLO 1	25.0	"1" 1	131.42

P0411 Project System Impact Study
2008 Summer Peak Base Case
P0411 @ 166.4MW
Humboldt Bay PP Bus outage
3 ph 6 cyc flt @ Humboldt Bay PP 60kV bus & clr HBay 60kV bus

P0411 Project System Impact Study

WECC Generator Rotor Angle

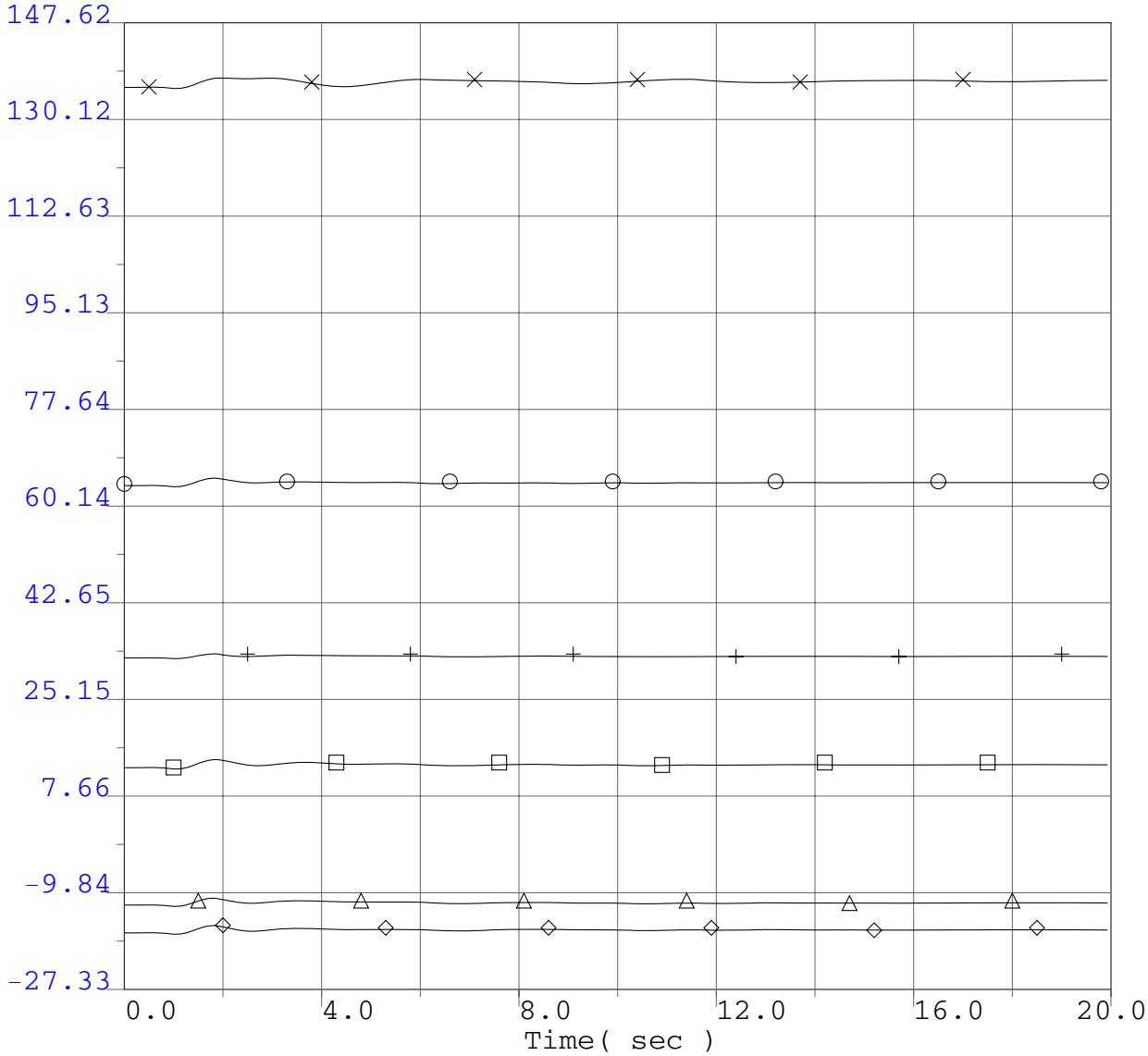

○	-27.33	ang	65490	EHUNTR 1	24.0	"1" 1	147.62
×	-27.33	ang	54280	SUND#2GN	18.0	"2" 1	147.62
□	-27.33	ang	79151	GLENC3-4	13.8	"3" 1	147.62
△	-27.33	ang	24130	S.ONOFR3	22.0	"3" 1	147.62
◇	-27.33	ang	22244	ENCINA 5	24.0	"1" 1	147.62
+	-27.33	ang	36411	DIABLO 1	25.0	"1" 1	147.62

P0411 Project System Impact Study
2008 Summer Peak Base Case
P0411 @ 166.4MW
Humboldt Bay PP Bus outage
3 ph 6 cyc flt @ Humboldt Bay PP 60kV bus & clr HBay 60kV bus

P0411 Project System Impact Study

Selected PG&E Transmission Line Flows (MW)

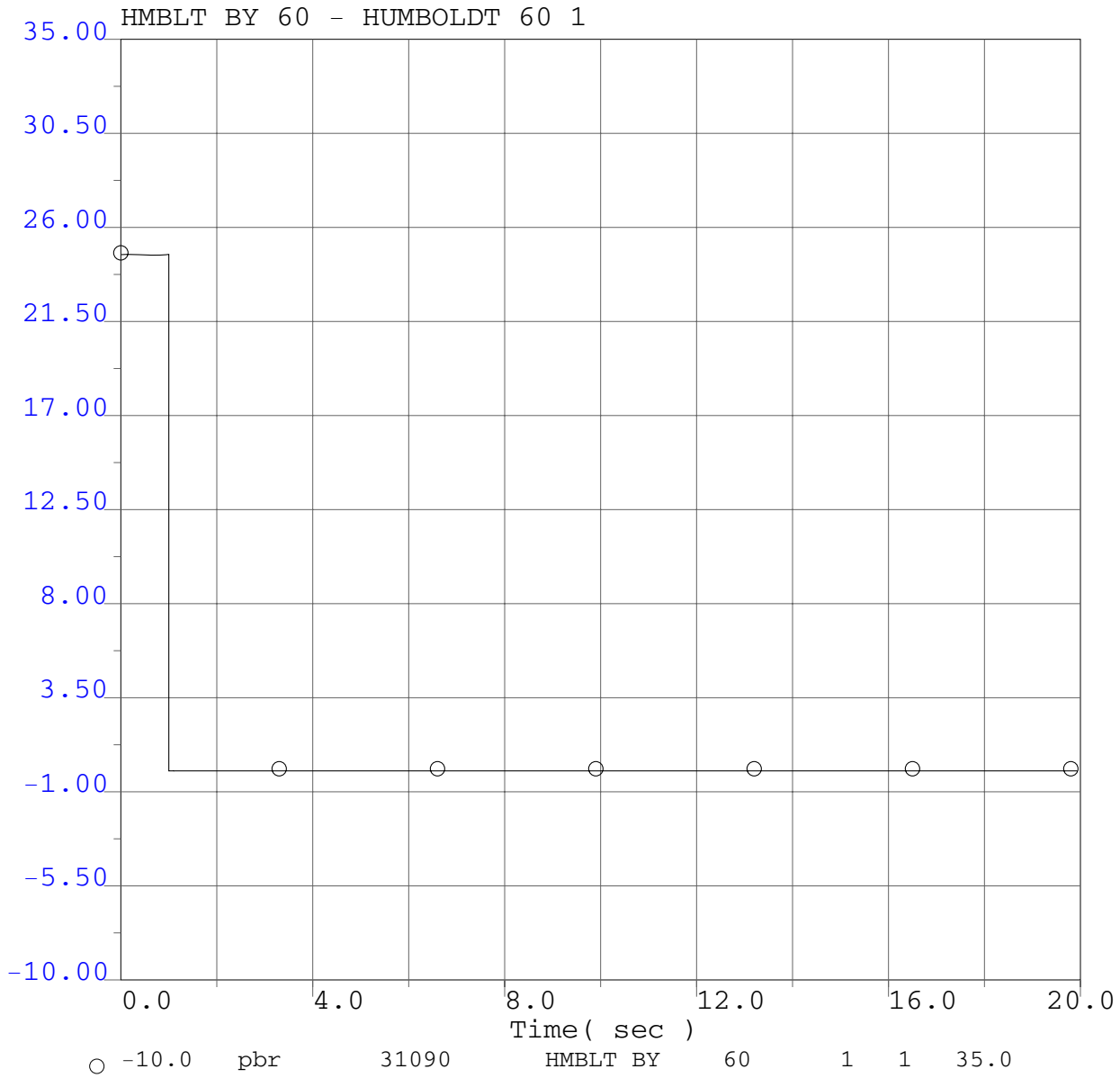

P0411 Project System Impact Study
2008 Summer Peak Base Case
P0411 @ 166.4MW
Humboldt Bay PP Bus outage
3 ph 6 cyc flt @ Humboldt Bay PP 60kV bus & clr HBay 60kV bus

P0411 Project System Impact Study

Selected PG&E Transmission Line Flows (MW)

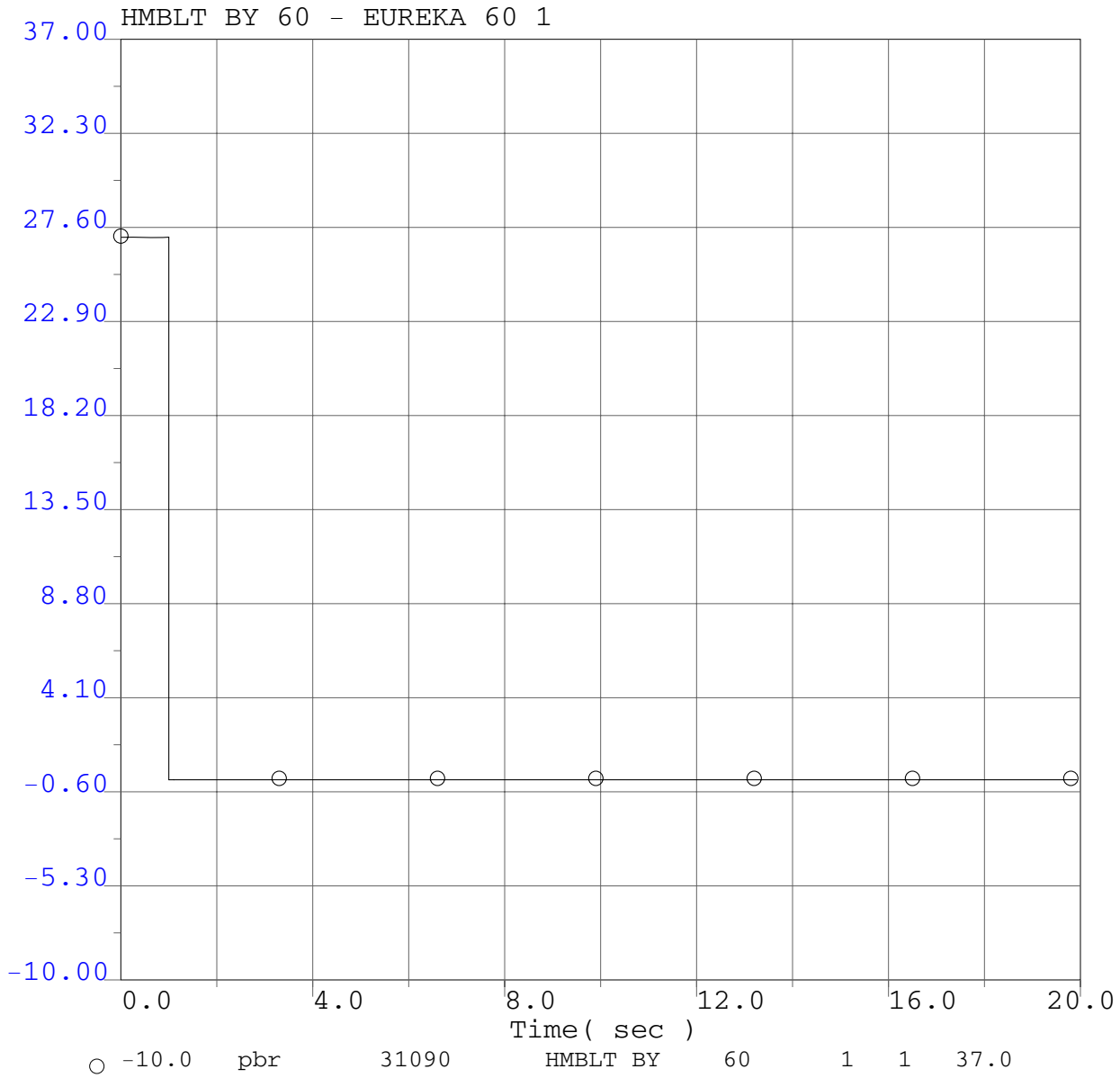

P0411 Project System Impact Study
2008 Summer Peak Base Case
P0411 @ 166.4MW
Humboldt Bay PP Bus outage
3 ph 6 cyc flt @ Humboldt Bay PP 60kV bus & clr HBay 60kV bus

P0411 Project System Impact Study

Selected PG&E Transmission Line Flows (MW)

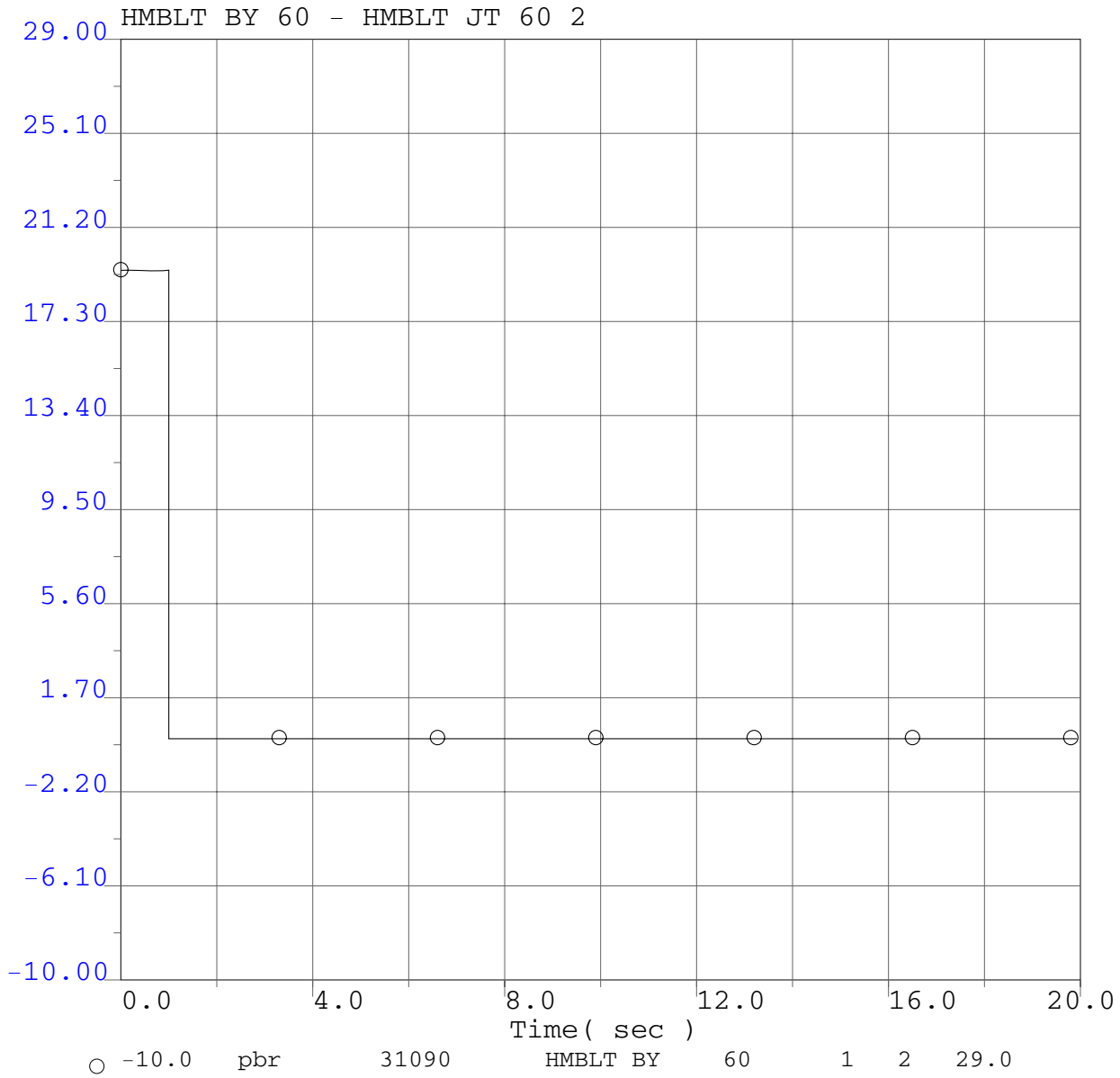

P0411 Project System Impact Study
2008 Summer Peak Base Case
P0411 @ 166.4MW
Humboldt Bay PP Bus outage
3 ph 6 cyc flt @ Humboldt Bay PP 60kV bus & clr HBay 60kV bus

P0411 Project System Impact Study

Selected PG&E Transmission Line Flows (MW)

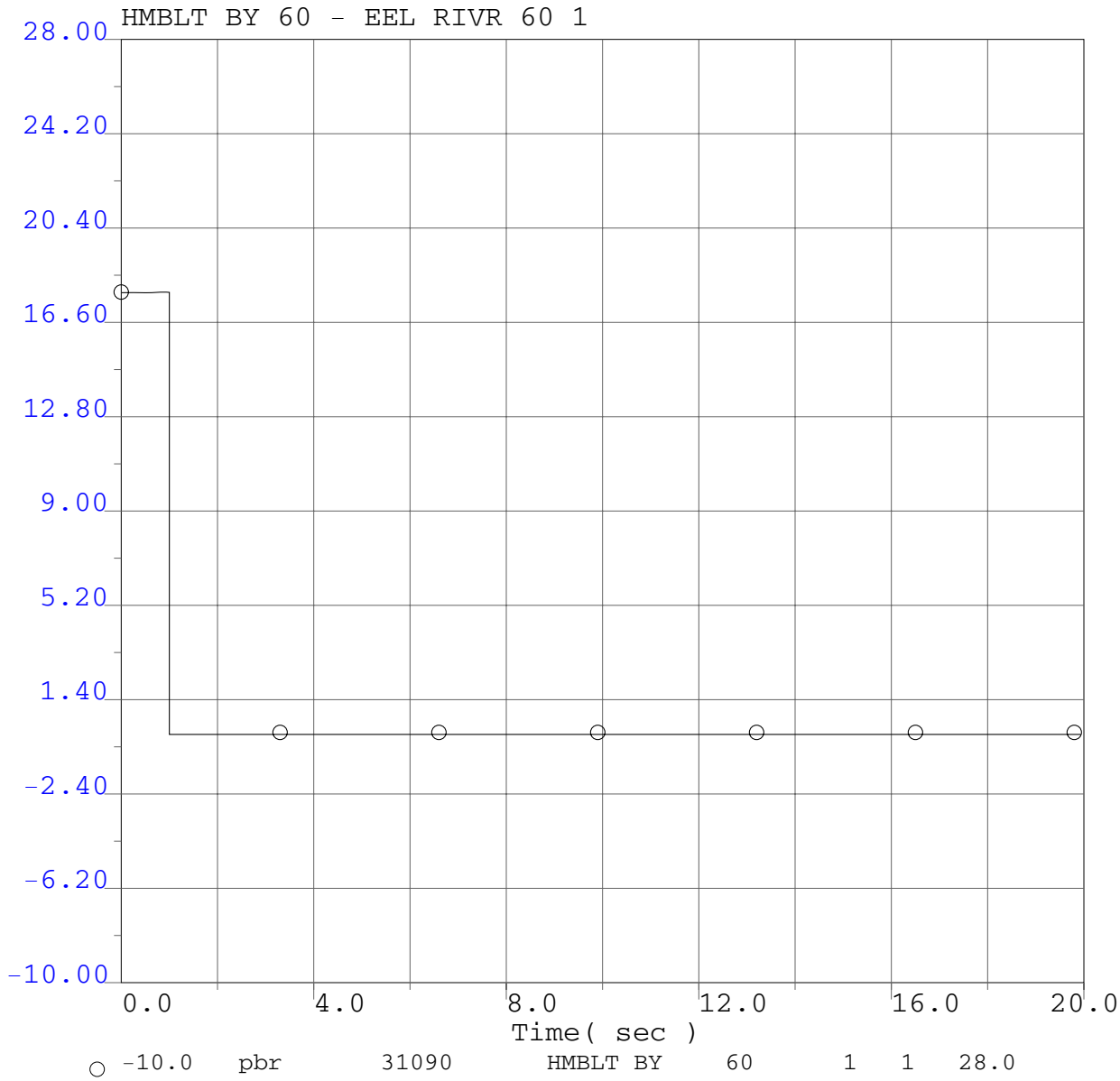

P0411 Project System Impact Study
2008 Summer Peak Base Case
P0411 @ 166.4MW
Humboldt Bay PP Bus outage
3 ph 6 cyc flt @ Humboldt Bay PP 60kV bus & clr HBay 60kV bus

P0411 Project System Impact Study

Selected PG&E Transmission Line Flows (MW)

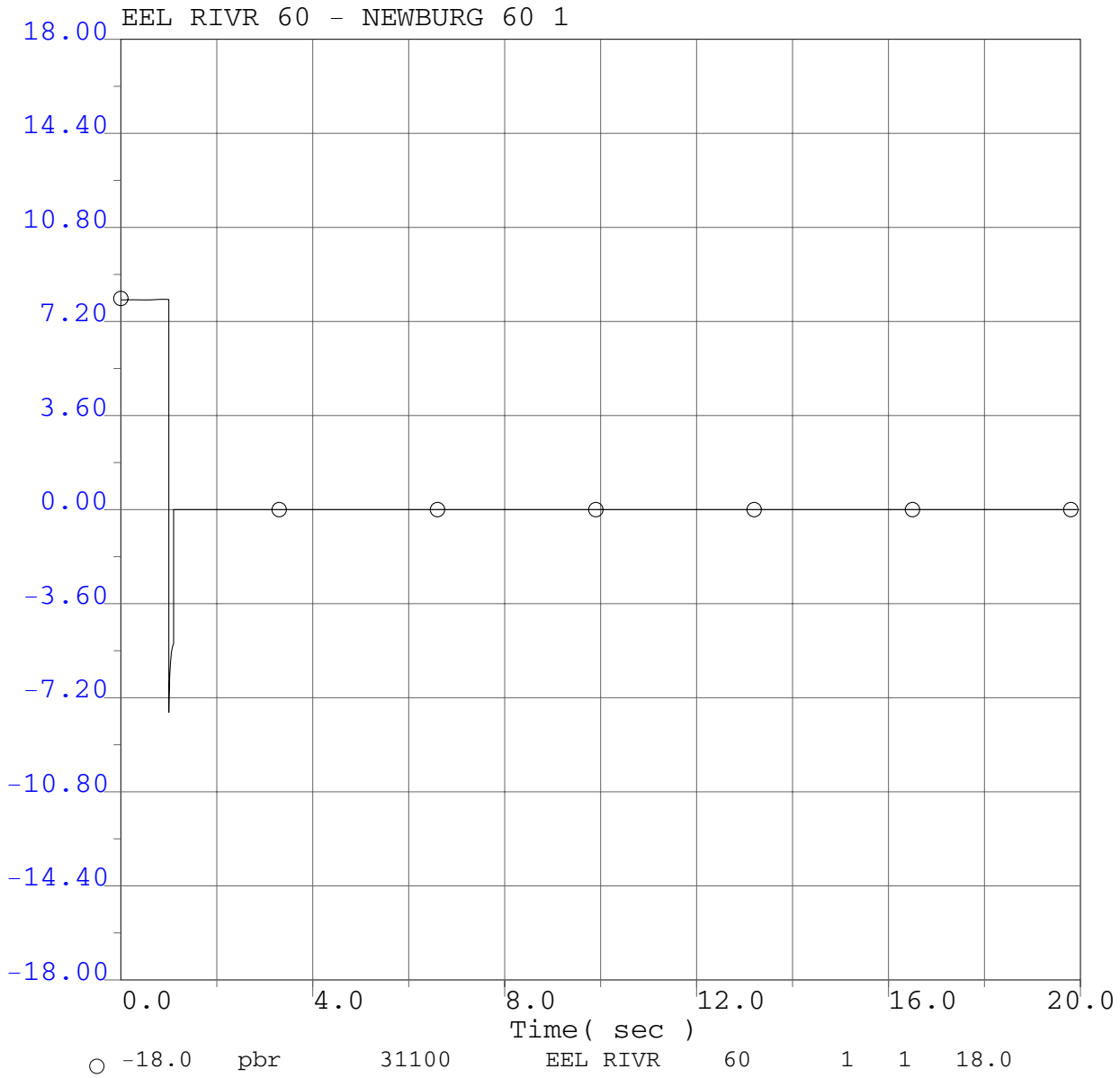

P0411 Project System Impact Study
2008 Summer Peak Base Case
P0411 @ 166.4MW
Humboldt Bay PP Bus outage
3 ph 6 cyc flt @ Humboldt Bay PP 60kV bus & clr HBay 60kV bus

P0411 Project System Impact Study

Selected PG&E Transmission Line Flows (MW)

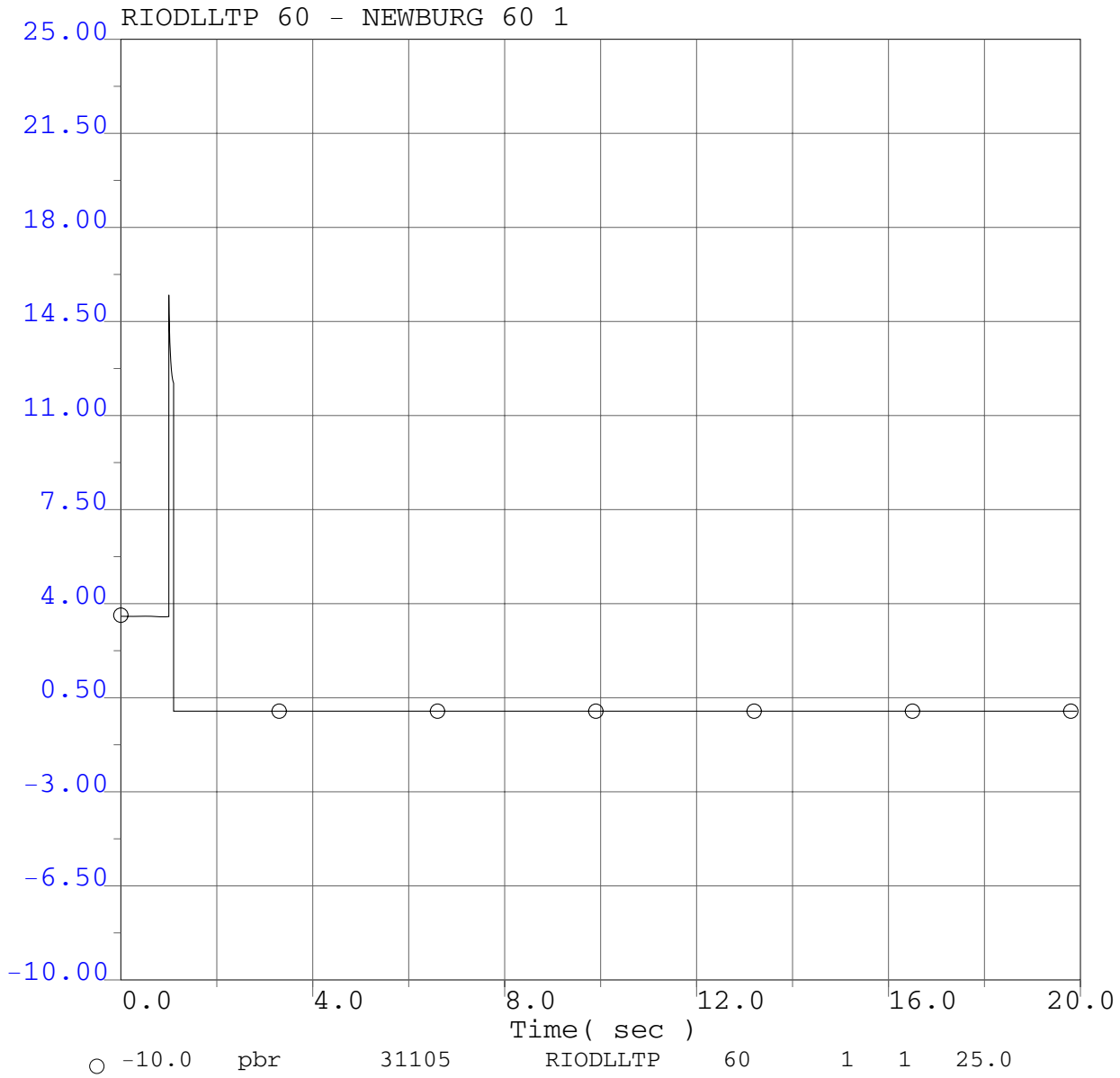

P0411 Project System Impact Study
2008 Summer Peak Base Case
P0411 @ 166.4MW
Humboldt Bay PP Bus outage
3 ph 6 cyc flt @ Humboldt Bay PP 60kV bus & clr HBay 60kV bus

P0411 Project System Impact Study

Selected PG&E Transmission Line Flows (MW)

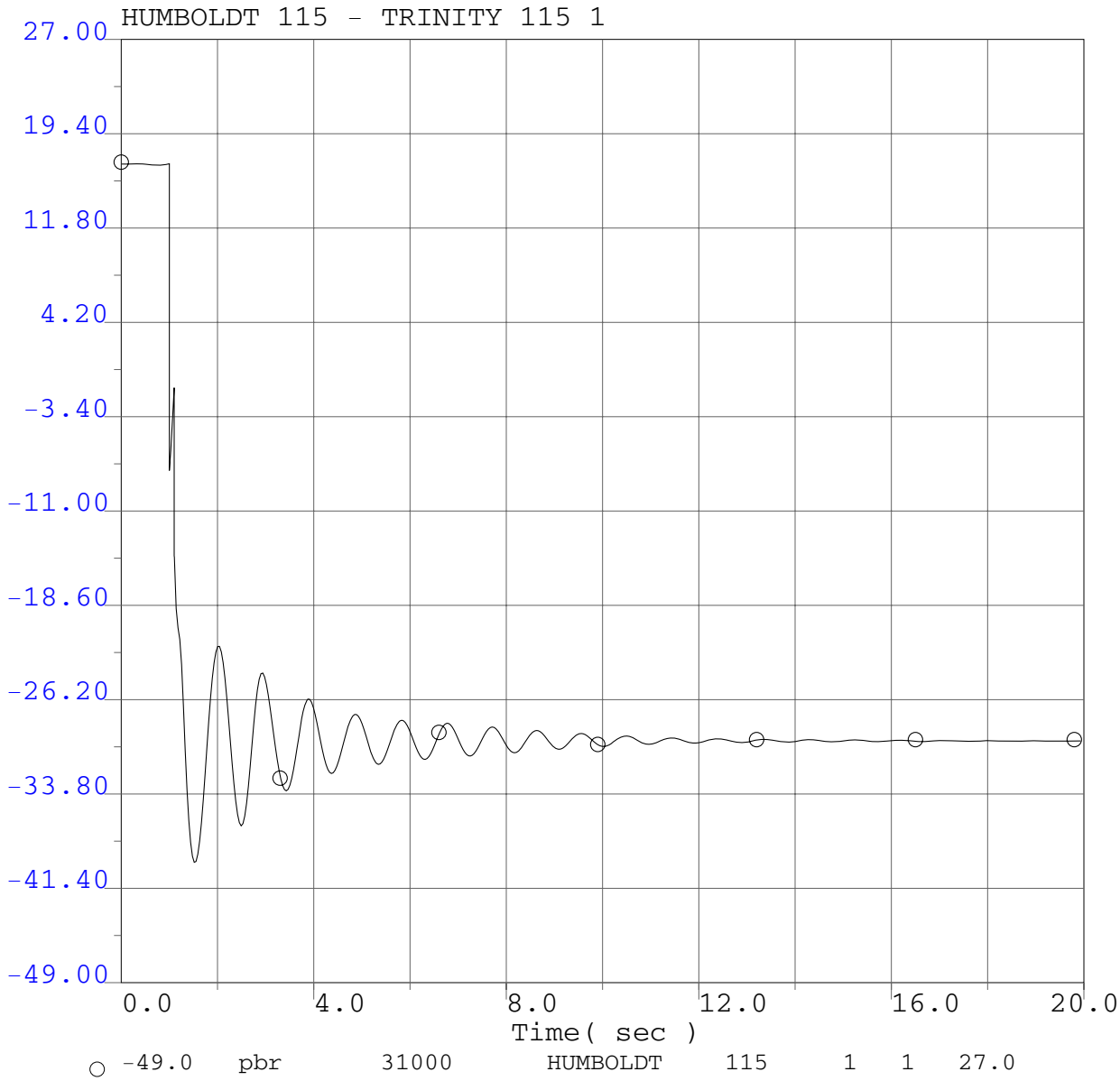

P0411 Project System Impact Study
2008 Summer Peak Base Case
P0411 @ 166.4MW
Humboldt Bay PP Bus outage
3 ph 6 cyc flt @ Humboldt Bay PP 60kV bus & clr HBay 60kV bus

P0411 Project System Impact Study

Selected PG&E Transmission Line Flows (MW)

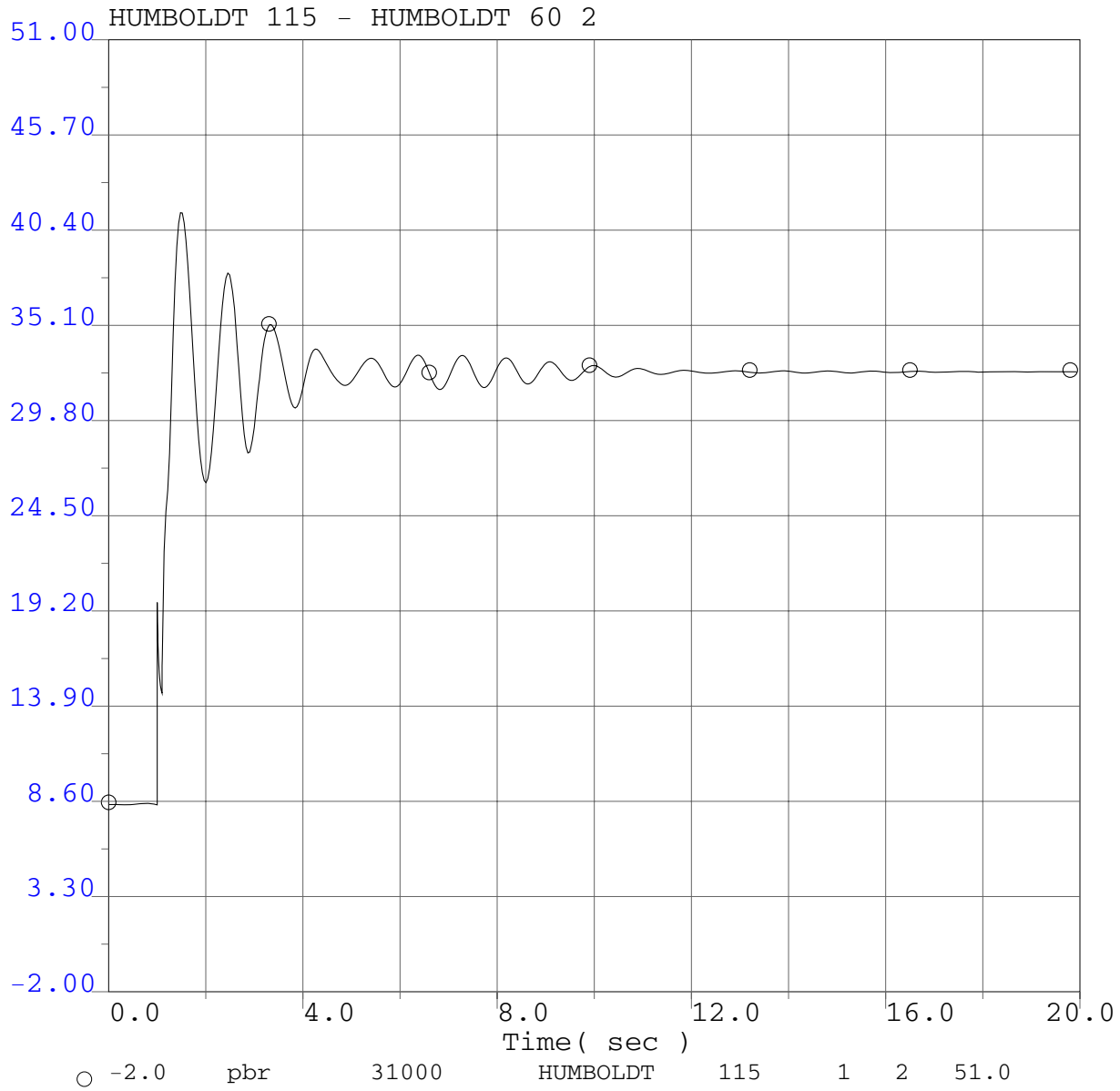

P0411 Project System Impact Study
2008 Summer Peak Base Case
P0411 @ 166.4MW
Humboldt Bay PP Bus outage
3 ph 6 cyc flt @ Humboldt Bay PP 60kV bus & clr HBay 60kV bus

P0411 Project System Impact Study

Selected PG&E Transmission Line Flows (MW)

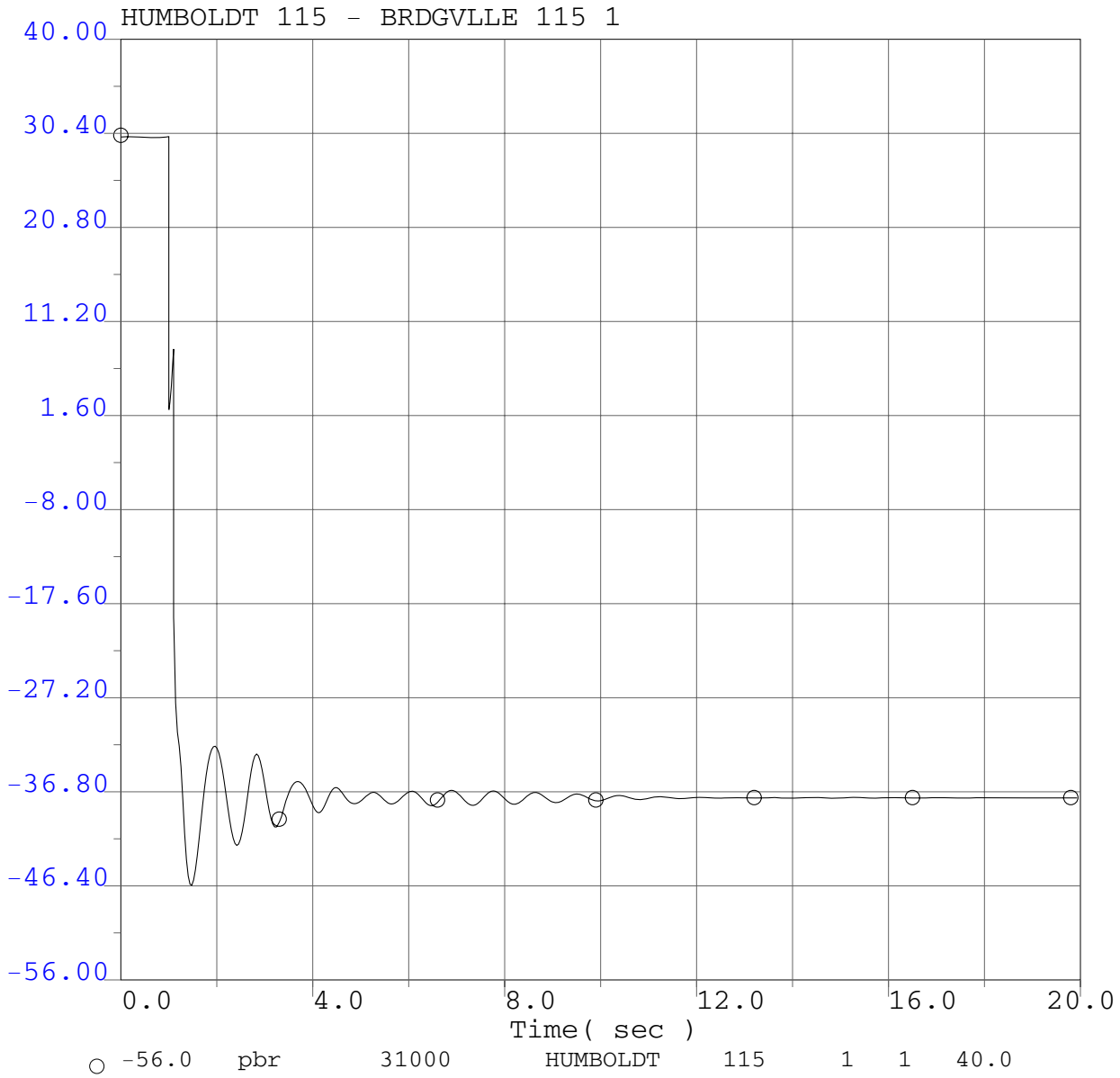

P0411 Project System Impact Study
2008 Summer Peak Base Case
P0411 @ 166.4MW
Humboldt Bay PP Bus outage
3 ph 6 cyc flt @ Humboldt Bay PP 60kV bus & clr HBay 60kV bus

P0411 Project System Impact Study

Selected PG&E Transmission Line Flows (MW)

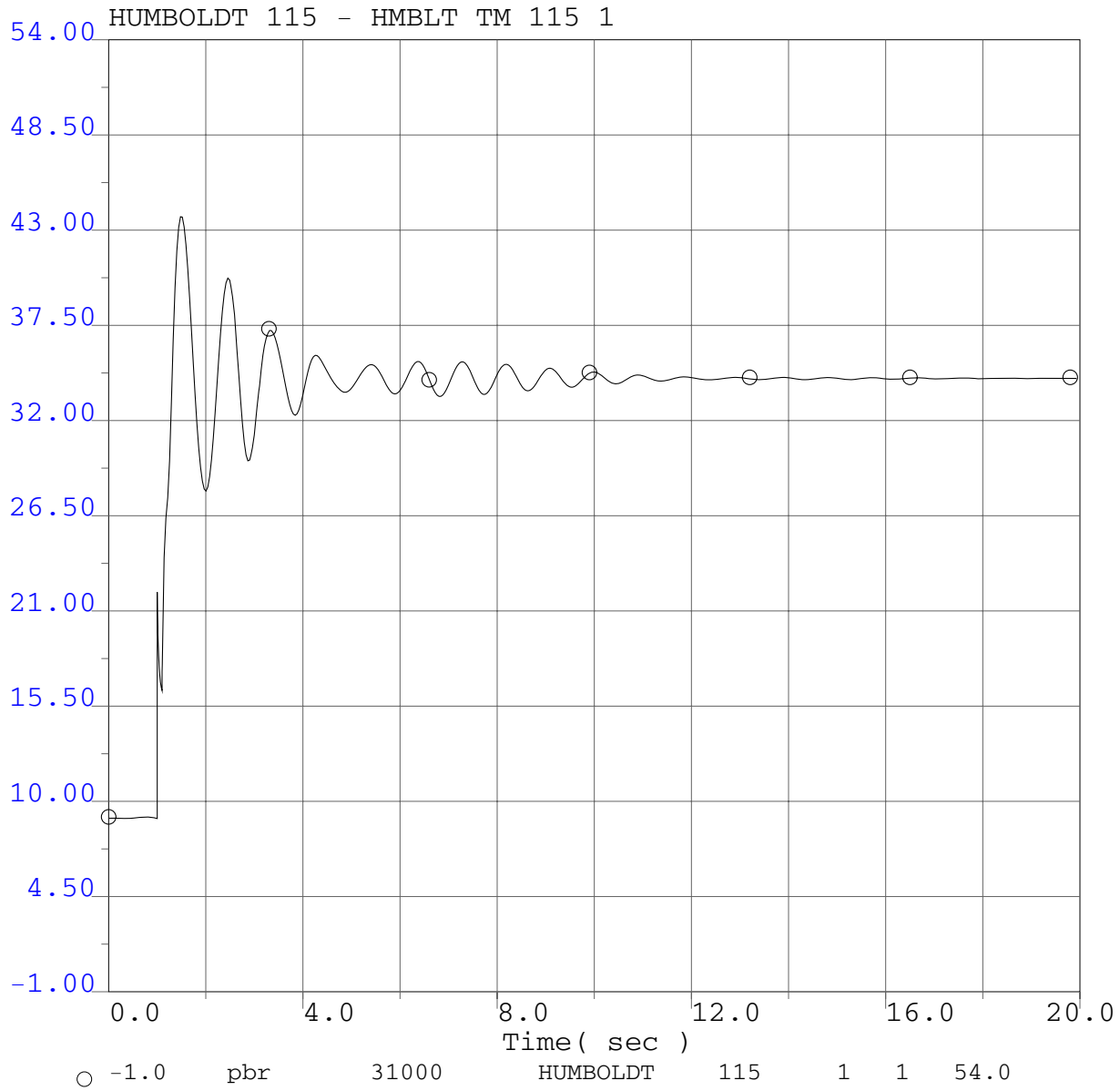

P0411 Project System Impact Study
2008 Summer Peak Base Case
P0411 @ 166.4MW
Humboldt Bay PP Bus outage
3 ph 6 cyc flt @ Humboldt Bay PP 60kV bus & clr HBay 60kV bus

P0411 Project System Impact Study

Selected PG&E Bus Voltage Plots Adjacent to Fault

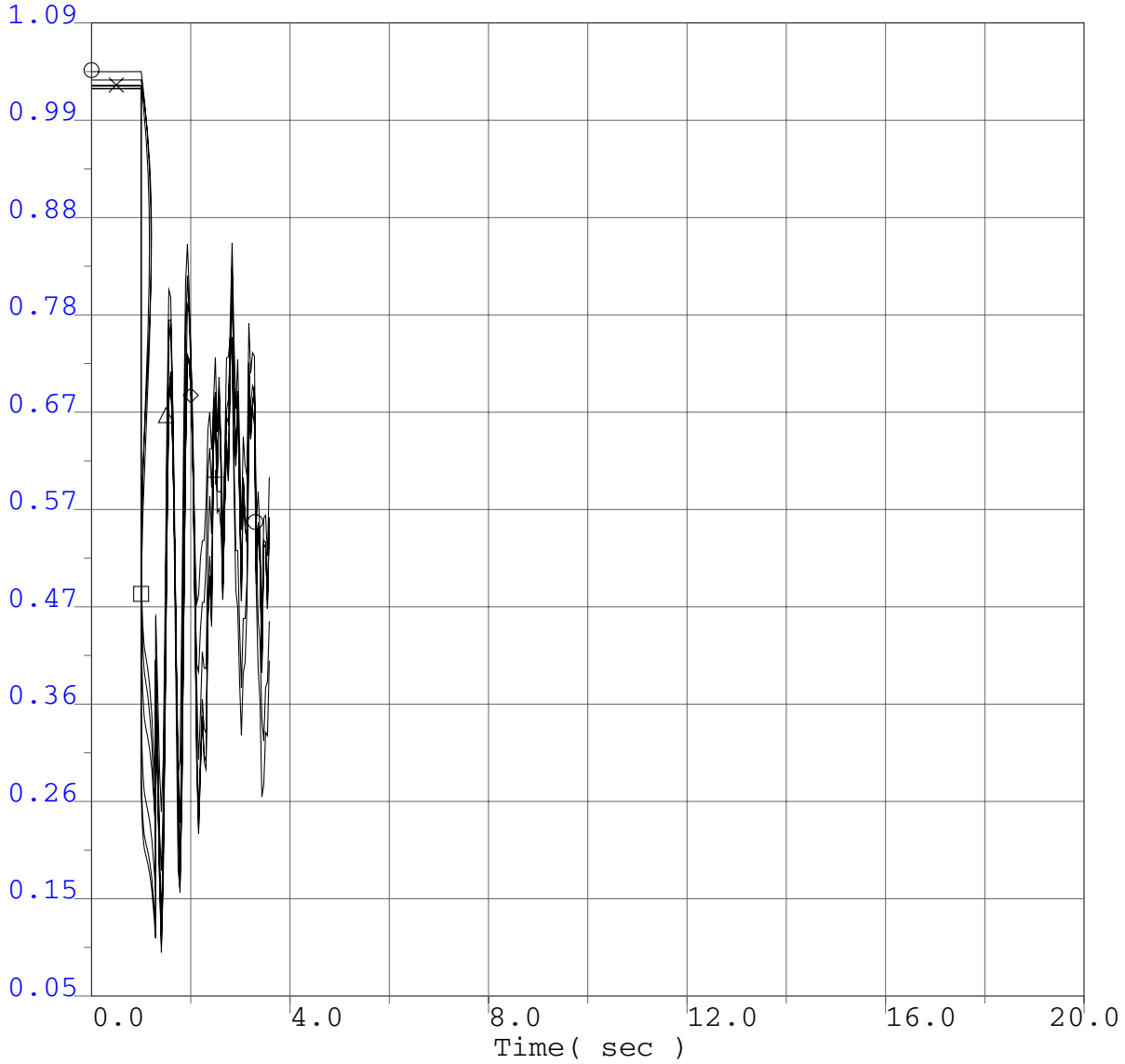

P0411 Project System Impact Study
2008 Summer Peak Base Case
P0411 @ 166.4MW
Humboldt 115kV Bus outage
3 ph 17.4 cyc flt @ Humboldt 115kV bus & clr Humboldt 115kV bus

P0411 Project System Impact Study

Selected PG&E Bus Frequency Plots Adjacent to Fault

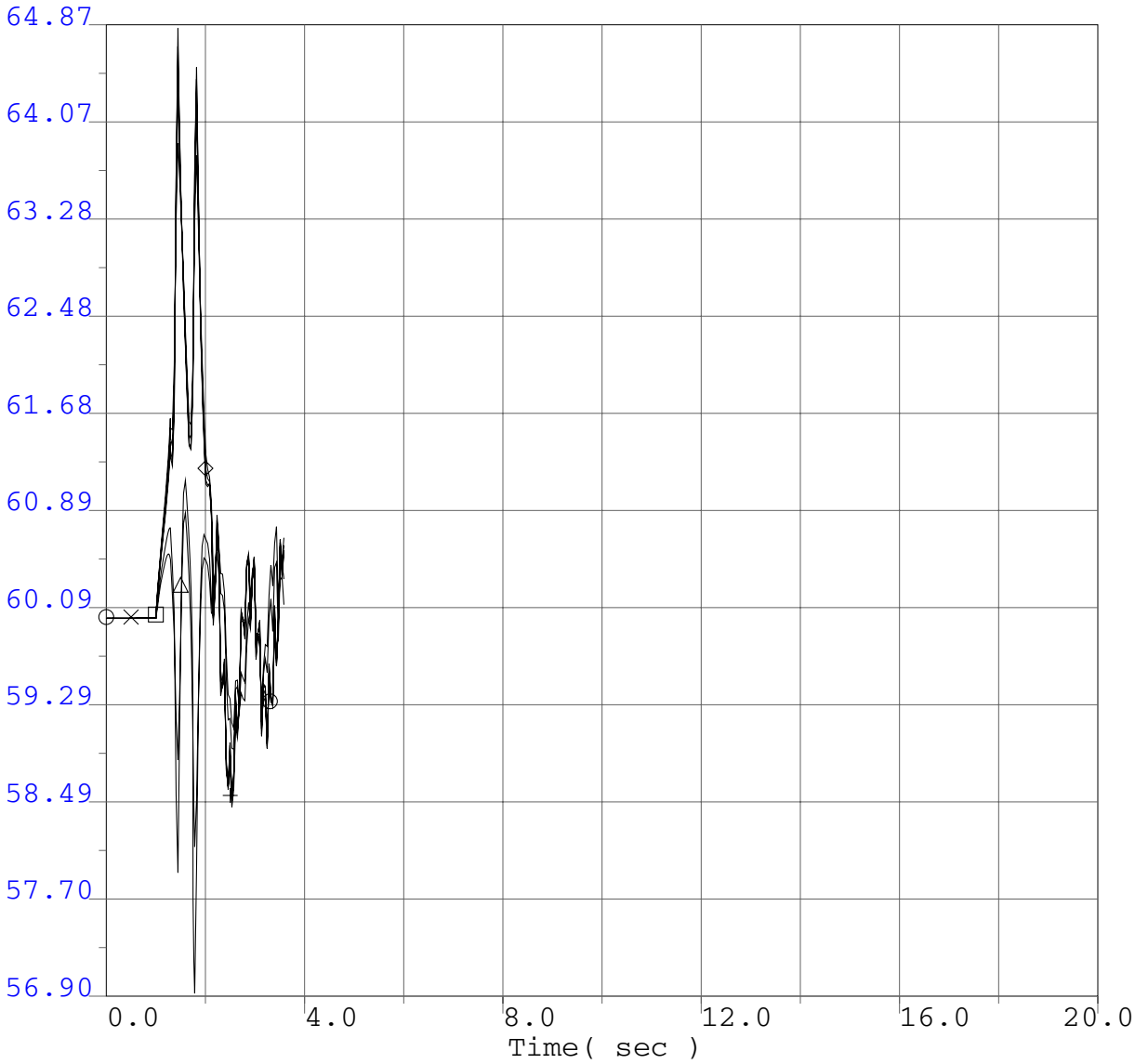

○	56.9	fbul	31090	HMBLT BY	60.0	"*"	1	64.87
×	56.9	fbus	31080	HUMBOLDT	60.0	"*"	1	64.87
□	56.9	fbul	31102	NEWBURG	60.0	"*"	1	64.87
△	56.9	fbus	31105	RIODLLTP	60.0	"*"	1	64.87
◇	56.9	fbul	31086	EUREKA	60.0	"*"	1	64.87
+	56.9	fbul	31082	HARRIS	60.0	"*"	1	64.87

P0411 Project System Impact Study
2008 Summer Peak Base Case
P0411 @ 166.4MW
Humboldt 115kV Bus outage
3 ph 17.4 cyc flt @ Humboldt 115kV bus & clr Humboldt 115kV bus

P0411 Project System Impact Study

Project Generator Terminal Voltages

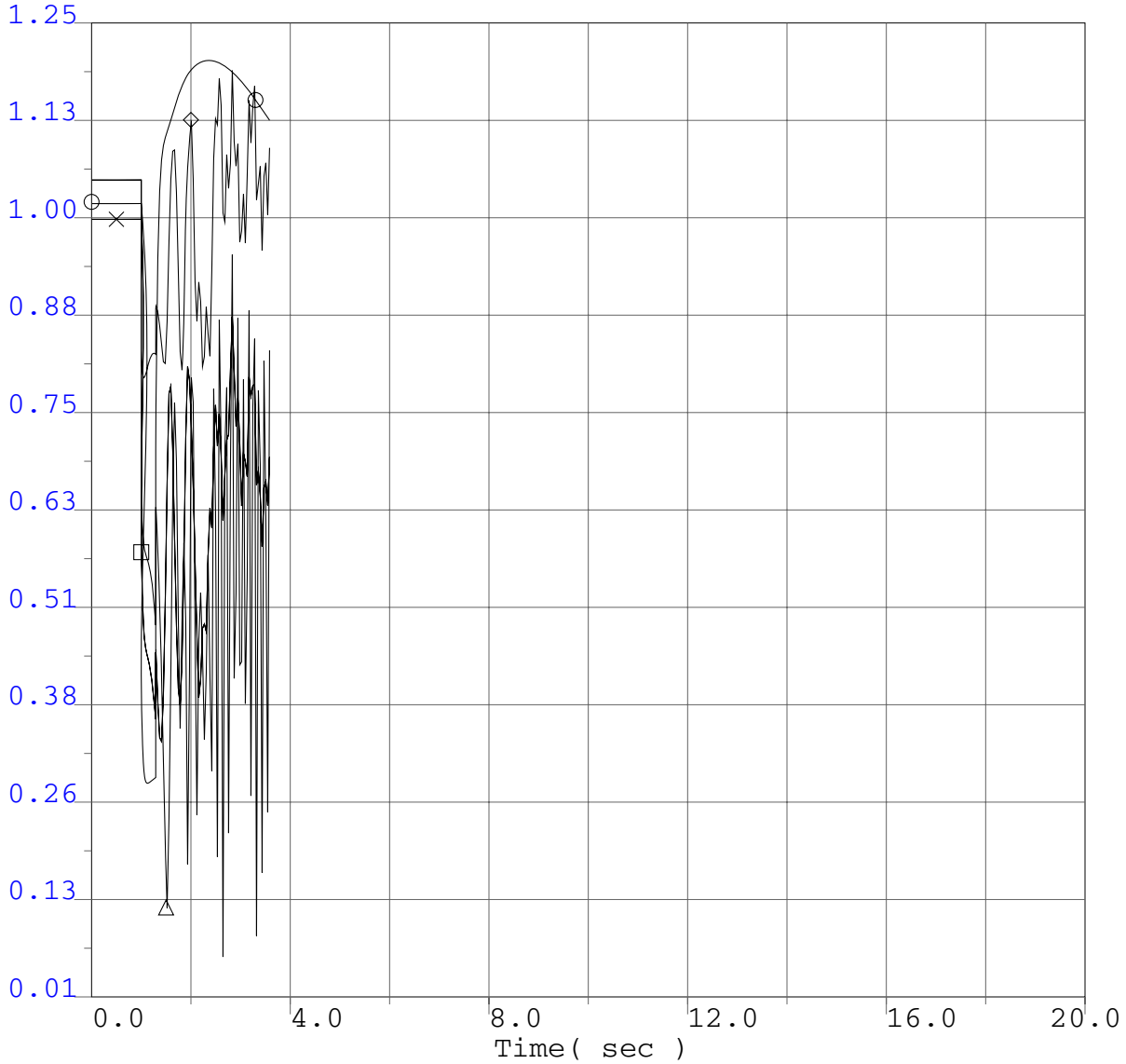

○ 0.01	vt	31180	P0411G1	13.8	"1"	1	1.25
× 0.01	vt	31181	P0411G2	13.8	"5"	1	1.25
□ 0.01	vt	31182	P0411G3	13.8	"8"	1	1.25
△ 0.01	vt	31150	FAIRHAVN	13.8	"1"	1	1.25
◇ 0.01	vt	31158	LP SAMOA	12.5	"1"	1	1.25

P0411 Project System Impact Study
2008 Summer Peak Base Case
P0411 @ 166.4MW
Humboldt 115kV Bus outage
3 ph 17.4 cyc flt @ Humboldt 115kV bus & clr Humboldt 115kV bus

P0411 Project System Impact Study

Project Generator Rotor Speed

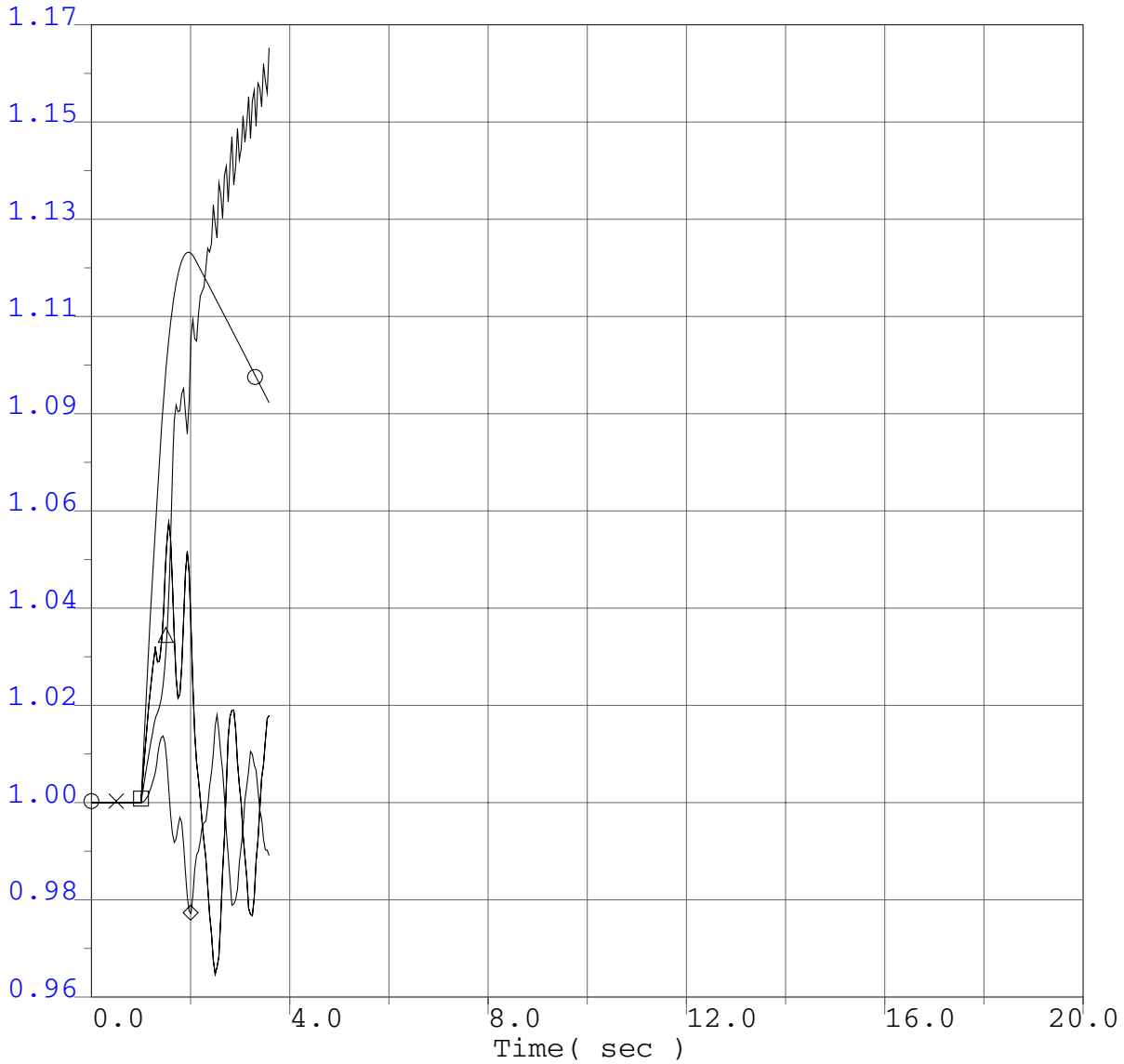

○	0.9575	spd	31180	P0411G1	13.8	"1" 1	1.1702
×	0.9575	spd	31181	P0411G2	13.8	"5" 1	1.1702
□	0.9575	spd	31182	P0411G3	13.8	"8" 1	1.1702
△	0.9575	spd	31150	FAIRHAVN	13.8	"1" 1	1.1702
◇	0.9575	spd	31158	LP SAMOA	12.5	"1" 1	1.1702

P0411 Project System Impact Study
2008 Summer Peak Base Case
P0411 @ 166.4MW
Humboldt 115kV Bus outage
3 ph 17.4 cyc flt @ Humboldt 115kV bus & clr Humboldt 115kV bus

P0411 Project System Impact Study

Project Generator Terminal Power

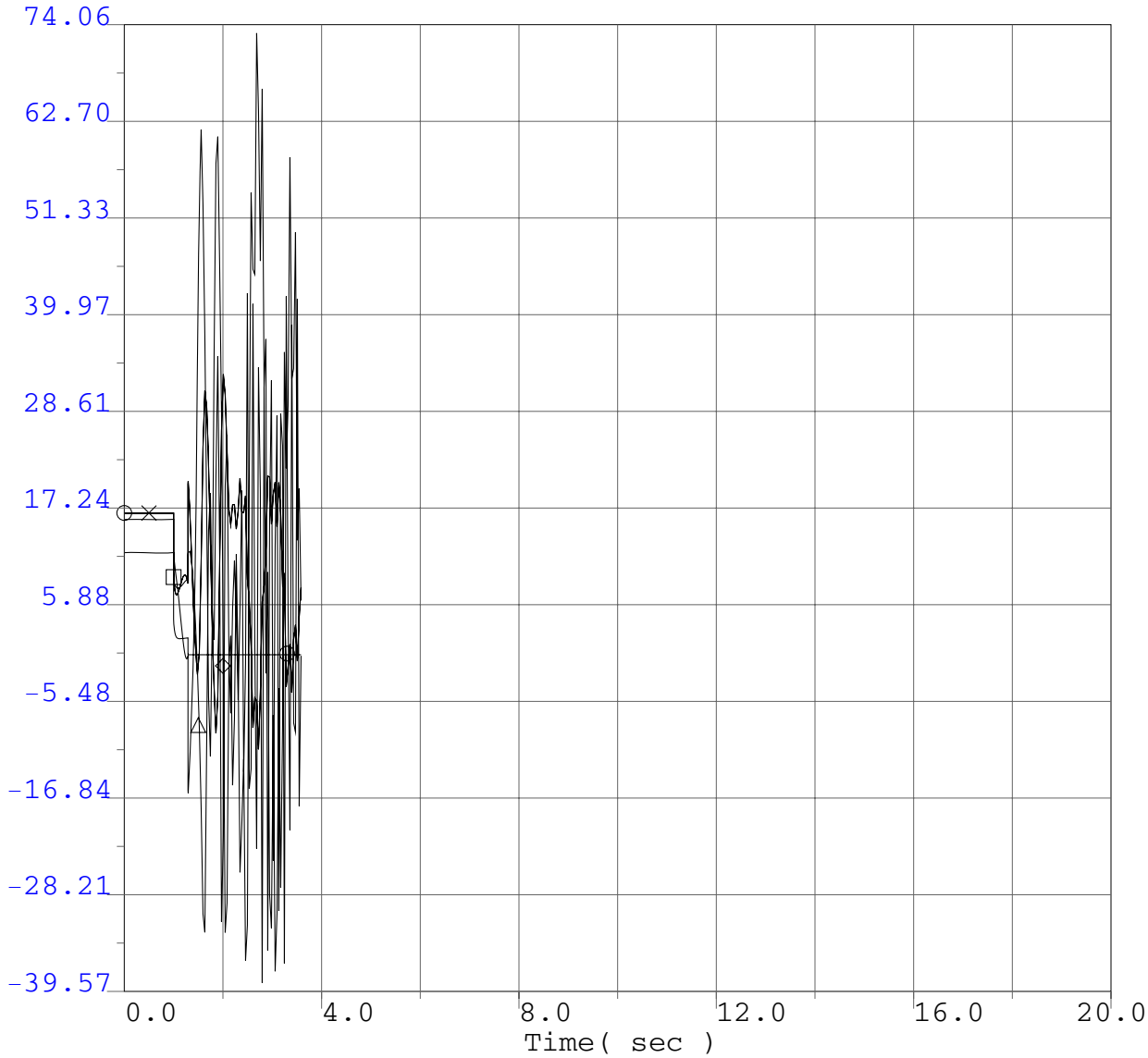

○	-39.57	pg	31180	P0411G1	13.8	"1" 1	74.06
×	-39.57	pg	31181	P0411G2	13.8	"5" 1	74.06
□	-39.57	pg	31182	P0411G3	13.8	"8" 1	74.06
△	-39.57	pg	31150	FAIRHAVN	13.8	"1" 1	74.06
◇	-39.57	pg	31158	LP SAMOA	12.5	"1" 1	74.06

P0411 Project System Impact Study
2008 Summer Peak Base Case
P0411 @ 166.4MW
Humboldt 115kV Bus outage
3 ph 17.4 cyc flt @ Humboldt 115kV bus & clr Humboldt 115kV bus

P0411 Project System Impact Study

Project Generator Terminal Reactive Power

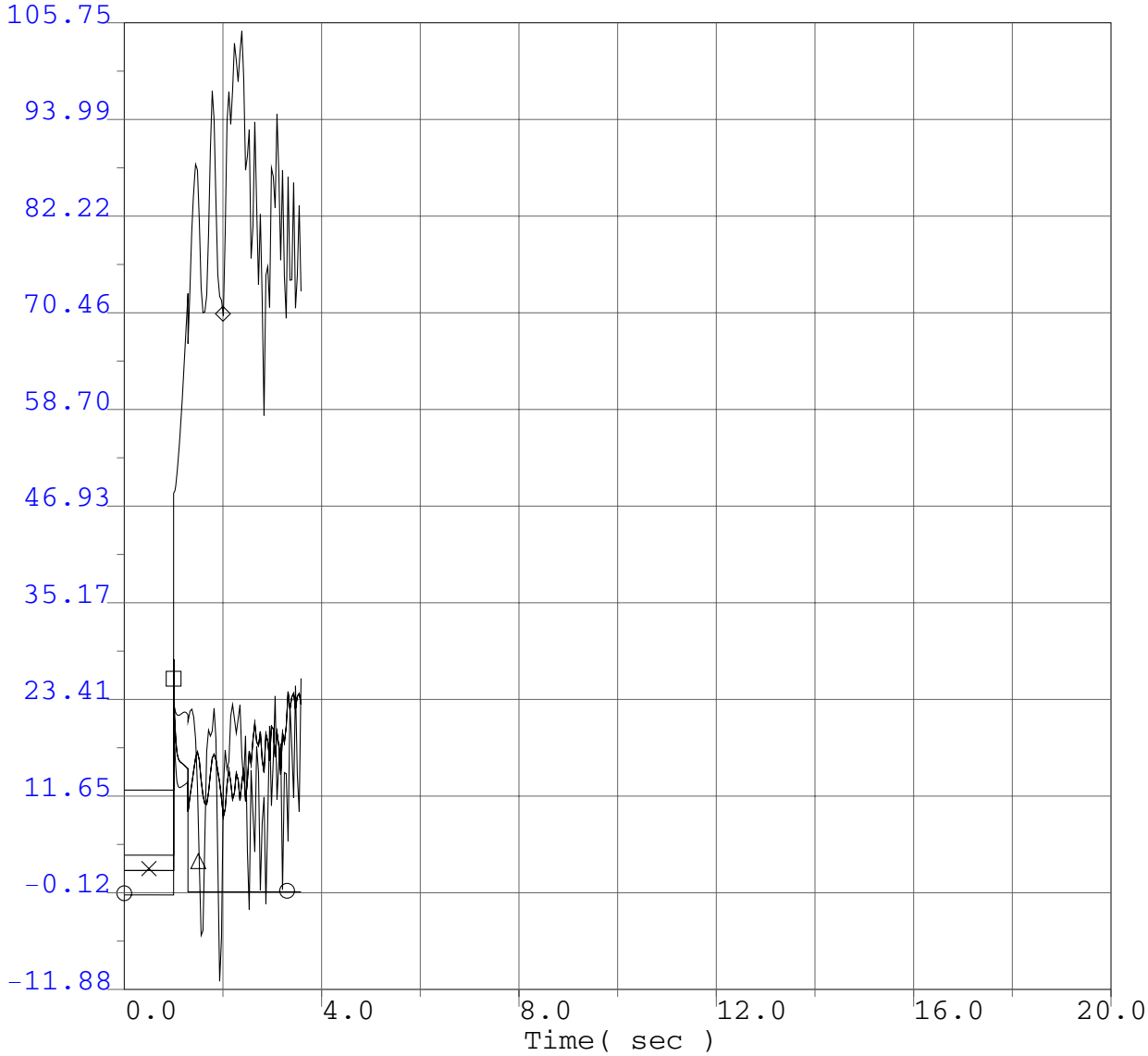

○	-11.88	qg	31180	P0411G1	13.8	"1"	1	105.75
×	-11.88	qg	31181	P0411G2	13.8	"5"	1	105.75
□	-11.88	qg	31182	P0411G3	13.8	"8"	1	105.75
△	-11.88	qg	31150	FAIRHAVN	13.8	"1"	1	105.75
◇	-11.88	qg	31158	LP SAMOA	12.5	"1"	1	105.75

P0411 Project System Impact Study
2008 Summer Peak Base Case
P0411 @ 166.4MW
Humboldt 115kV Bus outage
3 ph 17.4 cyc flt @ Humboldt 115kV bus & clr Humboldt 115kV bus

P0411 Project System Impact Study

Selected WECC Bus Voltage Plots

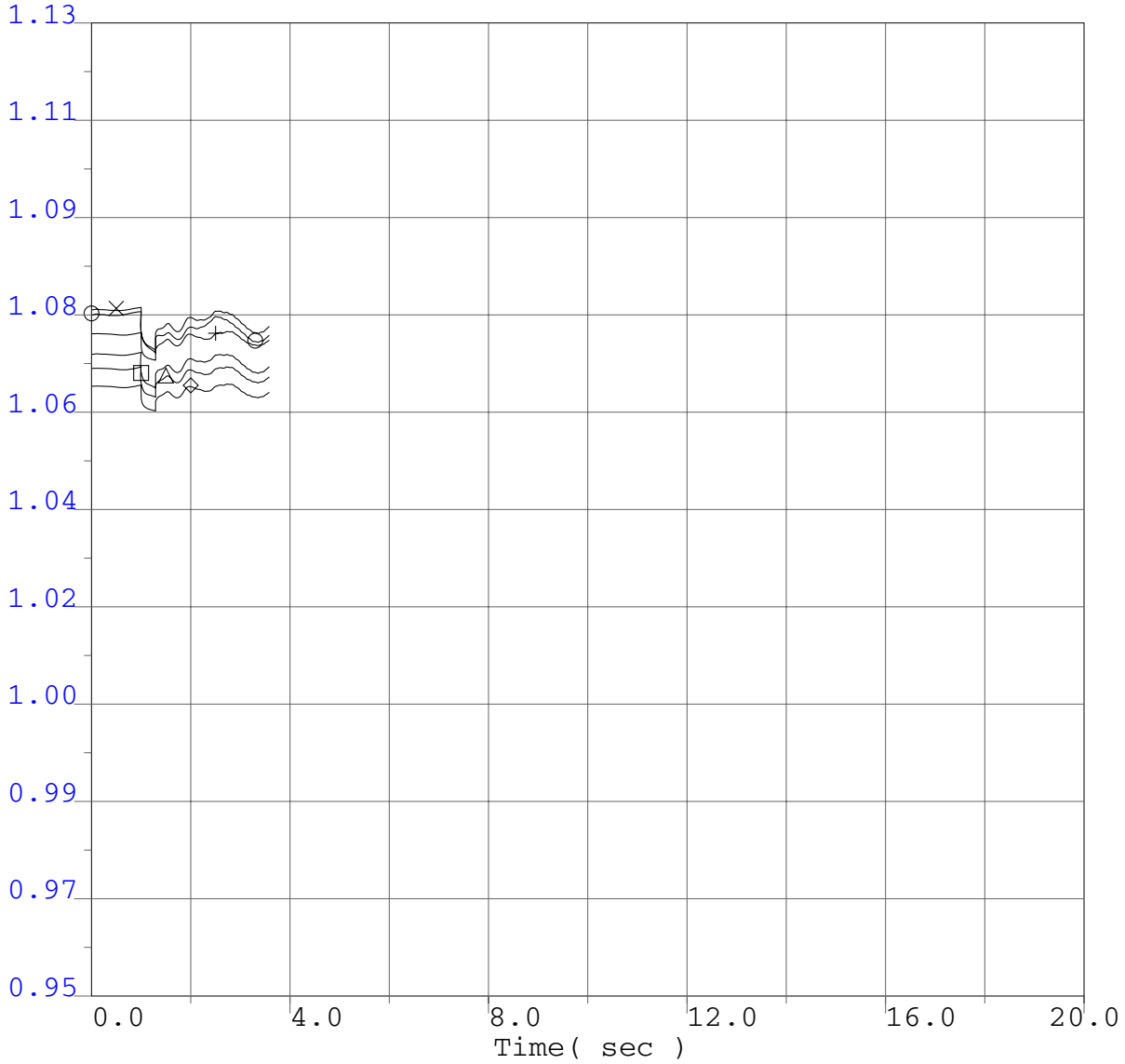

○	0.95	vbus	40687	MALIN	500.0	"*"	1	1.13
×	0.95	vbus	30005	ROUND MT	500.0	"*"	1	1.13
□	0.95	vbus	30015	TABLE MT	500.0	"*"	1	1.13
△	0.95	vbus	30030	VACA-DIX	500.0	"*"	1	1.13
◇	0.95	vbus	30040	TESLA	500.0	"*"	1	1.13
+	0.95	vbus	30035	TRACY	500.0	"*"	1	1.13

P0411 Project System Impact Study
2008 Summer Peak Base Case
P0411 @ 166.4MW
Humboldt 115kV Bus outage
3 ph 17.4 cyc flt @ Humboldt 115kV bus & clr Humboldt 115kV bus

P0411 Project System Impact Study

Selected WECC Bus Voltage Plots

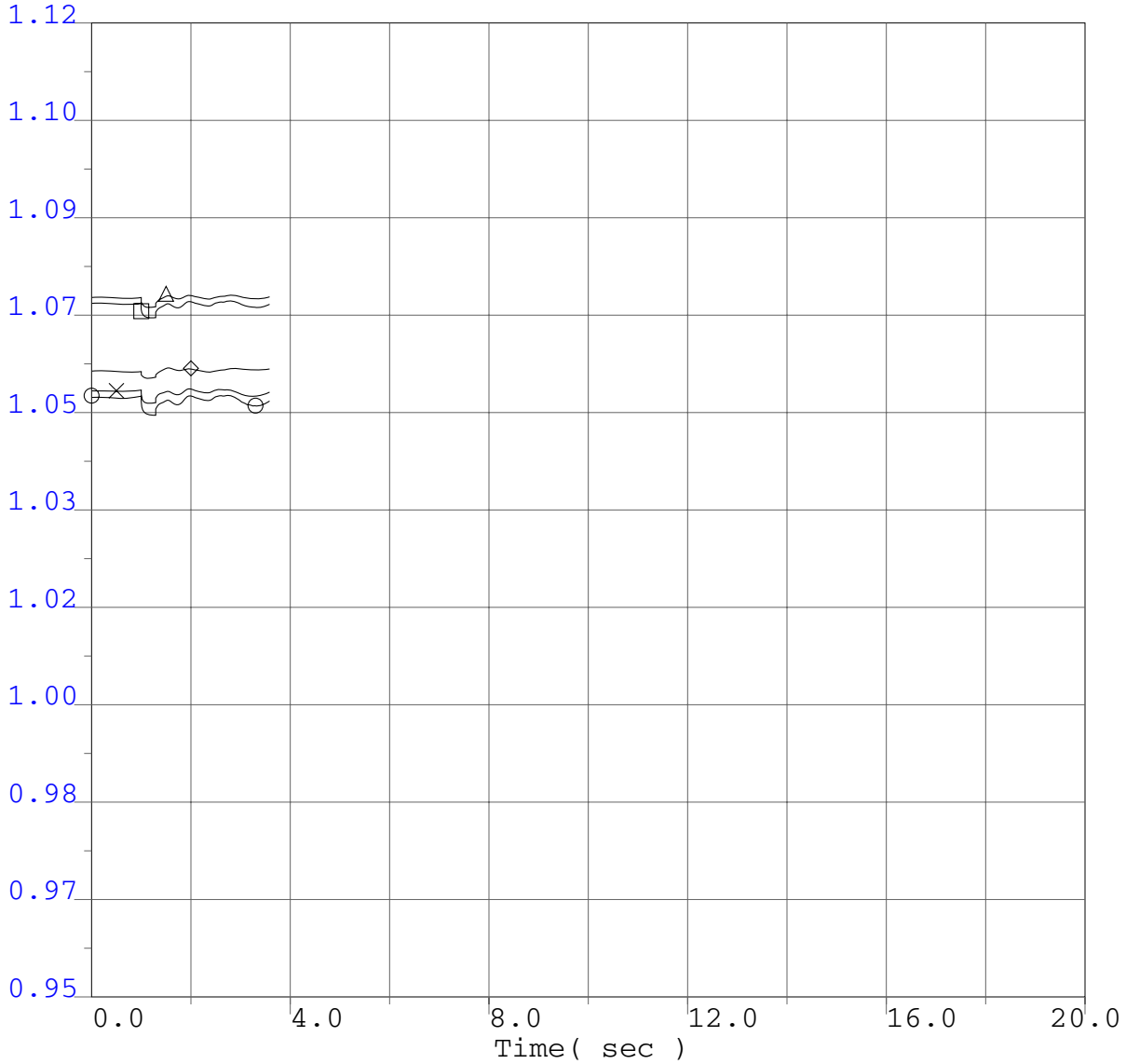

○ 0.95	vbus	30042	METCALF	500.0	"*"	1	1.12
× 0.95	vbus	30045	MOSSLAND	500.0	"*"	1	1.12
□ 0.95	vbus	30050	LOSBANOS	500.0	"*"	1	1.12
△ 0.95	vbus	30055	GATES	500.0	"*"	1	1.12
◇ 0.95	vbus	30060	MIDWAY	500.0	"*"	1	1.12

P0411 Project System Impact Study
2008 Summer Peak Base Case
P0411 @ 166.4MW
Humboldt 115kV Bus outage
3 ph 17.4 cyc flt @ Humboldt 115kV bus & clr Humboldt 115kV bus

P0411 Project System Impact Study

Selected WECC Bus Voltage Plots

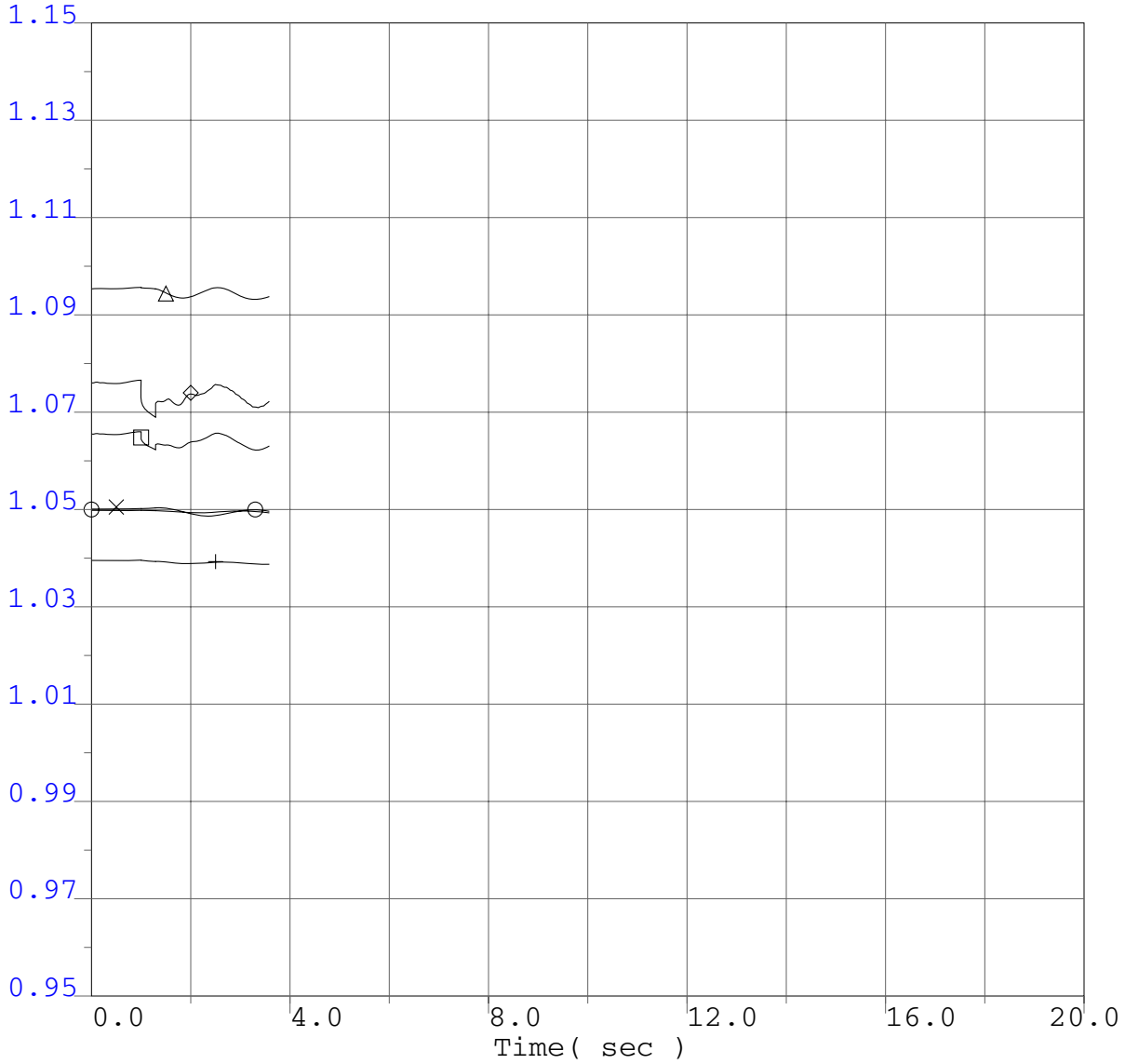

○ 0.95	vbus	14001	FOURCORN	500.0	"*" 1	1.15
× 0.95	vbus	50703	NIC500	500.0	"*" 1	1.15
□ 0.95	vbus	60240	MIDPOINT	500.0	"*" 1	1.15
△ 0.95	vbus	62012	TOWN2	500.0	"*" 1	1.15
◇ 0.95	vbus	40687	MALIN	500.0	"*" 1	1.15
+ 0.95	vbus	66340	SIGURD	345.0	"*" 1	1.15

P0411 Project System Impact Study
2008 Summer Peak Base Case
P0411 @ 166.4MW
Humboldt 115kV Bus outage
3 ph 17.4 cyc flt @ Humboldt 115kV bus & clr Humboldt 115kV bus

P0411 Project System Impact Study

Selected WECC Bus Voltage Plots

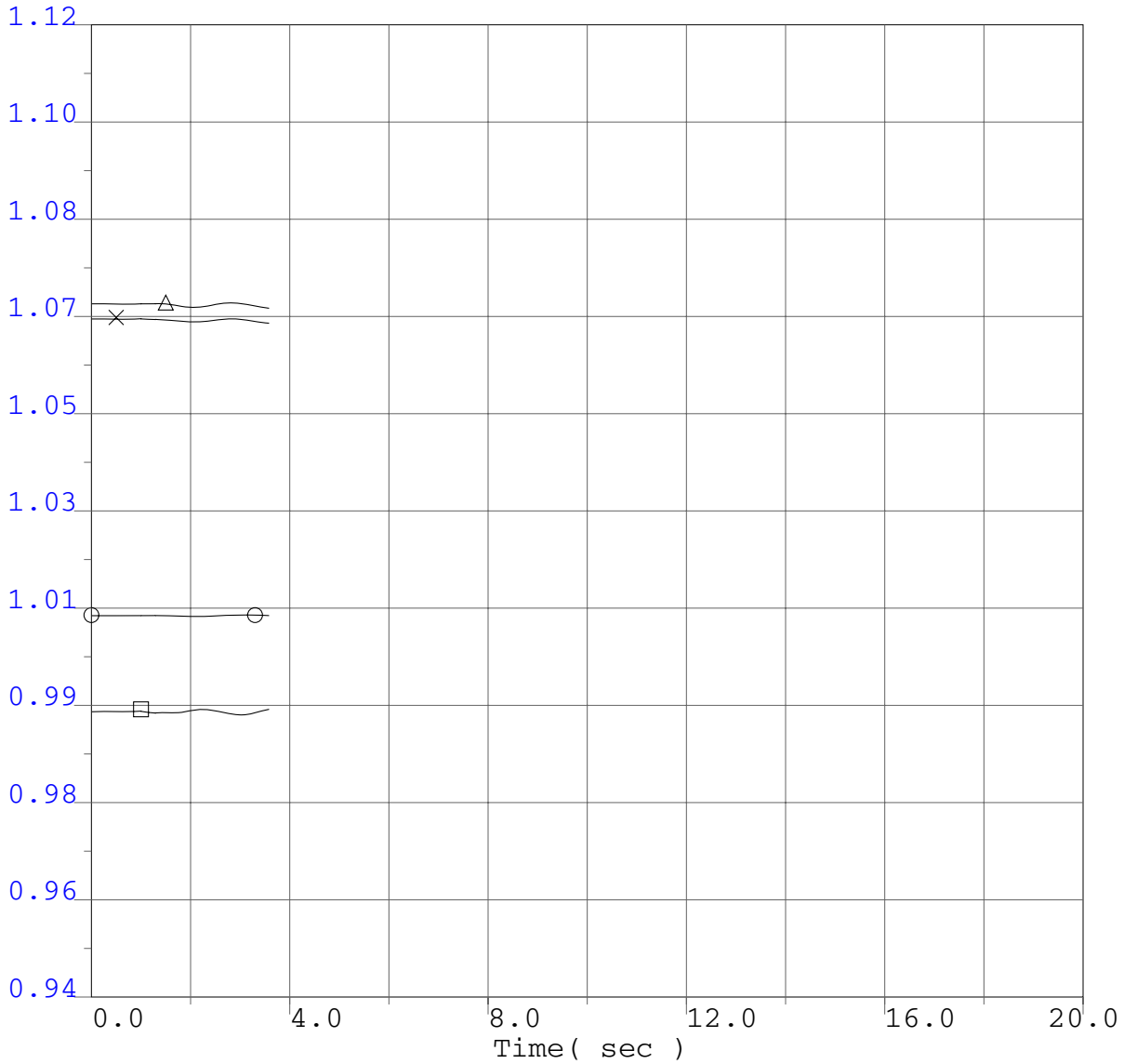

○ 0.94	vbus	54150	LANGDON2	500.0	"*"	1	1.12
× 0.94	vbus	14003	NAVAJO	500.0	"*"	1	1.12
□ 0.94	vbus	24153	VESTAL	230.0	"*"	1	1.12
△ 0.94	vbus	22360	IMPRLVLY	500.0	"*"	1	1.12

P0411 Project System Impact Study
2008 Summer Peak Base Case
P0411 @ 166.4MW
Humboldt 115kV Bus outage
3 ph 17.4 cyc flt @ Humboldt 115kV bus & clr Humboldt 115kV bus

P0411 Project System Impact Study

Selected WECC Bus Frequency Plots

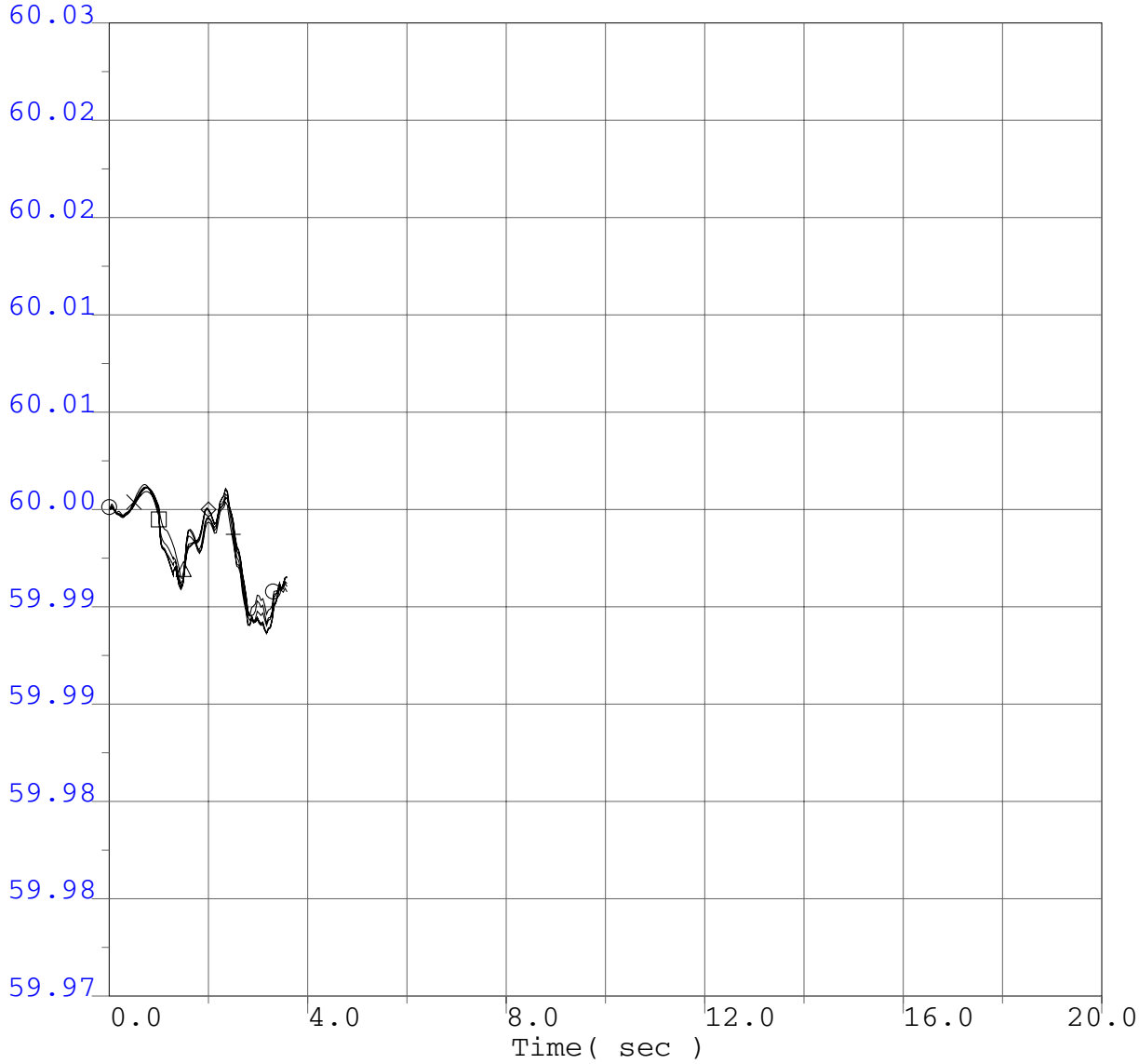

○	59.97	fbus	40687	MALIN	500.0	"*"	1	60.03
×	59.97	fbus	30005	ROUND MT	500.0	"*"	1	60.03
□	59.97	fbus	30015	TABLE MT	500.0	"*"	1	60.03
△	59.97	fbus	30030	VACA-DIX	500.0	"*"	1	60.03
◇	59.97	fbus	30040	TESLA	500.0	"*"	1	60.03
+	59.97	fbus	30035	TRACY	500.0	"*"	1	60.03

P0411 Project System Impact Study
2008 Summer Peak Base Case
P0411 @ 166.4MW
Humboldt 115kV Bus outage
3 ph 17.4 cyc flt @ Humboldt 115kV bus & clr Humboldt 115kV bus

P0411 Project System Impact Study

Selected WECC Bus Frequency Plots

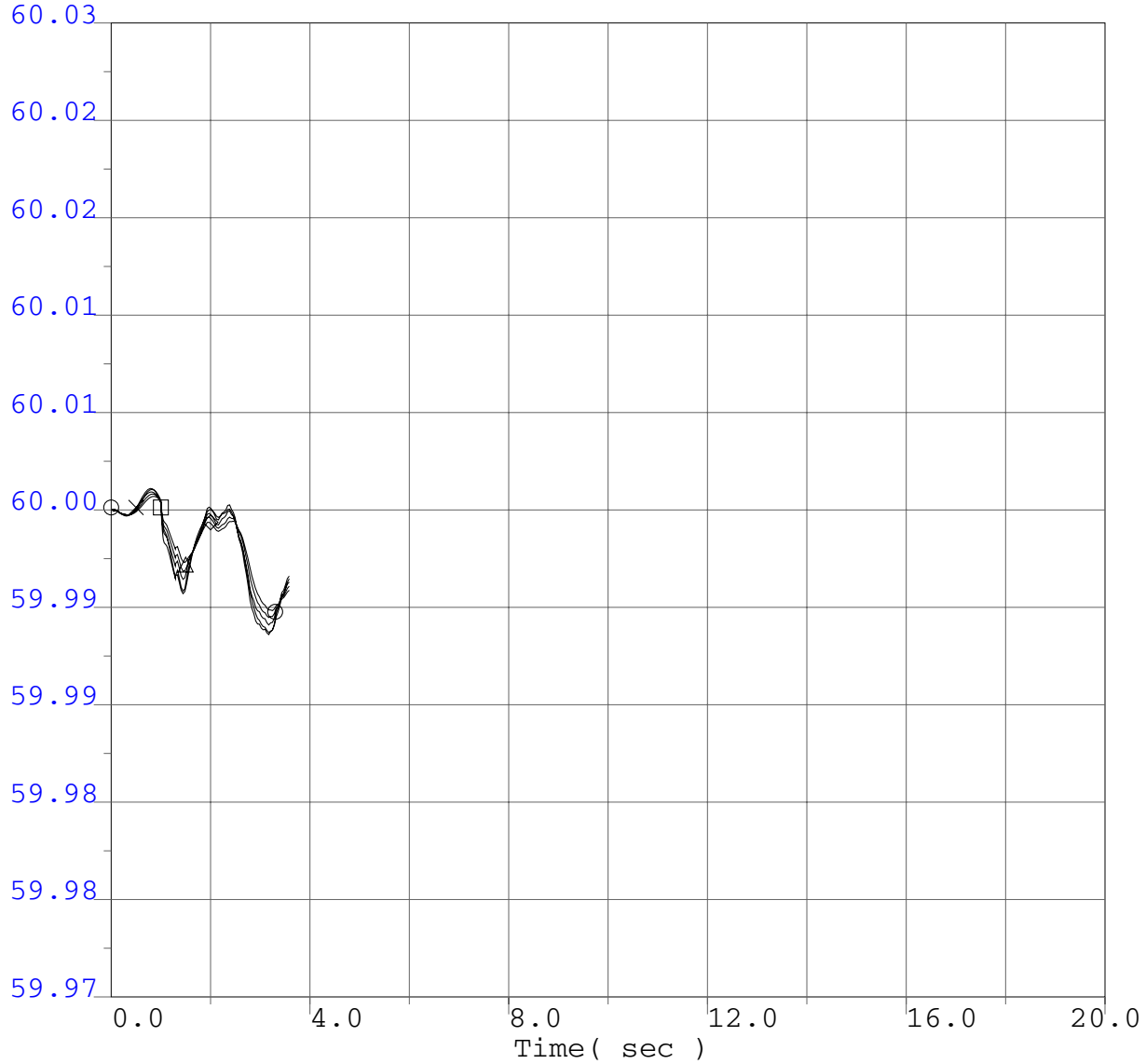

○ 59.97	fbus	30042	METCALF	500.0	"*"	1	60.03
× 59.97	fbus	30045	MOSSLAND	500.0	"*"	1	60.03
□ 59.97	fbus	30050	LOSBANOS	500.0	"*"	1	60.03
△ 59.97	fbus	30055	GATES	500.0	"*"	1	60.03
◇ 59.97	fbus	30060	MIDWAY	500.0	"*"	1	60.03

P0411 Project System Impact Study
2008 Summer Peak Base Case
P0411 @ 166.4MW
Humboldt 115kV Bus outage
3 ph 17.4 cyc flt @ Humboldt 115kV bus & clr Humboldt 115kV bus

P0411 Project System Impact Study

Selected WECC Bus Frequency Plots

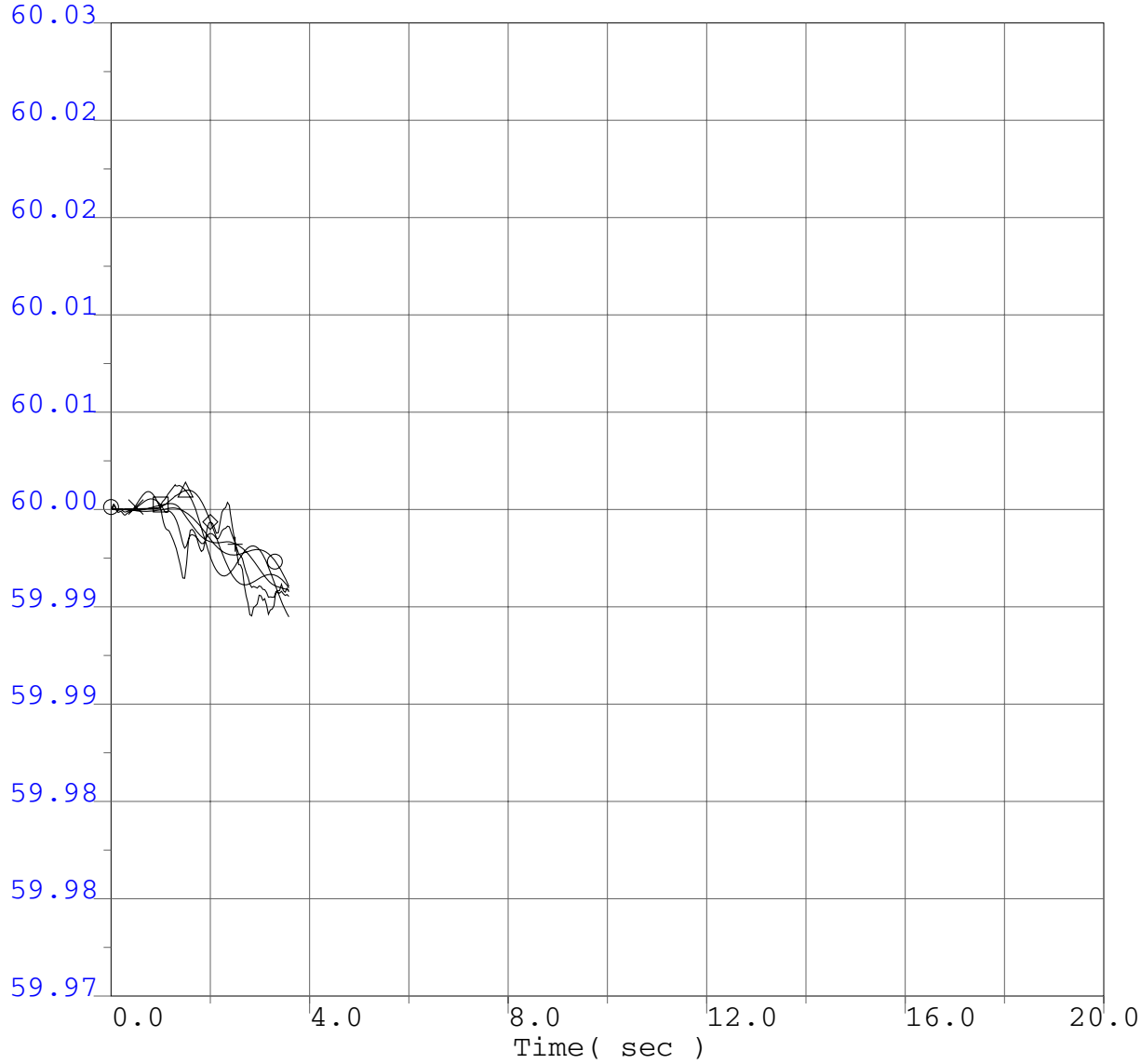

○ 59.97	fbus	14001	FOURCORN	500.0	"*"	1	60.03
× 59.97	fbus	50703	NIC500	500.0	"*"	1	60.03
□ 59.97	fbus	60240	MIDPOINT	500.0	"*"	1	60.03
△ 59.97	fbus	62012	TOWN2	500.0	"*"	1	60.03
◇ 59.97	fbus	40687	MALIN	500.0	"*"	1	60.03
+ 59.97	fbus	66340	SIGURD	345.0	"*"	1	60.03

P0411 Project System Impact Study
2008 Summer Peak Base Case
P0411 @ 166.4MW
Humboldt 115kV Bus outage
3 ph 17.4 cyc flt @ Humboldt 115kV bus & clr Humboldt 115kV bus

P0411 Project System Impact Study

Selected WECC Bus Frequency Plots

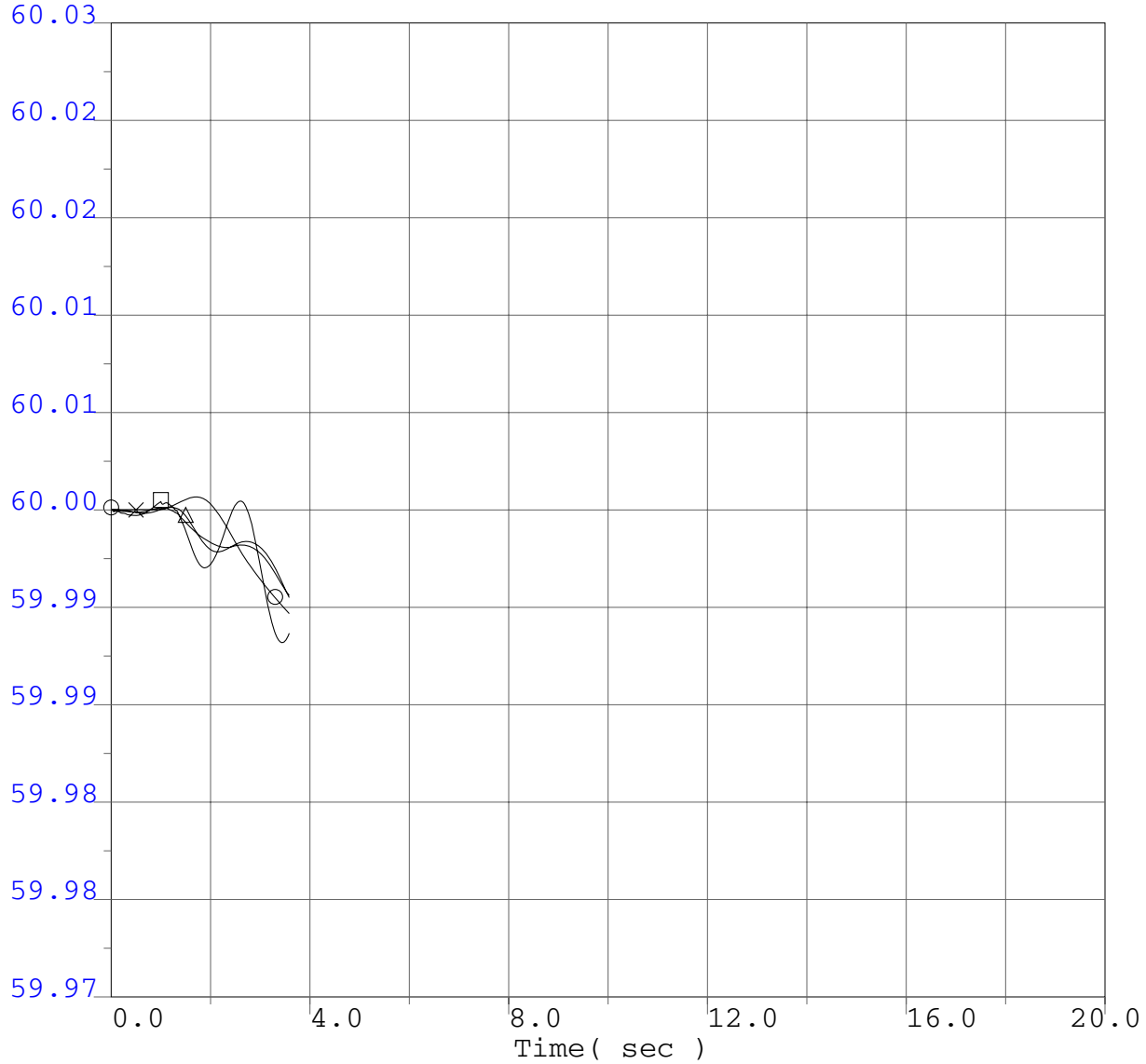

○ 59.97	fbus	54150	LANGDON2	500.0	"*"	1	60.03
× 59.97	fbus	14003	NAVAJO	500.0	"*"	1	60.03
□ 59.97	fbus	24153	VESTAL	230.0	"*"	1	60.03
△ 59.97	fbus	22360	IMPRLVLY	500.0	"*"	1	60.03

P0411 Project System Impact Study
2008 Summer Peak Base Case
P0411 @ 166.4MW
Humboldt 115kV Bus outage
3 ph 17.4 cyc flt @ Humboldt 115kV bus & clr Humboldt 115kV bus

P0411 Project System Impact Study

WECC Generator Rotor Angle

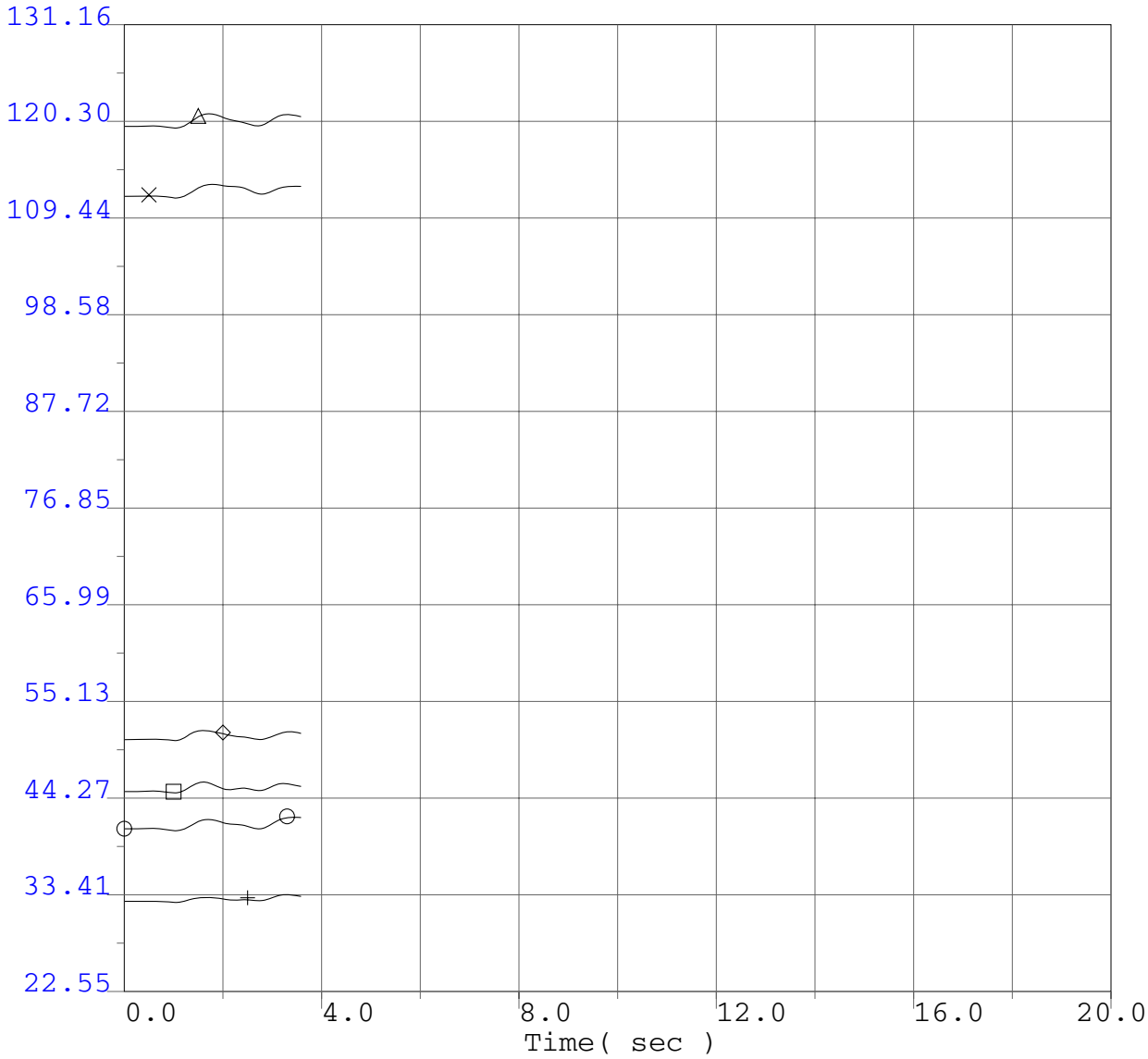

○	22.55	ang	14914	FCNGN4CC	22.0	"H" 1	131.16
×	22.55	ang	50500	GMS G6	13.8	"1" 1	131.16
□	22.55	ang	60100	BRWNL 5	13.8	"1" 1	131.16
△	22.55	ang	62048	COLSTP 3	26.0	"1" 1	131.16
◇	22.55	ang	41701	JONDAY01	13.8	"1" 1	131.16
+	22.55	ang	36411	DIABLO 1	25.0	"1" 1	131.16

P0411 Project System Impact Study
2008 Summer Peak Base Case
P0411 @ 166.4MW
Humboldt 115kV Bus outage
3 ph 17.4 cyc flt @ Humboldt 115kV bus & clr Humboldt 115kV bus

P0411 Project System Impact Study

WECC Generator Rotor Angle

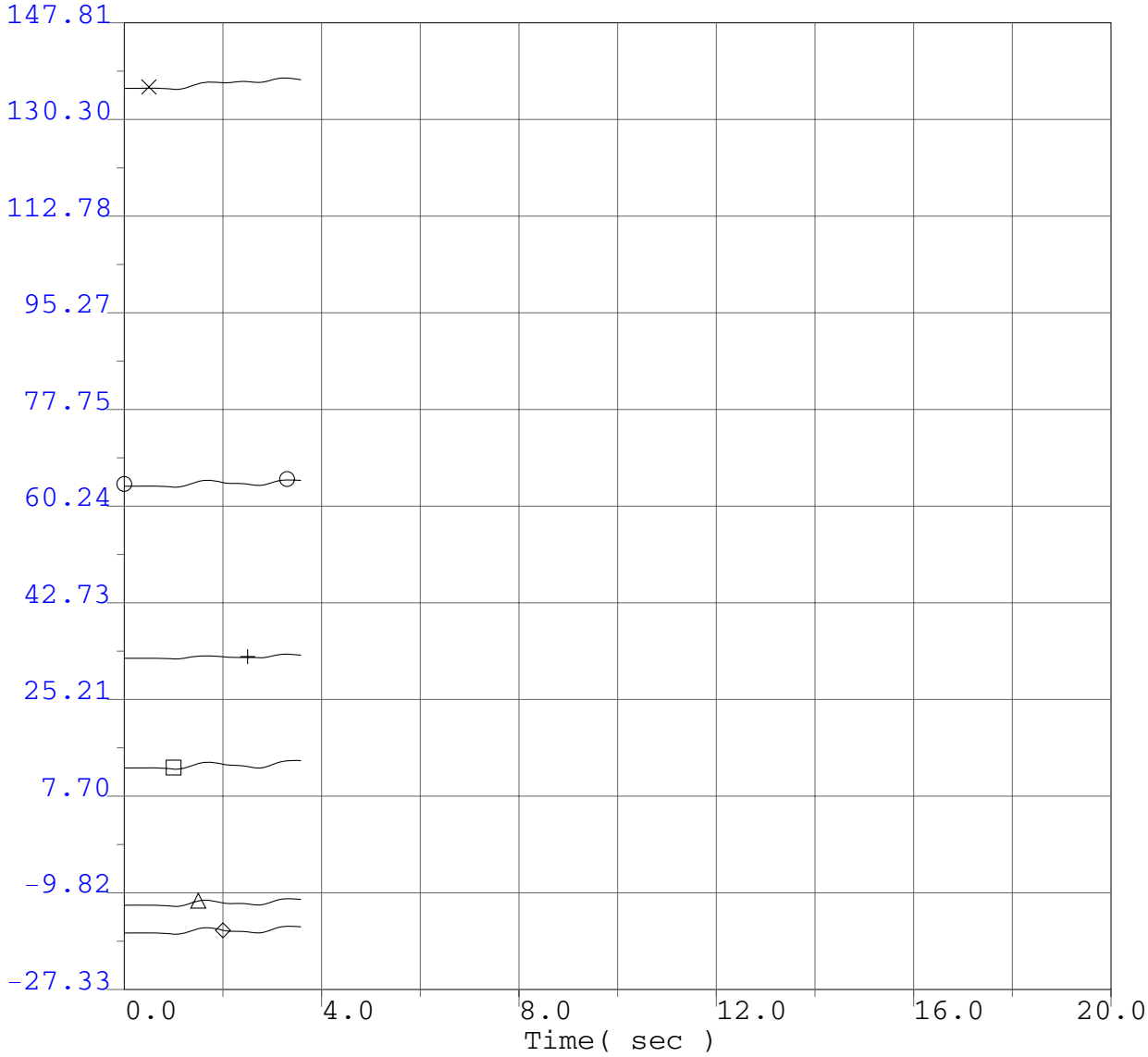

○	-27.33	ang	65490	EHUNTR 1	24.0	"1" 1	147.81
×	-27.33	ang	54280	SUND#2GN	18.0	"2" 1	147.81
□	-27.33	ang	79151	GLENC3-4	13.8	"3" 1	147.81
△	-27.33	ang	24130	S.ONOFR3	22.0	"3" 1	147.81
◇	-27.33	ang	22244	ENCINA 5	24.0	"1" 1	147.81
+	-27.33	ang	36411	DIABLO 1	25.0	"1" 1	147.81

P0411 Project System Impact Study
2008 Summer Peak Base Case
P0411 @ 166.4MW
Humboldt 115kV Bus outage
3 ph 17.4 cyc flt @ Humboldt 115kV bus & clr Humboldt 115kV bus

P0411 Project System Impact Study

Selected PG&E Transmission Line Flows (MW)

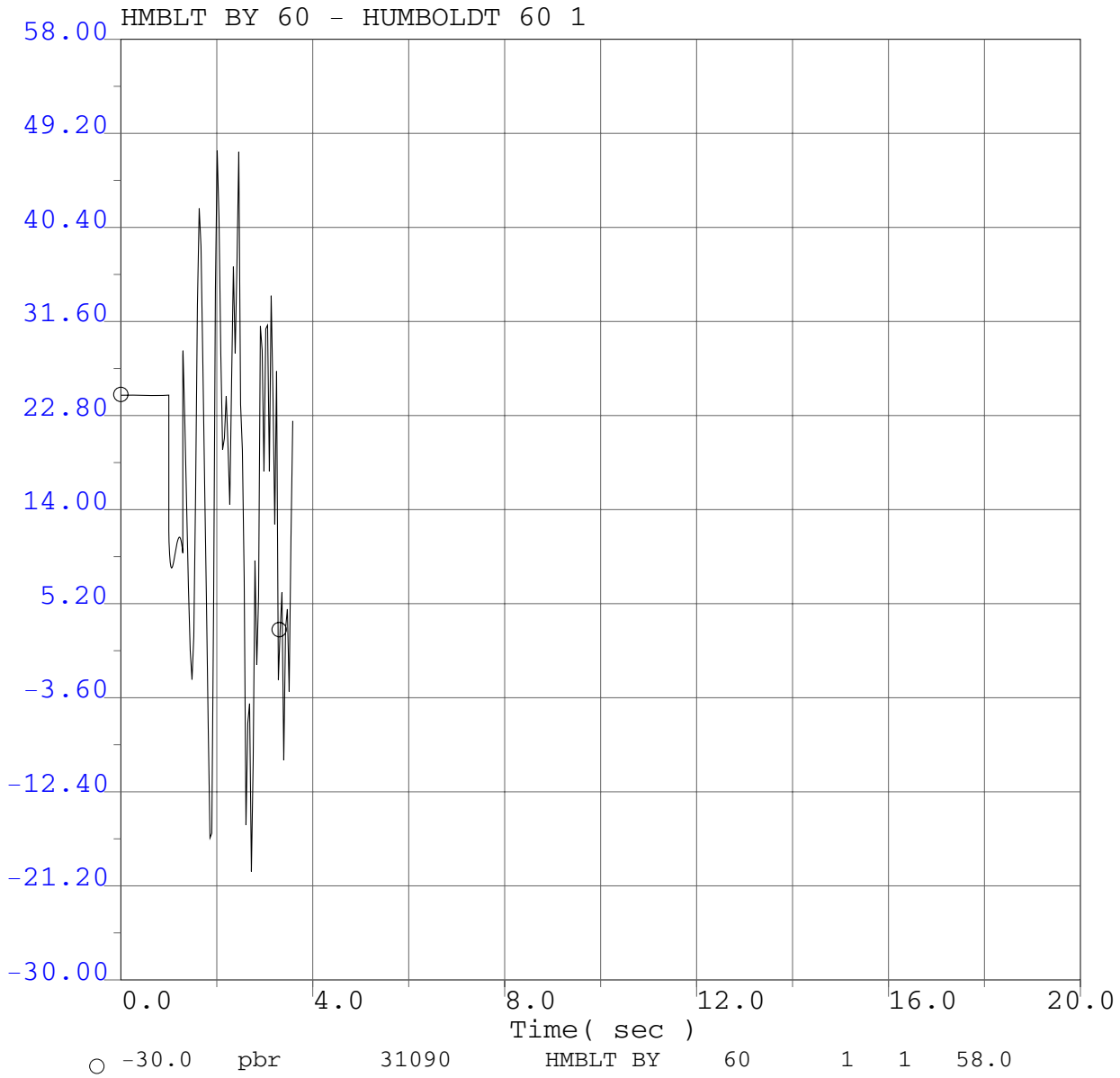

P0411 Project System Impact Study
2008 Summer Peak Base Case
P0411 @ 166.4MW
Humboldt 115kV Bus outage
3 ph 17.4 cyc flt @ Humboldt 115kV bus & clr Humboldt 115kV bus

P0411 Project System Impact Study

Selected PG&E Transmission Line Flows (MW)

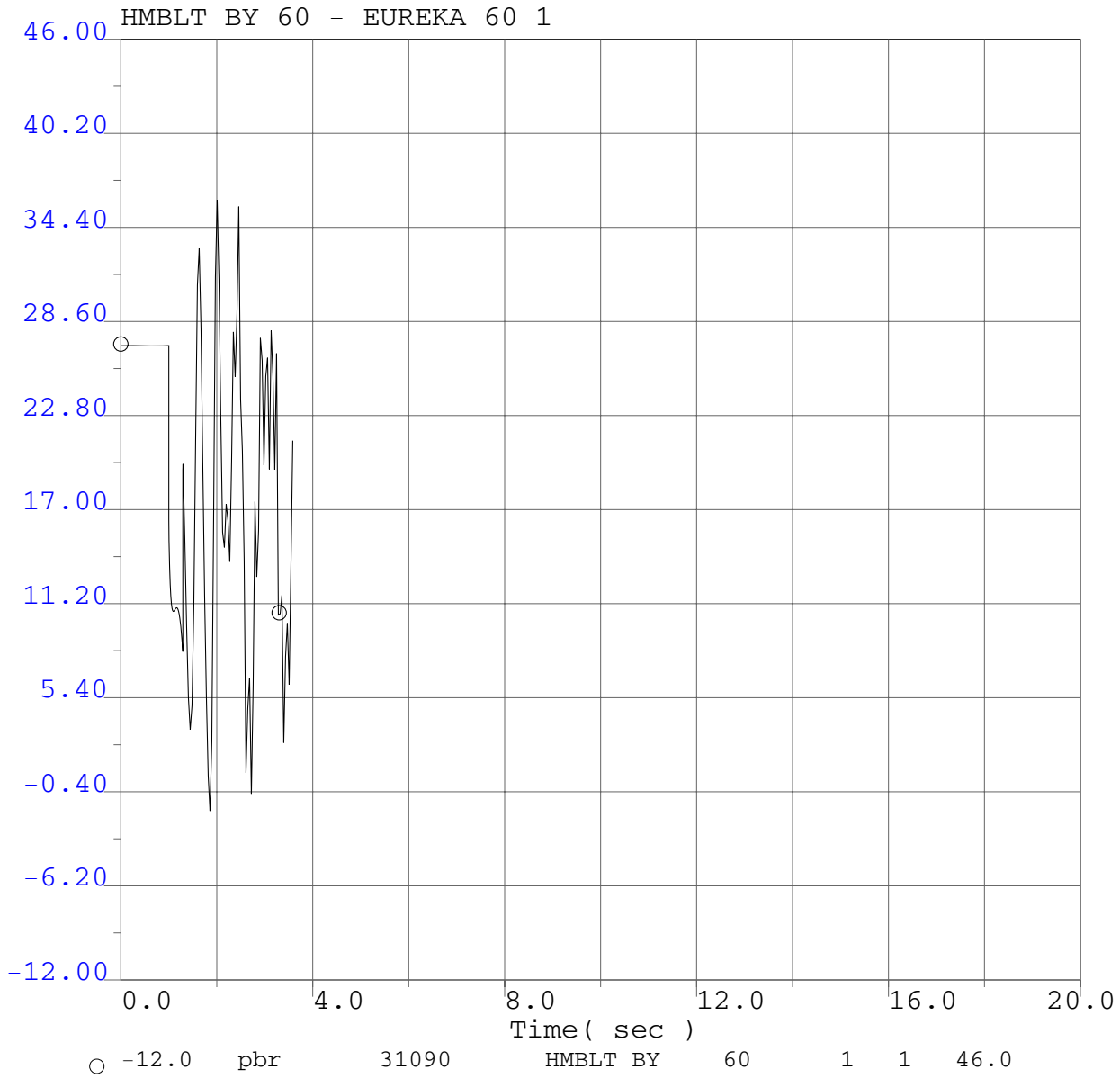

P0411 Project System Impact Study
2008 Summer Peak Base Case
P0411 @ 166.4MW
Humboldt 115kV Bus outage
3 ph 17.4 cyc flt @ Humboldt 115kV bus & clr Humboldt 115kV bus

P0411 Project System Impact Study

Selected PG&E Transmission Line Flows (MW)

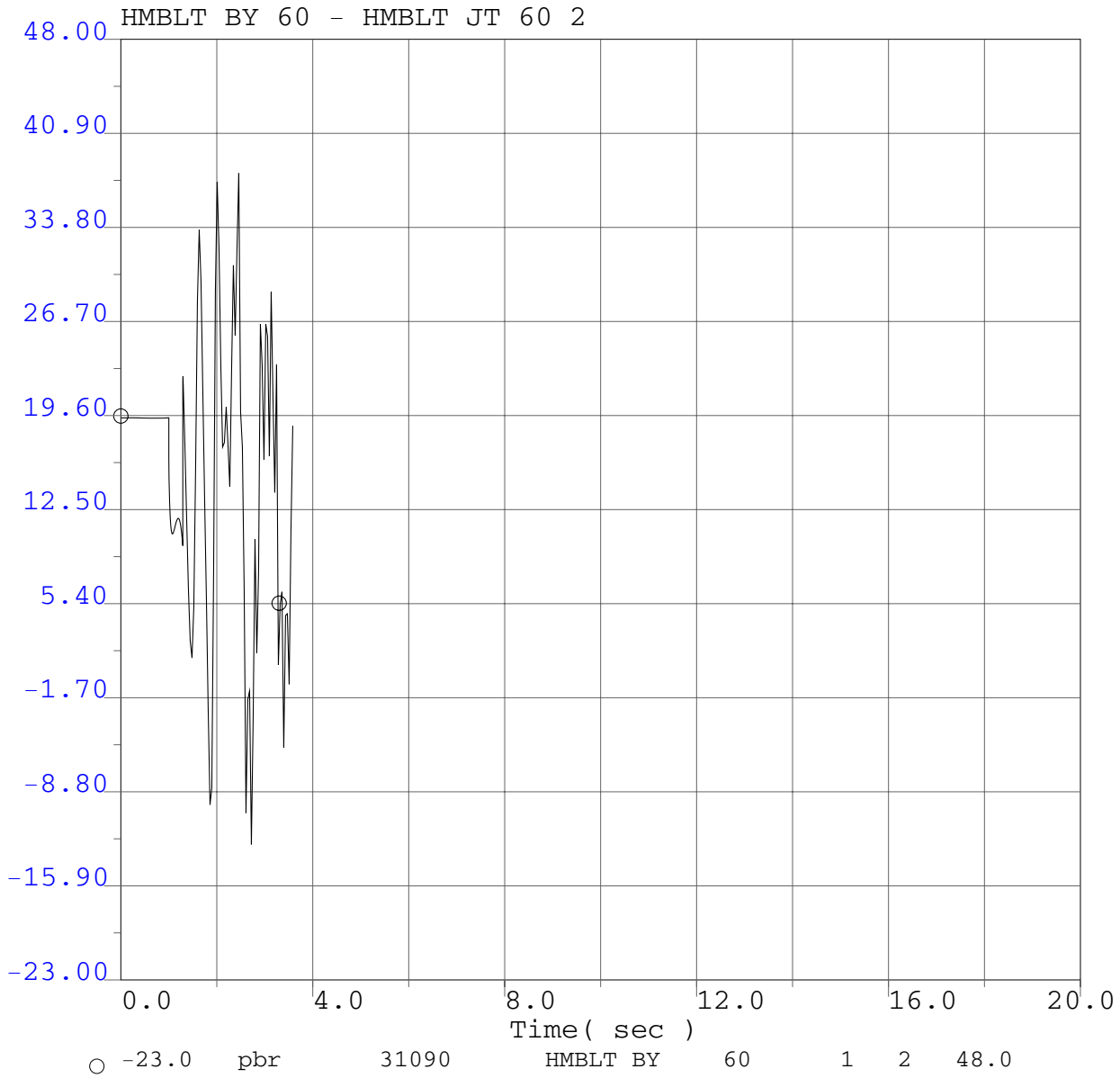

P0411 Project System Impact Study
2008 Summer Peak Base Case
P0411 @ 166.4MW
Humboldt 115kV Bus outage
3 ph 17.4 cyc flt @ Humboldt 115kV bus & clr Humboldt 115kV bus

P0411 Project System Impact Study

Selected PG&E Transmission Line Flows (MW)

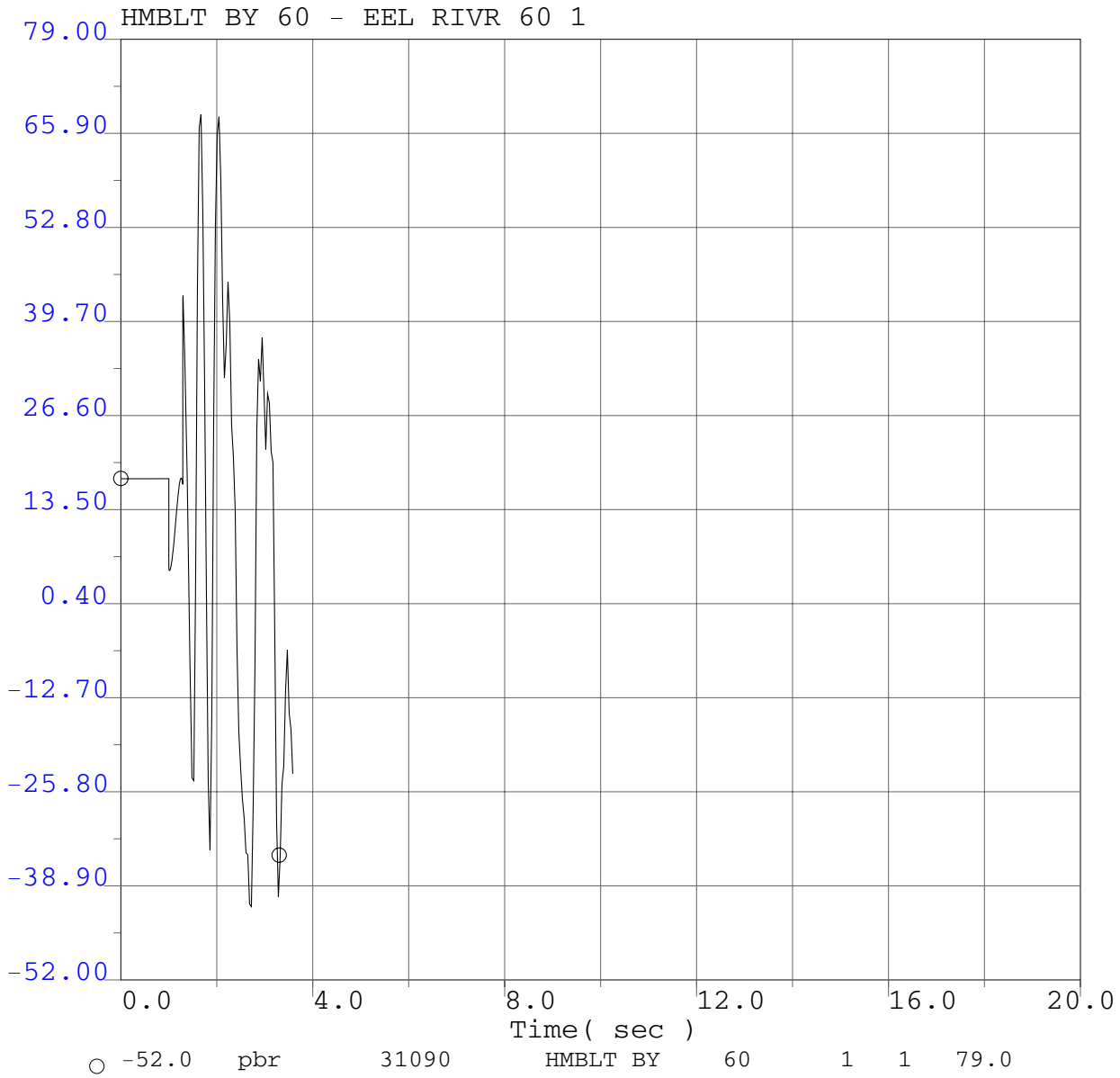

P0411 Project System Impact Study
2008 Summer Peak Base Case
P0411 @ 166.4MW
Humboldt 115kV Bus outage
3 ph 17.4 cyc flt @ Humboldt 115kV bus & clr Humboldt 115kV bus

P0411 Project System Impact Study

Selected PG&E Transmission Line Flows (MW)

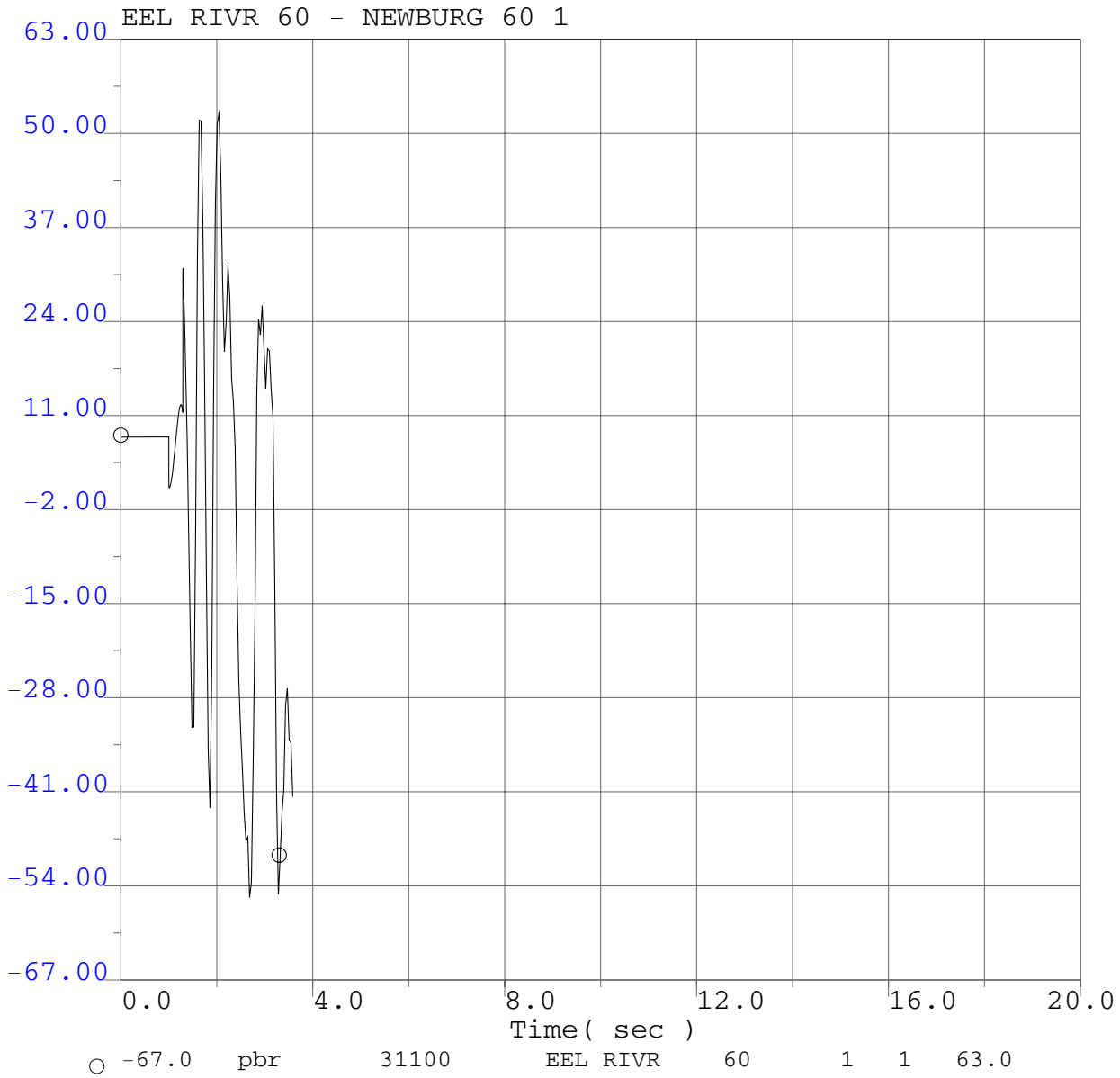

P0411 Project System Impact Study
2008 Summer Peak Base Case
P0411 @ 166.4MW
Humboldt 115kV Bus outage
3 ph 17.4 cyc flt @ Humboldt 115kV bus & clr Humboldt 115kV bus

P0411 Project System Impact Study

Selected PG&E Transmission Line Flows (MW)

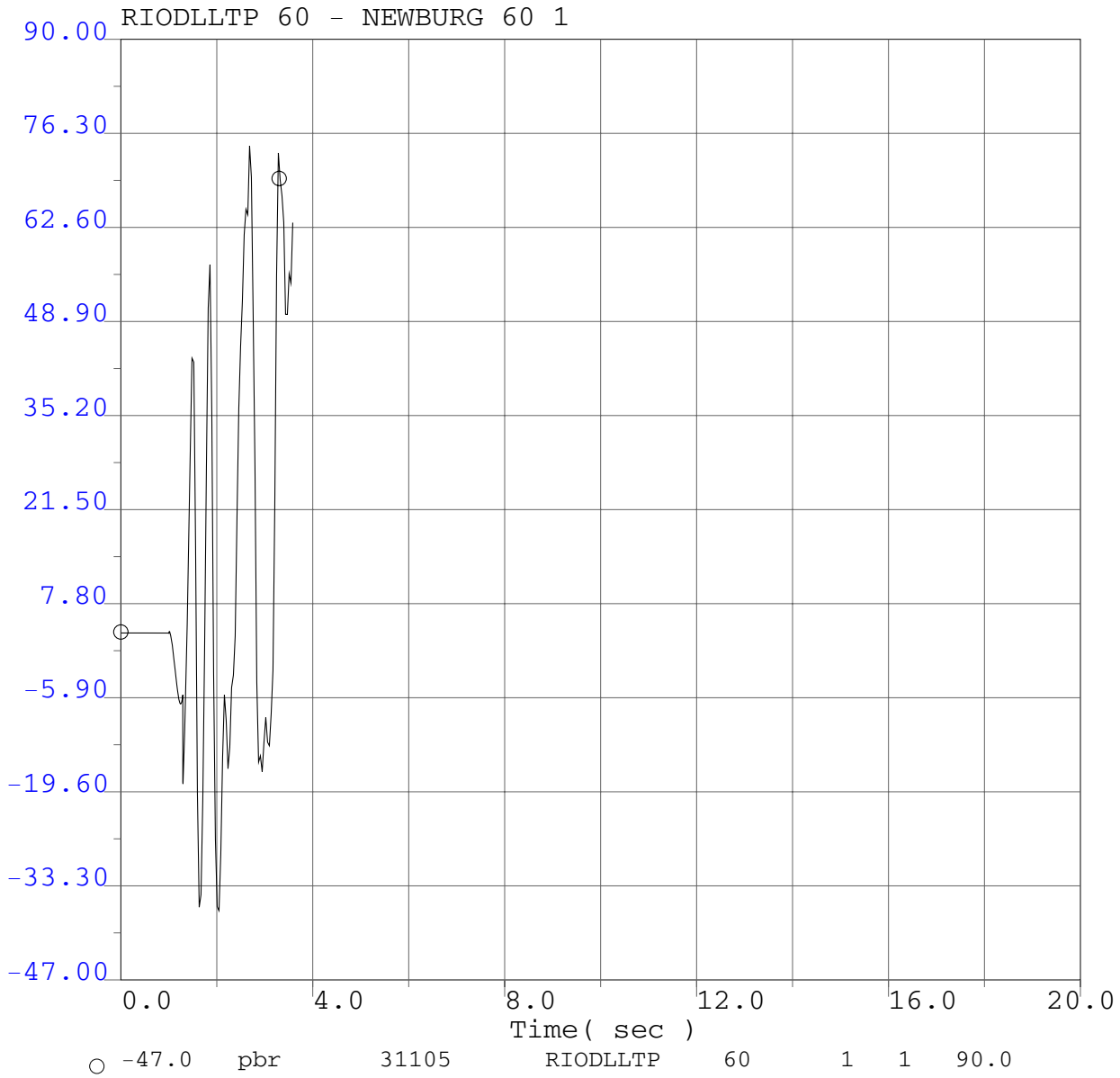

P0411 Project System Impact Study
2008 Summer Peak Base Case
P0411 @ 166.4MW
Humboldt 115kV Bus outage
3 ph 17.4 cyc flt @ Humboldt 115kV bus & clr Humboldt 115kV bus

P0411 Project System Impact Study

Selected PG&E Transmission Line Flows (MW)

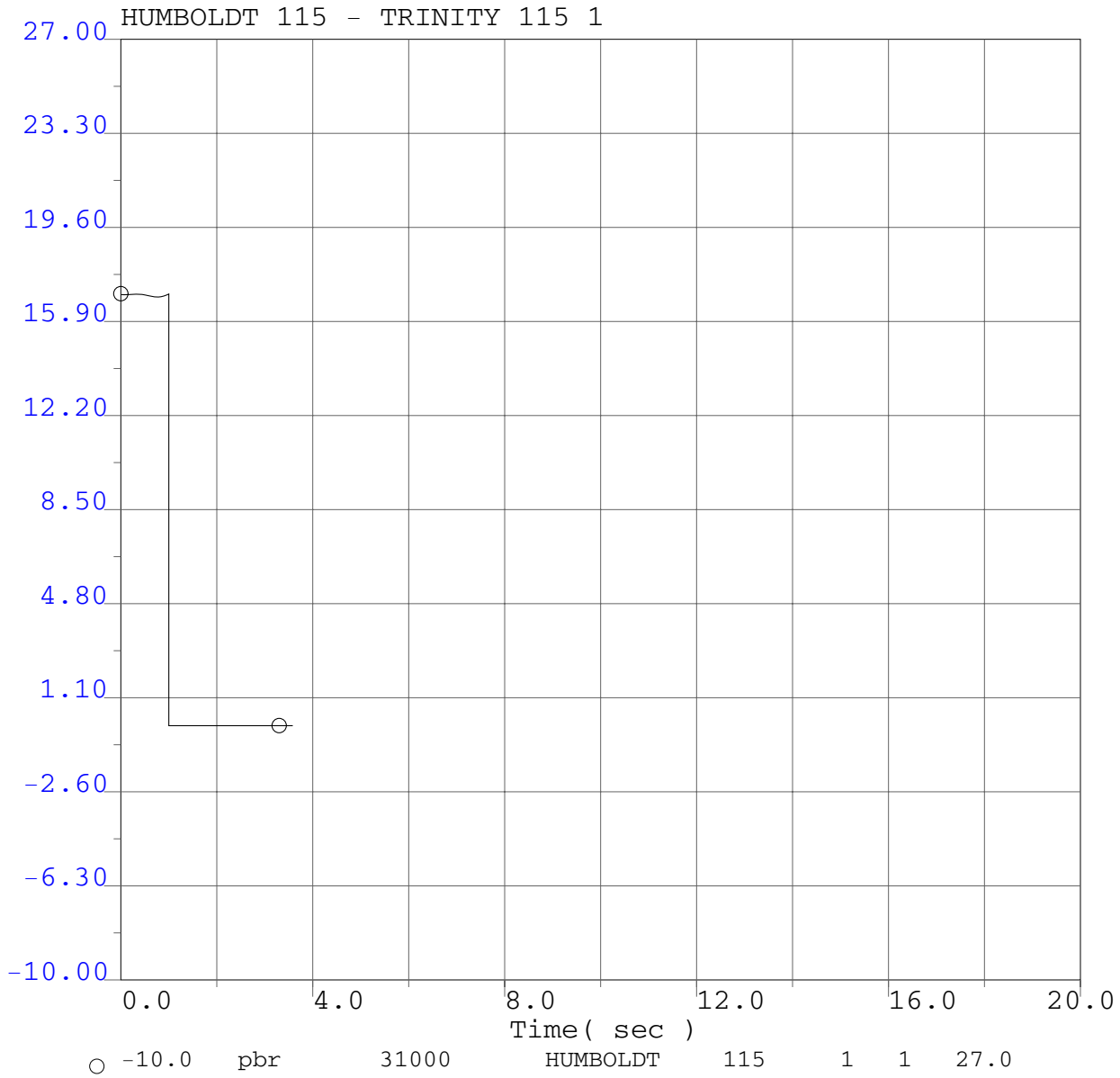

P0411 Project System Impact Study
2008 Summer Peak Base Case
P0411 @ 166.4MW
Humboldt 115kV Bus outage
3 ph 17.4 cyc flt @ Humboldt 115kV bus & clr Humboldt 115kV bus

P0411 Project System Impact Study

Selected PG&E Transmission Line Flows (MW)

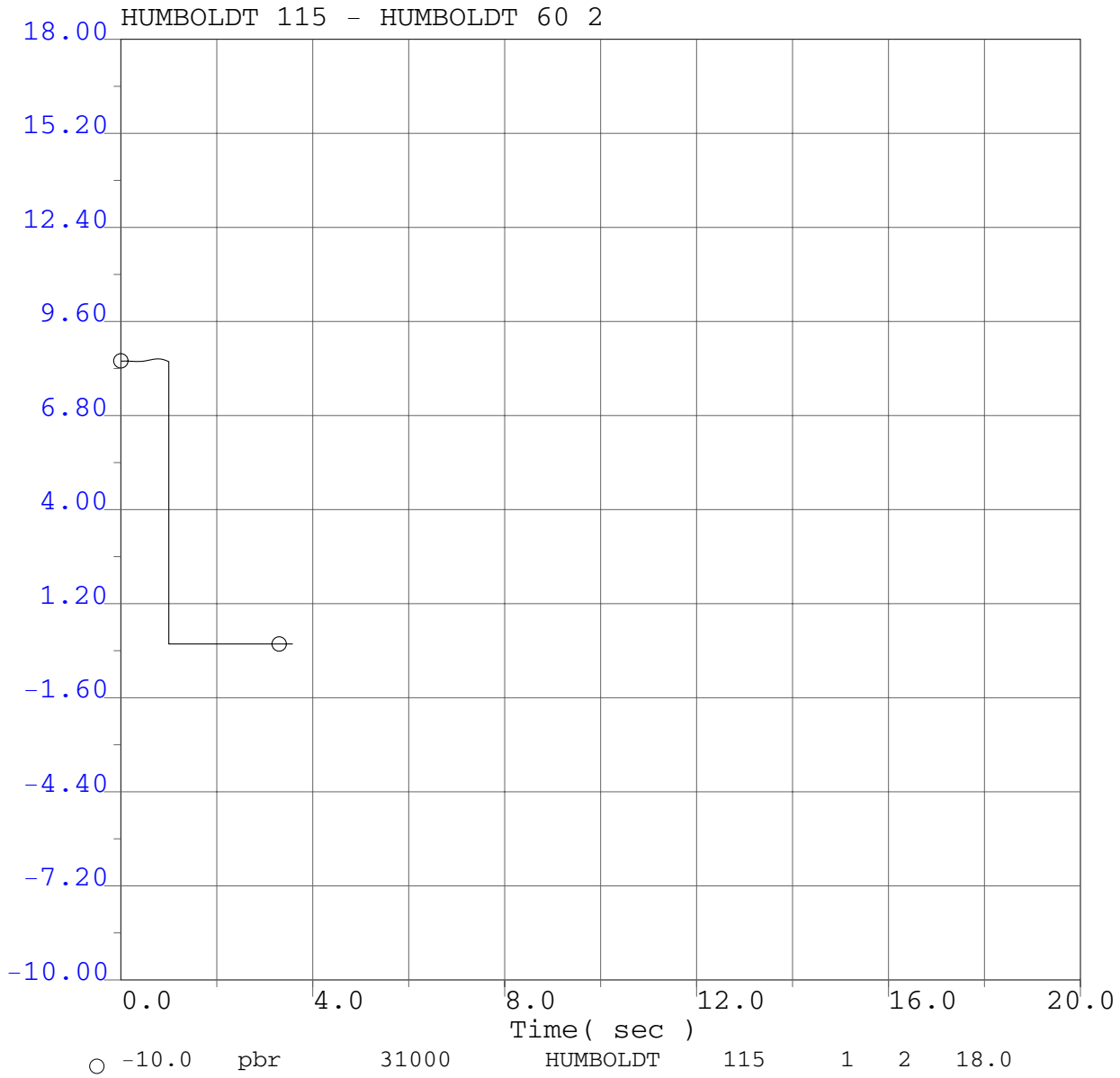

P0411 Project System Impact Study
2008 Summer Peak Base Case
P0411 @ 166.4MW
Humboldt 115kV Bus outage
3 ph 17.4 cyc flt @ Humboldt 115kV bus & clr Humboldt 115kV bus

P0411 Project System Impact Study

Selected PG&E Transmission Line Flows (MW)

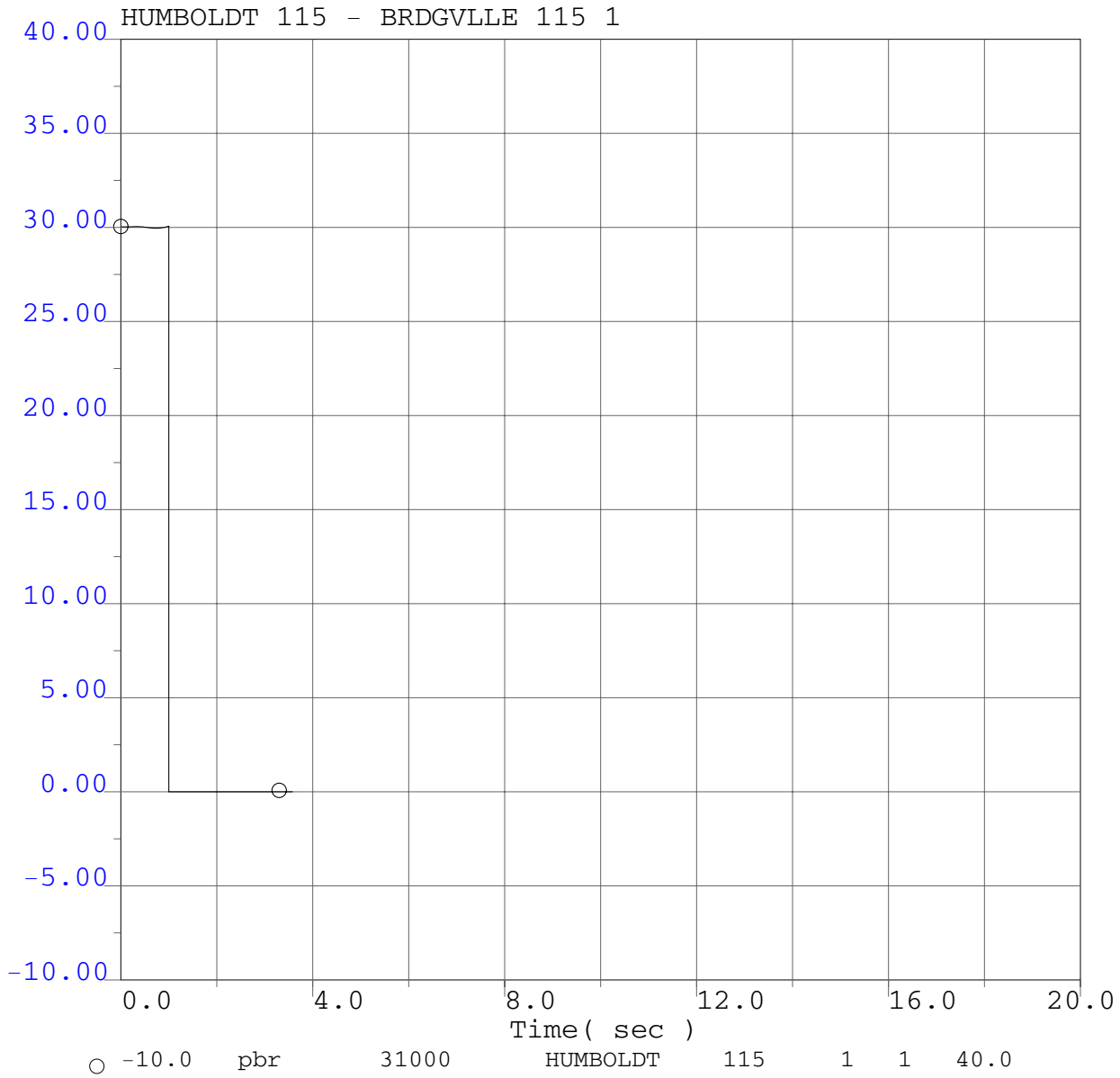

P0411 Project System Impact Study
2008 Summer Peak Base Case
P0411 @ 166.4MW
Humboldt 115kV Bus outage
3 ph 17.4 cyc flt @ Humboldt 115kV bus & clr Humboldt 115kV bus

P0411 Project System Impact Study

Selected PG&E Transmission Line Flows (MW)

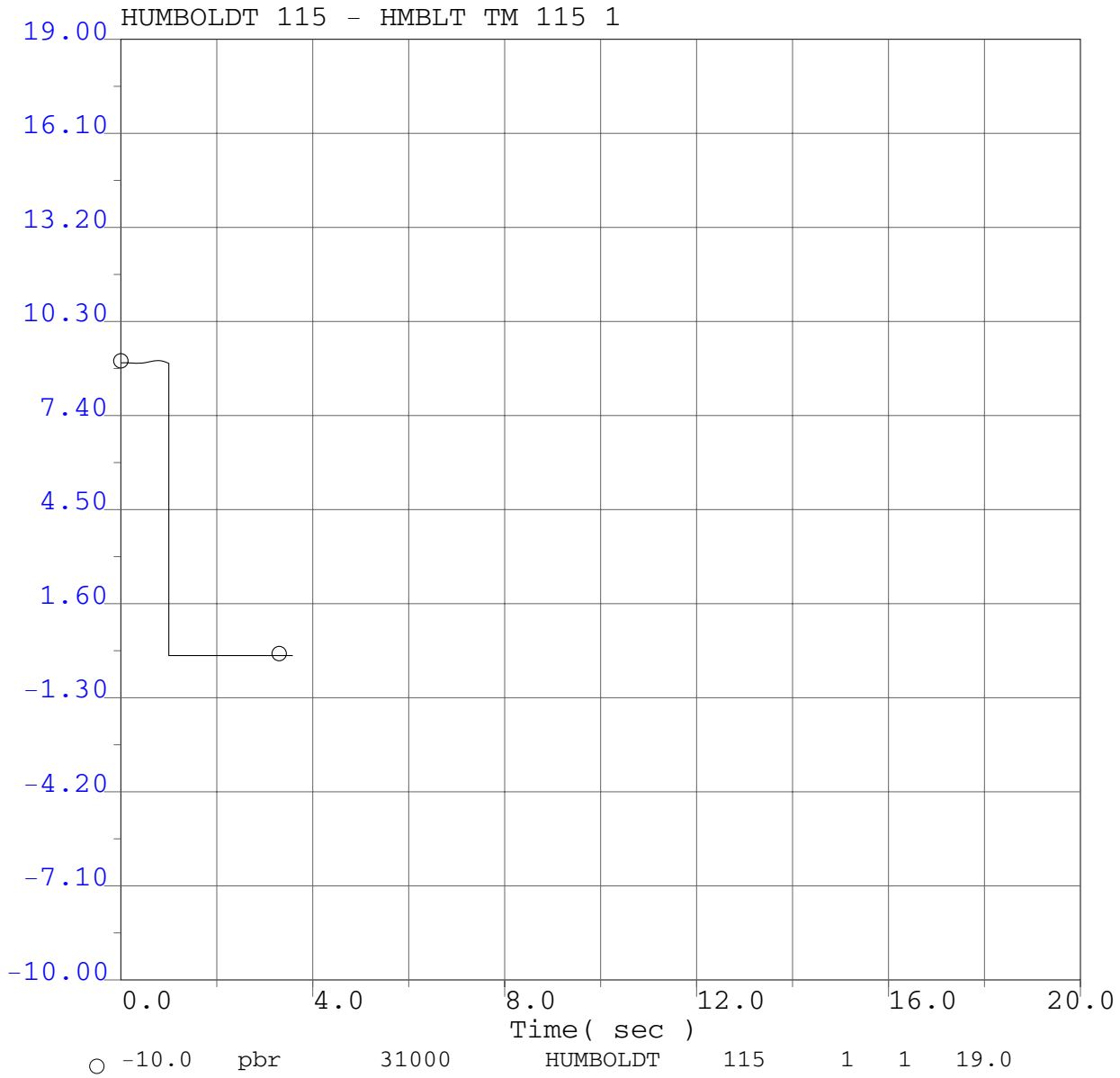

P0411 Project System Impact Study
2008 Summer Peak Base Case
P0411 @ 166.4MW
Humboldt 115kV Bus outage
3 ph 17.4 cyc flt @ Humboldt 115kV bus & clr Humboldt 115kV bus

P0411 Project System Impact Study

Selected PG&E Bus Voltage Plots Adjacent to Fault

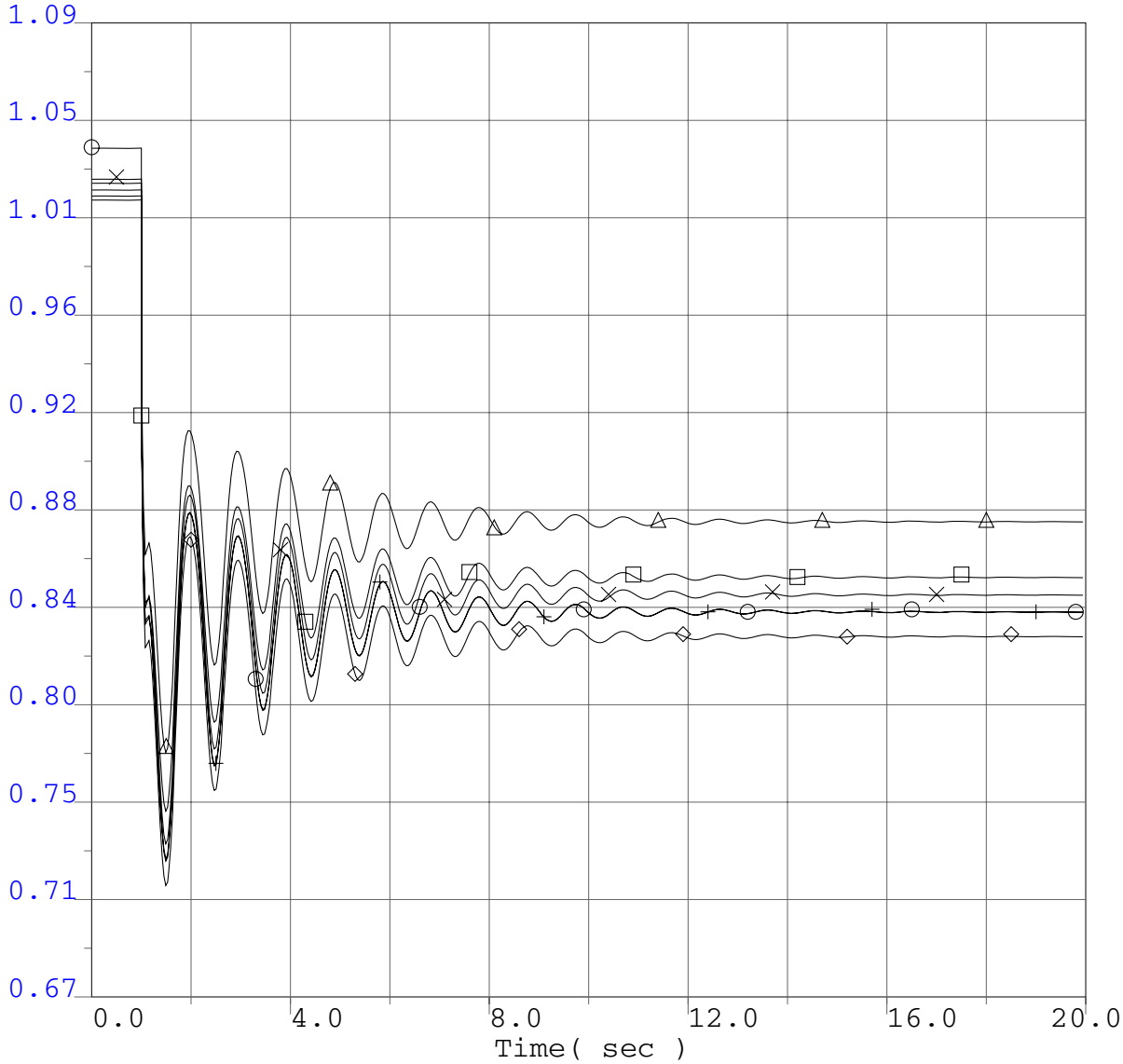

○ 0.67	vbul	31090	HMBLT BY	60.0	"*" 1	1.09
× 0.67	vbus	31080	HUMBOLDT	60.0	"*" 1	1.09
□ 0.67	vbul	31102	NEWBURG	60.0	"*" 1	1.09
△ 0.67	vbus	31105	RIODLLTP	60.0	"*" 1	1.09
◇ 0.67	vbul	31086	EUREKA	60.0	"*" 1	1.09
+ 0.67	vbul	31082	HARRIS	60.0	"*" 1	1.09

P0411 Project System Impact Study
2008 Winter Peak Base Case
P0411 @ 166.4MW
P0411 Load Rejection
No Fault

P0411 Project System Impact Study

Selected PG&E Bus Frequency Plots Adjacent to Fault

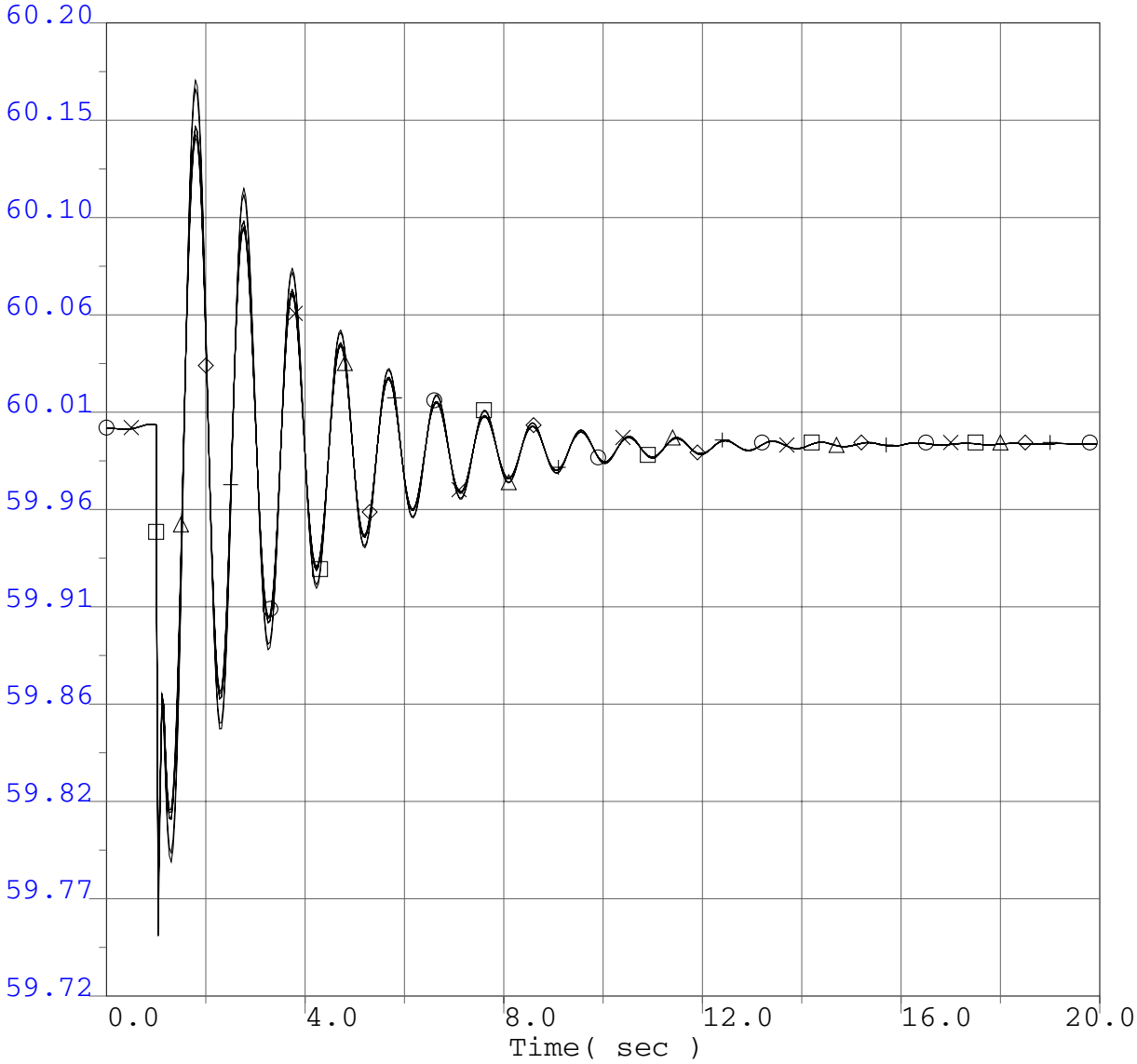

○	59.72	fbul	31090	HMBLT BY	60.0	"*" 1	60.2
×	59.72	fbus	31080	HUMBOLDT	60.0	"*" 1	60.2
□	59.72	fbul	31102	NEWBURG	60.0	"*" 1	60.2
△	59.72	fbus	31105	RIODLLTP	60.0	"*" 1	60.2
◇	59.72	fbul	31086	EUREKA	60.0	"*" 1	60.2
+	59.72	fbul	31082	HARRIS	60.0	"*" 1	60.2

P0411 Project System Impact Study
2008 Winter Peak Base Case
P0411 @ 166.4MW
P0411 Load Rejection
No Fault

P0411 Project System Impact Study

Project Generator Terminal Voltages

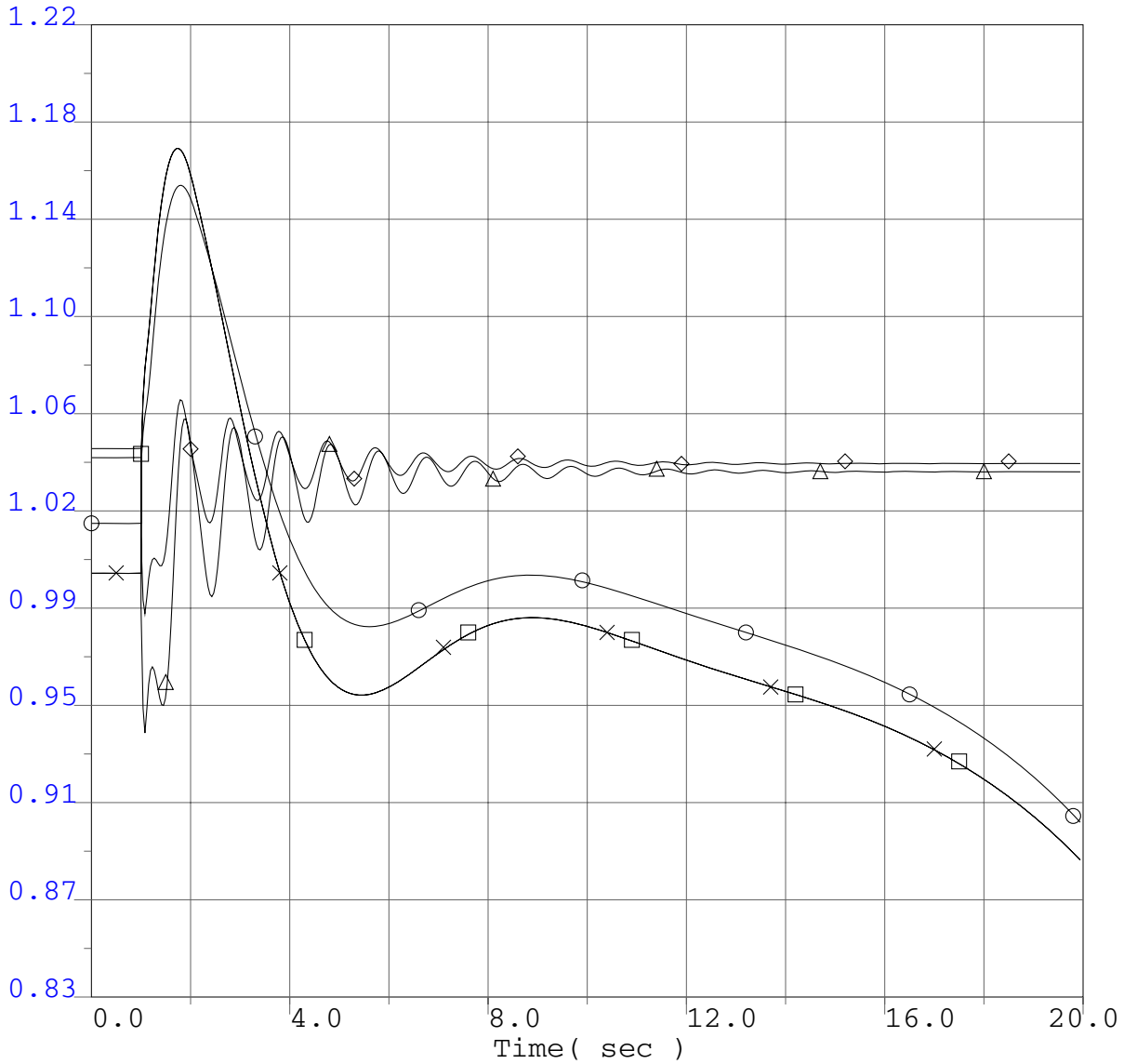

○ 0.83	vt	31180	P0411G1	13.8	"1"	1	1.22
× 0.83	vt	31181	P0411G2	13.8	"5"	1	1.22
□ 0.83	vt	31182	P0411G3	13.8	"8"	1	1.22
△ 0.83	vt	31150	FAIRHAVN	13.8	"1"	1	1.22
◇ 0.83	vt	31158	LP SAMOA	12.5	"1"	1	1.22

P0411 Project System Impact Study
2008 Winter Peak Base Case
P0411 @ 166.4MW
P0411 Load Rejection
No Fault

P0411 Project System Impact Study

Project Generator Rotor Speed

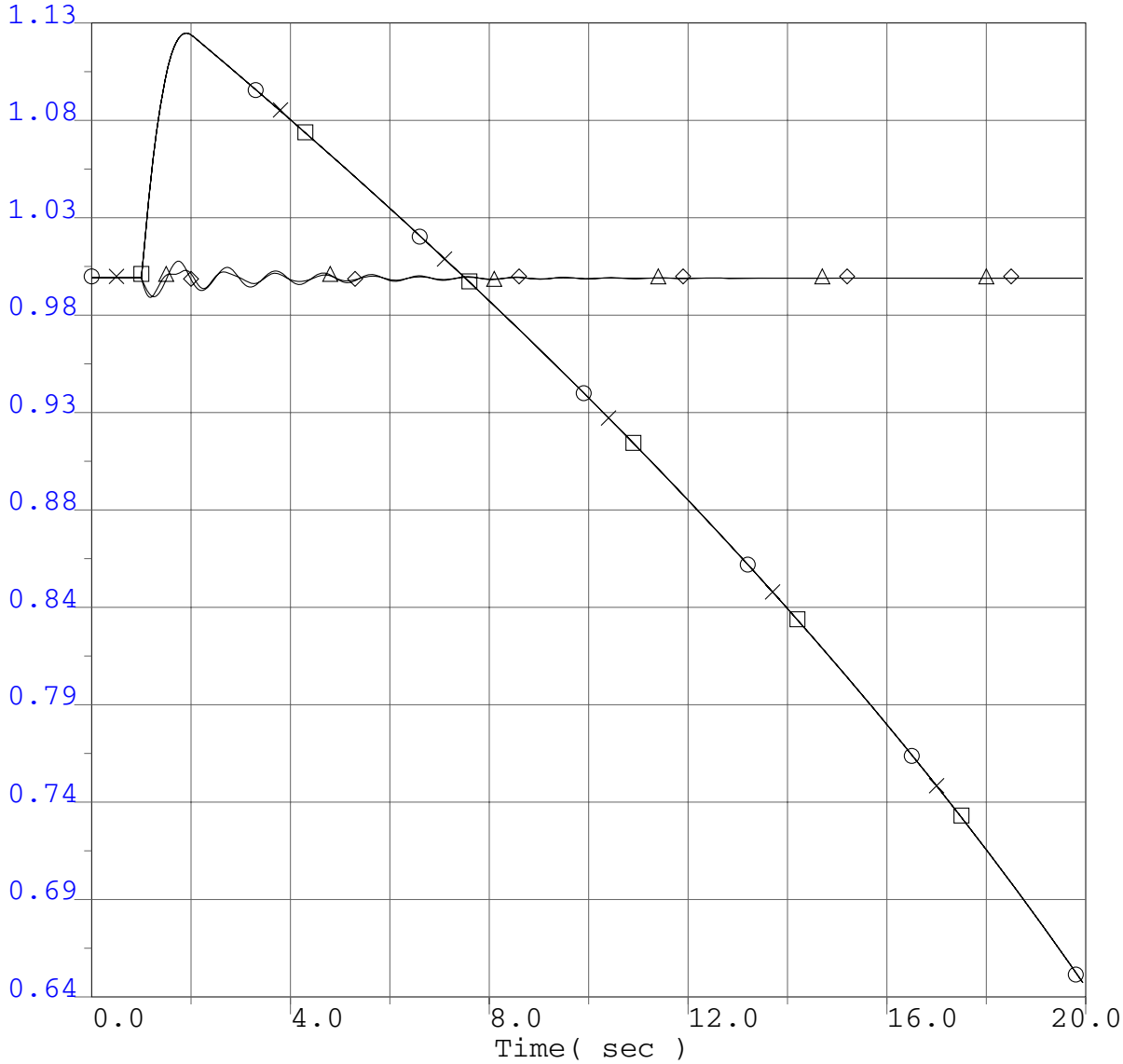

○	0.6435	spd	31180	P0411G1	13.8	"1" 1	1.1264
×	0.6435	spd	31181	P0411G2	13.8	"5" 1	1.1264
□	0.6435	spd	31182	P0411G3	13.8	"8" 1	1.1264
△	0.6435	spd	31150	FAIRHAVN	13.8	"1" 1	1.1264
◇	0.6435	spd	31158	LP SAMOA	12.5	"1" 1	1.1264

P0411 Project System Impact Study
2008 Winter Peak Base Case
P0411 @ 166.4MW
P0411 Load Rejection
No Fault

P0411 Project System Impact Study

Project Generator Terminal Power

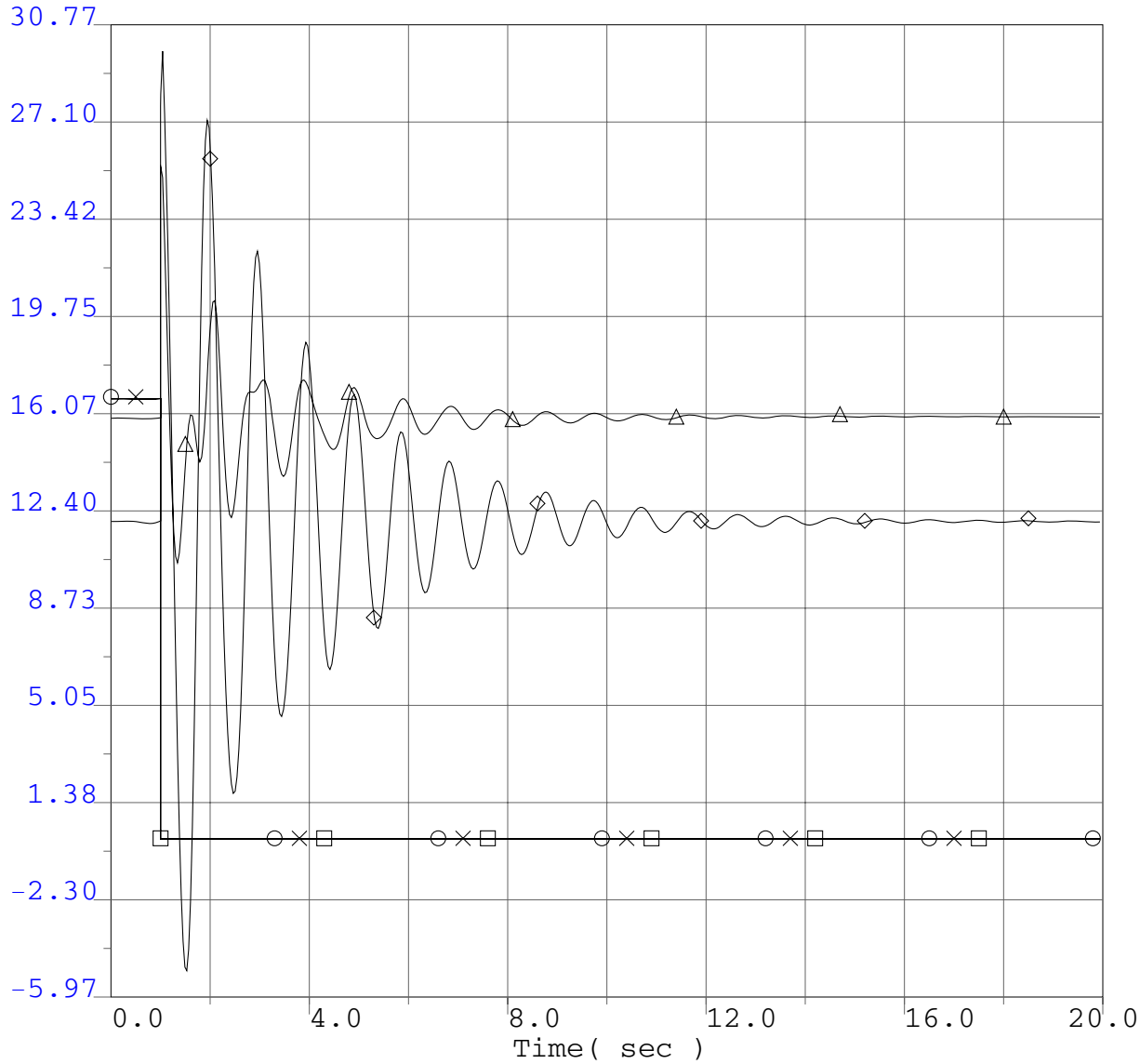

○	-5.97	pg	31180	P0411G1	13.8	"1" 1	30.77
×	-5.97	pg	31181	P0411G2	13.8	"5" 1	30.77
□	-5.97	pg	31182	P0411G3	13.8	"8" 1	30.77
△	-5.97	pg	31150	FAIRHAVN	13.8	"1" 1	30.77
◇	-5.97	pg	31158	LP SAMOA	12.5	"1" 1	30.77

P0411 Project System Impact Study
2008 Winter Peak Base Case
P0411 @ 166.4MW
P0411 Load Rejection
No Fault

P0411 Project System Impact Study

Project Generator Terminal Reactive Power

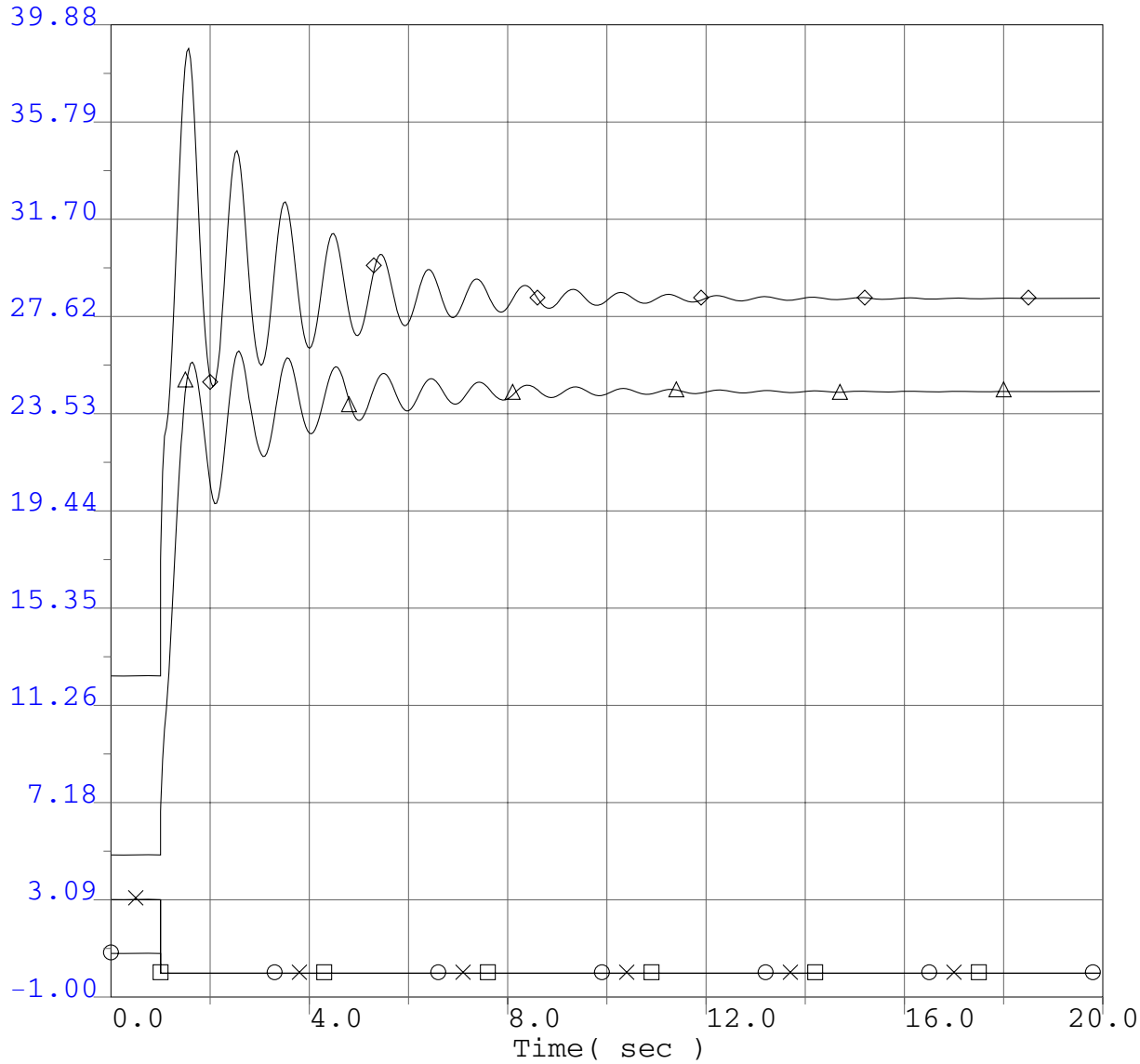

○	-1.0	qg	31180	P0411G1	13.8	"1" 1	39.88
×	-1.0	qg	31181	P0411G2	13.8	"5" 1	39.88
□	-1.0	qg	31182	P0411G3	13.8	"8" 1	39.88
△	-1.0	qg	31150	FAIRHAVN	13.8	"1" 1	39.88
◇	-1.0	qg	31158	LP SAMOA	12.5	"1" 1	39.88

P0411 Project System Impact Study
2008 Winter Peak Base Case
P0411 @ 166.4MW
P0411 Load Rejection
No Fault

P0411 Project System Impact Study

Selected WECC Bus Voltage Plots

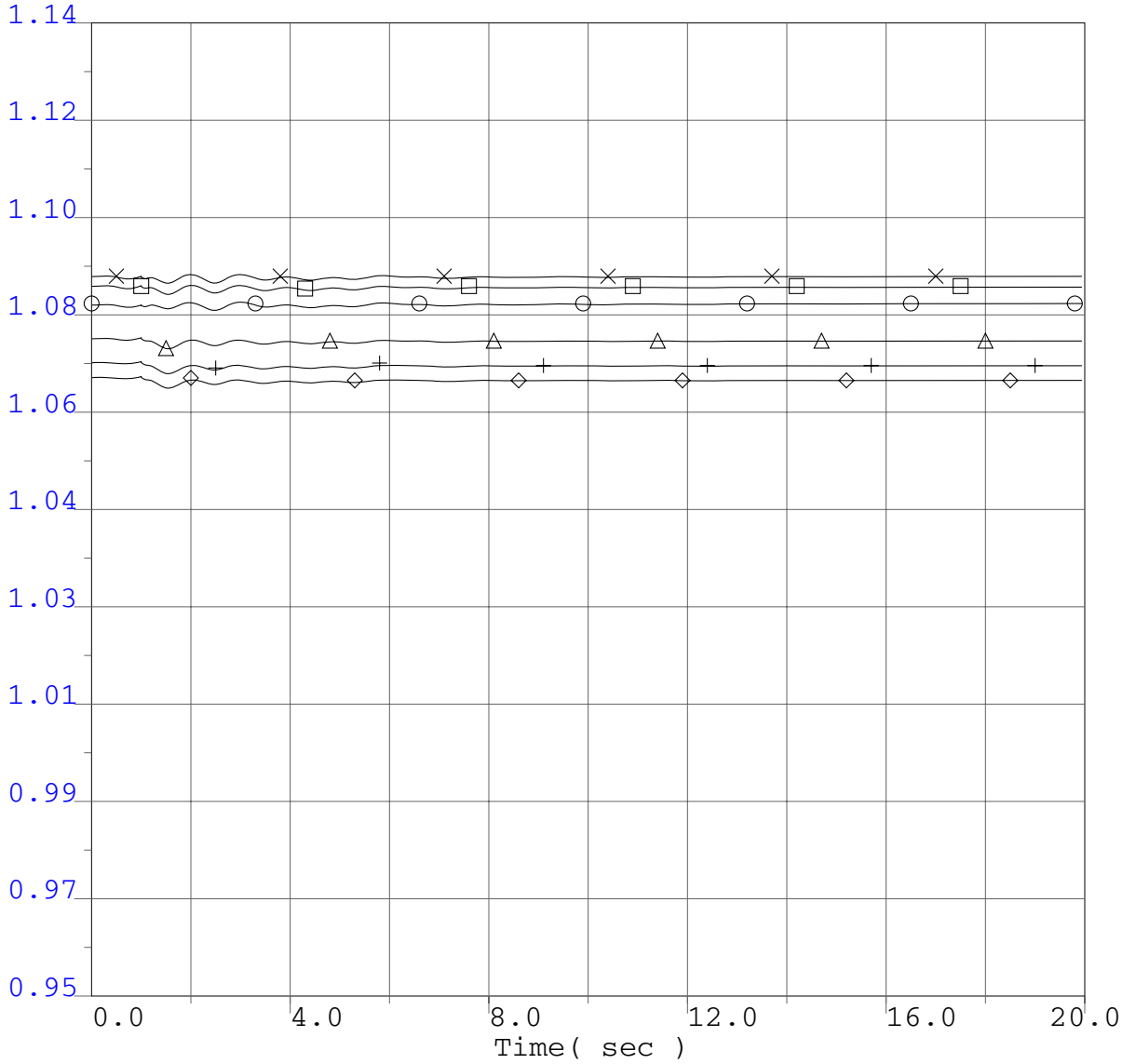

○	0.95	vbus	40687	MALIN	500.0	"*" 1	1.14
×	0.95	vbus	30005	ROUND MT	500.0	"*" 1	1.14
□	0.95	vbus	30015	TABLE MT	500.0	"*" 1	1.14
△	0.95	vbus	30030	VACA-DIX	500.0	"*" 1	1.14
◇	0.95	vbus	30040	TESLA	500.0	"*" 1	1.14
+	0.95	vbus	30035	TRACY	500.0	"*" 1	1.14

P0411 Project System Impact Study
2008 Winter Peak Base Case
P0411 @ 166.4MW
P0411 Load Rejection
No Fault

P0411 Project System Impact Study

Selected WECC Bus Voltage Plots

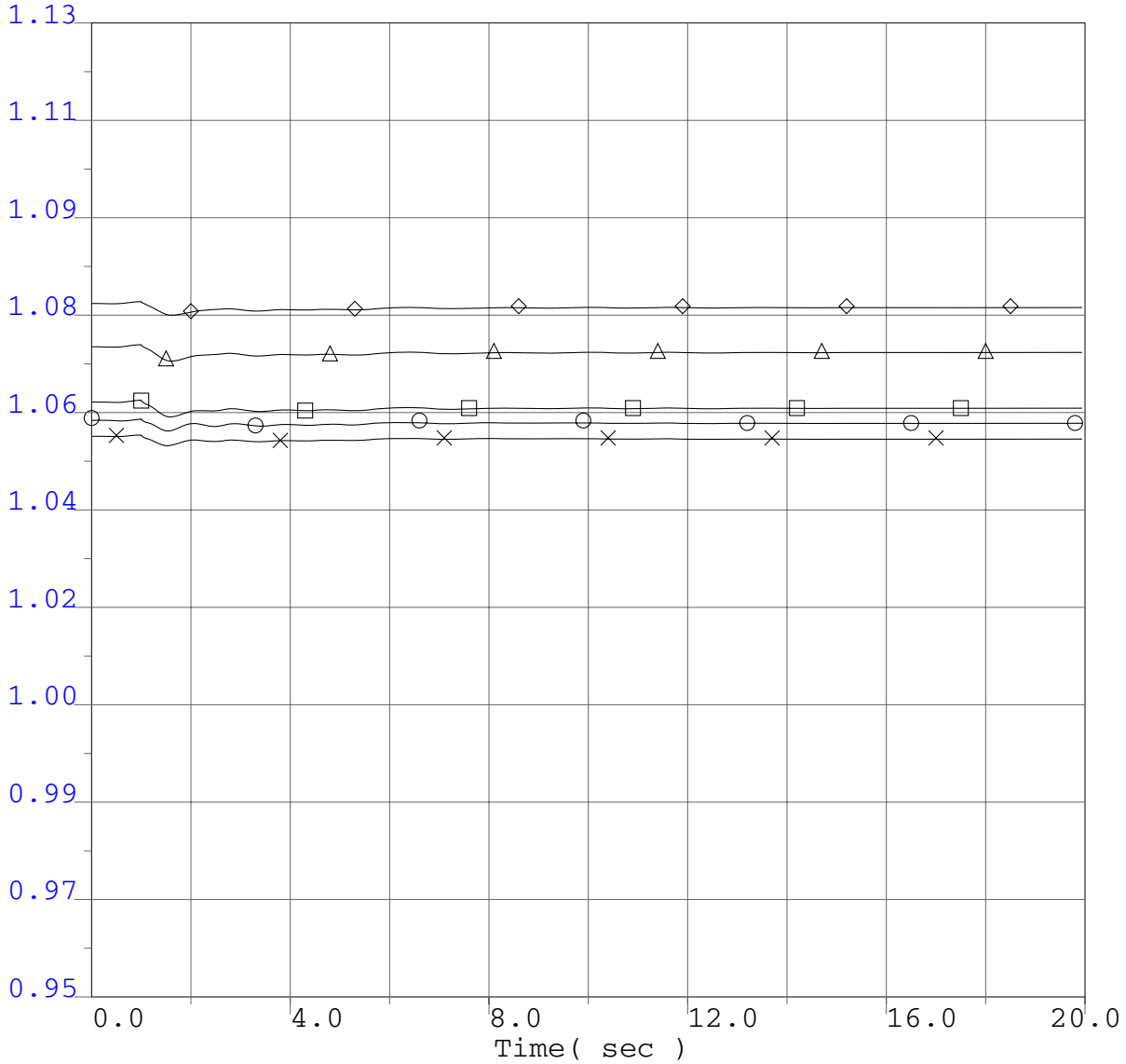

○ 0.95	vbus	30042	METCALF	500.0	"*"	1	1.13
× 0.95	vbus	30045	MOSSLAND	500.0	"*"	1	1.13
□ 0.95	vbus	30050	LOSBANOS	500.0	"*"	1	1.13
△ 0.95	vbus	30055	GATES	500.0	"*"	1	1.13
◇ 0.95	vbus	30060	MIDWAY	500.0	"*"	1	1.13

P0411 Project System Impact Study
2008 Winter Peak Base Case
P0411 @ 166.4MW
P0411 Load Rejection
No Fault

P0411 Project System Impact Study

Selected WECC Bus Voltage Plots

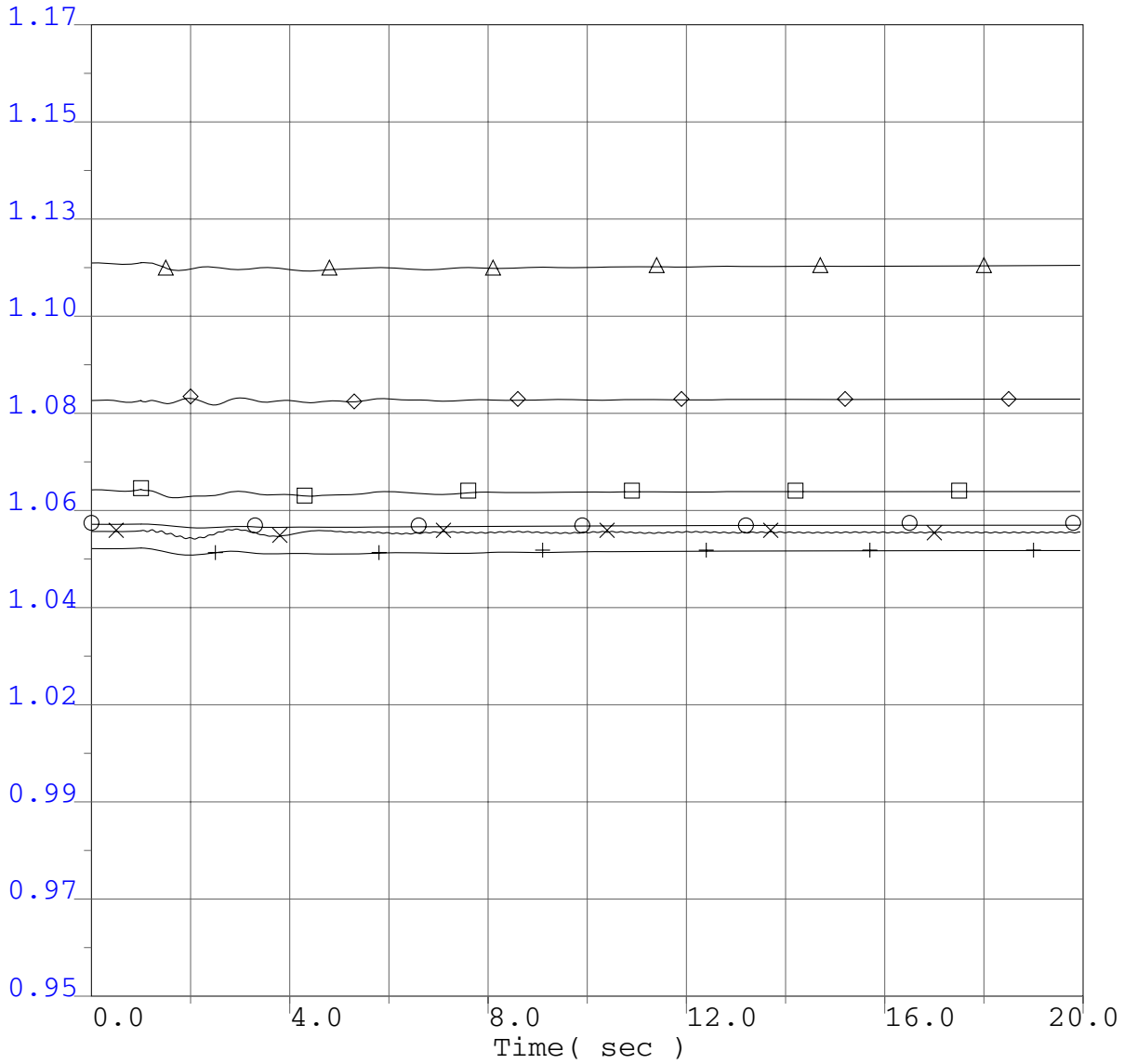

○	0.95	vbus	14001	FOURCORN	500.0	"*" 1	1.17
×	0.95	vbus	50703	NIC500	500.0	"*" 1	1.17
□	0.95	vbus	60240	MIDPOINT	500.0	"*" 1	1.17
△	0.95	vbus	62012	TOWN2	500.0	"*" 1	1.17
◇	0.95	vbus	40687	MALIN	500.0	"*" 1	1.17
+	0.95	vbus	66340	SIGURD	345.0	"*" 1	1.17

P0411 Project System Impact Study
2008 Winter Peak Base Case
P0411 @ 166.4MW
P0411 Load Rejection
No Fault

P0411 Project System Impact Study

Selected WECC Bus Voltage Plots

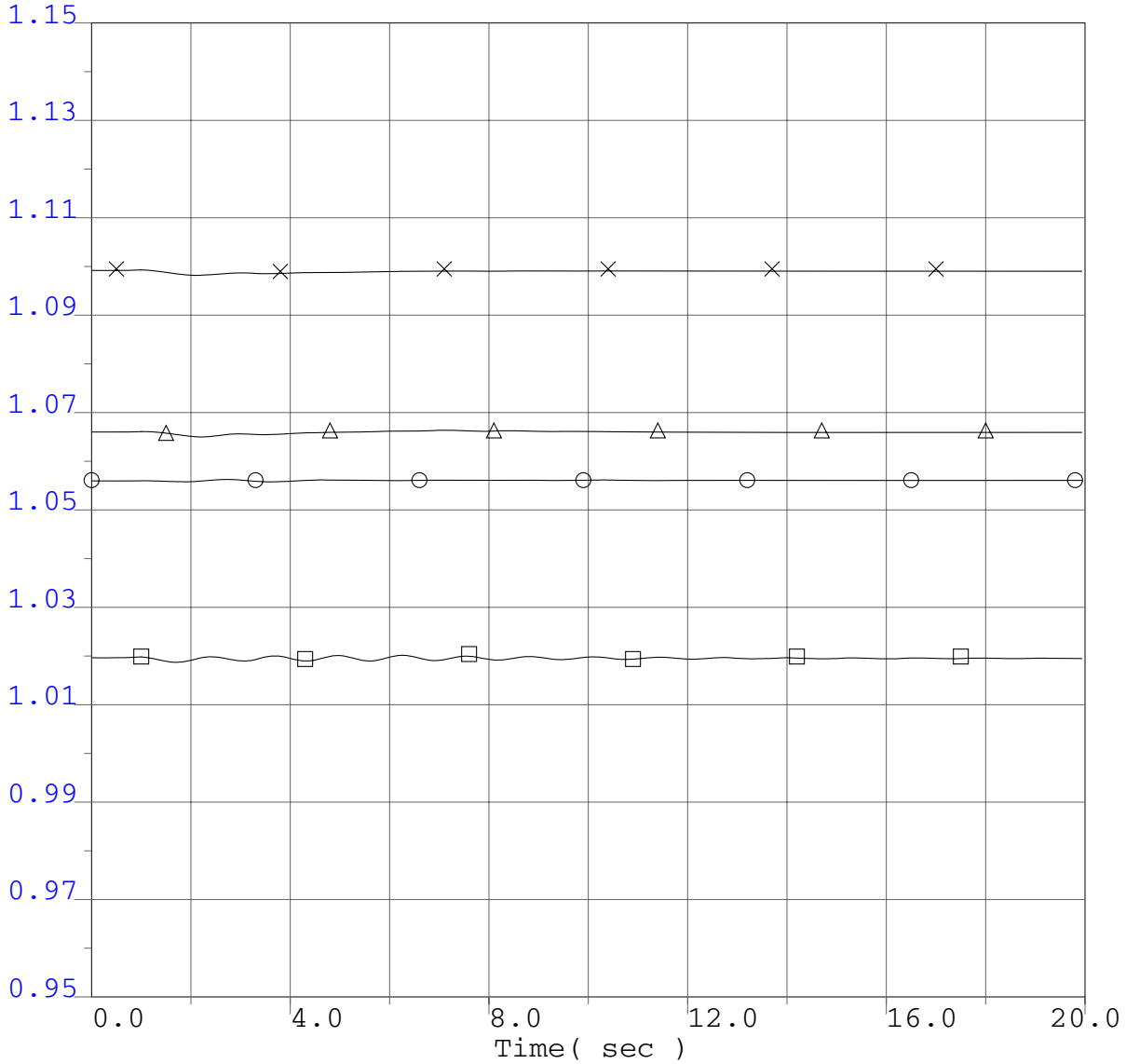

○ 0.95	vbus	54150	LANGDON2	500.0	"*"	1	1.15
× 0.95	vbus	14003	NAVAJO	500.0	"*"	1	1.15
□ 0.95	vbus	24153	VESTAL	230.0	"*"	1	1.15
△ 0.95	vbus	22360	IMPRLVLY	500.0	"*"	1	1.15

P0411 Project System Impact Study
2008 Winter Peak Base Case
P0411 @ 166.4MW
P0411 Load Rejection
No Fault

P0411 Project System Impact Study

Selected WECC Bus Frequency Plots

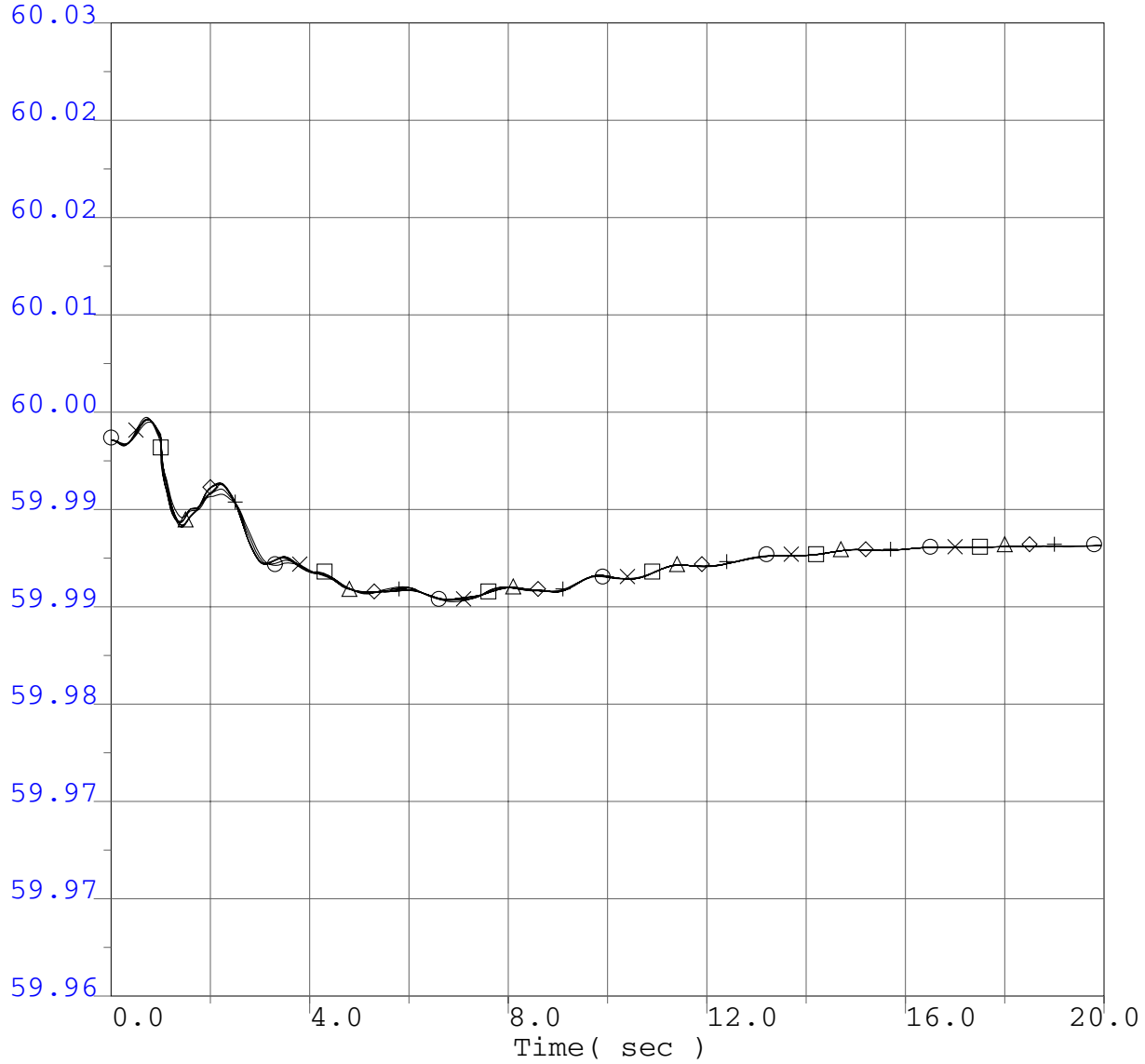

○ 59.96	fbus	40687	MALIN	500.0	"*"	1	60.03
× 59.96	fbus	30005	ROUND MT	500.0	"*"	1	60.03
□ 59.96	fbus	30015	TABLE MT	500.0	"*"	1	60.03
△ 59.96	fbus	30030	VACA-DIX	500.0	"*"	1	60.03
◇ 59.96	fbus	30040	TESLA	500.0	"*"	1	60.03
+ 59.96	fbus	30035	TRACY	500.0	"*"	1	60.03

P0411 Project System Impact Study
2008 Winter Peak Base Case
P0411 @ 166.4MW
P0411 Load Rejection
No Fault

P0411 Project System Impact Study

Selected WECC Bus Frequency Plots

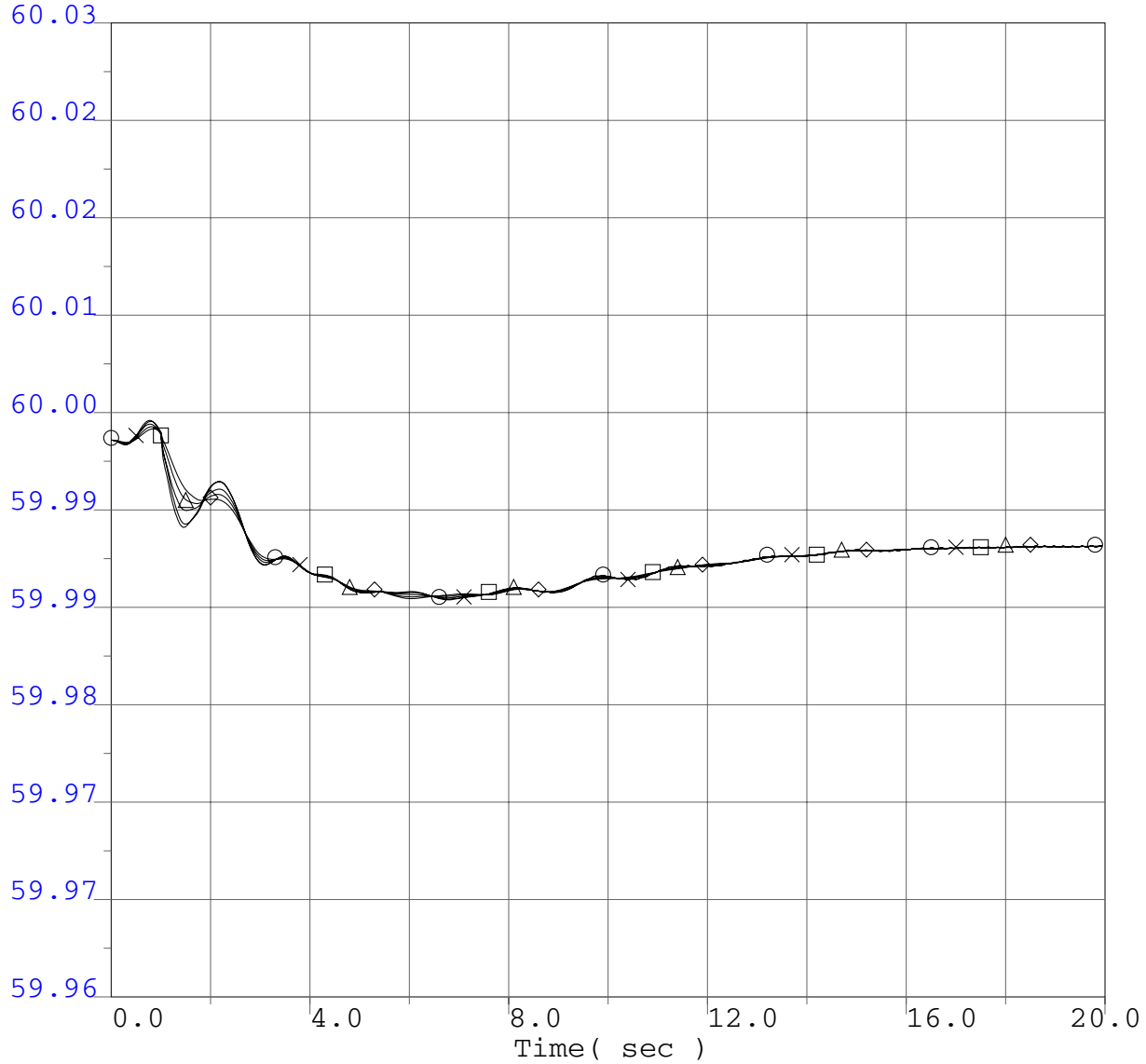

○ 59.96	fbus	30042	METCALF	500.0	"*"	1	60.03
× 59.96	fbus	30045	MOSSLAND	500.0	"*"	1	60.03
□ 59.96	fbus	30050	LOSBANOS	500.0	"*"	1	60.03
△ 59.96	fbus	30055	GATES	500.0	"*"	1	60.03
◇ 59.96	fbus	30060	MIDWAY	500.0	"*"	1	60.03

P0411 Project System Impact Study
2008 Winter Peak Base Case
P0411 @ 166.4MW
P0411 Load Rejection
No Fault

P0411 Project System Impact Study

Selected WECC Bus Frequency Plots

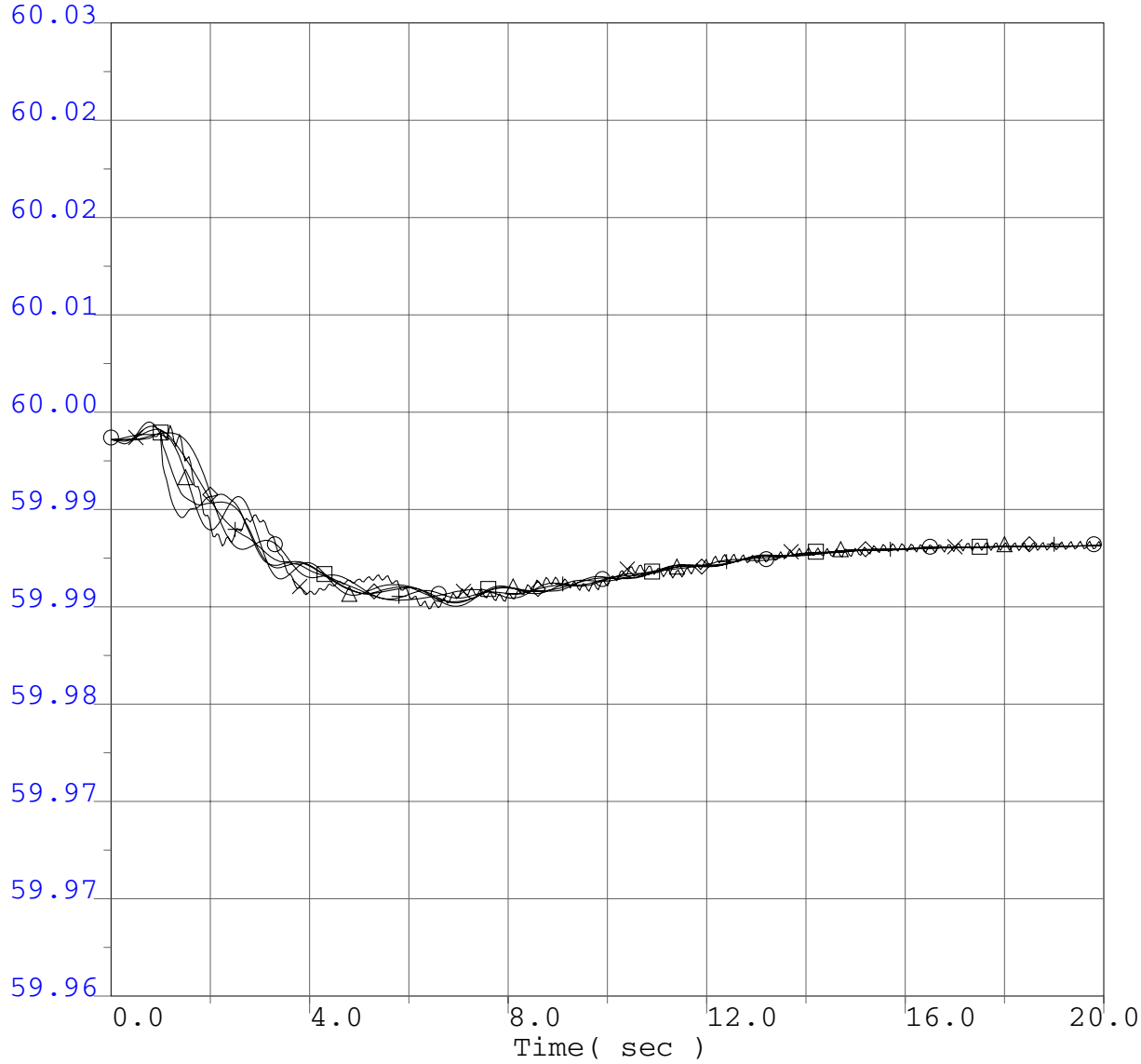

○ 59.96	fbus	14001	FOURCORN	500.0	"*"	1	60.03
× 59.96	fbus	50703	NIC500	500.0	"*"	1	60.03
□ 59.96	fbus	60240	MIDPOINT	500.0	"*"	1	60.03
△ 59.96	fbus	62012	TOWN2	500.0	"*"	1	60.03
◇ 59.96	fbus	40687	MALIN	500.0	"*"	1	60.03
+ 59.96	fbus	66340	SIGURD	345.0	"*"	1	60.03

P0411 Project System Impact Study
2008 Winter Peak Base Case
P0411 @ 166.4MW
P0411 Load Rejection
No Fault

P0411 Project System Impact Study

Selected WECC Bus Frequency Plots

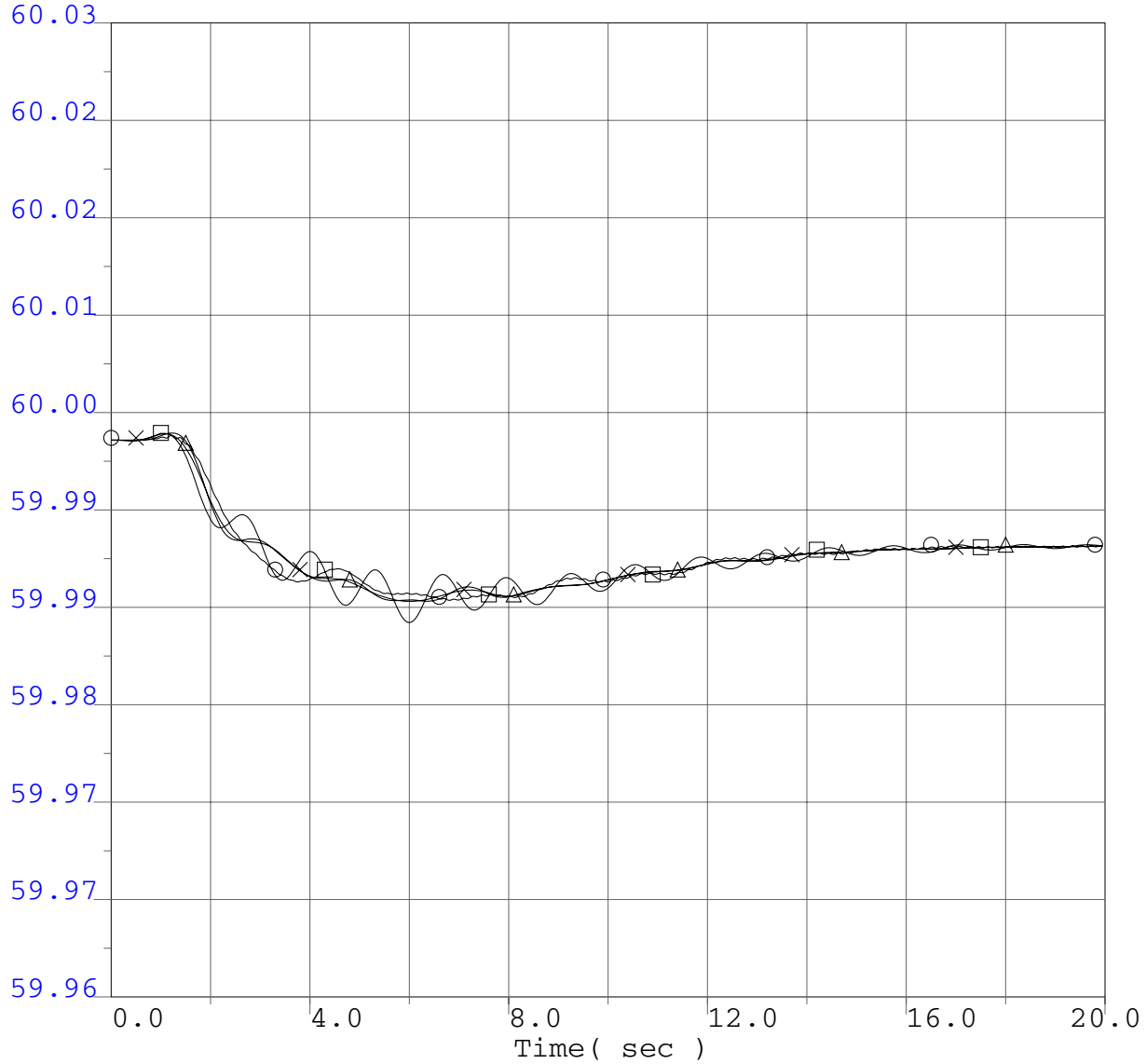

○ 59.96	fbus	54150	LANGDON2	500.0	"*"	1	60.03
× 59.96	fbus	14003	NAVAJO	500.0	"*"	1	60.03
□ 59.96	fbus	24153	VESTAL	230.0	"*"	1	60.03
△ 59.96	fbus	22360	IMPRLVLY	500.0	"*"	1	60.03

P0411 Project System Impact Study
2008 Winter Peak Base Case
P0411 @ 166.4MW
P0411 Load Rejection
No Fault

P0411 Project System Impact Study

WECC Generator Rotor Angle

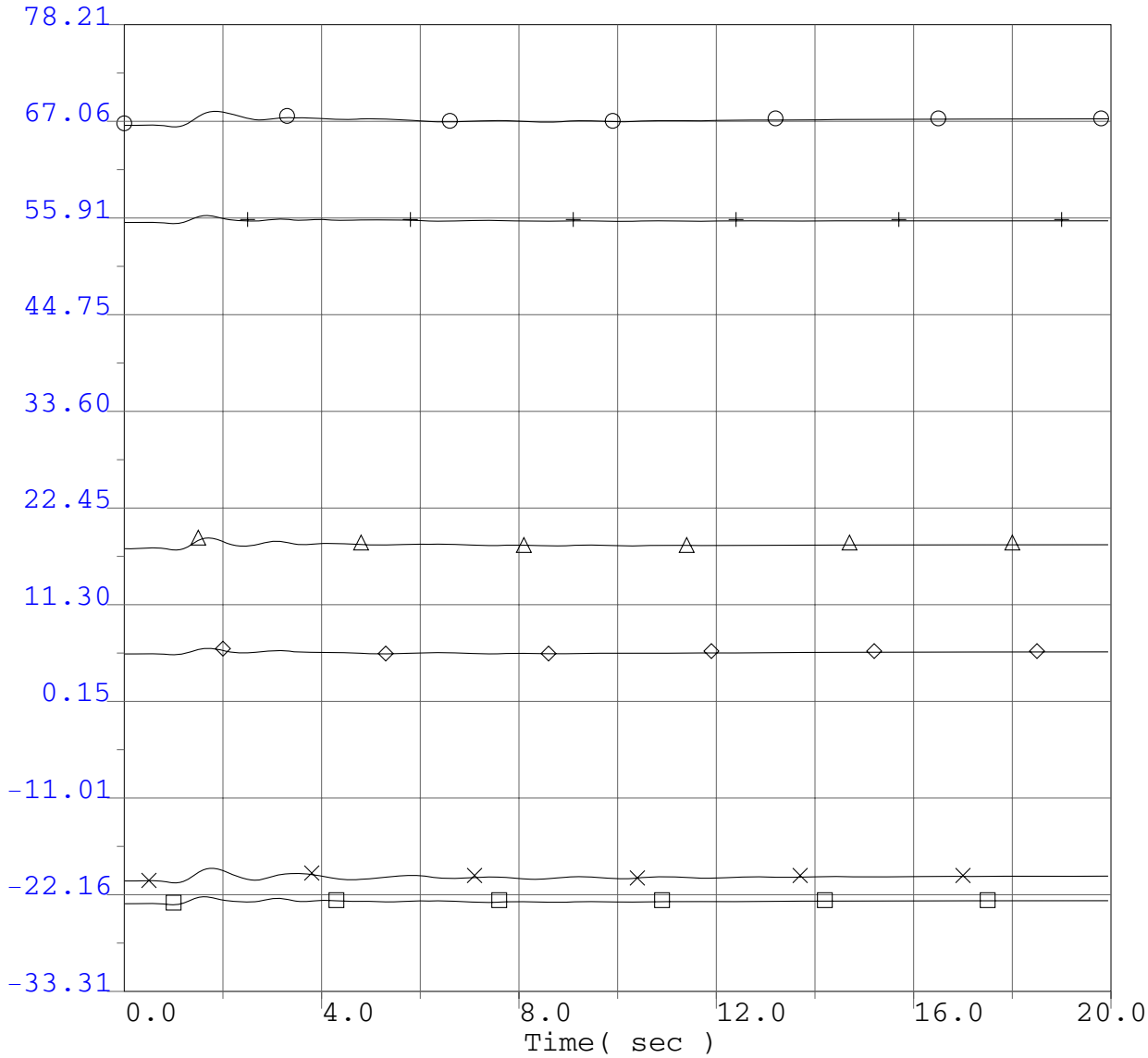

○	-33.31	ang	14914	FCNGN4CC	22.0	"H" 1	78.21
×	-33.31	ang	50500	GMS G6	13.8	"1" 1	78.21
□	-33.31	ang	60100	BRWNL 5	13.8	"1" 1	78.21
△	-33.31	ang	62048	COLSTP 3	26.0	"1" 1	78.21
◇	-33.31	ang	41701	JONDAY01	13.8	"1" 1	78.21
+	-33.31	ang	36411	DIABLO 1	25.0	"1" 1	78.21

P0411 Project System Impact Study
2008 Winter Peak Base Case
P0411 @ 166.4MW
P0411 Load Rejection
No Fault

P0411 Project System Impact Study

WECC Generator Rotor Angle

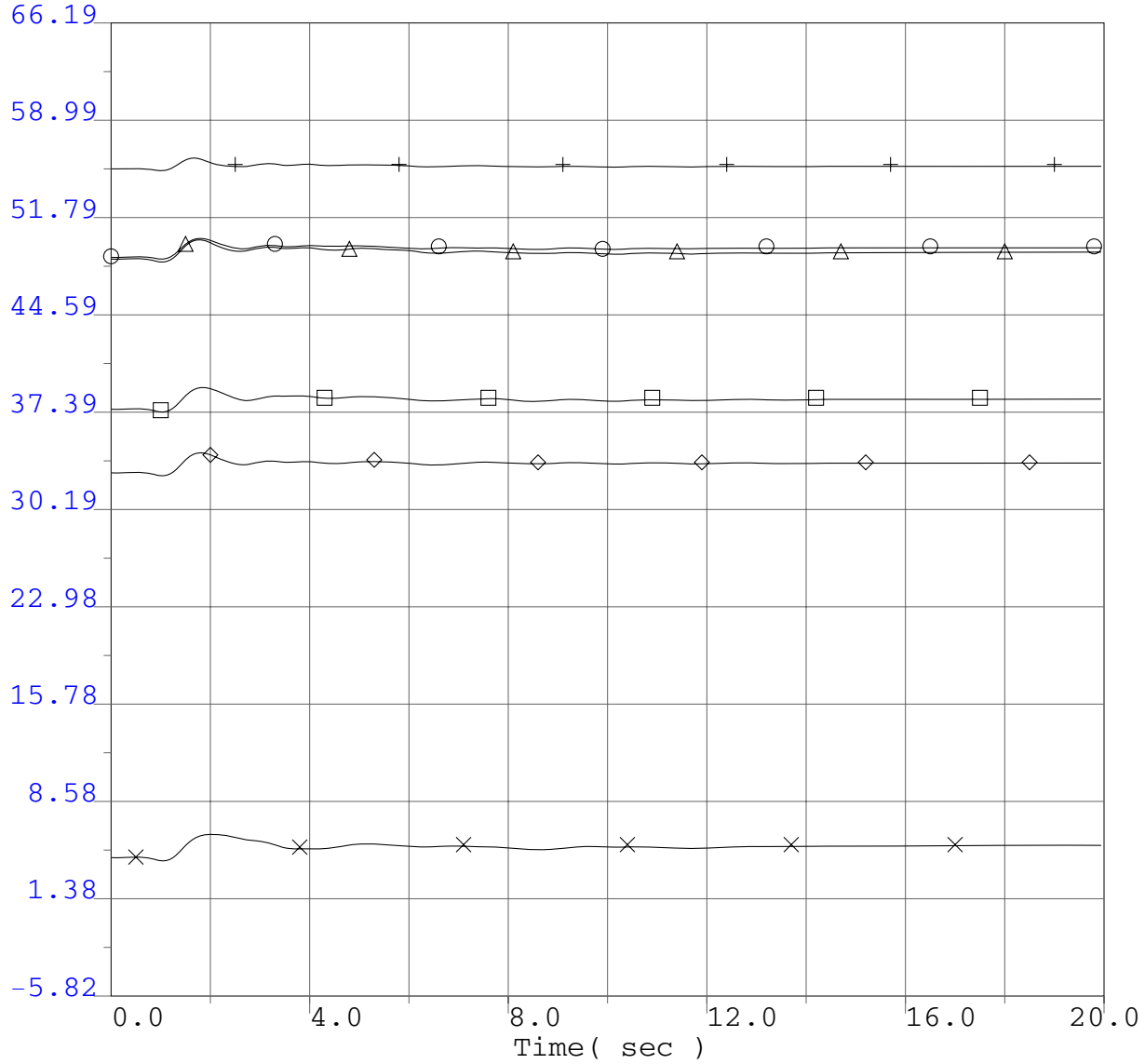

○	-5.82	ang	65490	EHUNTR 1	24.0	"1" 1	66.19
×	-5.82	ang	54280	SUND#2GN	18.0	"2" 1	66.19
□	-5.82	ang	79151	GLENC3-4	13.8	"3" 1	66.19
△	-5.82	ang	24130	S.ONOFR3	22.0	"3" 1	66.19
◇	-5.82	ang	22244	ENCINA 5	24.0	"1" 1	66.19
+	-5.82	ang	36411	DIABLO 1	25.0	"1" 1	66.19

P0411 Project System Impact Study
2008 Winter Peak Base Case
P0411 @ 166.4MW
P0411 Load Rejection
No Fault

P0411 Project System Impact Study

Selected PG&E Transmission Line Flows (MW)

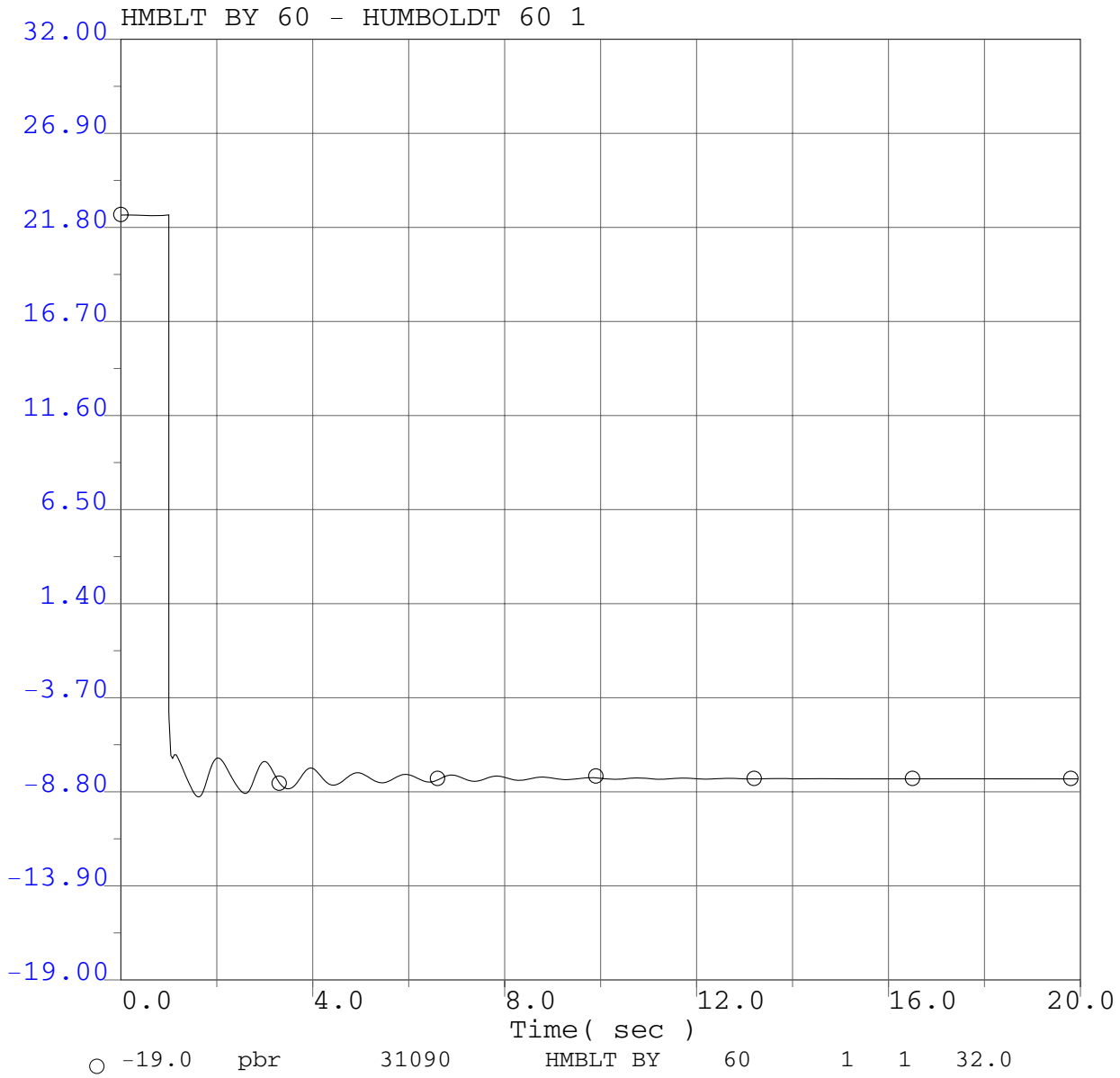

P0411 Project System Impact Study
2008 Winter Peak Base Case
P0411 @ 166.4MW
P0411 Load Rejection
No Fault

P0411 Project System Impact Study

Selected PG&E Transmission Line Flows (MW)

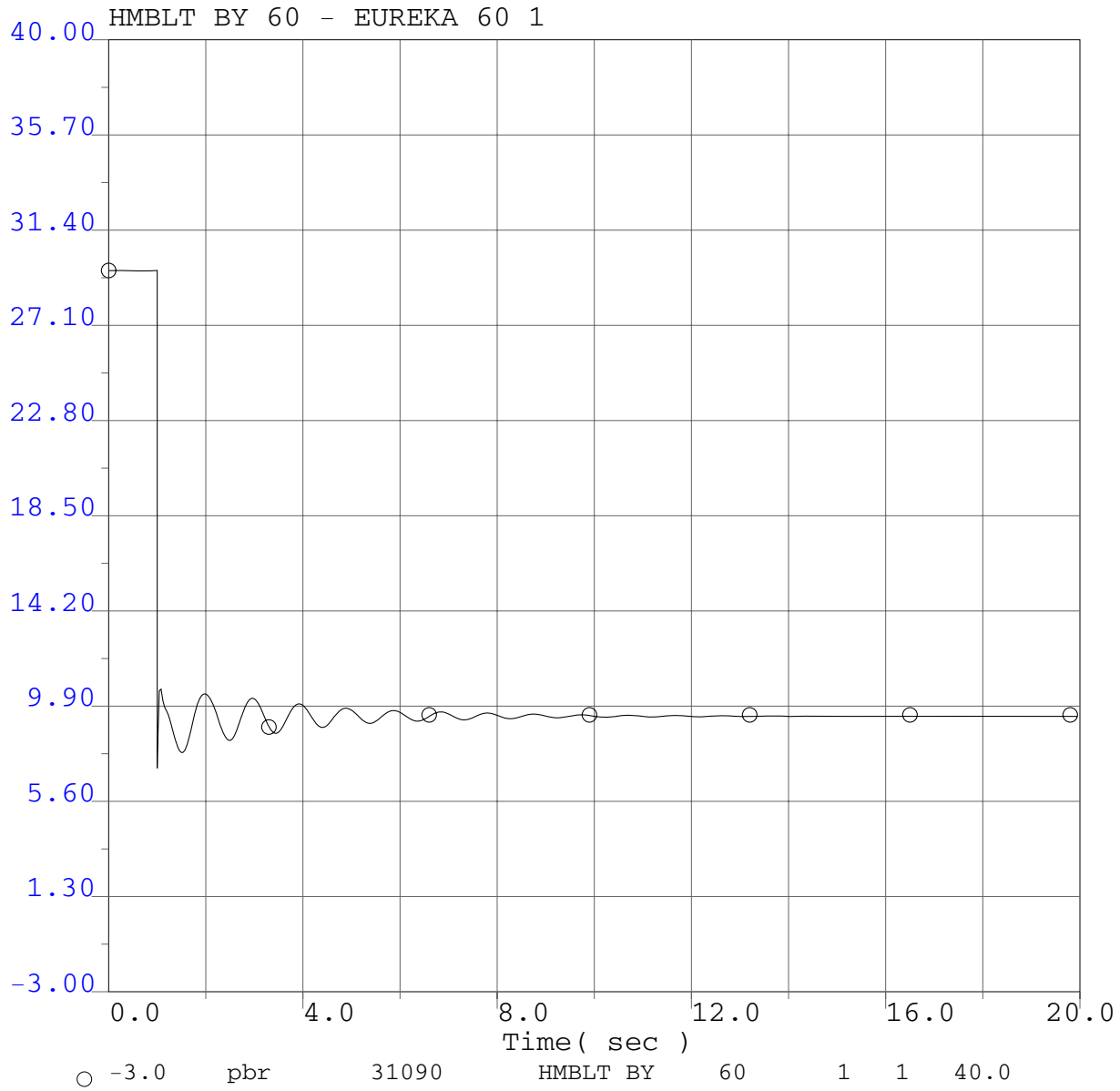

P0411 Project System Impact Study
2008 Winter Peak Base Case
P0411 @ 166.4MW
P0411 Load Rejection
No Fault

P0411 Project System Impact Study

Selected PG&E Transmission Line Flows (MW)

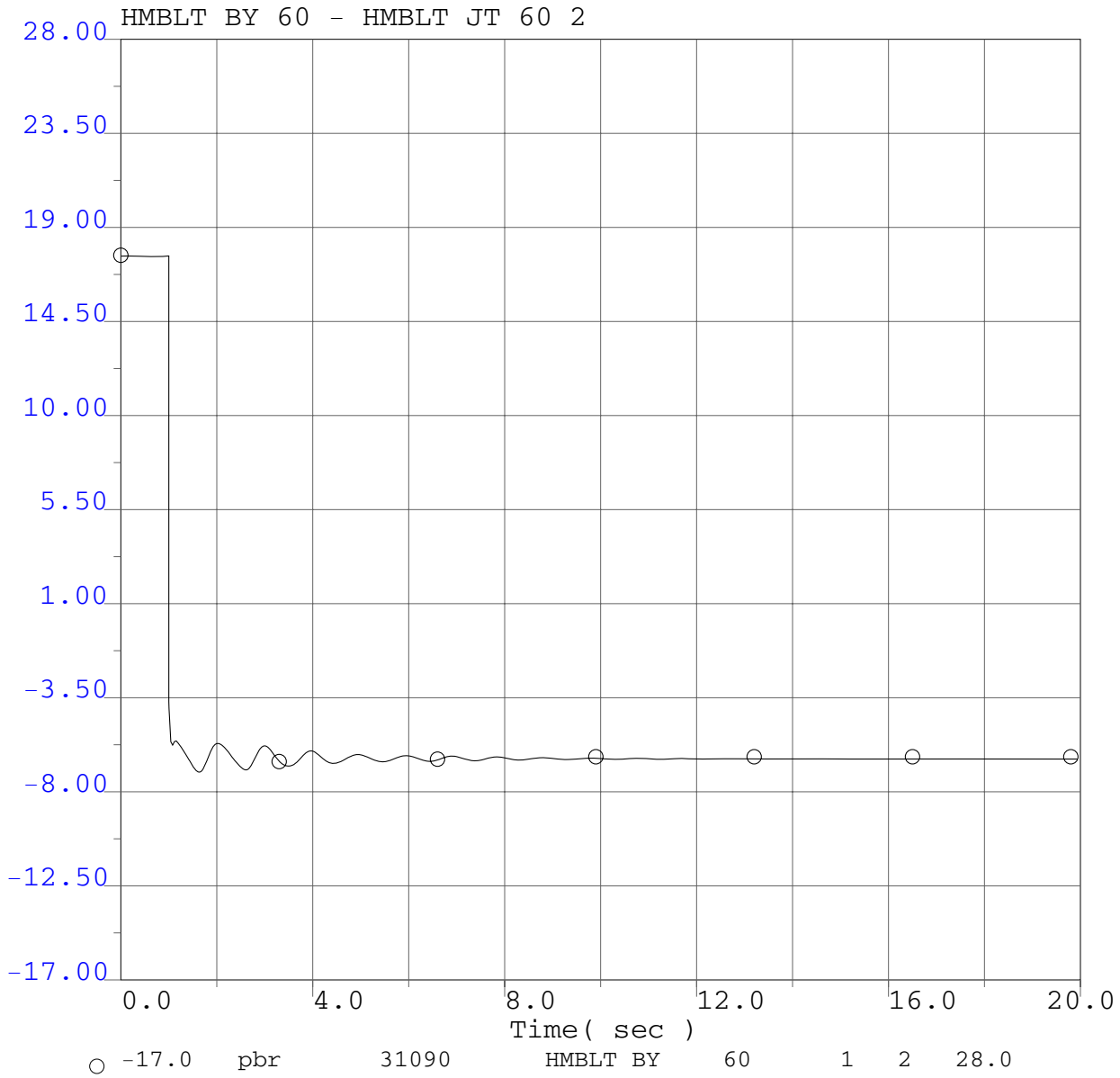

P0411 Project System Impact Study
2008 Winter Peak Base Case
P0411 @ 166.4MW
P0411 Load Rejection
No Fault

P0411 Project System Impact Study

Selected PG&E Transmission Line Flows (MW)

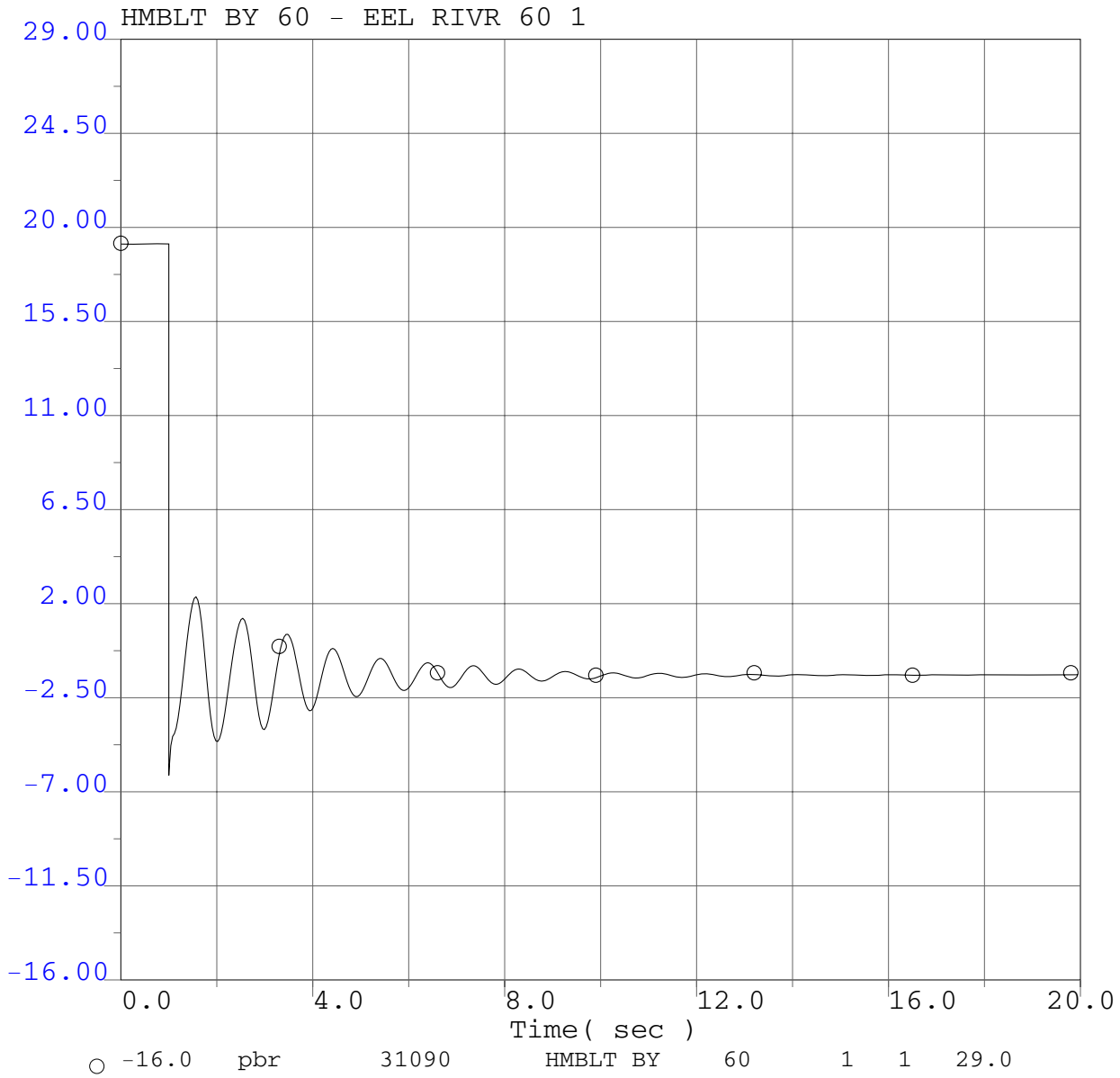

P0411 Project System Impact Study
2008 Winter Peak Base Case
P0411 @ 166.4MW
P0411 Load Rejection
No Fault

P0411 Project System Impact Study

Selected PG&E Transmission Line Flows (MW)

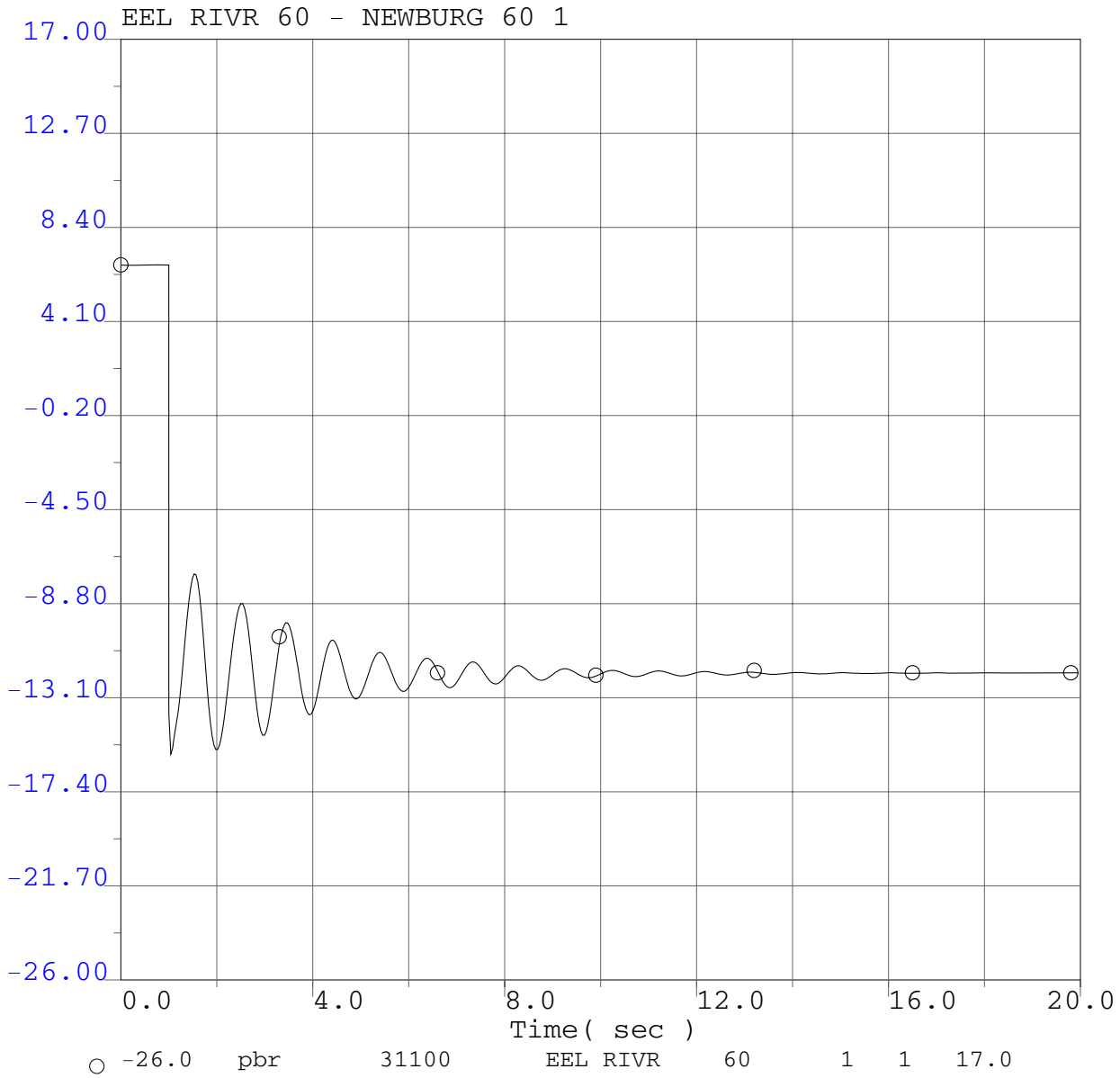

P0411 Project System Impact Study
2008 Winter Peak Base Case
P0411 @ 166.4MW
P0411 Load Rejection
No Fault

P0411 Project System Impact Study

Selected PG&E Transmission Line Flows (MW)

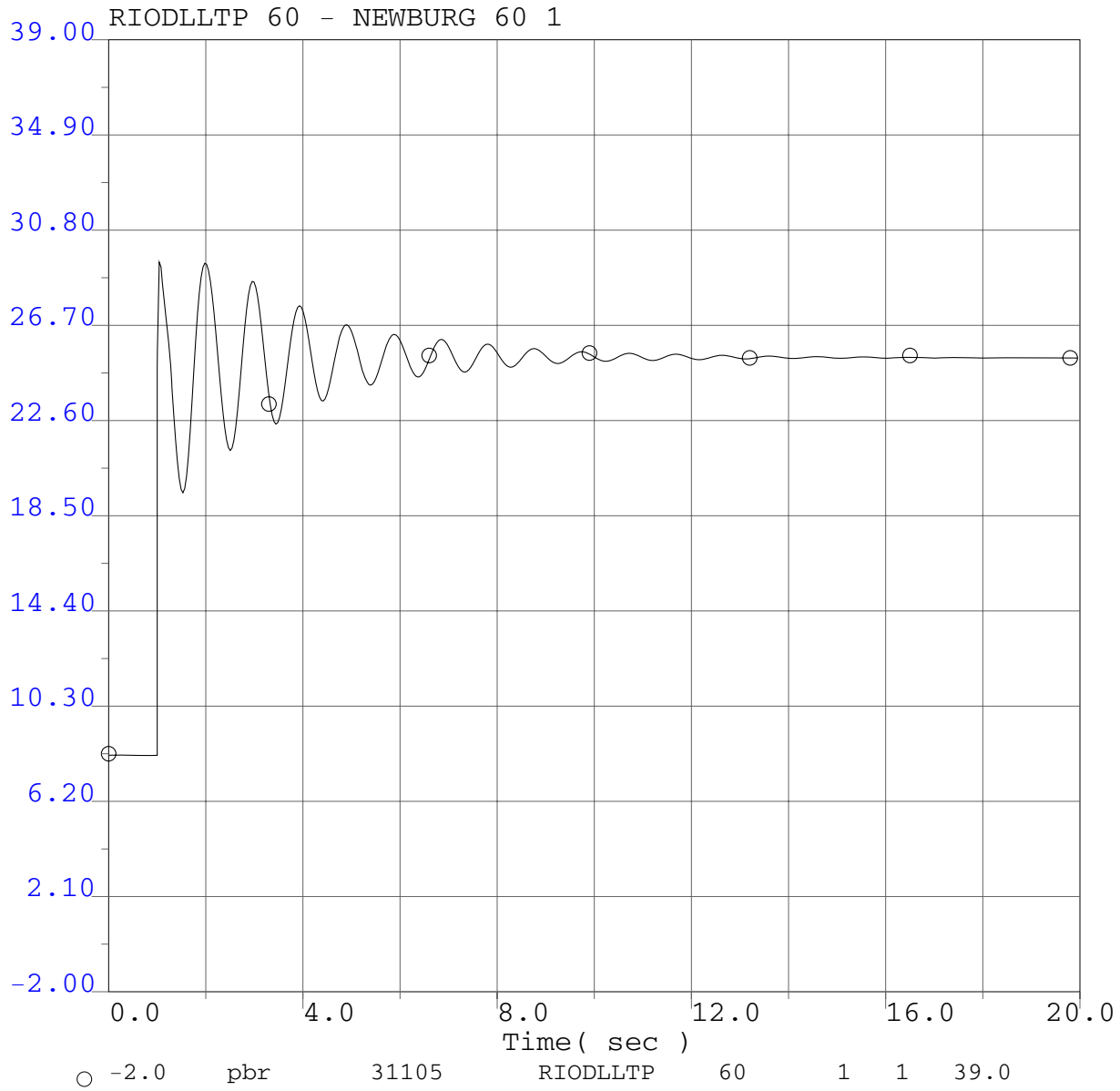

P0411 Project System Impact Study
2008 Winter Peak Base Case
P0411 @ 166.4MW
P0411 Load Rejection
No Fault

P0411 Project System Impact Study

Selected PG&E Transmission Line Flows (MW)

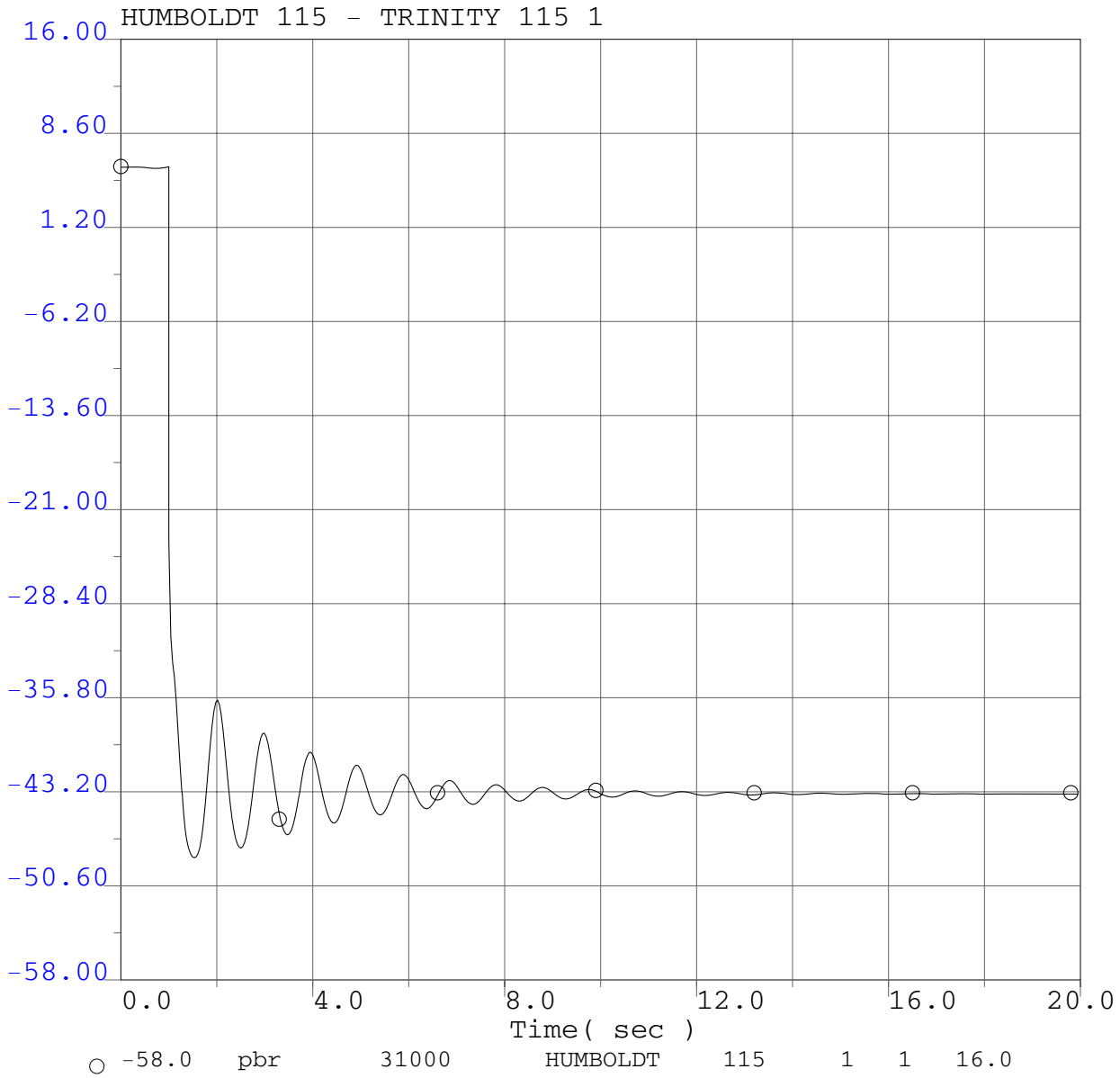

P0411 Project System Impact Study
2008 Winter Peak Base Case
P0411 @ 166.4MW
P0411 Load Rejection
No Fault

P0411 Project System Impact Study

Selected PG&E Transmission Line Flows (MW)

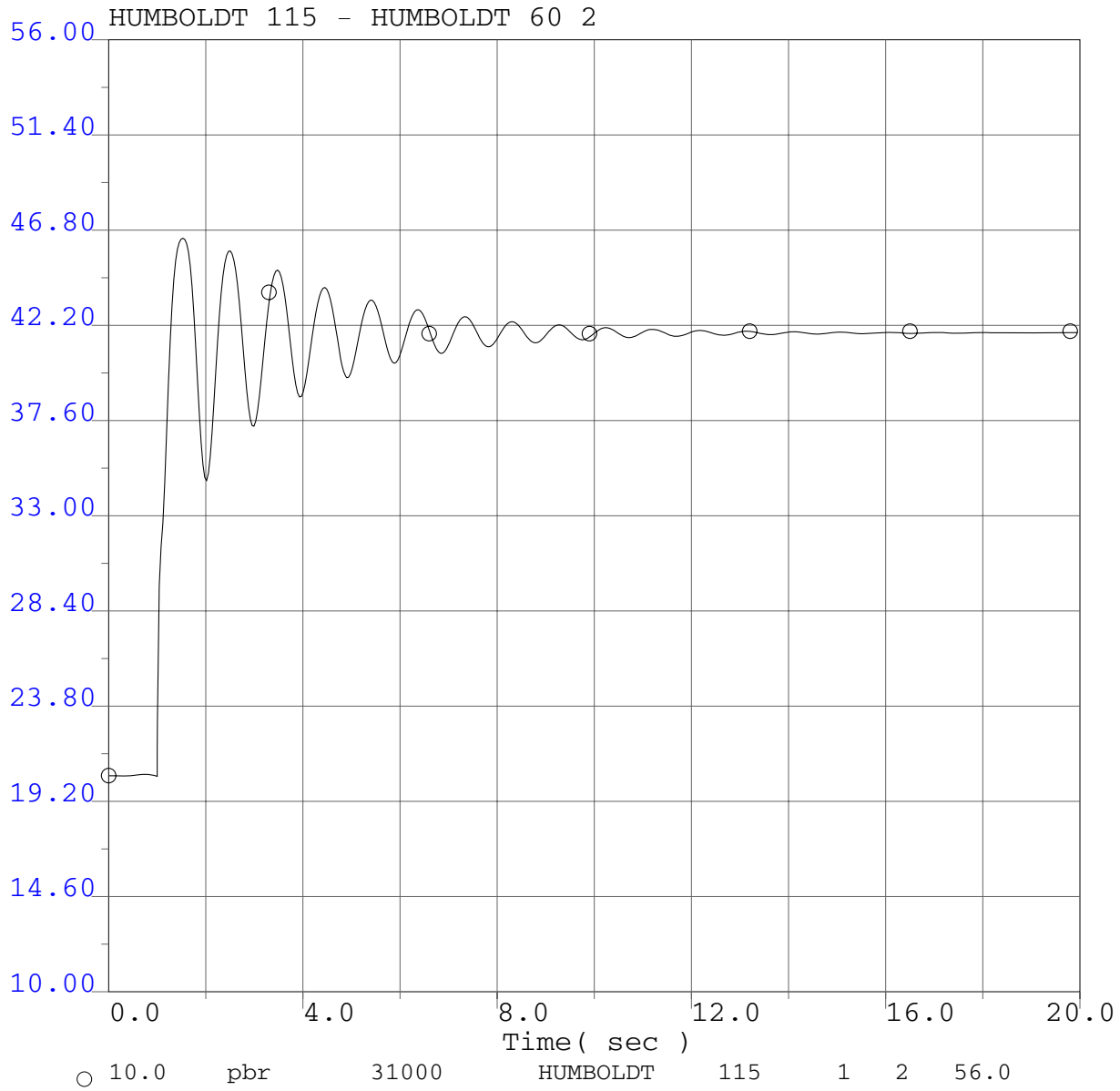

P0411 Project System Impact Study
2008 Winter Peak Base Case
P0411 @ 166.4MW
P0411 Load Rejection
No Fault

P0411 Project System Impact Study

Selected PG&E Transmission Line Flows (MW)

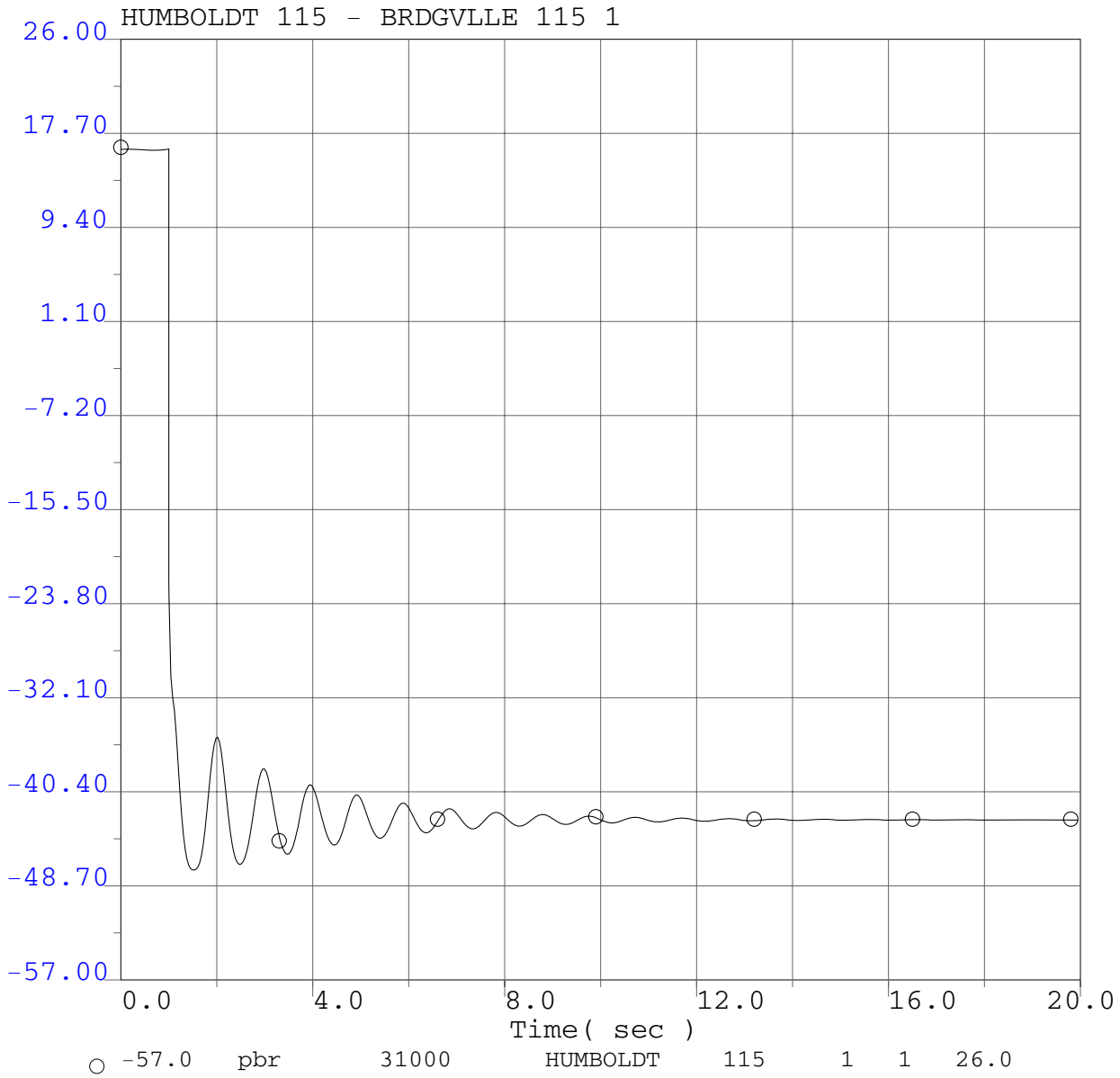

P0411 Project System Impact Study
2008 Winter Peak Base Case
P0411 @ 166.4MW
P0411 Load Rejection
No Fault

P0411 Project System Impact Study

Selected PG&E Transmission Line Flows (MW)

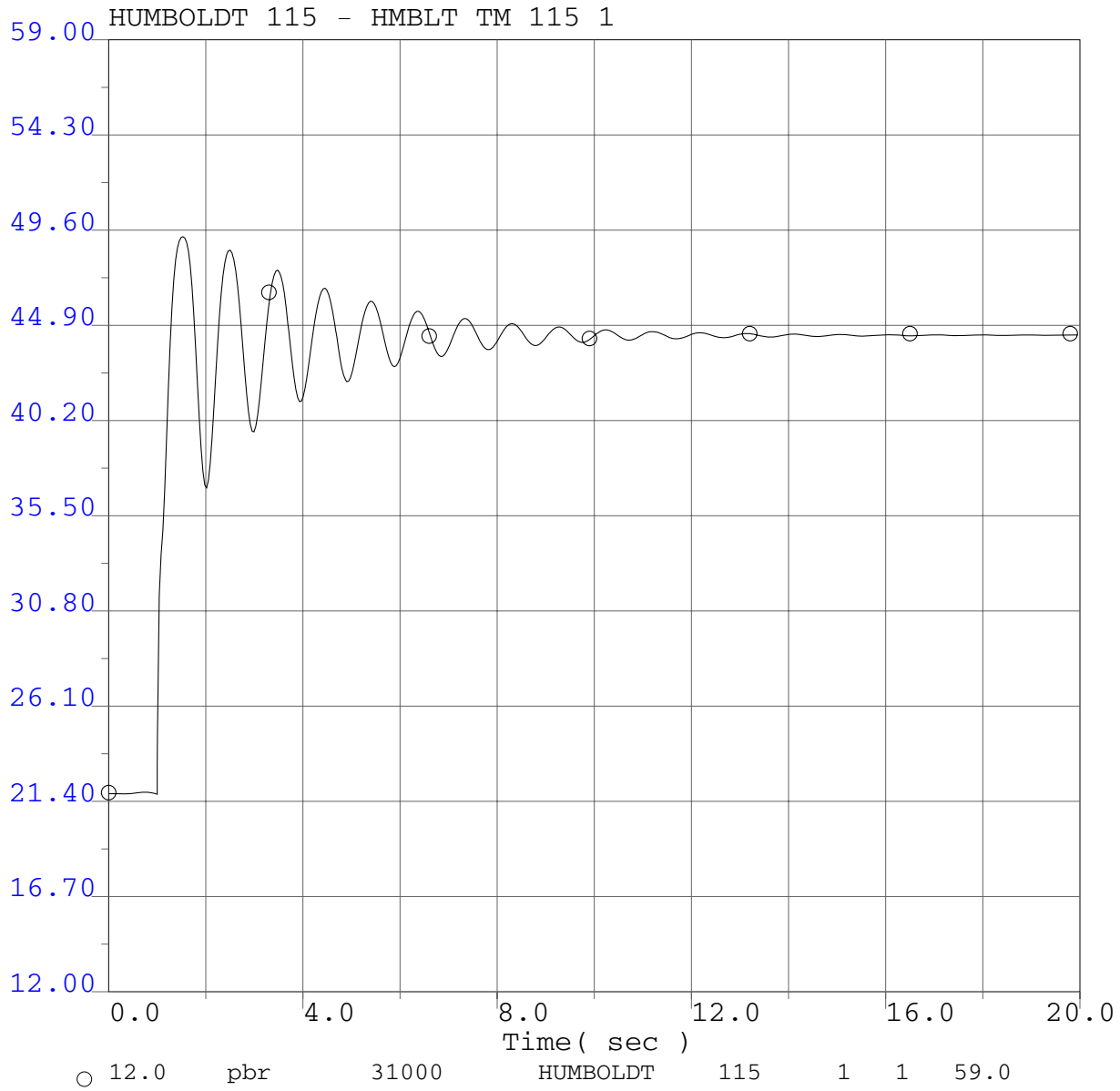

P0411 Project System Impact Study
2008 Winter Peak Base Case
P0411 @ 166.4MW
P0411 Load Rejection
No Fault

P0411 Project System Impact Study

Selected PG&E Bus Voltage Plots Adjacent to Fault

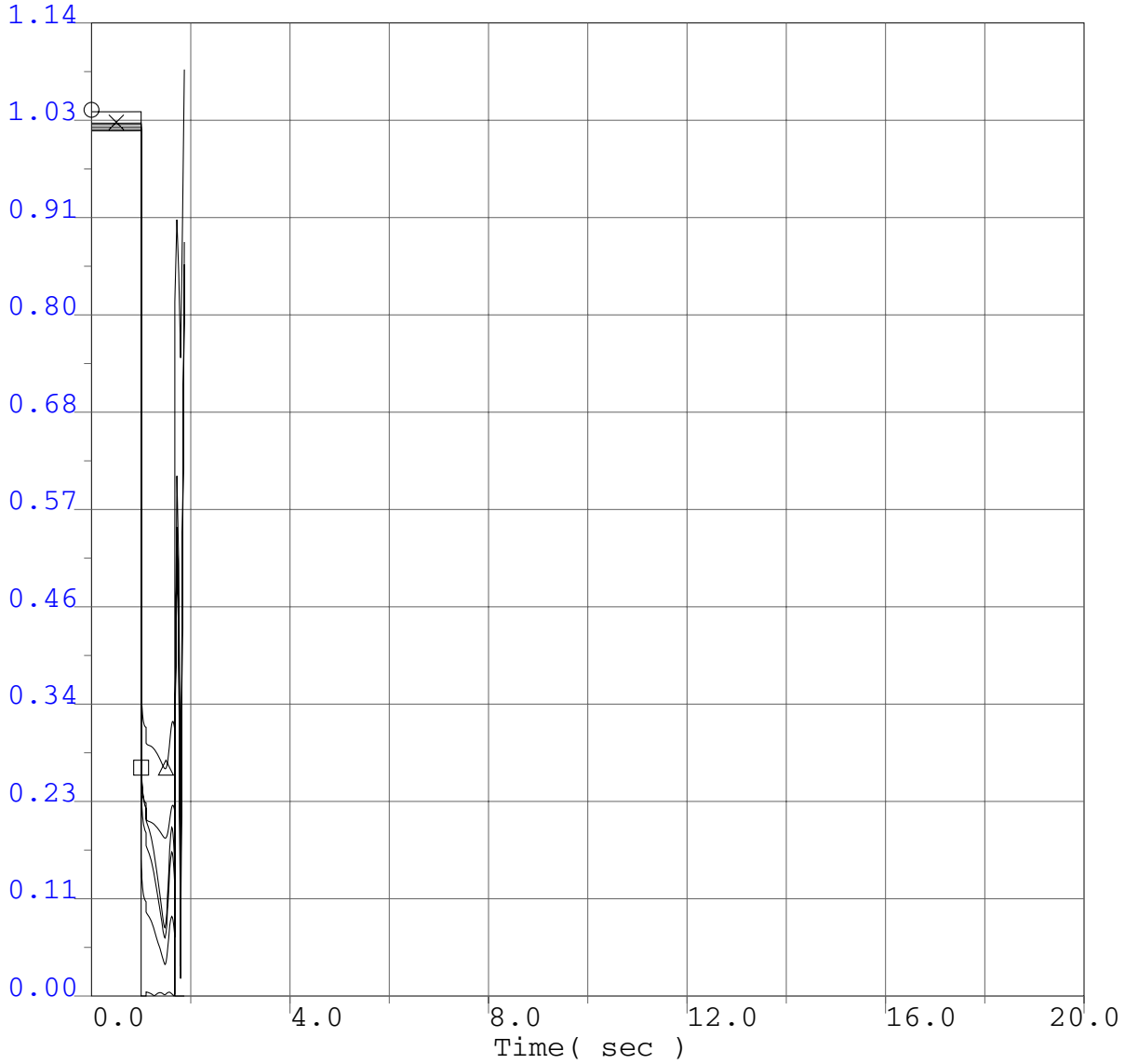

○	0.0	vbul	31090	HMBLT BY	60.0	"*"	1	1.14
×	0.0	vbus	31080	HUMBOLDT	60.0	"*"	1	1.14
□	0.0	vbul	31102	NEWBURG	60.0	"*"	1	1.14
△	0.0	vbus	31105	RIODLLTP	60.0	"*"	1	1.14
◇	0.0	vbul	31086	EUREKA	60.0	"*"	1	1.14
+	0.0	vbul	31082	HARRIS	60.0	"*"	1	1.14

P0411 Project System Impact Study
2008 Winter Peak Base Case
P0411 @ 166.4MW
Humboldt Bay PP - Rio Dell 60kV line outage
3 ph 6 cyc flt @ Humboldt Bay PP 60kV bus & clr HBay-Rio Dell 60kV line @ 40.8

P0411 Project System Impact Study

Selected PG&E Bus Frequency Plots Adjacent to Fault

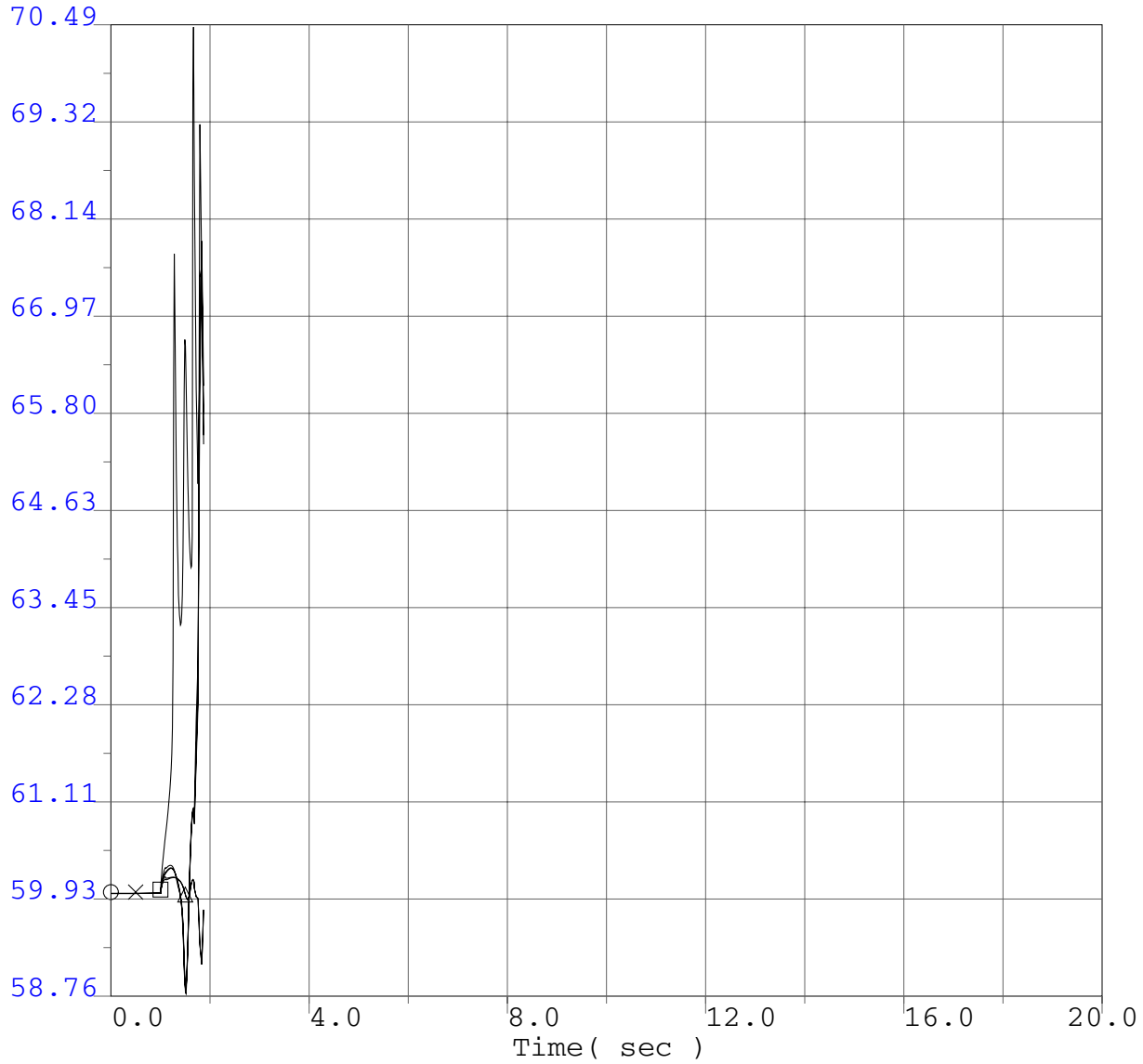

○	58.76	fbul	31090	HMBLT BY	60.0	"*" 1	70.49
×	58.76	fbus	31080	HUMBOLDT	60.0	"*" 1	70.49
□	58.76	fbul	31102	NEWBURG	60.0	"*" 1	70.49
△	58.76	fbus	31105	RIODLLTP	60.0	"*" 1	70.49
◇	58.76	fbul	31086	EUREKA	60.0	"*" 1	70.49
+	58.76	fbul	31082	HARRIS	60.0	"*" 1	70.49

P0411 Project System Impact Study
2008 Winter Peak Base Case
P0411 @ 166.4MW
Humboldt Bay PP - Rio Dell 60kV line outage
3 ph 6 cyc flt @ Humboldt Bay PP 60kV bus & clr HBay-Rio Dell 60kV line @ 40.8

P0411 Project System Impact Study

Project Generator Terminal Voltages

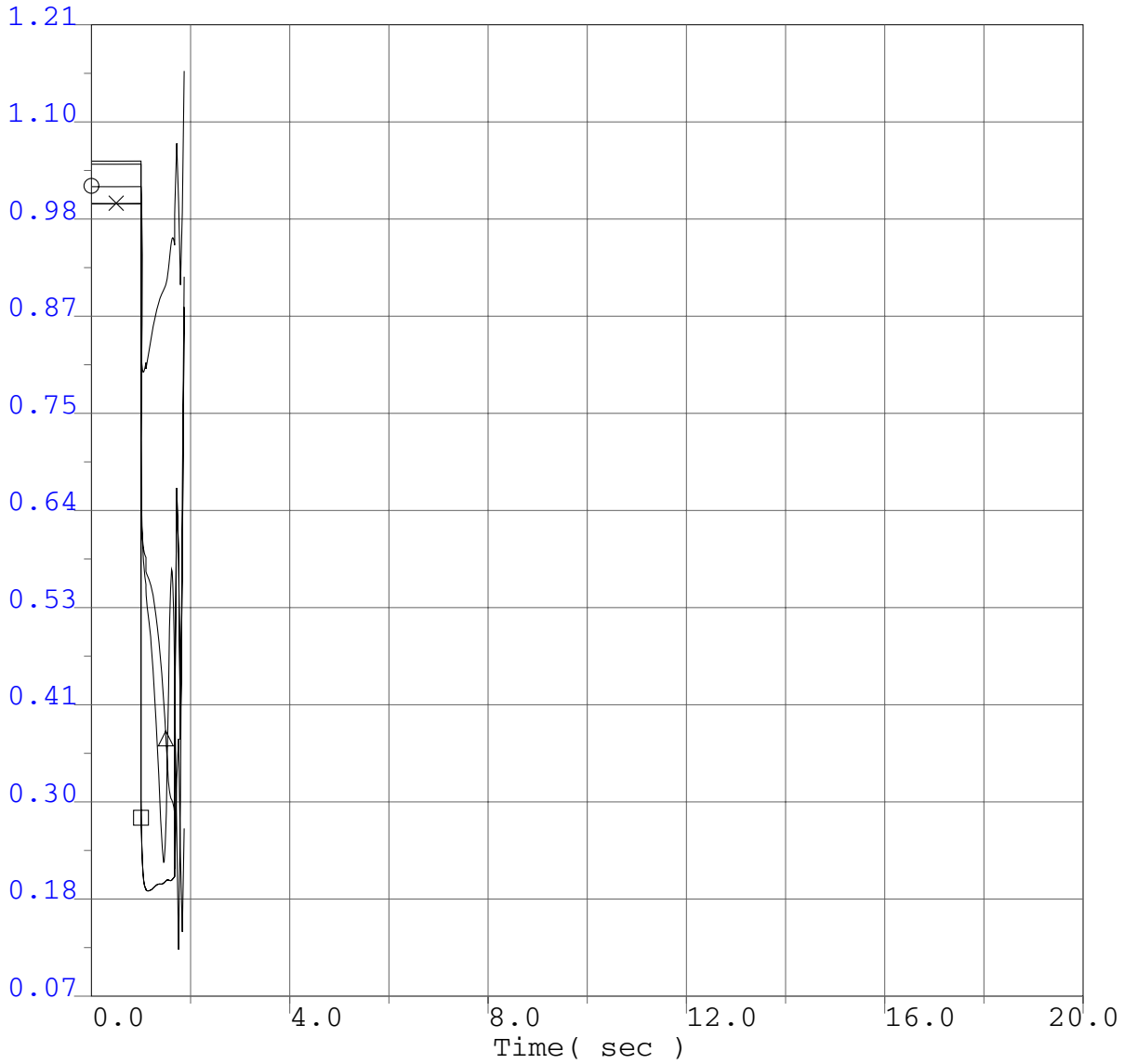

○	0.07	vt	31180	P0411G1	13.8	"1" 1	1.21
×	0.07	vt	31181	P0411G2	13.8	"5" 1	1.21
□	0.07	vt	31182	P0411G3	13.8	"8" 1	1.21
△	0.07	vt	31150	FAIRHAVN	13.8	"1" 1	1.21
◇	0.07	vt	31158	LP SAMOA	12.5	"1" 1	1.21

P0411 Project System Impact Study
2008 Winter Peak Base Case
P0411 @ 166.4MW
Humboldt Bay PP - Rio Dell 60kV line outage
3 ph 6 cyc flt @ Humboldt Bay PP 60kV bus & clr HBay-Rio Dell 60kV line @ 40.8

P0411 Project System Impact Study

Project Generator Rotor Speed

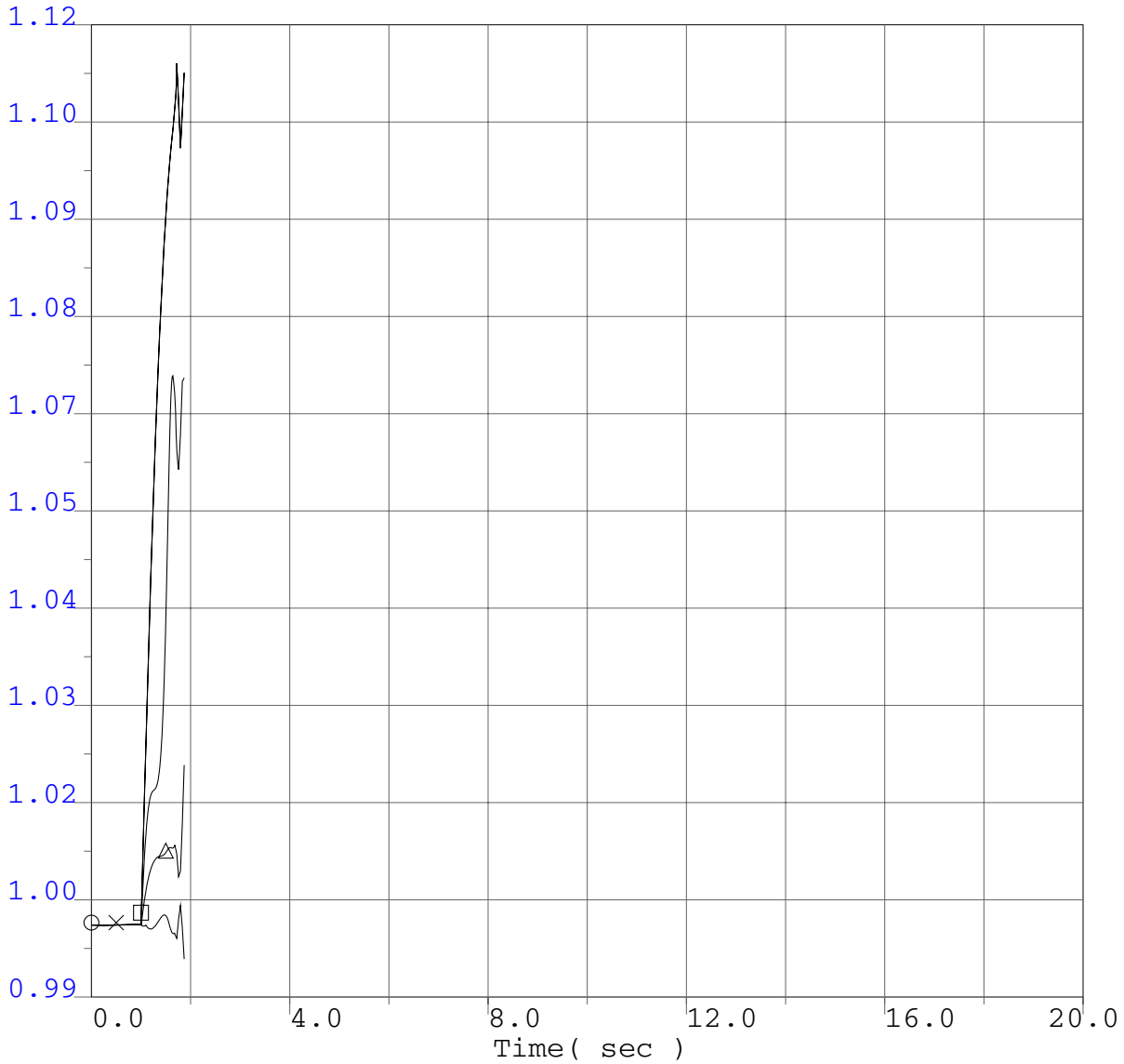

○	0.9906	spd	31180	P0411G1	13.8	"1"	1	1.1175
×	0.9906	spd	31181	P0411G2	13.8	"5"	1	1.1175
□	0.9906	spd	31182	P0411G3	13.8	"8"	1	1.1175
△	0.9906	spd	31150	FAIRHAVN	13.8	"1"	1	1.1175
◇	0.9906	spd	31158	LP SAMOA	12.5	"1"	1	1.1175

P0411 Project System Impact Study
2008 Winter Peak Base Case
P0411 @ 166.4MW
Humboldt Bay PP - Rio Dell 60kV line outage
3 ph 6 cyc flt @ Humboldt Bay PP 60kV bus & clr HBay-Rio Dell 60kV line @ 40.8

P0411 Project System Impact Study

Project Generator Terminal Power

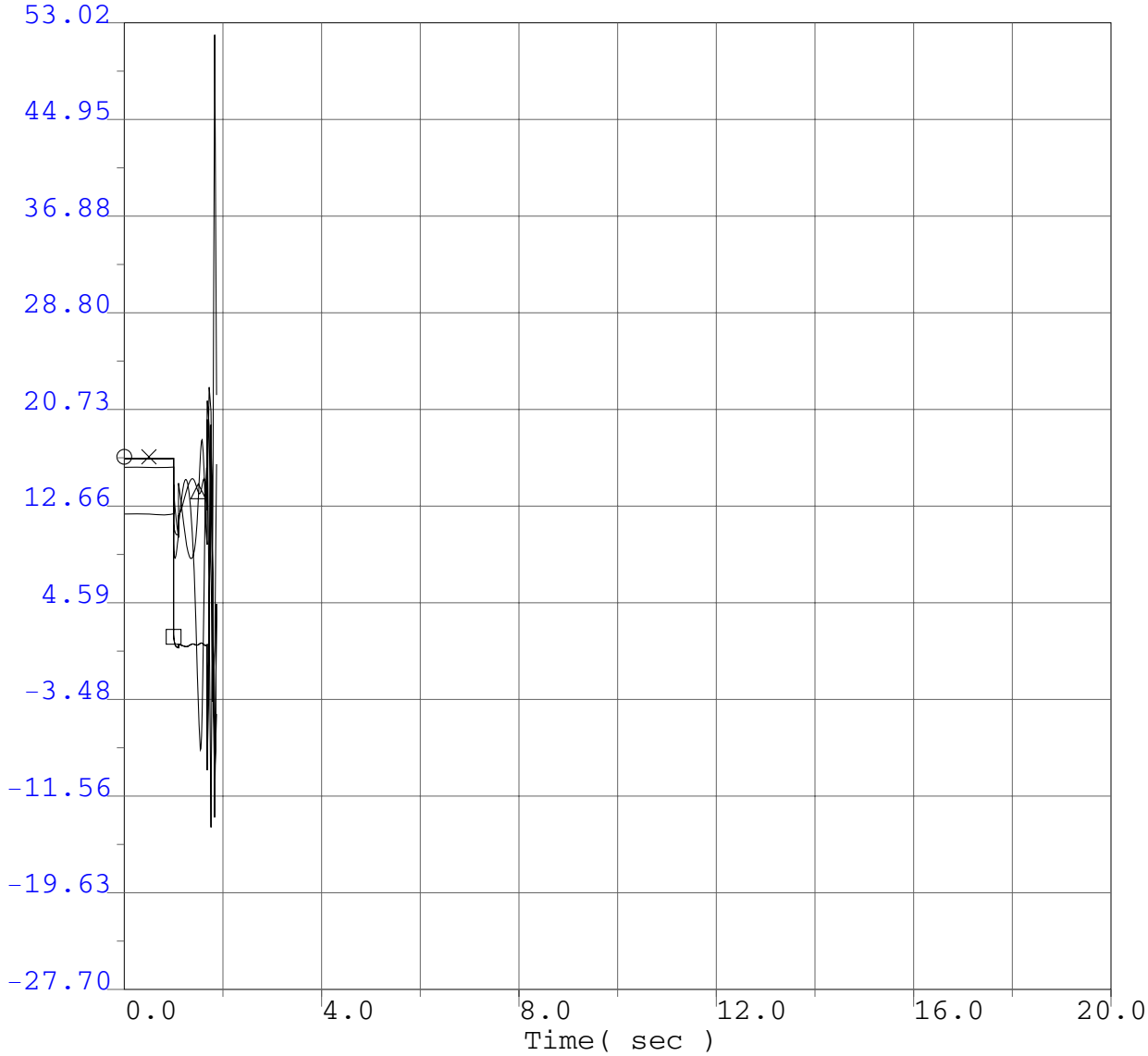

○	-27.7	pg	31180	P0411G1	13.8	"1"	1	53.02
×	-27.7	pg	31181	P0411G2	13.8	"5"	1	53.02
□	-27.7	pg	31182	P0411G3	13.8	"8"	1	53.02
△	-27.7	pg	31150	FAIRHAVN	13.8	"1"	1	53.02
◇	-27.7	pg	31158	LP SAMOA	12.5	"1"	1	53.02

P0411 Project System Impact Study
2008 Winter Peak Base Case
P0411 @ 166.4MW
Humboldt Bay PP - Rio Dell 60kV line outage
3 ph 6 cyc flt @ Humboldt Bay PP 60kV bus & clr HBay-Rio Dell 60kV line @ 40.8

P0411 Project System Impact Study

Project Generator Terminal Reactive Power

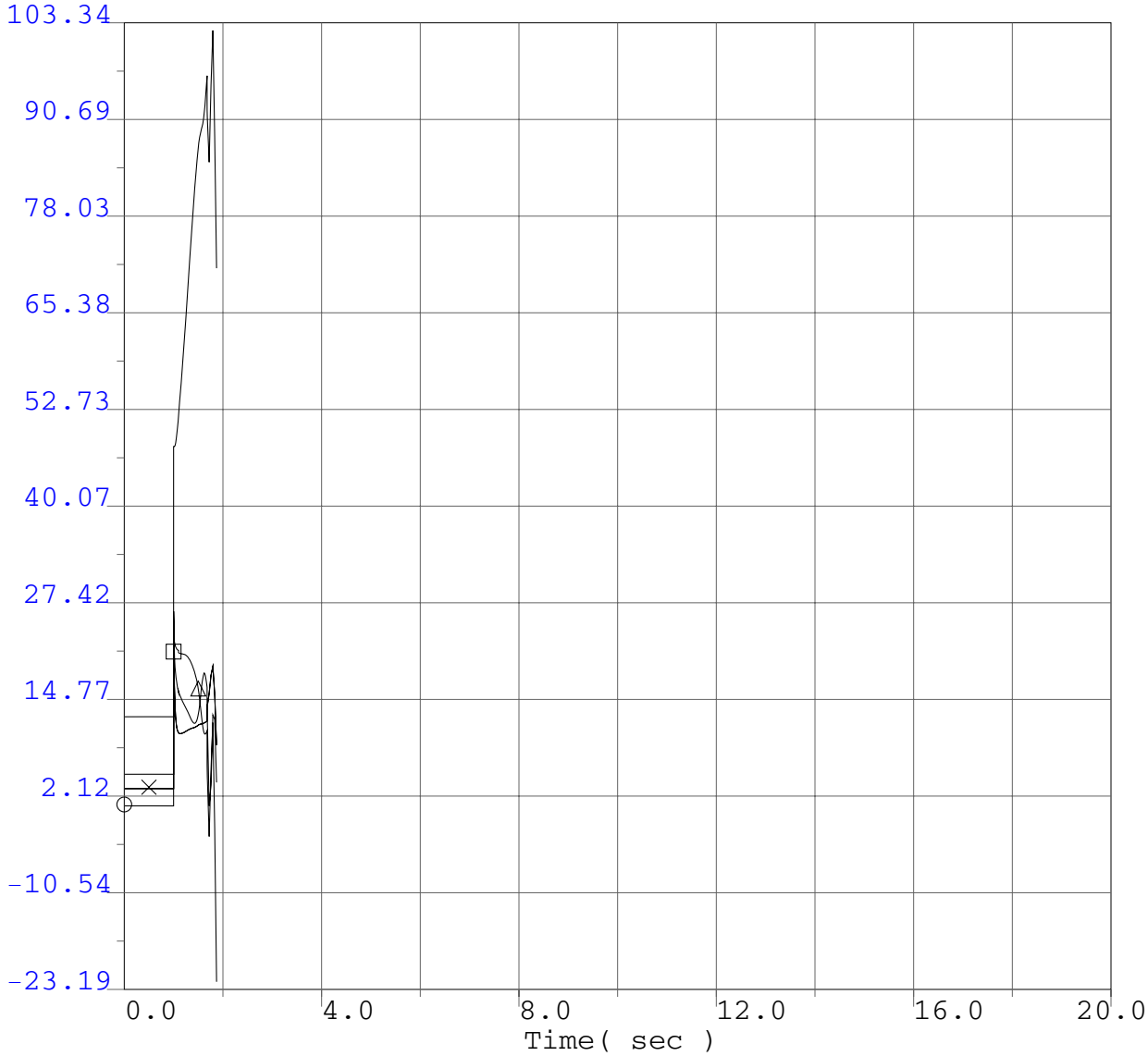

○	-23.19	qg	31180	P0411G1	13.8	"1"	1	103.34
×	-23.19	qg	31181	P0411G2	13.8	"5"	1	103.34
□	-23.19	qg	31182	P0411G3	13.8	"8"	1	103.34
△	-23.19	qg	31150	FAIRHAVN	13.8	"1"	1	103.34
◇	-23.19	qg	31158	LP SAMOA	12.5	"1"	1	103.34

P0411 Project System Impact Study
2008 Winter Peak Base Case
P0411 @ 166.4MW
Humboldt Bay PP - Rio Dell 60kV line outage
3 ph 6 cyc flt @ Humboldt Bay PP 60kV bus & clr HBay-Rio Dell 60kV line @ 40.8

P0411 Project System Impact Study

Selected WECC Bus Voltage Plots

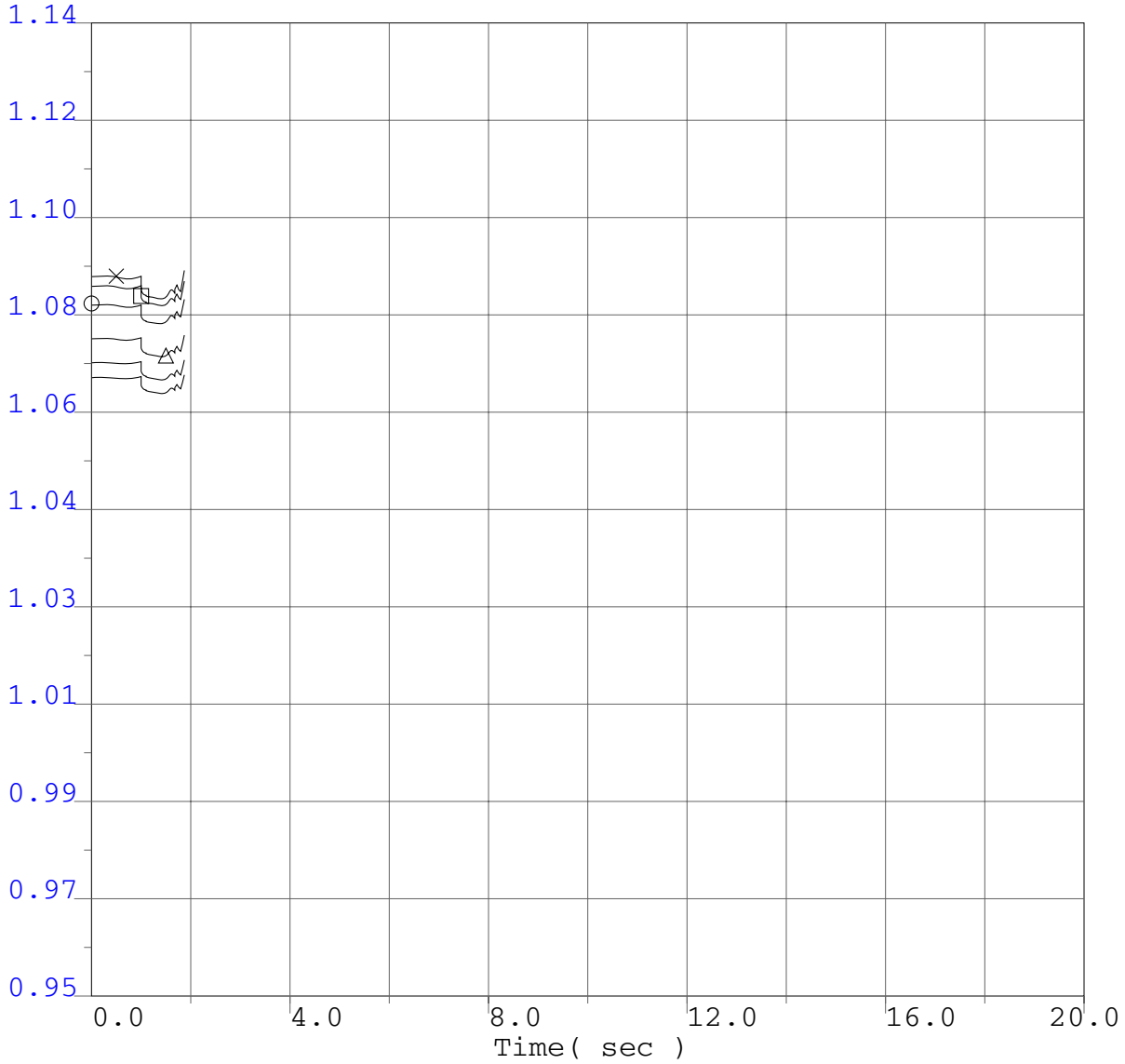

○ 0.95	vbus	40687	MALIN	500.0	"*" 1	1.14
× 0.95	vbus	30005	ROUND MT	500.0	"*" 1	1.14
□ 0.95	vbus	30015	TABLE MT	500.0	"*" 1	1.14
△ 0.95	vbus	30030	VACA-DIX	500.0	"*" 1	1.14
◇ 0.95	vbus	30040	TESLA	500.0	"*" 1	1.14
+ 0.95	vbus	30035	TRACY	500.0	"*" 1	1.14

P0411 Project System Impact Study
2008 Winter Peak Base Case
P0411 @ 166.4MW
Humboldt Bay PP - Rio Dell 60kV line outage
3 ph 6 cyc flt @ Humboldt Bay PP 60kV bus & clr HBay-Rio Dell 60kV line @ 40.8

P0411 Project System Impact Study

Selected WECC Bus Voltage Plots

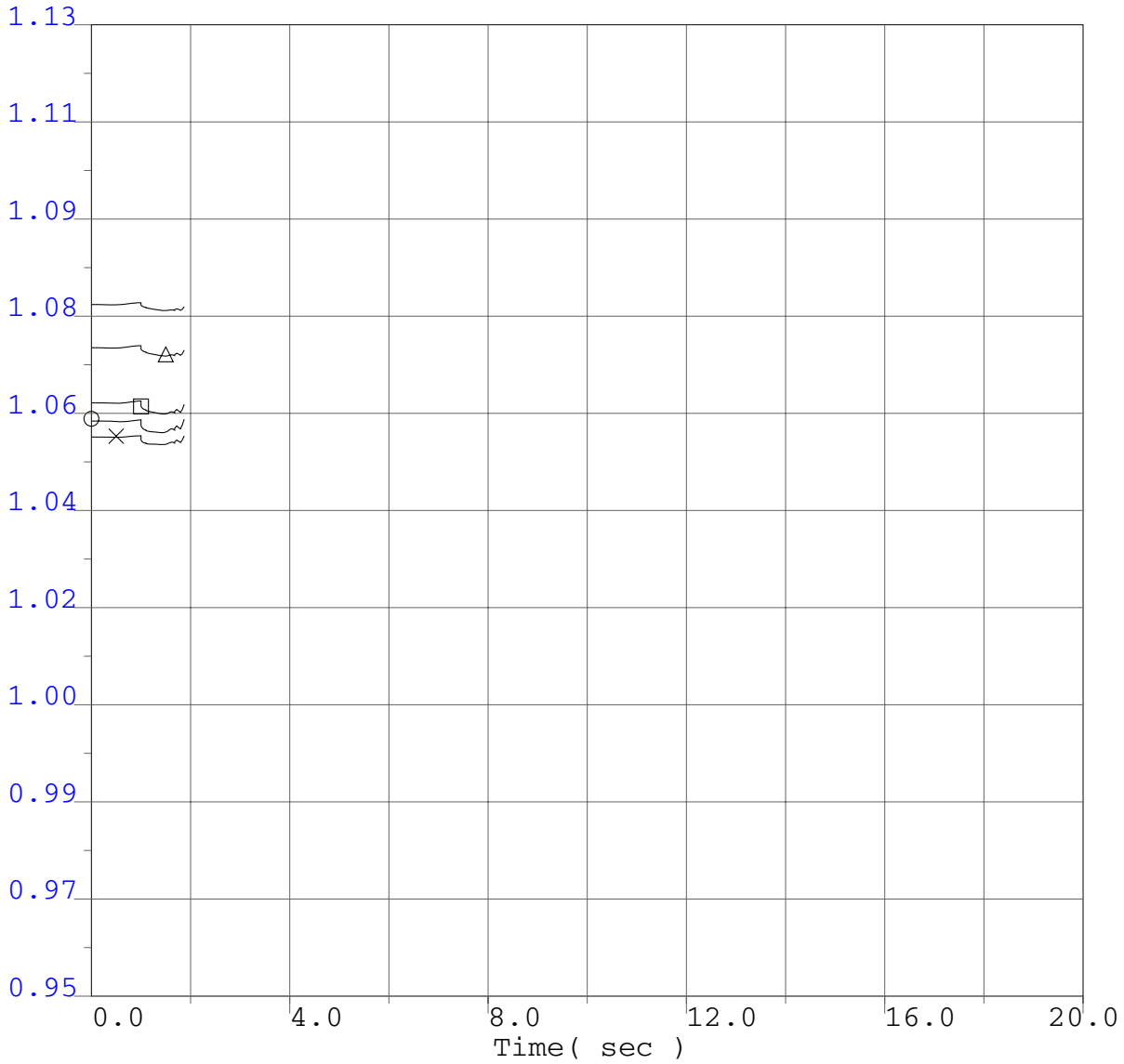

○ 0.95	vbus	30042	METCALF	500.0	"*"	1	1.13
× 0.95	vbus	30045	MOSSLAND	500.0	"*"	1	1.13
□ 0.95	vbus	30050	LOSBANOS	500.0	"*"	1	1.13
△ 0.95	vbus	30055	GATES	500.0	"*"	1	1.13
◇ 0.95	vbus	30060	MIDWAY	500.0	"*"	1	1.13

P0411 Project System Impact Study
2008 Winter Peak Base Case
P0411 @ 166.4MW
Humboldt Bay PP - Rio Dell 60kV line outage
3 ph 6 cyc flt @ Humboldt Bay PP 60kV bus & clr HBay-Rio Dell 60kV line @ 40.8

P0411 Project System Impact Study

Selected WECC Bus Voltage Plots

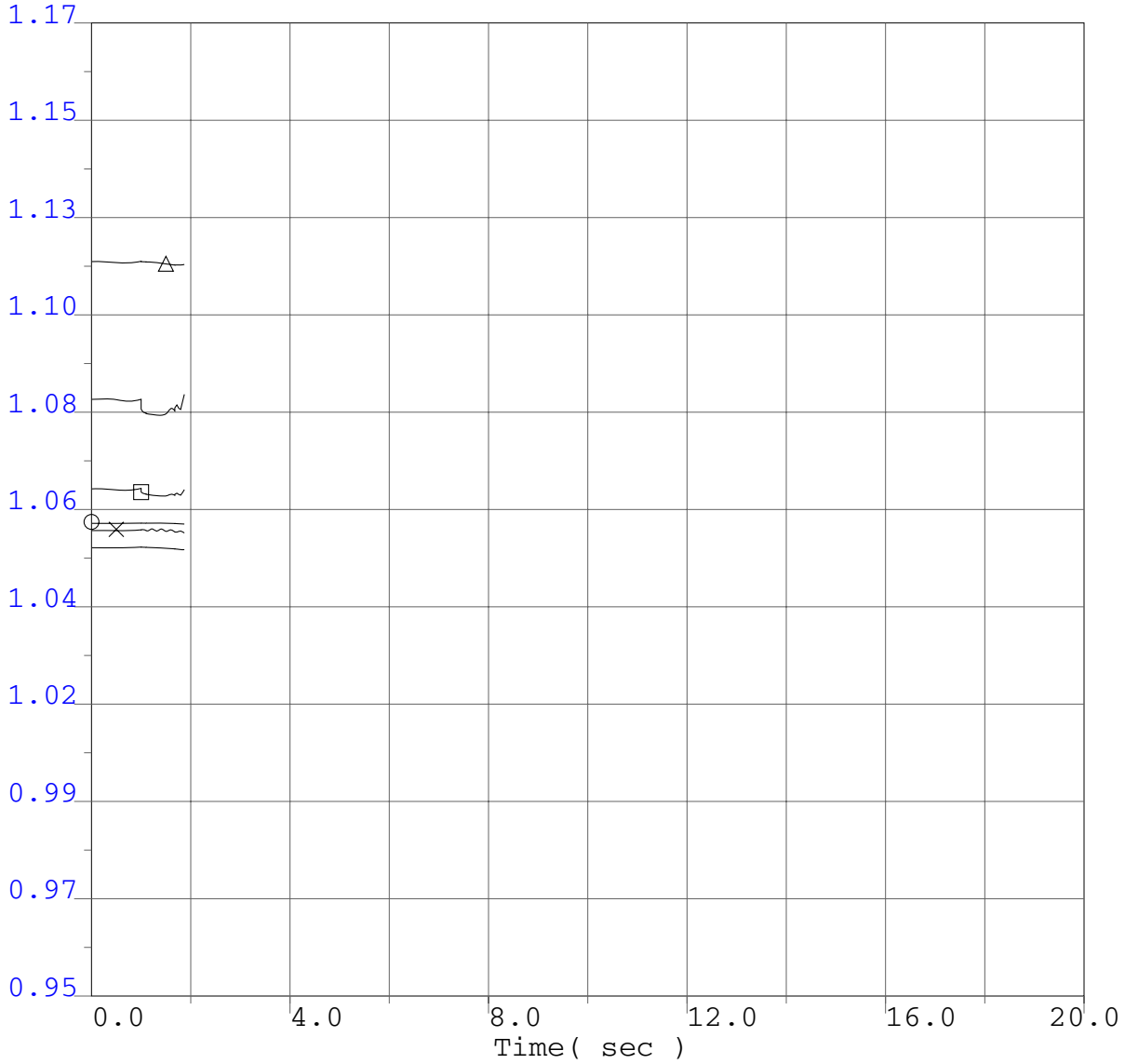

○	0.95	vbus	14001	FOURCORN	500.0	"*"	1	1.17
×	0.95	vbus	50703	NIC500	500.0	"*"	1	1.17
□	0.95	vbus	60240	MIDPOINT	500.0	"*"	1	1.17
△	0.95	vbus	62012	TOWN2	500.0	"*"	1	1.17
◇	0.95	vbus	40687	MALIN	500.0	"*"	1	1.17
+	0.95	vbus	66340	SIGURD	345.0	"*"	1	1.17

P0411 Project System Impact Study
2008 Winter Peak Base Case
P0411 @ 166.4MW
Humboldt Bay PP - Rio Dell 60kV line outage
3 ph 6 cyc flt @ Humboldt Bay PP 60kV bus & clr HBay-Rio Dell 60kV line @ 40.8

P0411 Project System Impact Study

Selected WECC Bus Voltage Plots

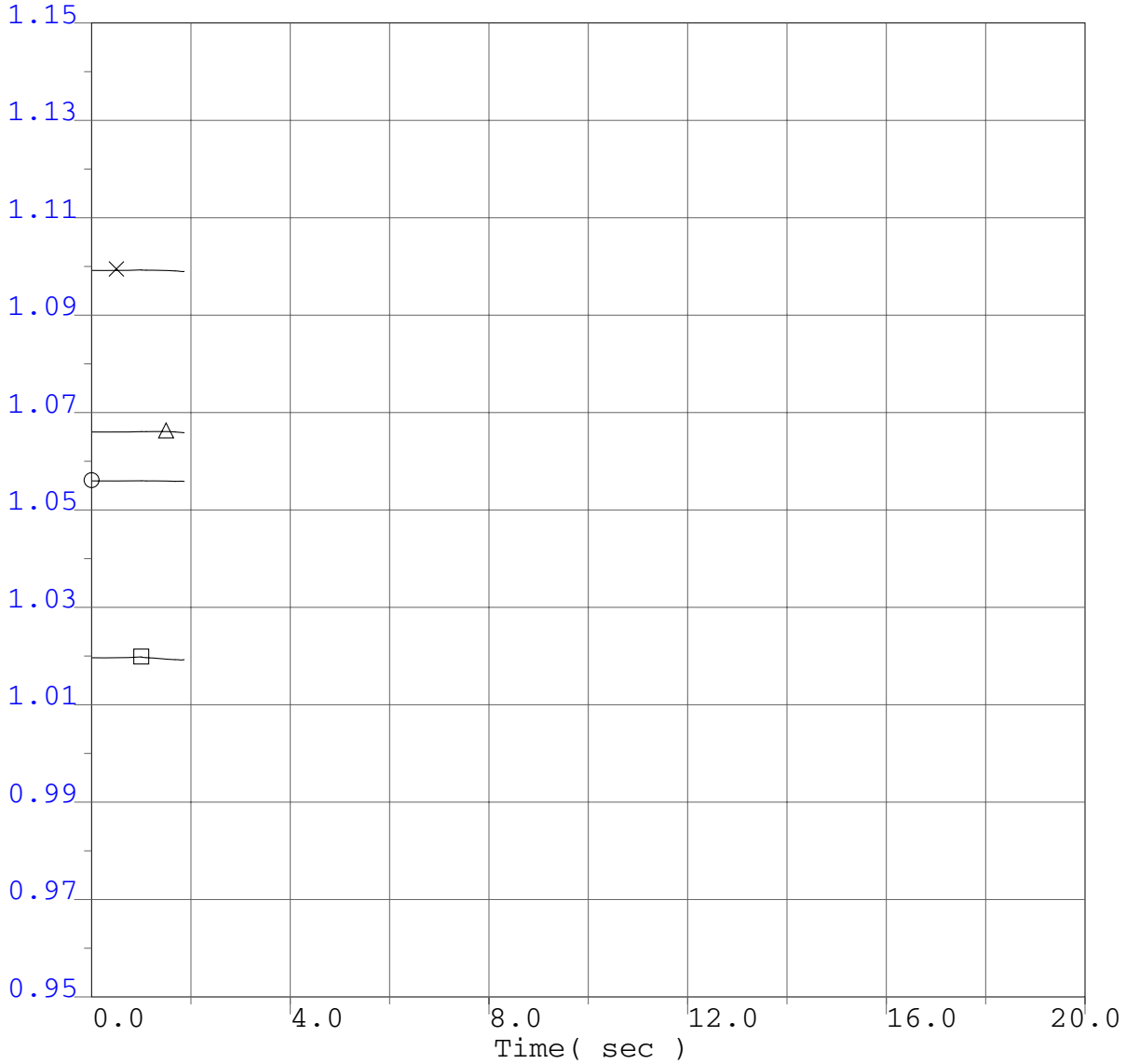

○ 0.95	vbus	54150	LANGDON2	500.0	"*"	1	1.15
× 0.95	vbus	14003	NAVAJO	500.0	"*"	1	1.15
□ 0.95	vbus	24153	VESTAL	230.0	"*"	1	1.15
△ 0.95	vbus	22360	IMPRLVLY	500.0	"*"	1	1.15

P0411 Project System Impact Study
2008 Winter Peak Base Case
P0411 @ 166.4MW
Humboldt Bay PP - Rio Dell 60kV line outage
3 ph 6 cyc flt @ Humboldt Bay PP 60kV bus & clr HBay-Rio Dell 60kV line @ 40.8

P0411 Project System Impact Study

Selected WECC Bus Frequency Plots

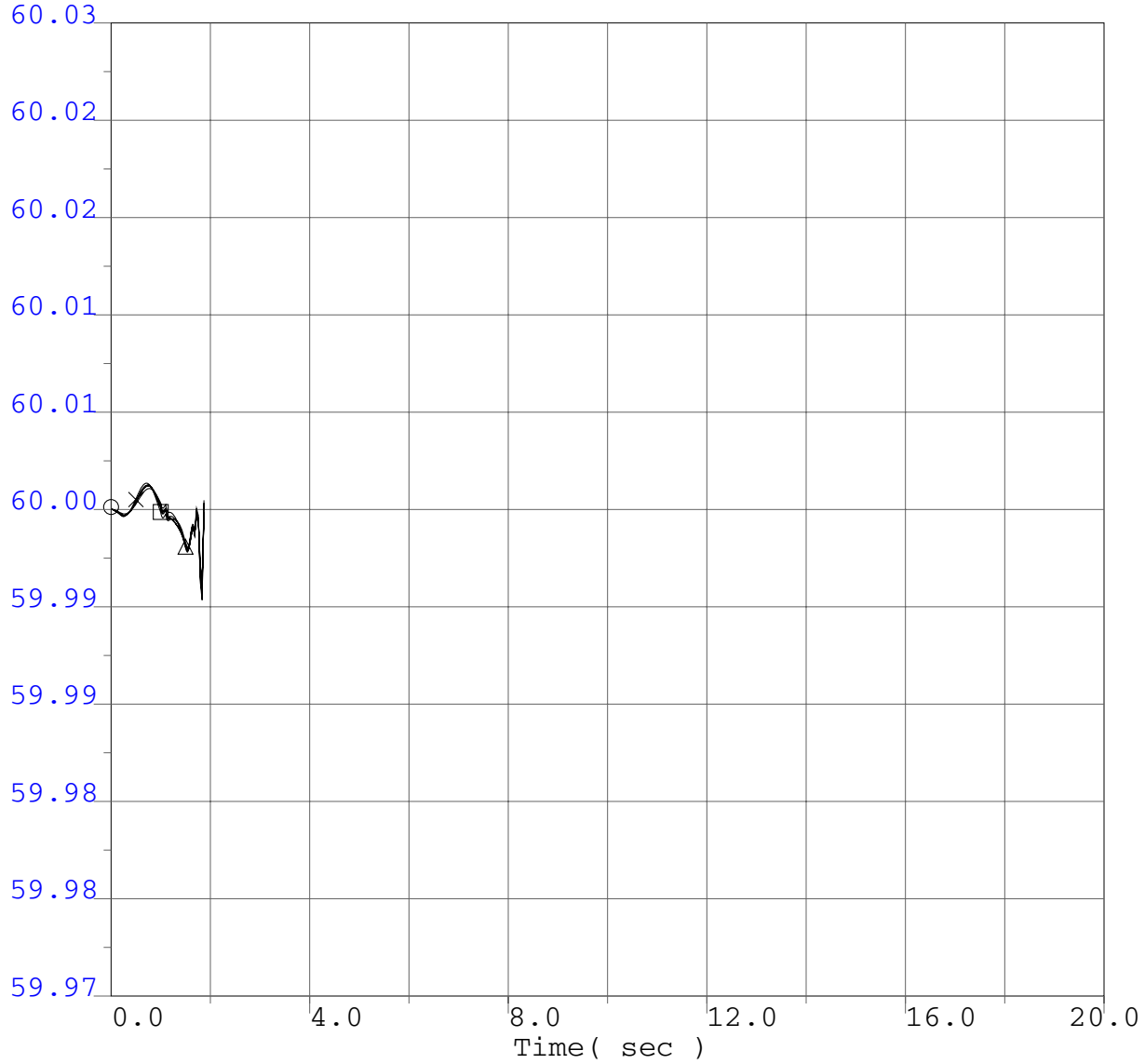

○	59.97	fbus	40687	MALIN	500.0	"*" 1	60.03
×	59.97	fbus	30005	ROUND MT	500.0	"*" 1	60.03
□	59.97	fbus	30015	TABLE MT	500.0	"*" 1	60.03
△	59.97	fbus	30030	VACA-DIX	500.0	"*" 1	60.03
◇	59.97	fbus	30040	TESLA	500.0	"*" 1	60.03
+	59.97	fbus	30035	TRACY	500.0	"*" 1	60.03

P0411 Project System Impact Study
2008 Winter Peak Base Case
P0411 @ 166.4MW
Humboldt Bay PP - Rio Dell 60kV line outage
3 ph 6 cyc flt @ Humboldt Bay PP 60kV bus & clr HBay-Rio Dell 60kV line @ 40.8

P0411 Project System Impact Study

Selected WECC Bus Frequency Plots

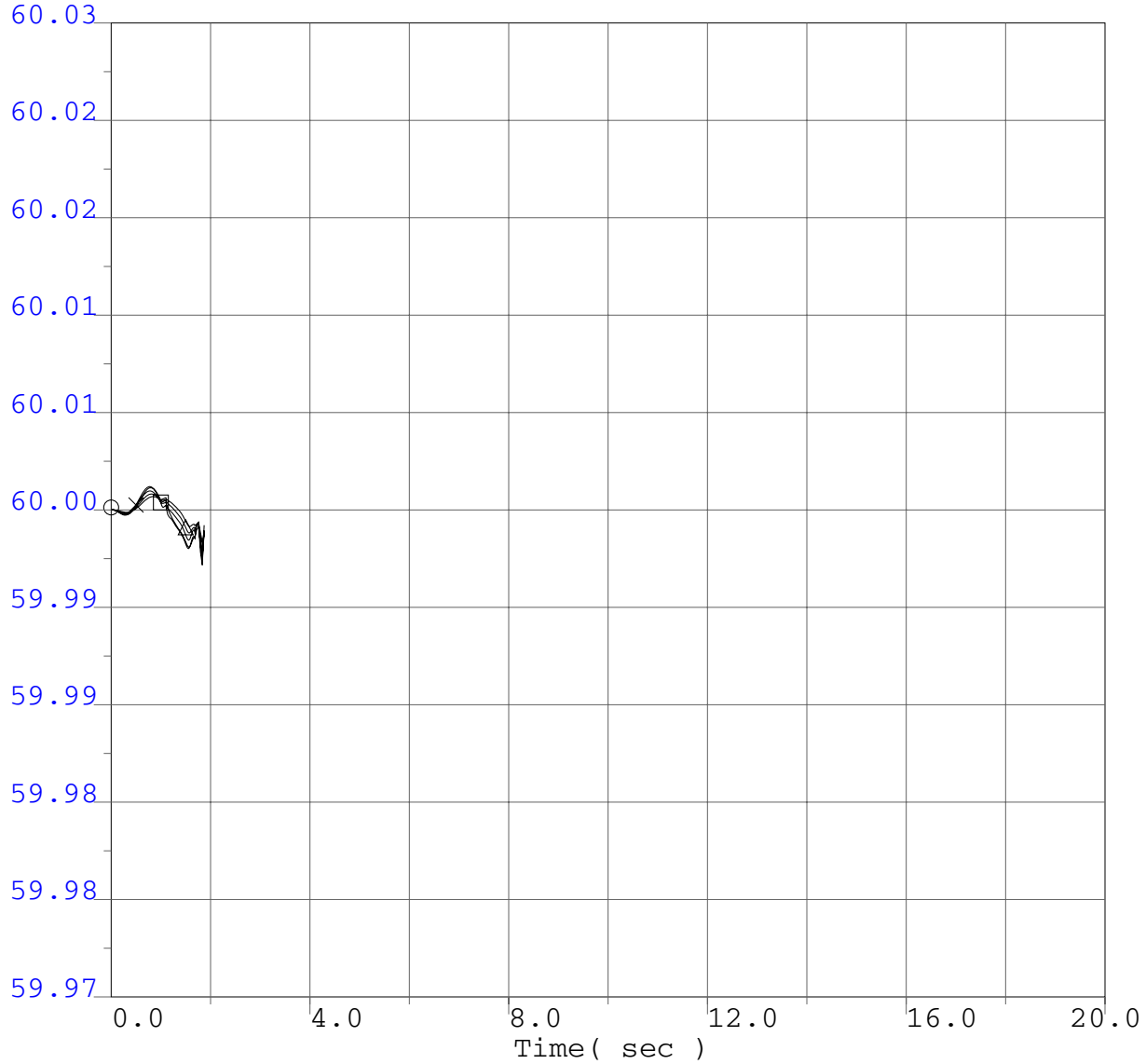

○ 59.97	fbus	30042	METCALF	500.0	"*"	1	60.03
× 59.97	fbus	30045	MOSSLAND	500.0	"*"	1	60.03
□ 59.97	fbus	30050	LOSBANOS	500.0	"*"	1	60.03
△ 59.97	fbus	30055	GATES	500.0	"*"	1	60.03
◇ 59.97	fbus	30060	MIDWAY	500.0	"*"	1	60.03

P0411 Project System Impact Study
2008 Winter Peak Base Case
P0411 @ 166.4MW
Humboldt Bay PP - Rio Dell 60kV line outage
3 ph 6 cyc flt @ Humboldt Bay PP 60kV bus & clr HBay-Rio Dell 60kV line @ 40.8

P0411 Project System Impact Study

Selected WECC Bus Frequency Plots

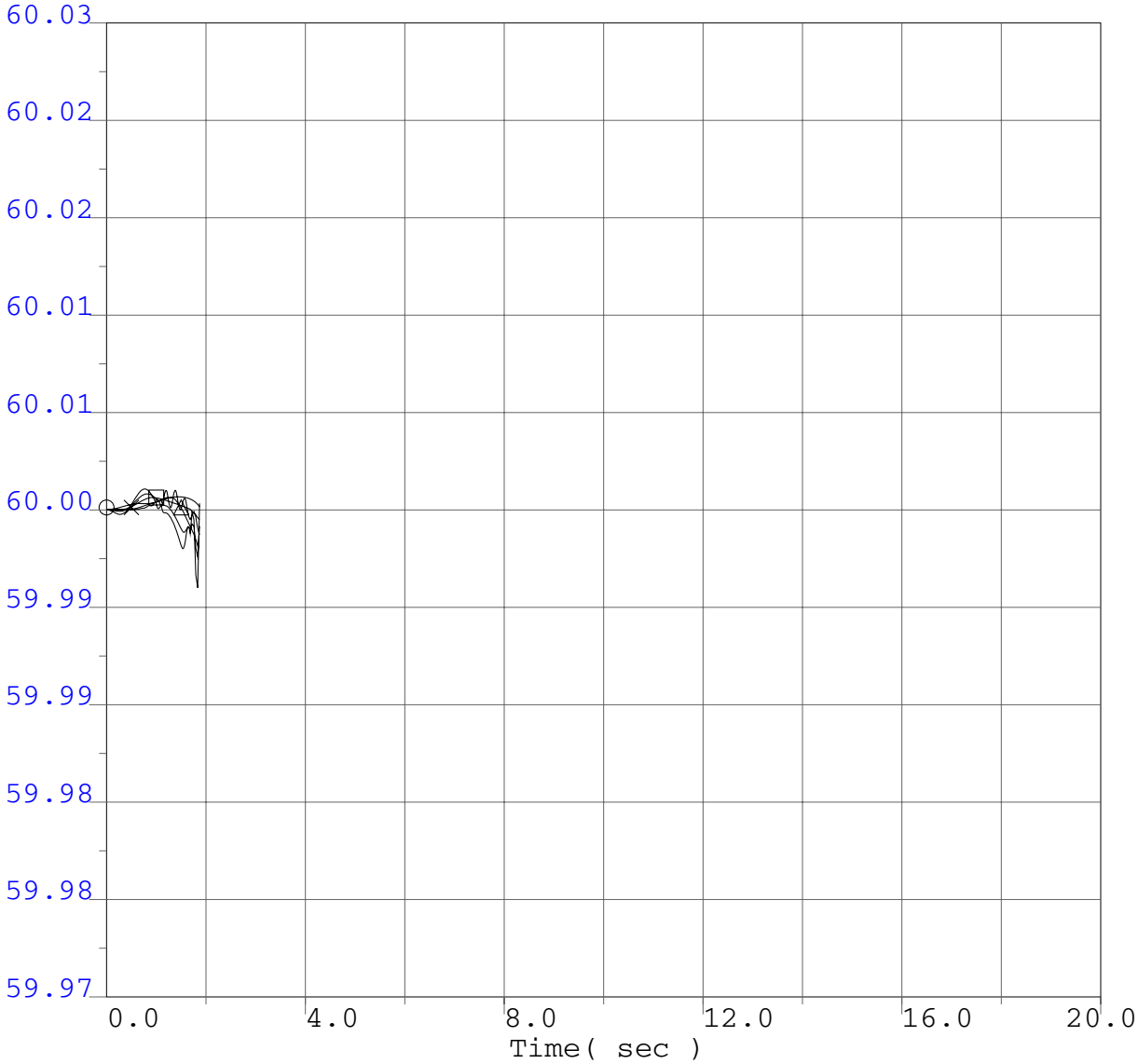

P0411 Project System Impact Study
2008 Winter Peak Base Case
P0411 @ 166.4MW
Humboldt Bay PP - Rio Dell 60kV line outage
3 ph 6 cyc flt @ Humboldt Bay PP 60kV bus & clr HBay-Rio Dell 60kV line @ 40.8

P0411 Project System Impact Study

Selected WECC Bus Frequency Plots

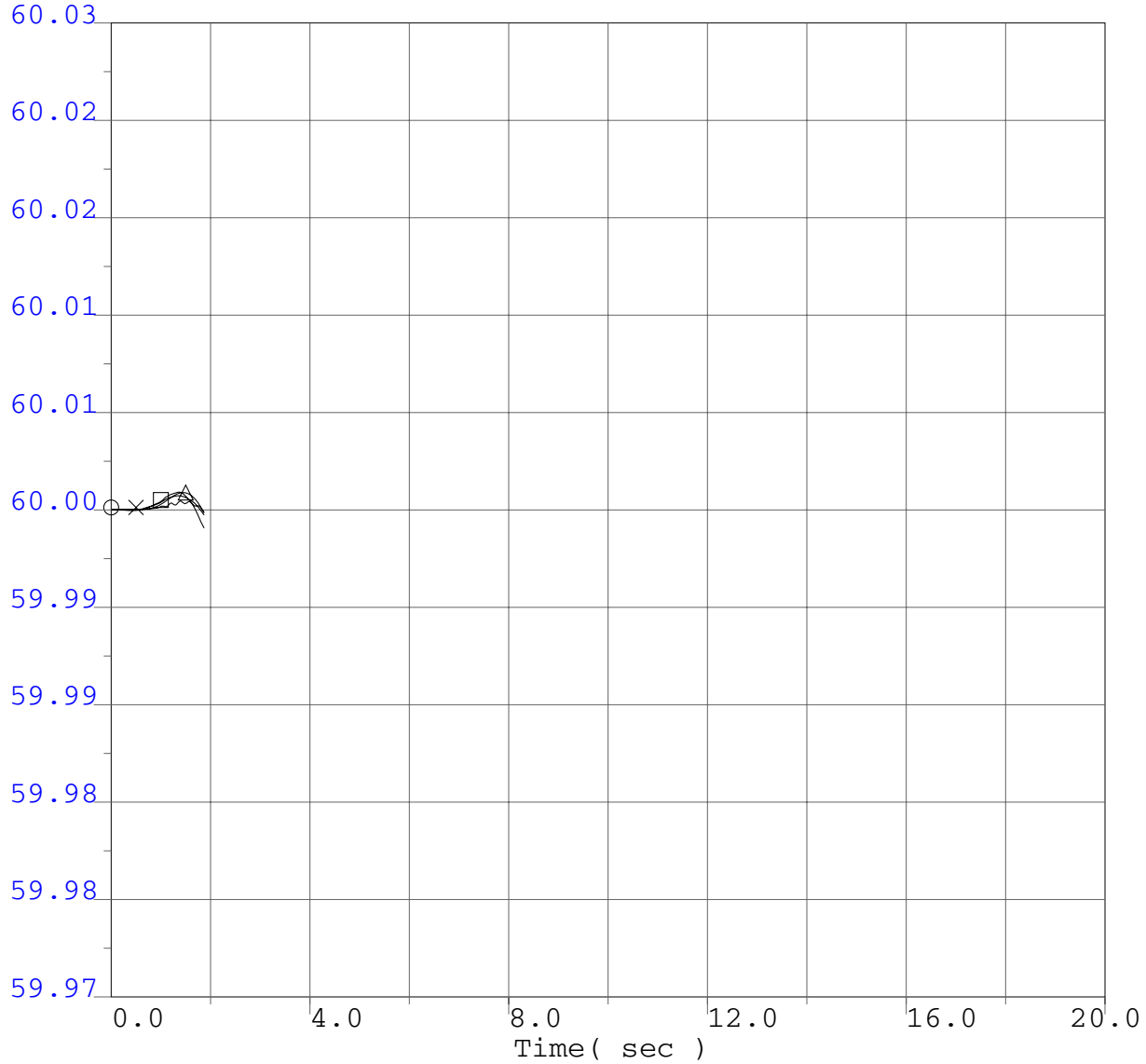

○ 59.97	fbus	54150	LANGDON2	500.0	"*"	1	60.03
× 59.97	fbus	14003	NAVAJO	500.0	"*"	1	60.03
□ 59.97	fbus	24153	VESTAL	230.0	"*"	1	60.03
△ 59.97	fbus	22360	IMPRLVLY	500.0	"*"	1	60.03

P0411 Project System Impact Study
2008 Winter Peak Base Case
P0411 @ 166.4MW
Humboldt Bay PP - Rio Dell 60kV line outage
3 ph 6 cyc flt @ Humboldt Bay PP 60kV bus & clr HBay-Rio Dell 60kV line @ 40.8

P0411 Project System Impact Study

WECC Generator Rotor Angle

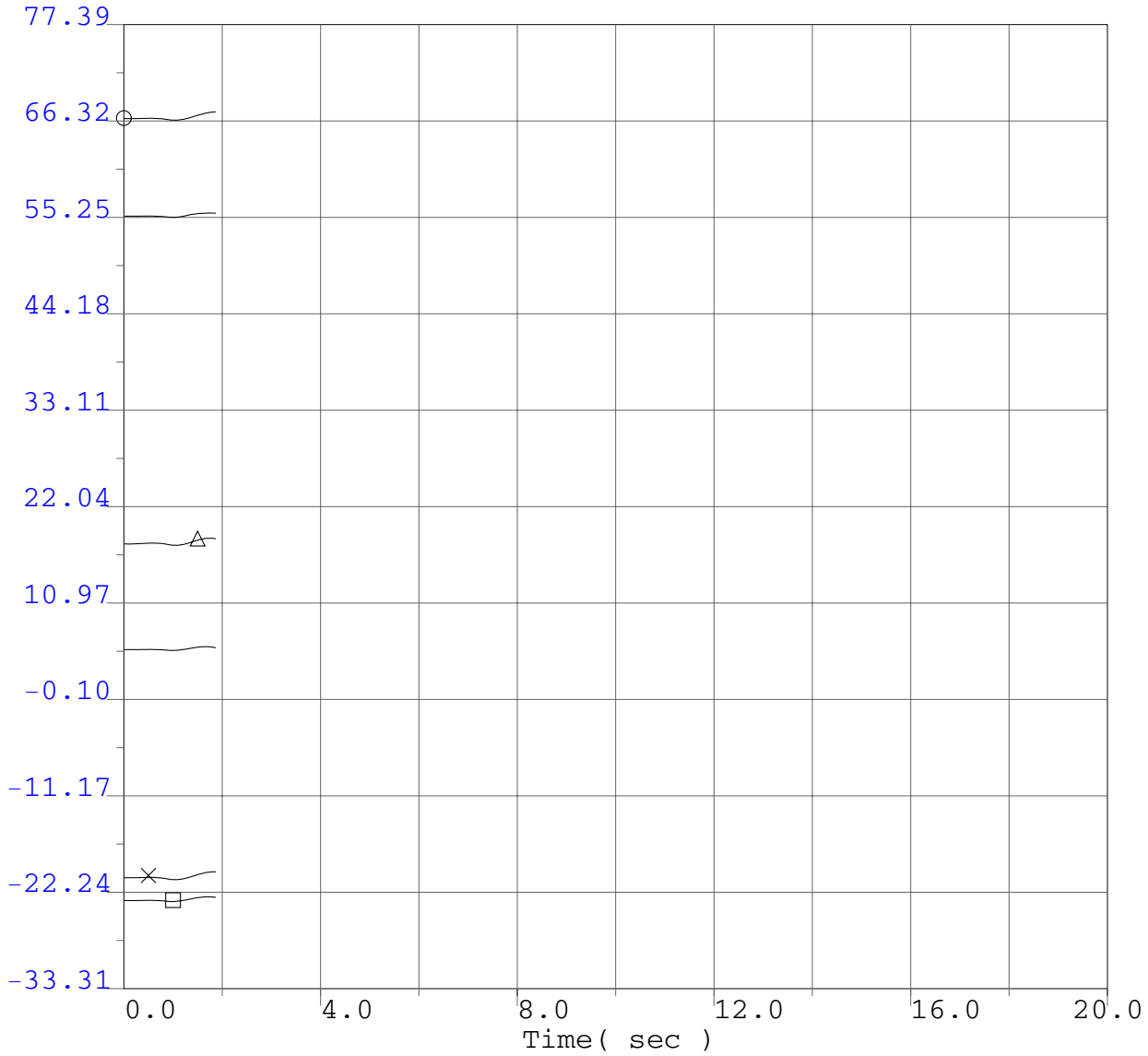

○	-33.31	ang	14914	FCNGN4CC	22.0	"H" 1	77.39
×	-33.31	ang	50500	GMS G6	13.8	"1" 1	77.39
□	-33.31	ang	60100	BRWNL 5	13.8	"1" 1	77.39
△	-33.31	ang	62048	COLSTP 3	26.0	"1" 1	77.39
◇	-33.31	ang	41701	JONDAY01	13.8	"1" 1	77.39
+	-33.31	ang	36411	DIABLO 1	25.0	"1" 1	77.39

P0411 Project System Impact Study
2008 Winter Peak Base Case
P0411 @ 166.4MW
Humboldt Bay PP - Rio Dell 60kV line outage
3 ph 6 cyc flt @ Humboldt Bay PP 60kV bus & clr HBay-Rio Dell 60kV line @ 40.8

P0411 Project System Impact Study

WECC Generator Rotor Angle

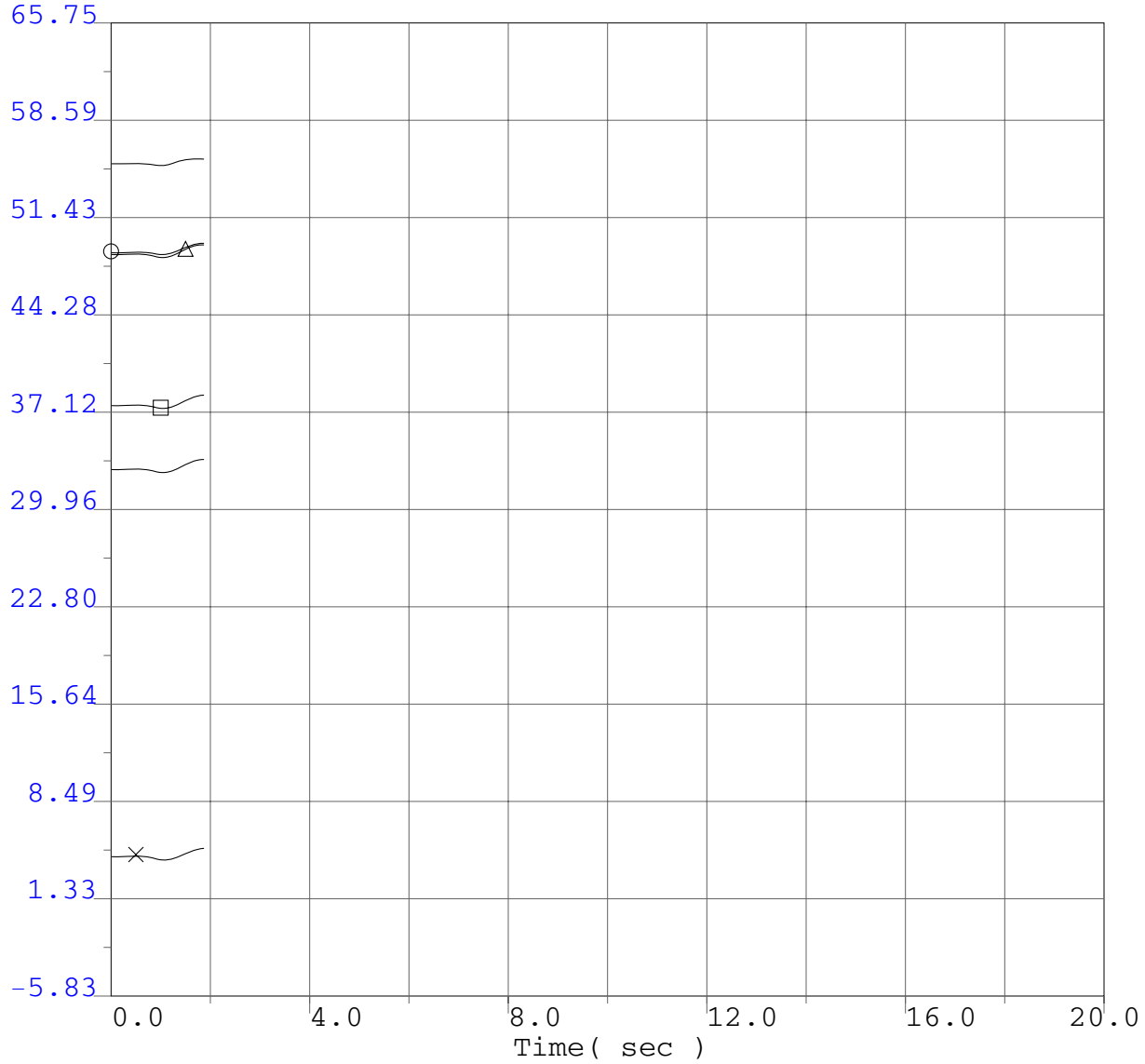

○	-5.83	ang	65490	EHUNTR 1	24.0	"1" 1	65.75
×	-5.83	ang	54280	SUND#2GN	18.0	"2" 1	65.75
□	-5.83	ang	79151	GLENC3-4	13.8	"3" 1	65.75
△	-5.83	ang	24130	S.ONOFR3	22.0	"3" 1	65.75
◇	-5.83	ang	22244	ENCINA 5	24.0	"1" 1	65.75
+	-5.83	ang	36411	DIABLO 1	25.0	"1" 1	65.75

P0411 Project System Impact Study
2008 Winter Peak Base Case
P0411 @ 166.4MW
Humboldt Bay PP - Rio Dell 60kV line outage
3 ph 6 cyc flt @ Humboldt Bay PP 60kV bus & clr HBay-Rio Dell 60kV line @ 40.8

P0411 Project System Impact Study

Selected PG&E Transmission Line Flows (MW)

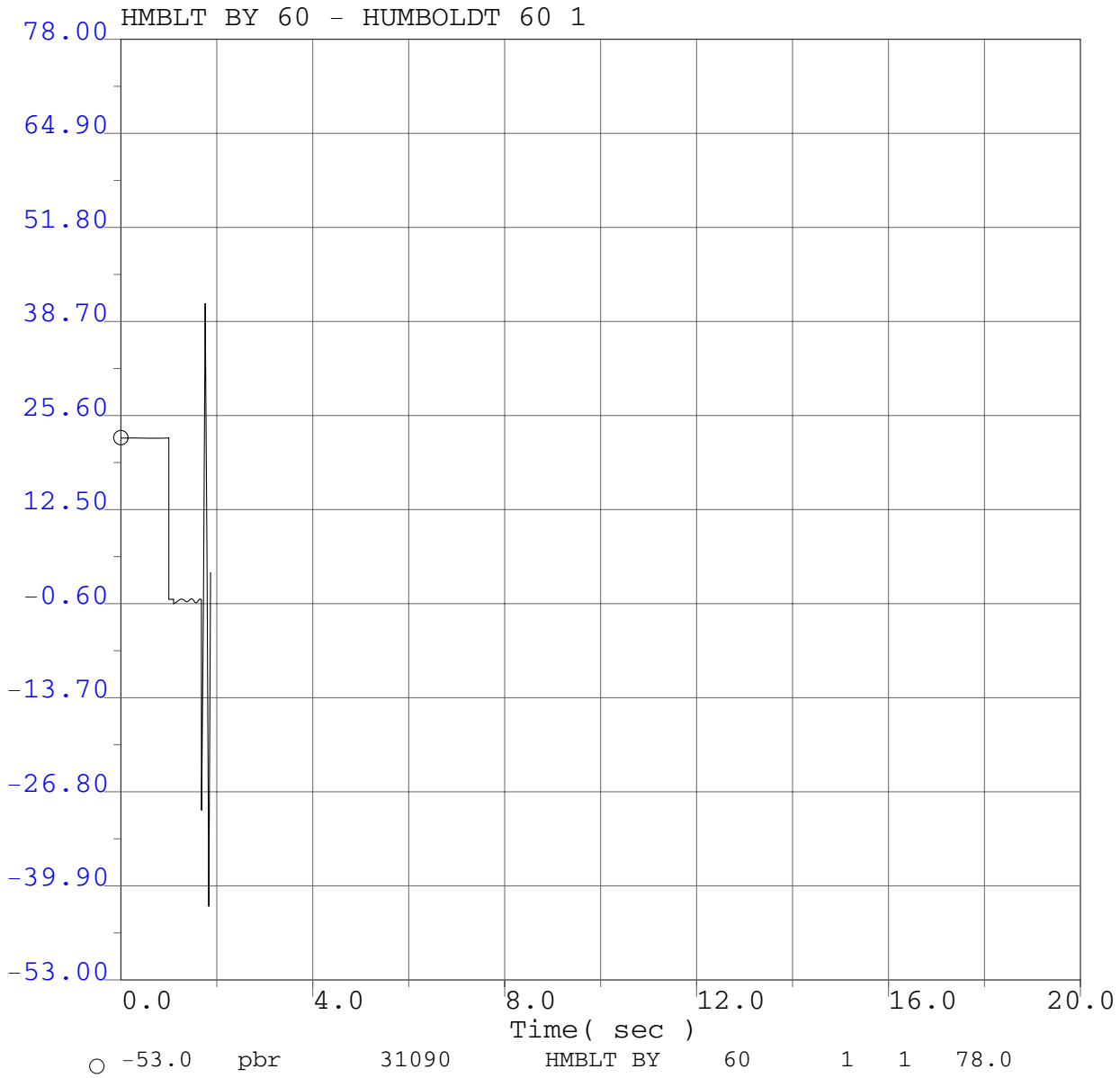

P0411 Project System Impact Study
2008 Winter Peak Base Case
P0411 @ 166.4MW
Humboldt Bay PP - Rio Dell 60kV line outage
3 ph 6 cyc flt @ Humboldt Bay PP 60kV bus & clr HBay-Rio Dell 60kV line @ 40.8

P0411 Project System Impact Study

Selected PG&E Transmission Line Flows (MW)

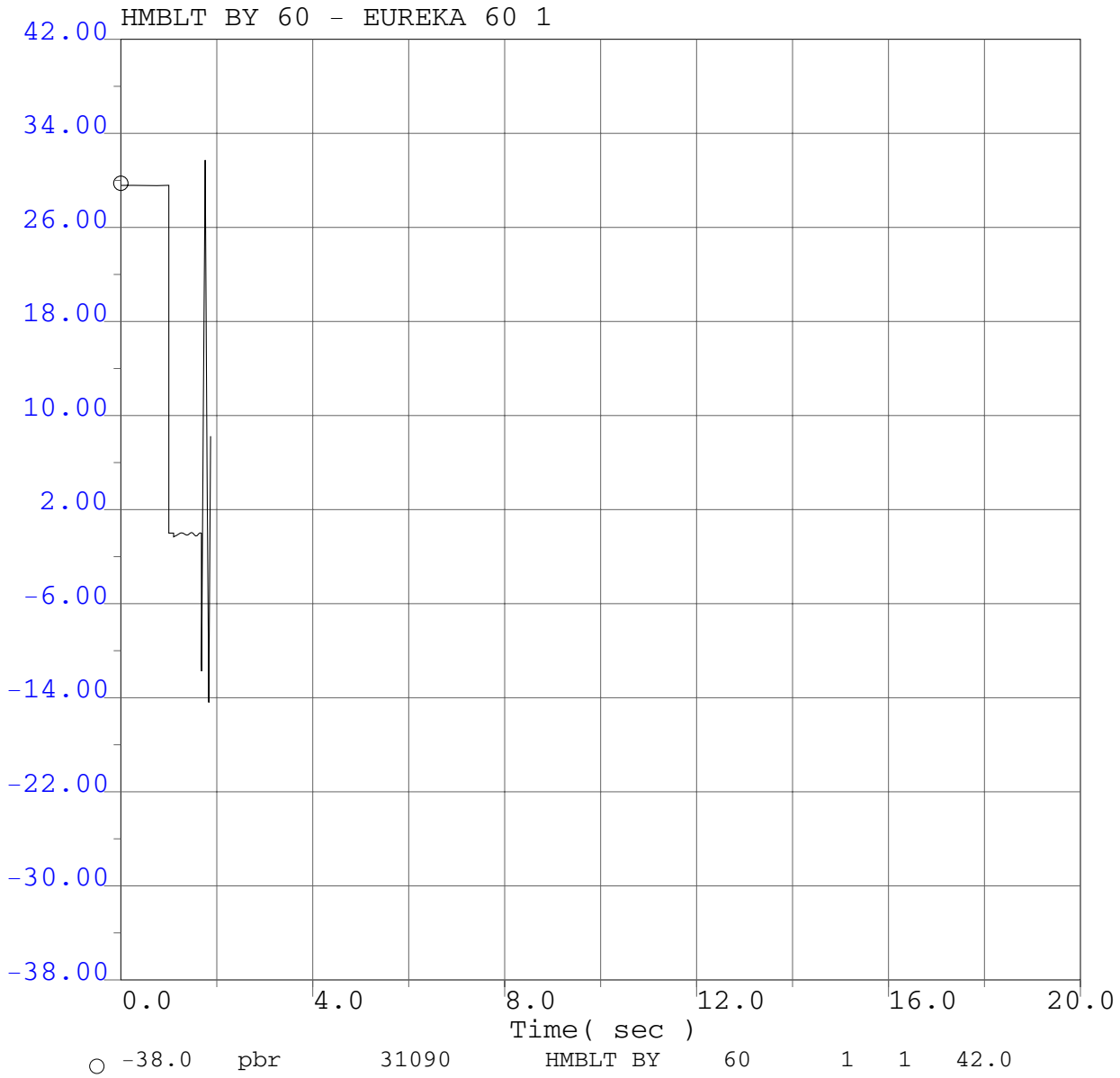

P0411 Project System Impact Study
2008 Winter Peak Base Case
P0411 @ 166.4MW
Humboldt Bay PP - Rio Dell 60kV line outage
3 ph 6 cyc flt @ Humboldt Bay PP 60kV bus & clr HBay-Rio Dell 60kV line @ 40.8

P0411 Project System Impact Study

Selected PG&E Transmission Line Flows (MW)

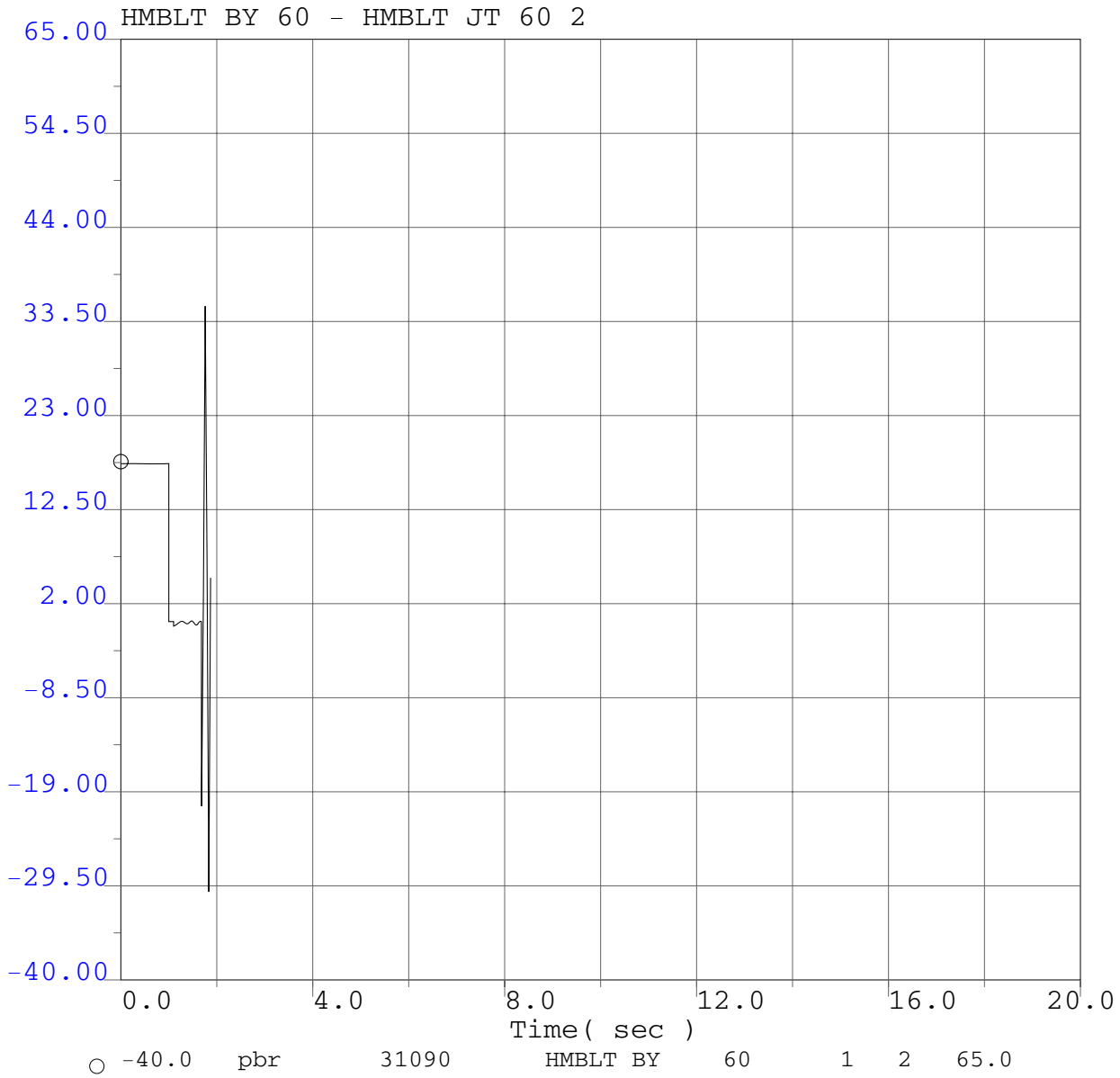

P0411 Project System Impact Study
2008 Winter Peak Base Case
P0411 @ 166.4MW
Humboldt Bay PP - Rio Dell 60kV line outage
3 ph 6 cyc flt @ Humboldt Bay PP 60kV bus & clr HBay-Rio Dell 60kV line @ 40.8

P0411 Project System Impact Study

Selected PG&E Transmission Line Flows (MW)

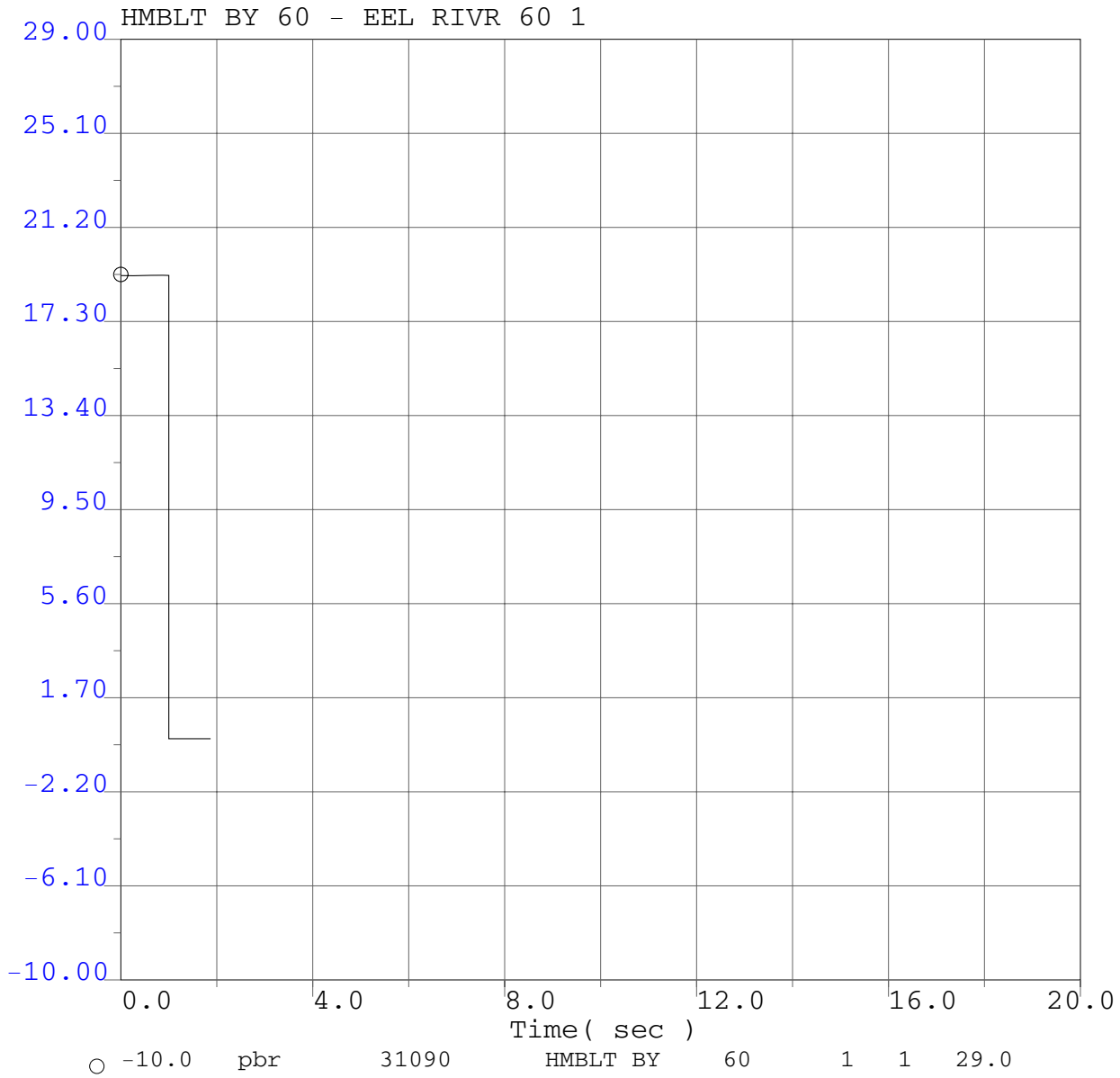

P0411 Project System Impact Study
2008 Winter Peak Base Case
P0411 @ 166.4MW
Humboldt Bay PP - Rio Dell 60kV line outage
3 ph 6 cyc flt @ Humboldt Bay PP 60kV bus & clr HBay-Rio Dell 60kV line @ 40.8

P0411 Project System Impact Study

Selected PG&E Transmission Line Flows (MW)

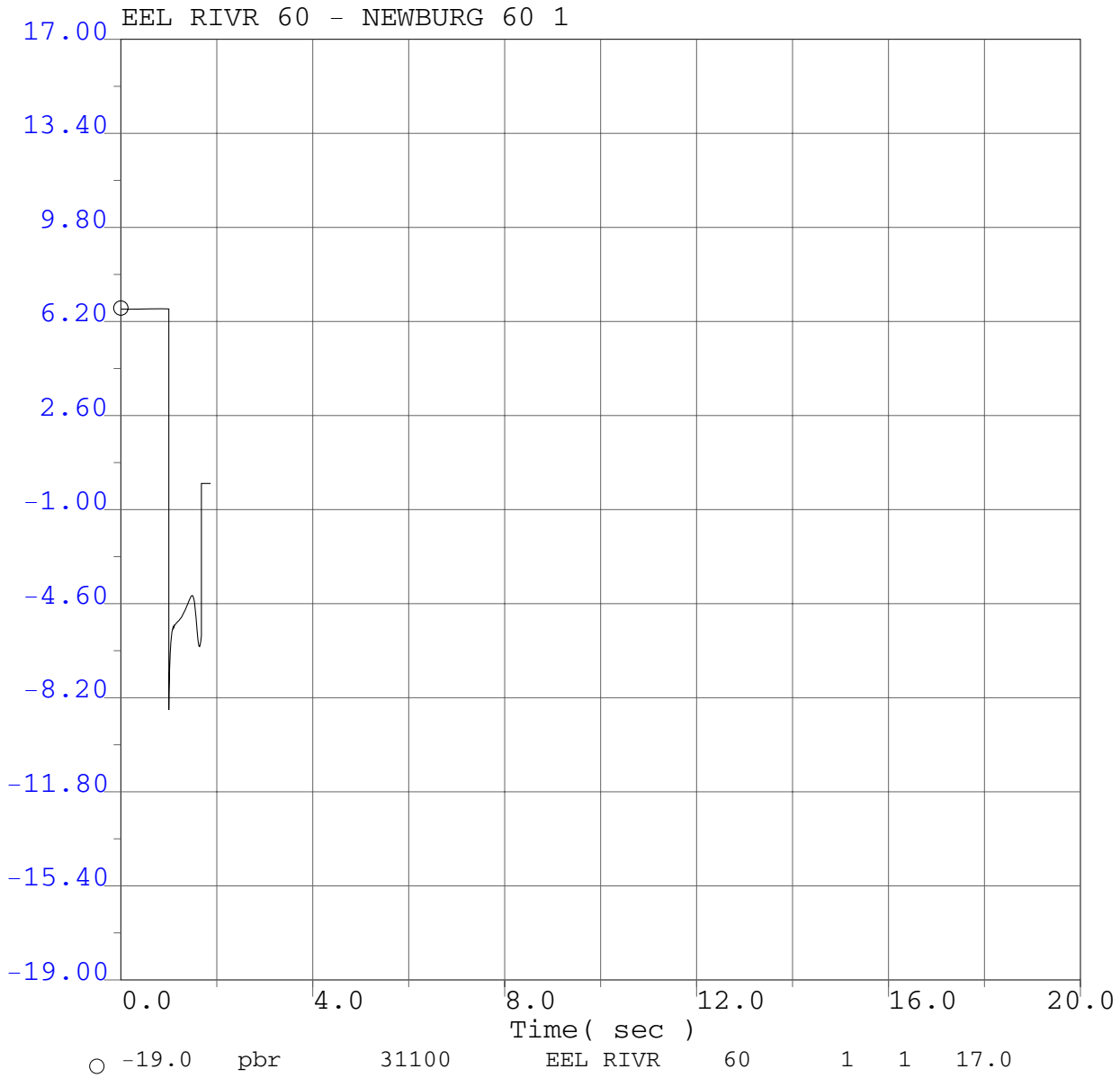

P0411 Project System Impact Study
2008 Winter Peak Base Case
P0411 @ 166.4MW
Humboldt Bay PP - Rio Dell 60kV line outage
3 ph 6 cyc flt @ Humboldt Bay PP 60kV bus & clr HBay-Rio Dell 60kV line @ 40.8

P0411 Project System Impact Study

Selected PG&E Transmission Line Flows (MW)

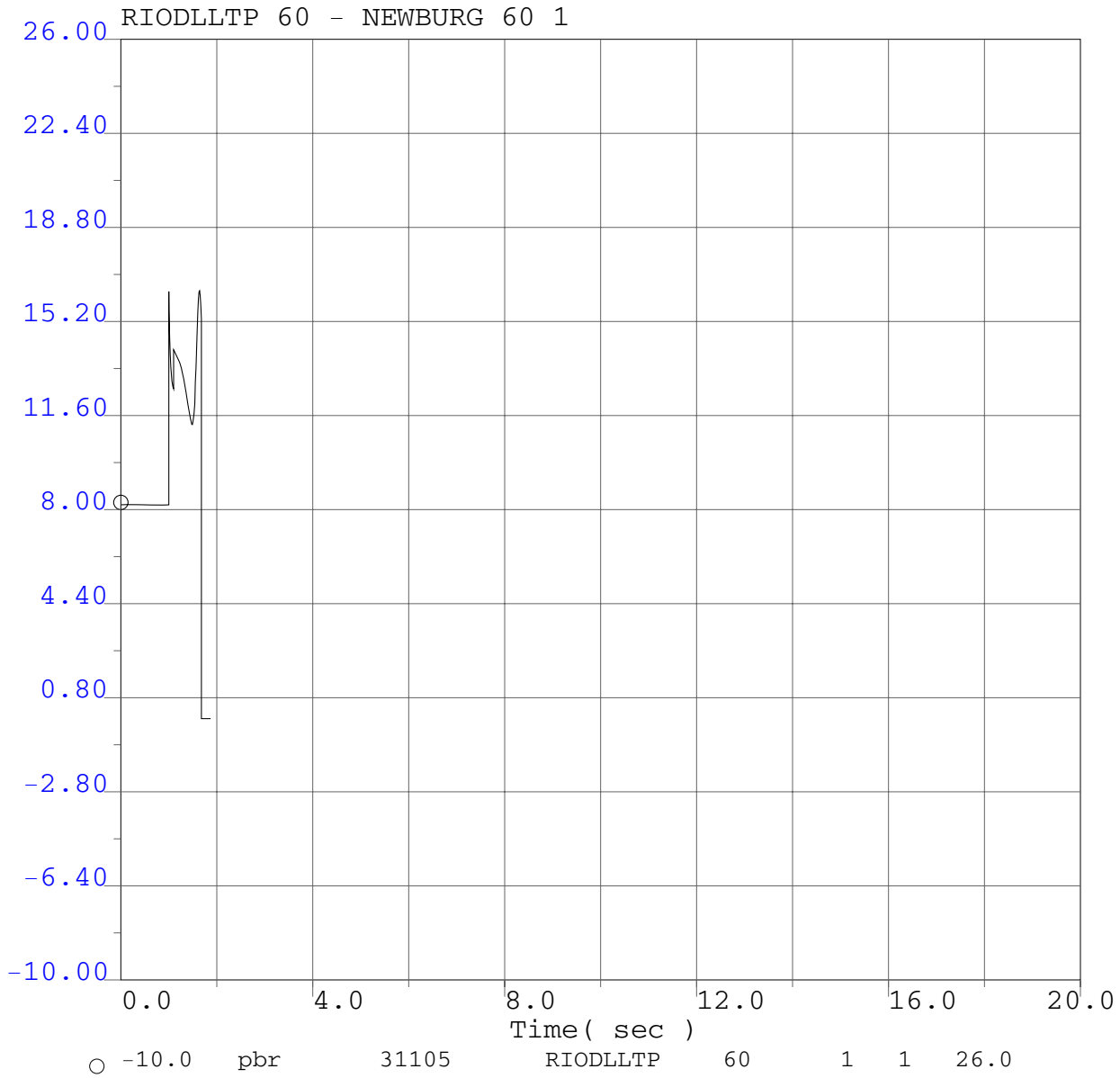

P0411 Project System Impact Study
2008 Winter Peak Base Case
P0411 @ 166.4MW
Humboldt Bay PP - Rio Dell 60kV line outage
3 ph 6 cyc flt @ Humboldt Bay PP 60kV bus & clr HBay-Rio Dell 60kV line @ 40.8

P0411 Project System Impact Study

Selected PG&E Transmission Line Flows (MW)

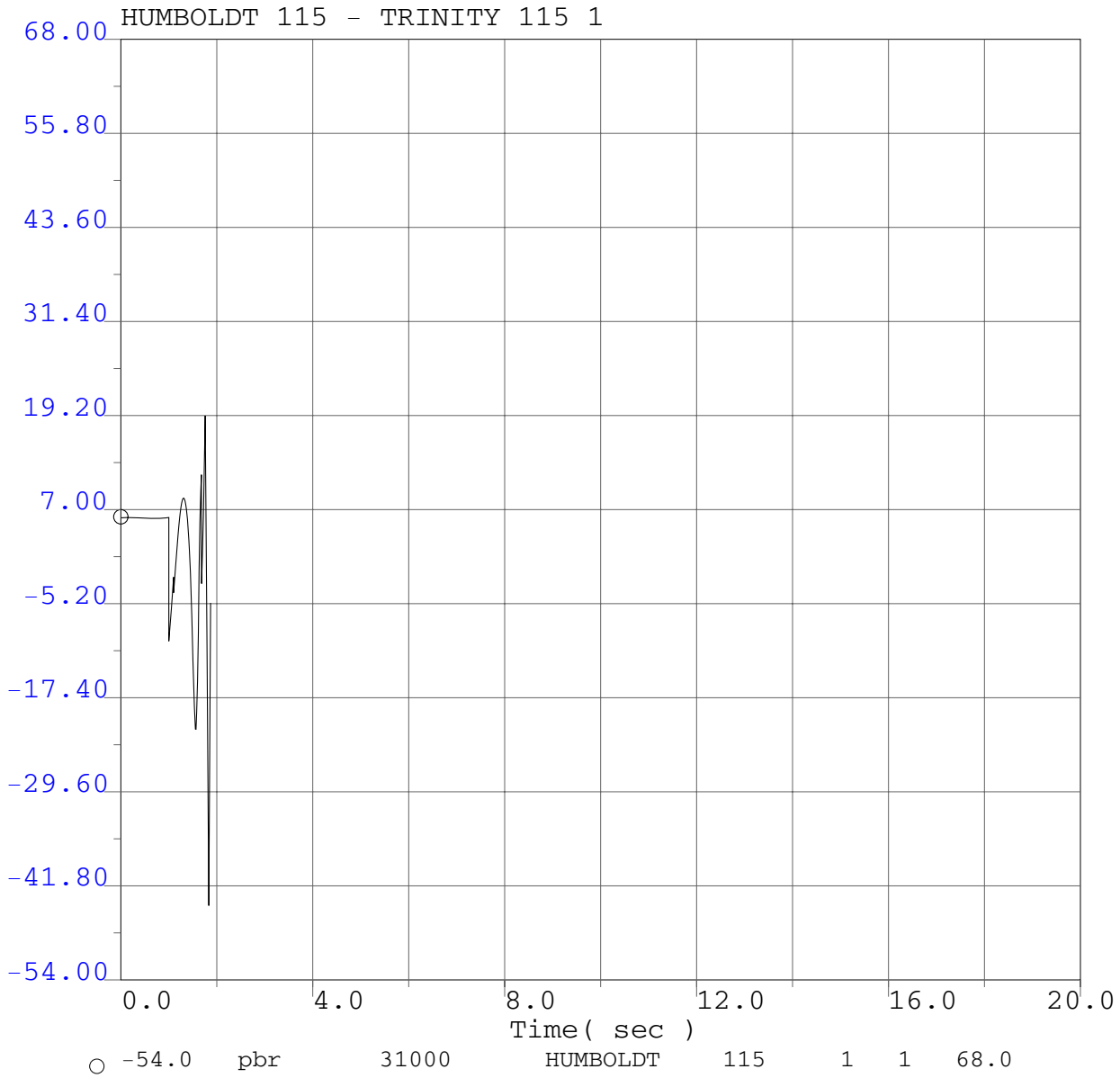

P0411 Project System Impact Study
2008 Winter Peak Base Case
P0411 @ 166.4MW
Humboldt Bay PP - Rio Dell 60kV line outage
3 ph 6 cyc flt @ Humboldt Bay PP 60kV bus & clr HBay-Rio Dell 60kV line @ 40.8

P0411 Project System Impact Study

Selected PG&E Transmission Line Flows (MW)

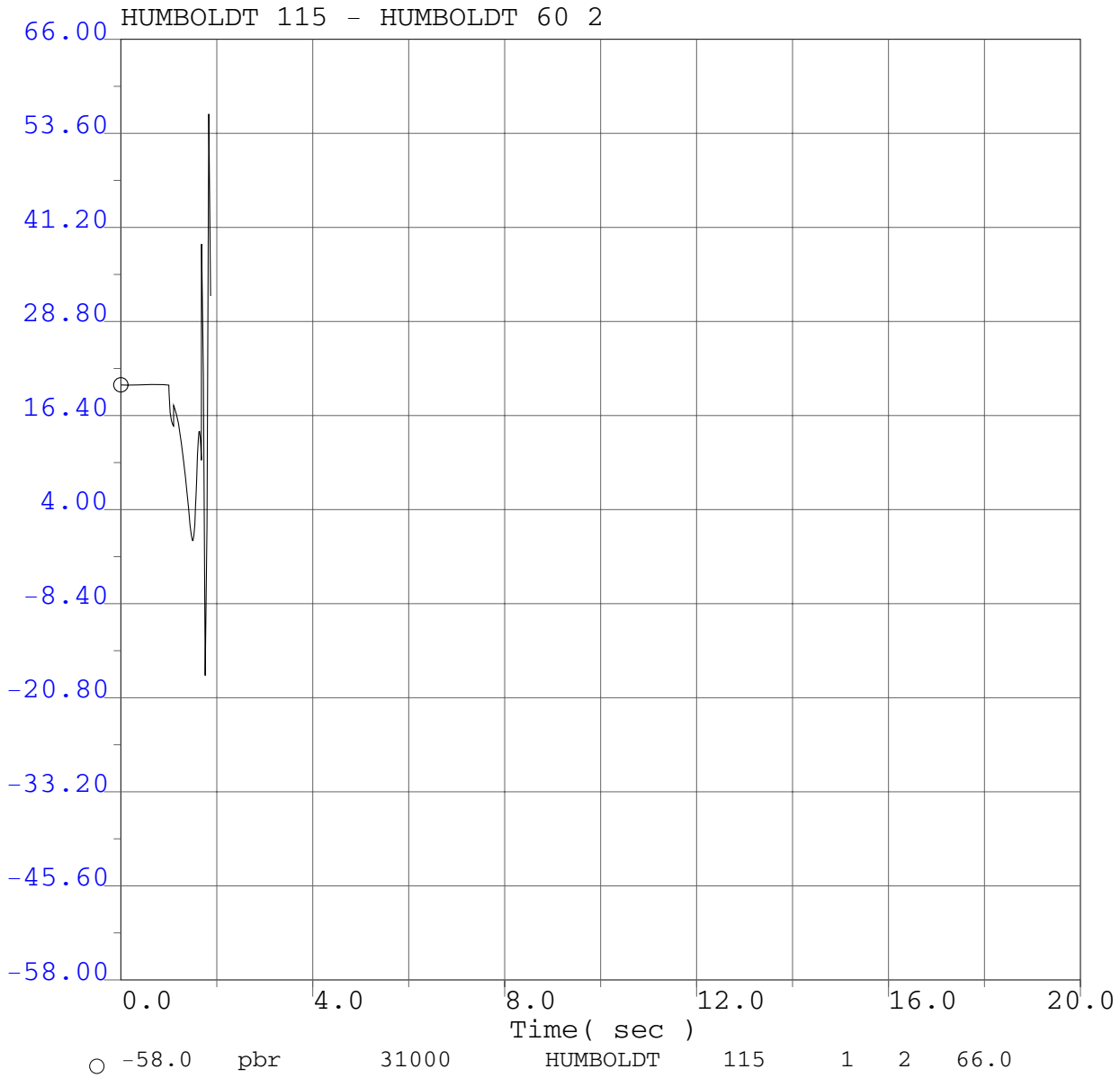

P0411 Project System Impact Study
2008 Winter Peak Base Case
P0411 @ 166.4MW
Humboldt Bay PP - Rio Dell 60kV line outage
3 ph 6 cyc flt @ Humboldt Bay PP 60kV bus & clr HBay-Rio Dell 60kV line @ 40.8

P0411 Project System Impact Study

Selected PG&E Transmission Line Flows (MW)

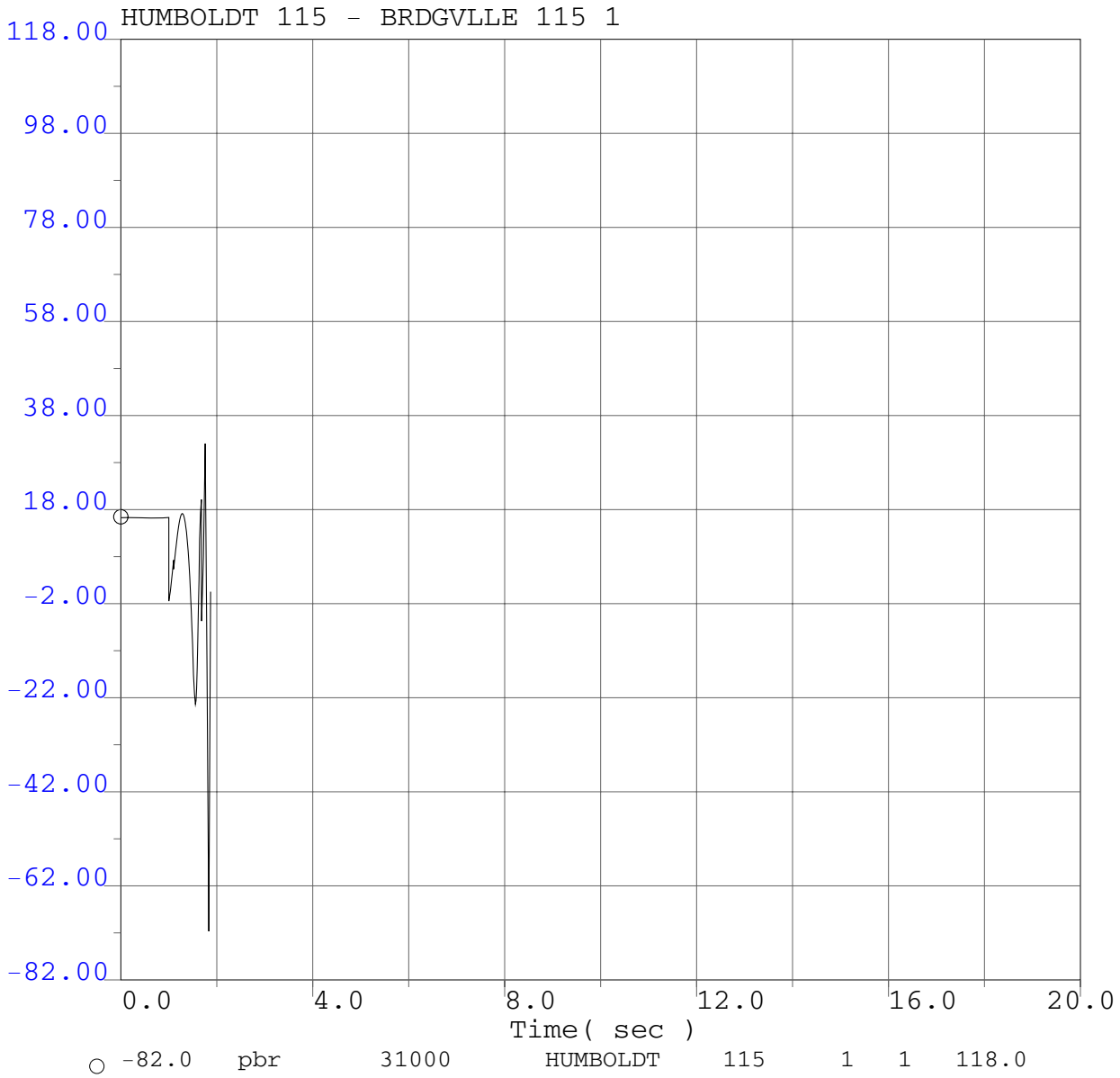

P0411 Project System Impact Study
2008 Winter Peak Base Case
P0411 @ 166.4MW
Humboldt Bay PP - Rio Dell 60kV line outage
3 ph 6 cyc flt @ Humboldt Bay PP 60kV bus & clr HBay-Rio Dell 60kV line @ 40.8

P0411 Project System Impact Study

Selected PG&E Transmission Line Flows (MW)

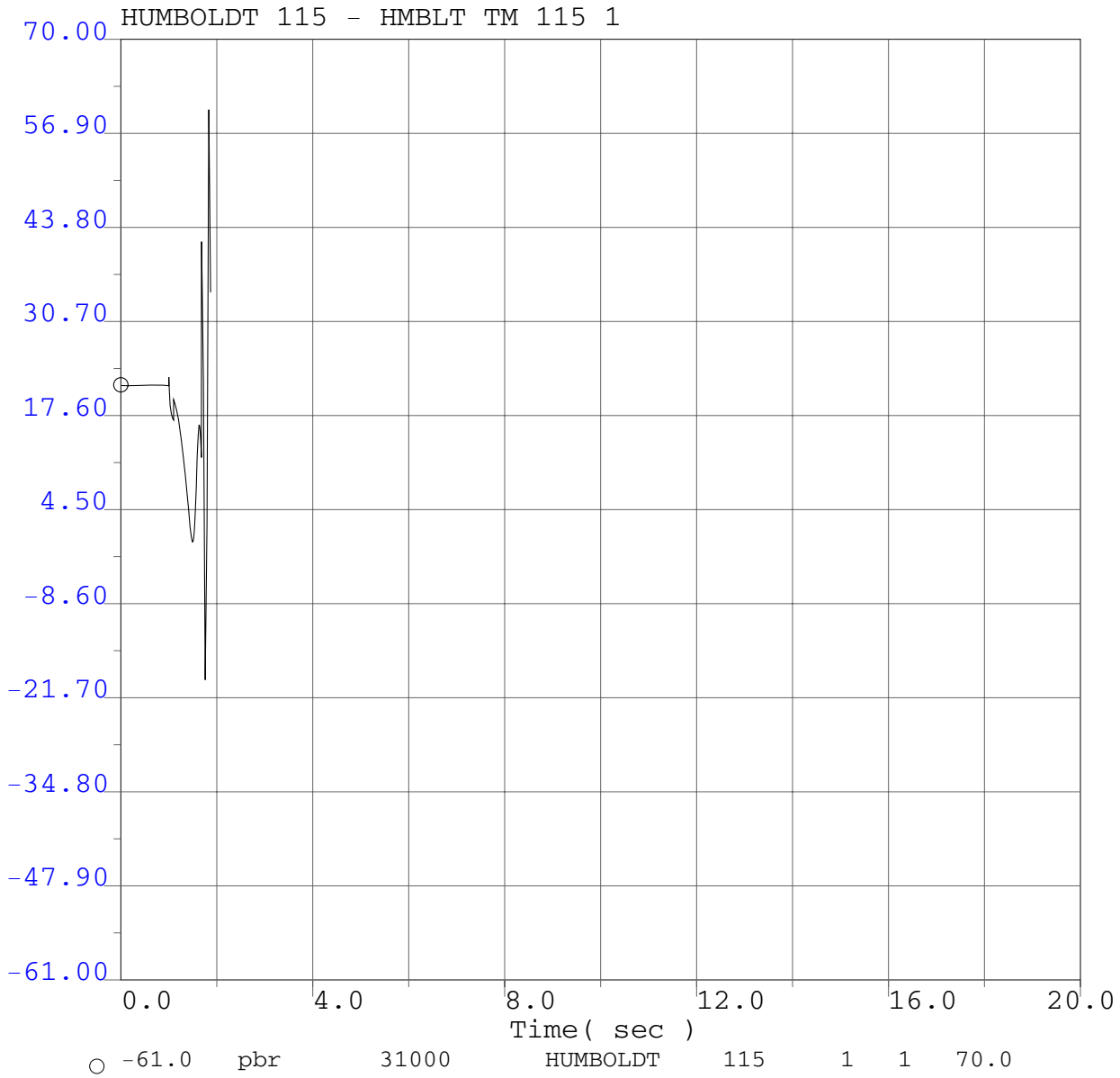

P0411 Project System Impact Study
2008 Winter Peak Base Case
P0411 @ 166.4MW
Humboldt Bay PP - Rio Dell 60kV line outage
3 ph 6 cyc flt @ Humboldt Bay PP 60kV bus & clr HBay-Rio Dell 60kV line @ 40.8

P0411 Project System Impact Study

Selected PG&E Bus Voltage Plots Adjacent to Fault

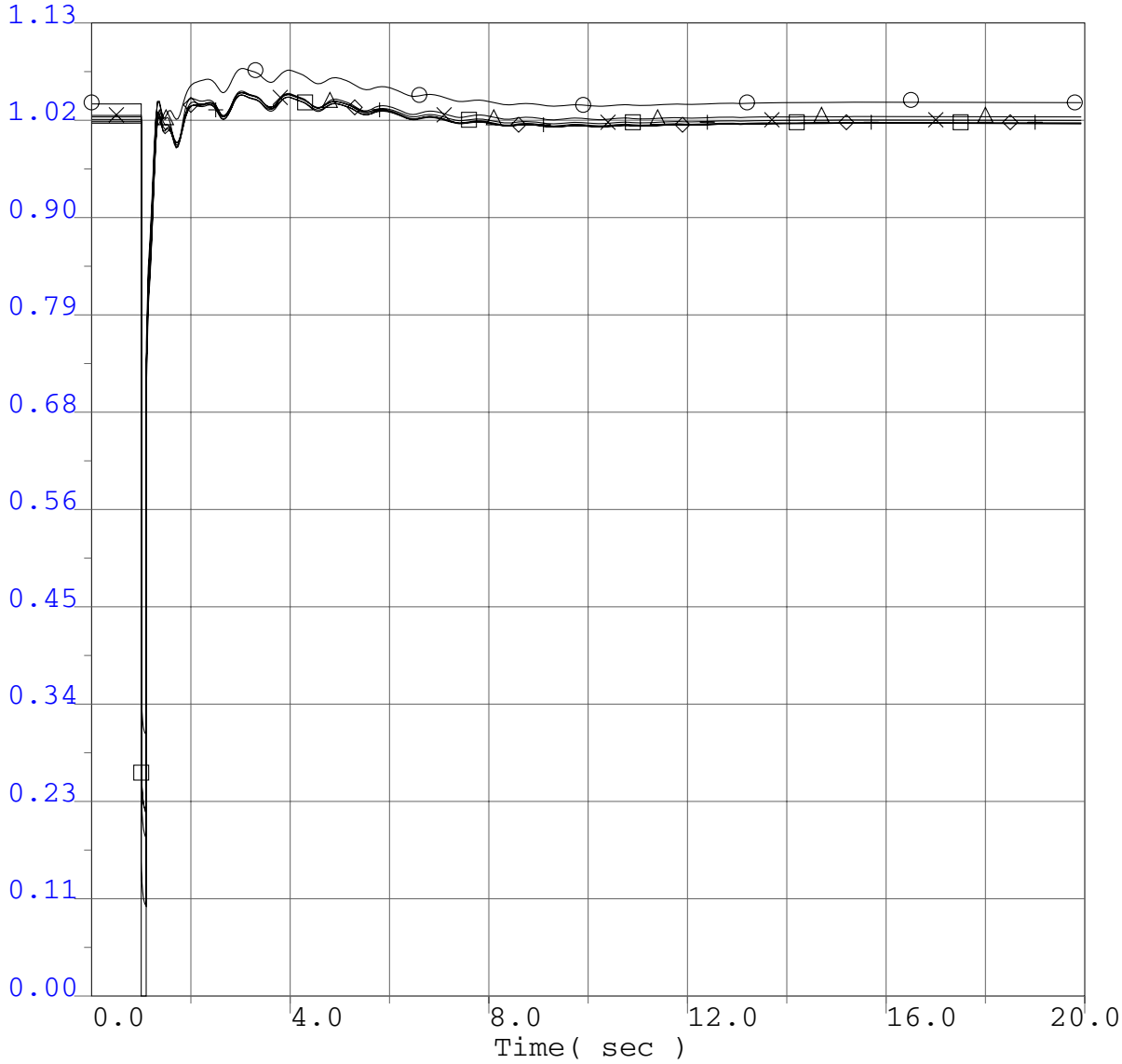

○	0.0	vbul	31090	HMBLT BY	60.0	"*"	1	1.13
×	0.0	vbus	31080	HUMBOLDT	60.0	"*"	1	1.13
□	0.0	vbul	31102	NEWBURG	60.0	"*"	1	1.13
△	0.0	vbus	31105	RIODLLTP	60.0	"*"	1	1.13
◇	0.0	vbul	31086	EUREKA	60.0	"*"	1	1.13
+	0.0	vbul	31082	HARRIS	60.0	"*"	1	1.13

P0411 Project System Impact Study
2008 Winter Peak Base Case
P0411 @ 166.4MW
Humboldt Bay PP - Bumboldt #1 60kV line outage
3 ph 6 cyc flt @ Humboldt Bay PP 60kV bus & clr HBay-Humb #1 60kV line

P0411 Project System Impact Study

Selected PG&E Bus Frequency Plots Adjacent to Fault

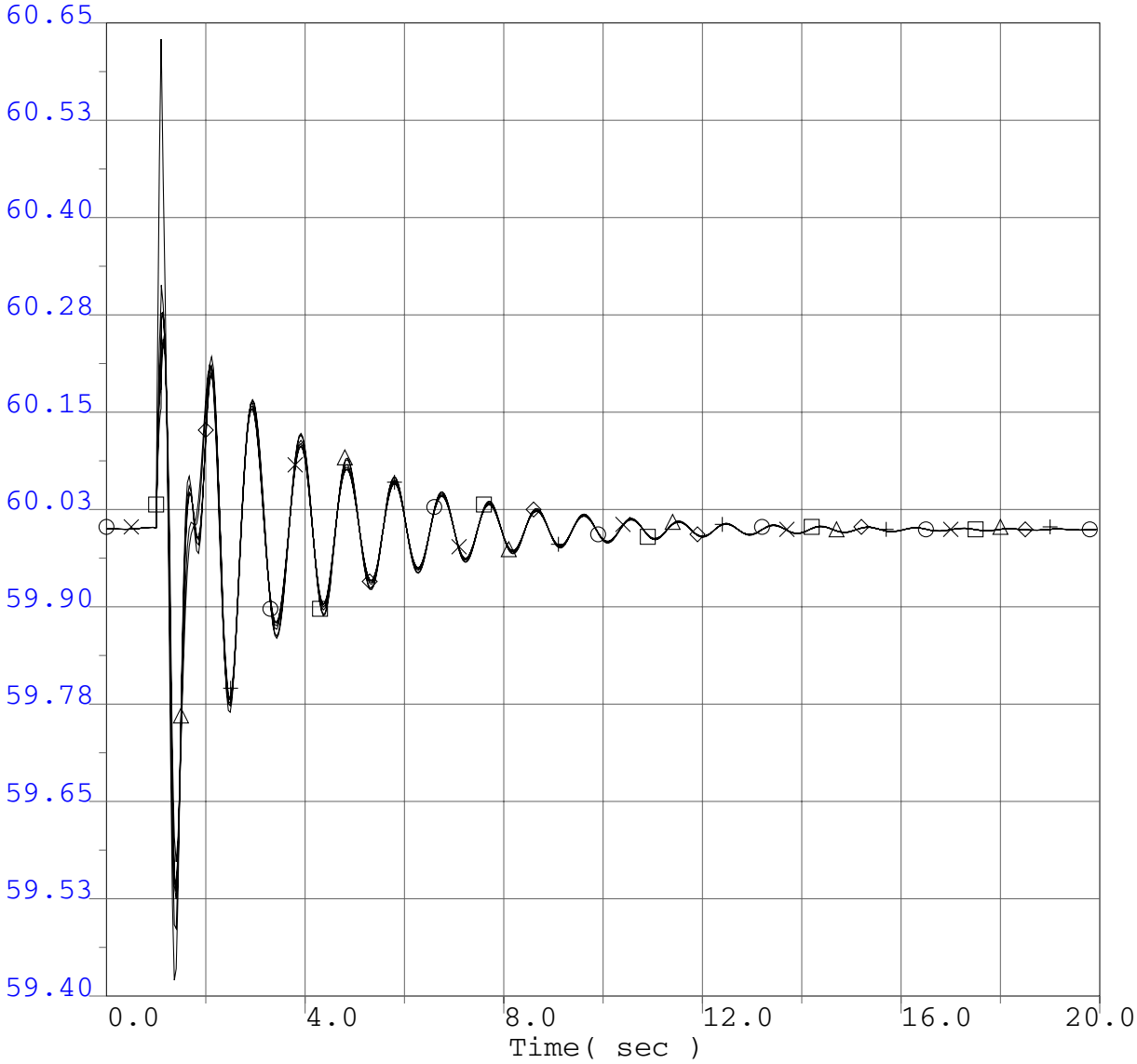

○	59.4	fbul	31090	HMBLT BY	60.0	"*" 1	60.65
×	59.4	fbus	31080	HUMBOLDT	60.0	"*" 1	60.65
□	59.4	fbul	31102	NEWBURG	60.0	"*" 1	60.65
△	59.4	fbus	31105	RIODLLTP	60.0	"*" 1	60.65
◇	59.4	fbul	31086	EUREKA	60.0	"*" 1	60.65
+	59.4	fbul	31082	HARRIS	60.0	"*" 1	60.65

P0411 Project System Impact Study
2008 Winter Peak Base Case
P0411 @ 166.4MW
Humboldt Bay PP - Bumboldt #1 60kV line outage
3 ph 6 cyc flt @ Humboldt Bay PP 60kV bus & clr HBay-Humb #1 60kV line

P0411 Project System Impact Study

Project Generator Terminal Voltages

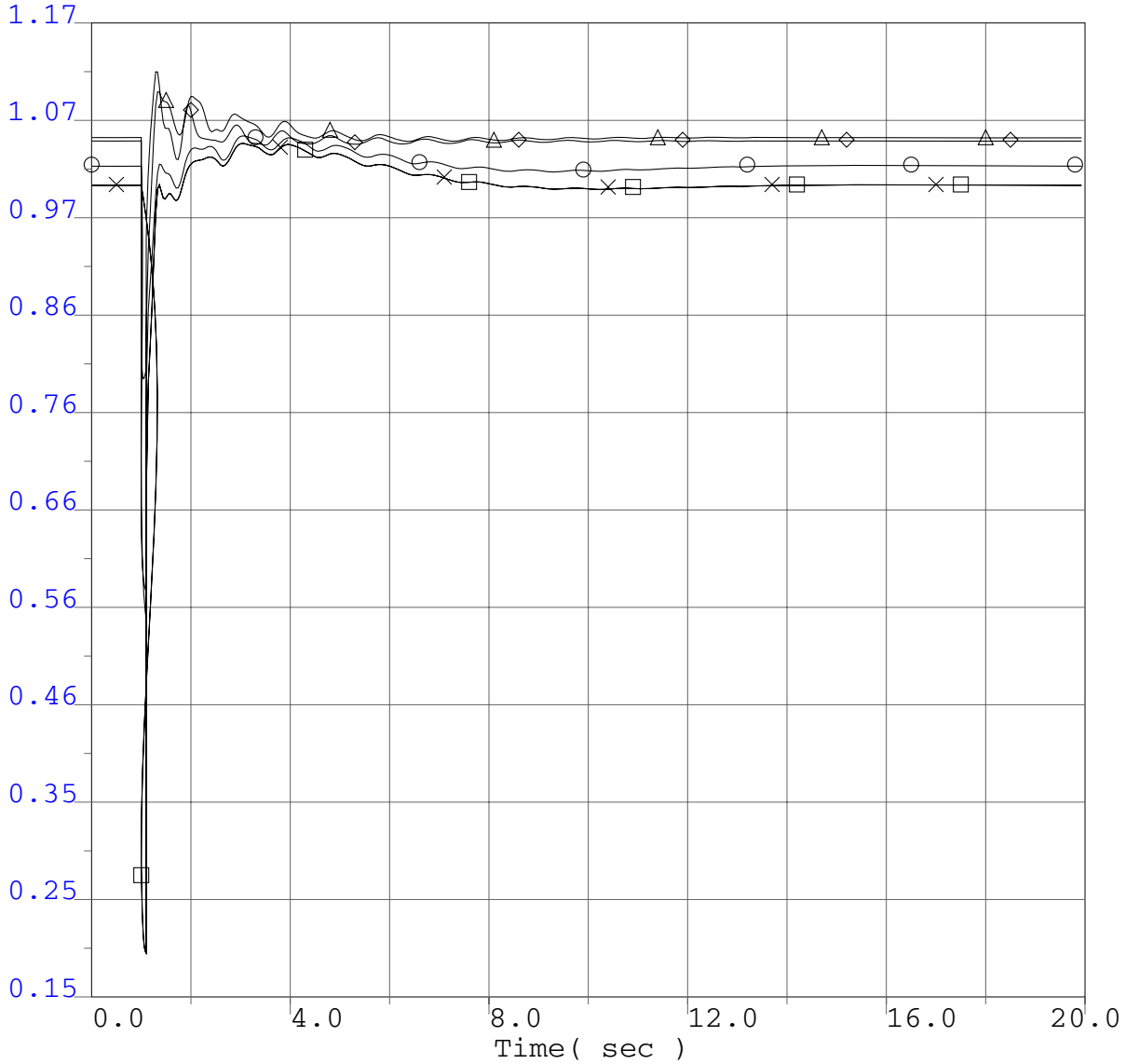

○	0.15	vt	31180	P0411G1	13.8	"1" 1	1.17
×	0.15	vt	31181	P0411G2	13.8	"5" 1	1.17
□	0.15	vt	31182	P0411G3	13.8	"8" 1	1.17
△	0.15	vt	31150	FAIRHAVN	13.8	"1" 1	1.17
◇	0.15	vt	31158	LP SAMOA	12.5	"1" 1	1.17

P0411 Project System Impact Study
2008 Winter Peak Base Case
P0411 @ 166.4MW
Humboldt Bay PP - Bumboldt #1 60kV line outage
3 ph 6 cyc flt @ Humboldt Bay PP 60kV bus & clr HBay-Humb #1 60kV line

P0411 Project System Impact Study

Project Generator Rotor Speed

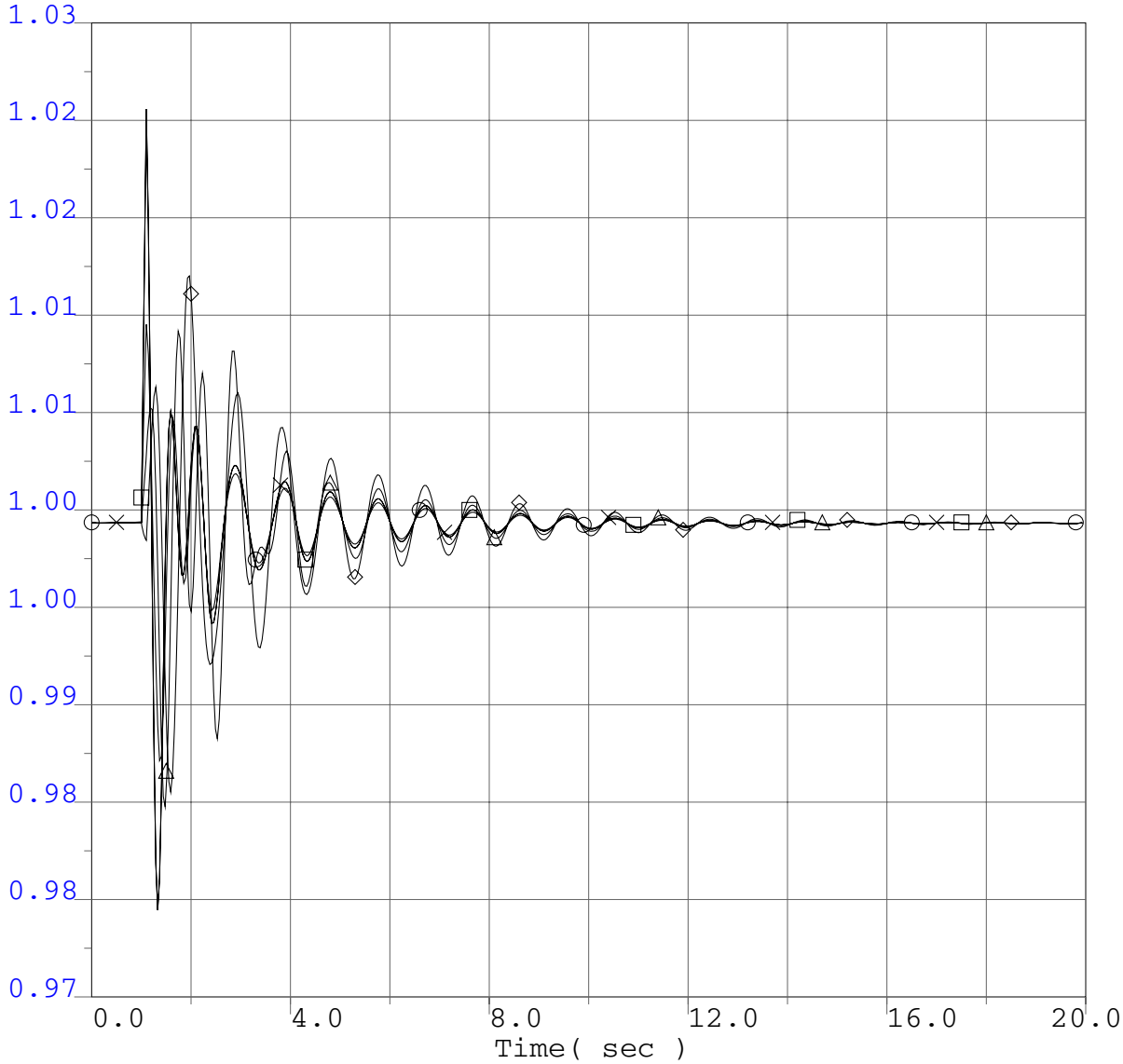

○	0.9726	spd	31180	P0411G1	13.8	"1" 1	1.0289
×	0.9726	spd	31181	P0411G2	13.8	"5" 1	1.0289
□	0.9726	spd	31182	P0411G3	13.8	"8" 1	1.0289
△	0.9726	spd	31150	FAIRHAVN	13.8	"1" 1	1.0289
◇	0.9726	spd	31158	LP SAMOA	12.5	"1" 1	1.0289

P0411 Project System Impact Study
2008 Winter Peak Base Case
P0411 @ 166.4MW
Humboldt Bay PP - Bumboldt #1 60kV line outage
3 ph 6 cyc flt @ Humboldt Bay PP 60kV bus & clr HBay-Humb #1 60kV line

P0411 Project System Impact Study

Project Generator Terminal Power

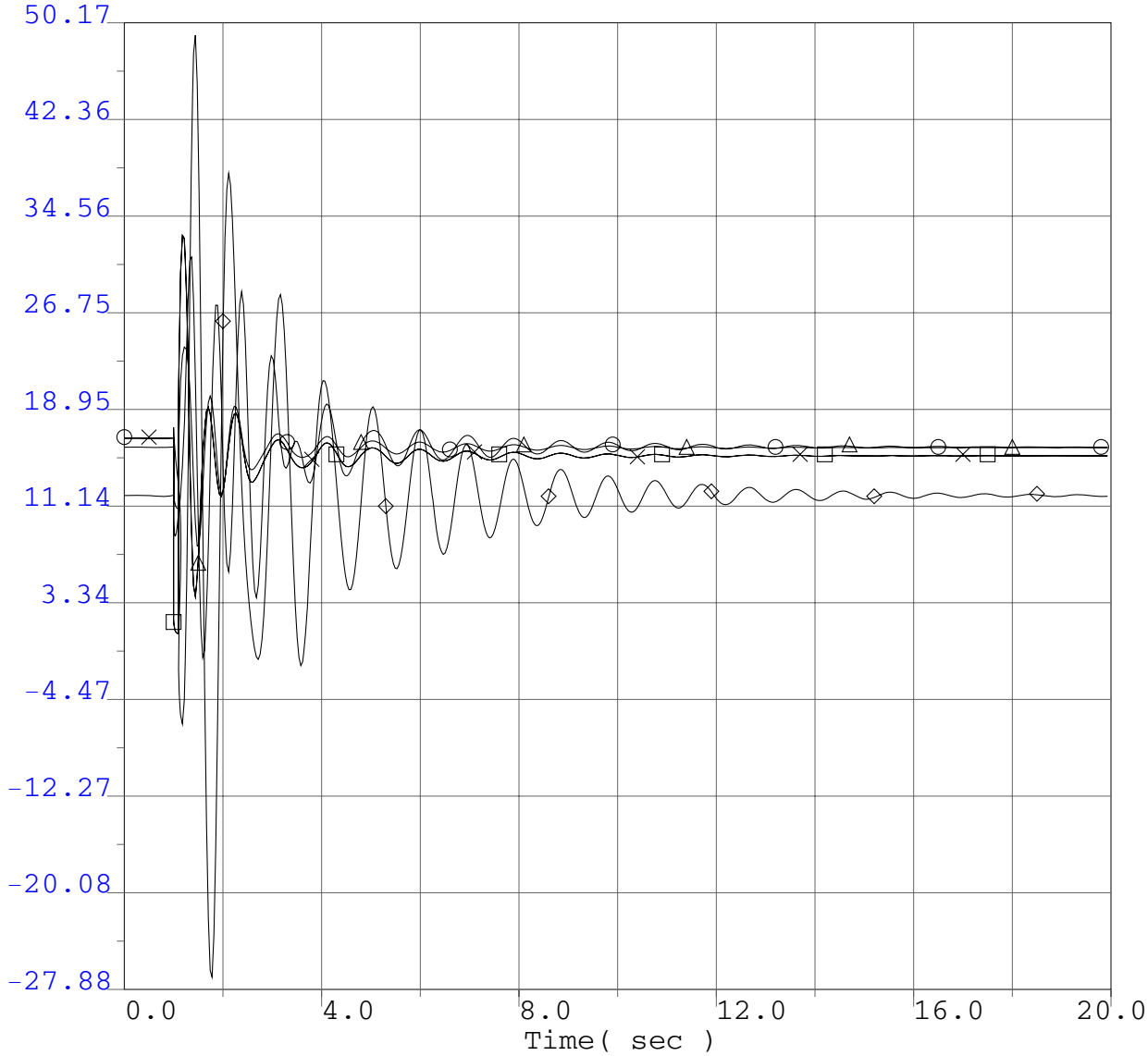

○	-27.88	pg	31180	P0411G1	13.8	"1" 1	50.17
×	-27.88	pg	31181	P0411G2	13.8	"5" 1	50.17
□	-27.88	pg	31182	P0411G3	13.8	"8" 1	50.17
△	-27.88	pg	31150	FAIRHAVN	13.8	"1" 1	50.17
◇	-27.88	pg	31158	LP SAMOA	12.5	"1" 1	50.17

P0411 Project System Impact Study
2008 Winter Peak Base Case
P0411 @ 166.4MW
Humboldt Bay PP - Bumboldt #1 60kV line outage
3 ph 6 cyc flt @ Humboldt Bay PP 60kV bus & clr HBay-Humb #1 60kV line

P0411 Project System Impact Study

Project Generator Terminal Reactive Power

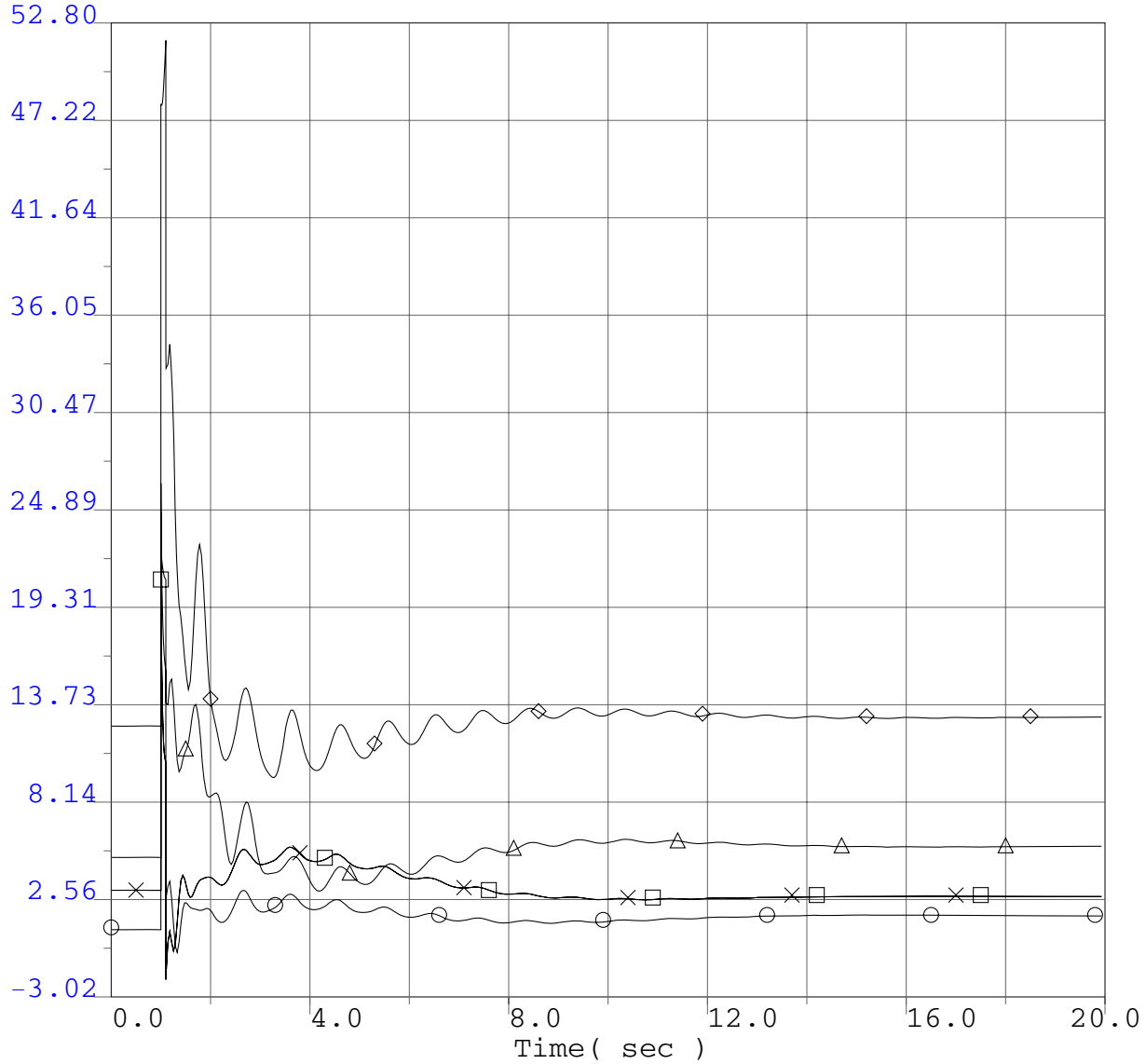

○	-3.02	qg	31180	P0411G1	13.8	"1" 1	52.8
×	-3.02	qg	31181	P0411G2	13.8	"5" 1	52.8
□	-3.02	qg	31182	P0411G3	13.8	"8" 1	52.8
△	-3.02	qg	31150	FAIRHAVN	13.8	"1" 1	52.8
◇	-3.02	qg	31158	LP SAMOA	12.5	"1" 1	52.8

P0411 Project System Impact Study
2008 Winter Peak Base Case
P0411 @ 166.4MW
Humboldt Bay PP - Bumboldt #1 60kV line outage
3 ph 6 cyc flt @ Humboldt Bay PP 60kV bus & clr HBay-Humb #1 60kV line

P0411 Project System Impact Study

Selected WECC Bus Voltage Plots

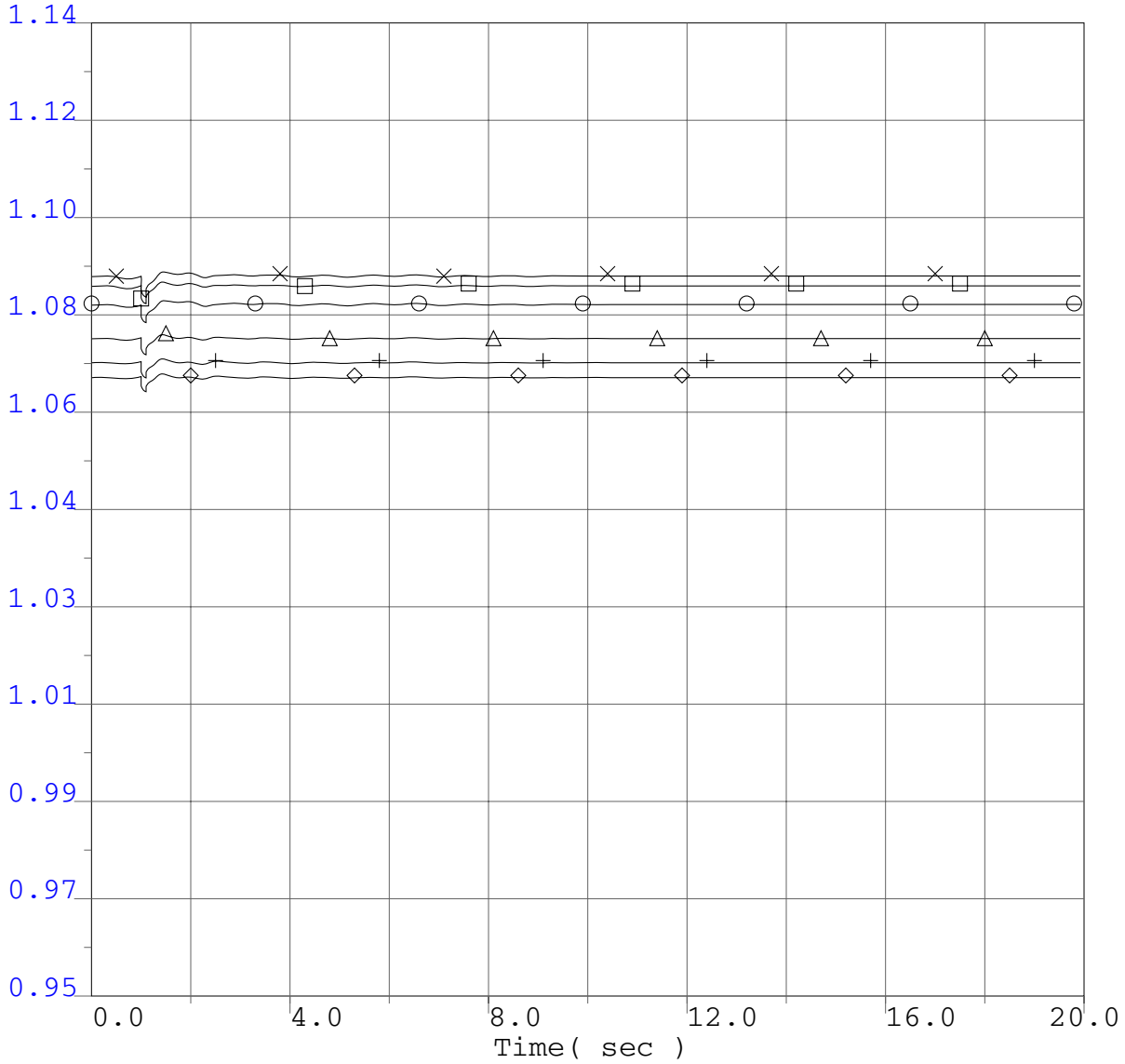

○ 0.95	vbus	40687	MALIN	500.0	"*" 1	1.14
× 0.95	vbus	30005	ROUND MT	500.0	"*" 1	1.14
□ 0.95	vbus	30015	TABLE MT	500.0	"*" 1	1.14
△ 0.95	vbus	30030	VACA-DIX	500.0	"*" 1	1.14
◇ 0.95	vbus	30040	TESLA	500.0	"*" 1	1.14
+ 0.95	vbus	30035	TRACY	500.0	"*" 1	1.14

P0411 Project System Impact Study
2008 Winter Peak Base Case
P0411 @ 166.4MW
Humboldt Bay PP - Bumboldt #1 60kV line outage
3 ph 6 cyc flt @ Humboldt Bay PP 60kV bus & clr HBay-Humb #1 60kV line

P0411 Project System Impact Study

Selected WECC Bus Voltage Plots

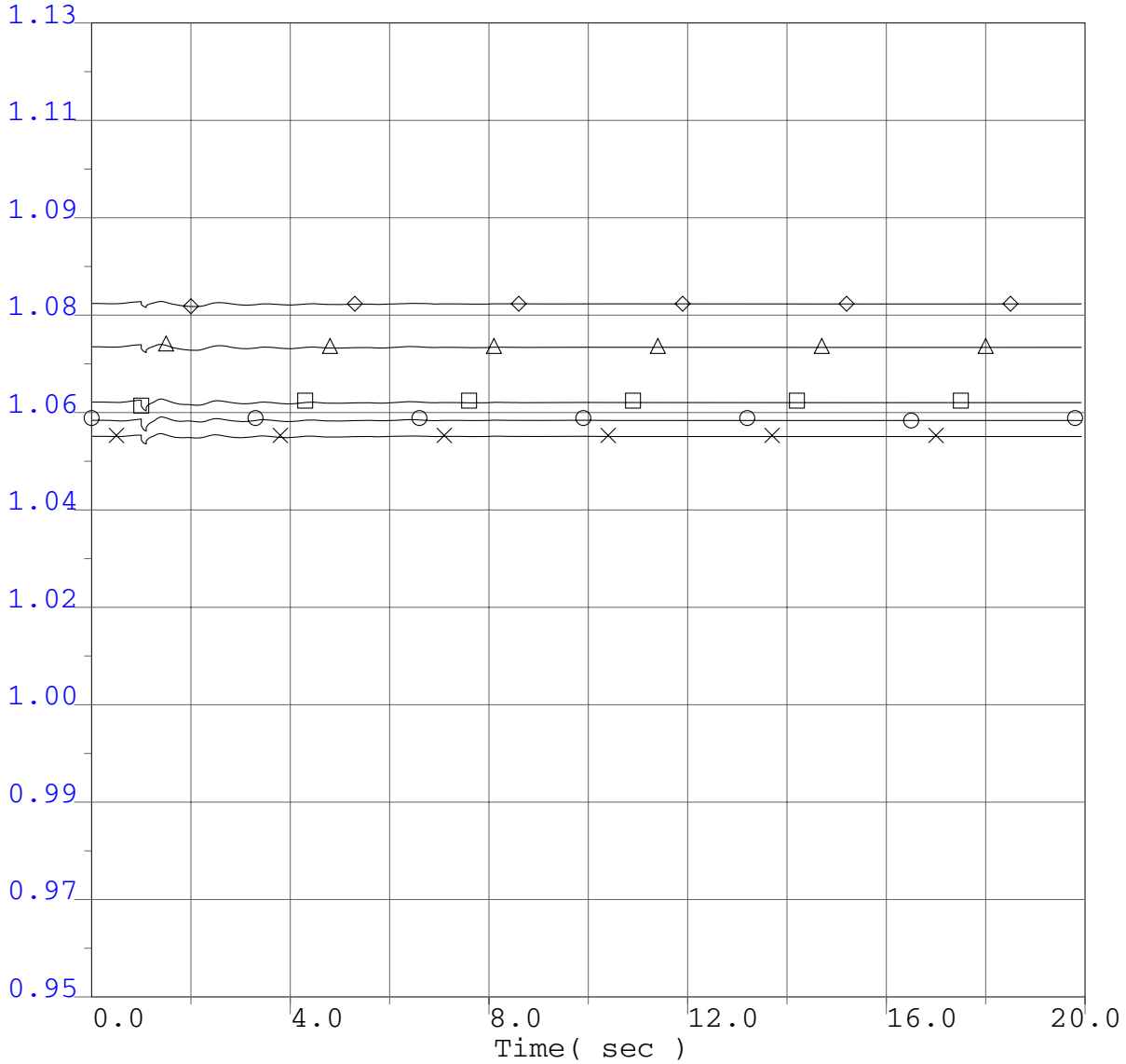

○	0.95	vbus	30042	METCALF	500.0	"*"	1	1.13
×	0.95	vbus	30045	MOSSLAND	500.0	"*"	1	1.13
□	0.95	vbus	30050	LOSBANOS	500.0	"*"	1	1.13
△	0.95	vbus	30055	GATES	500.0	"*"	1	1.13
◇	0.95	vbus	30060	MIDWAY	500.0	"*"	1	1.13

P0411 Project System Impact Study
2008 Winter Peak Base Case
P0411 @ 166.4MW
Humboldt Bay PP - Bumboldt #1 60kV line outage
3 ph 6 cyc flt @ Humboldt Bay PP 60kV bus & clr HBay-Humb #1 60kV line

P0411 Project System Impact Study

Selected WECC Bus Voltage Plots

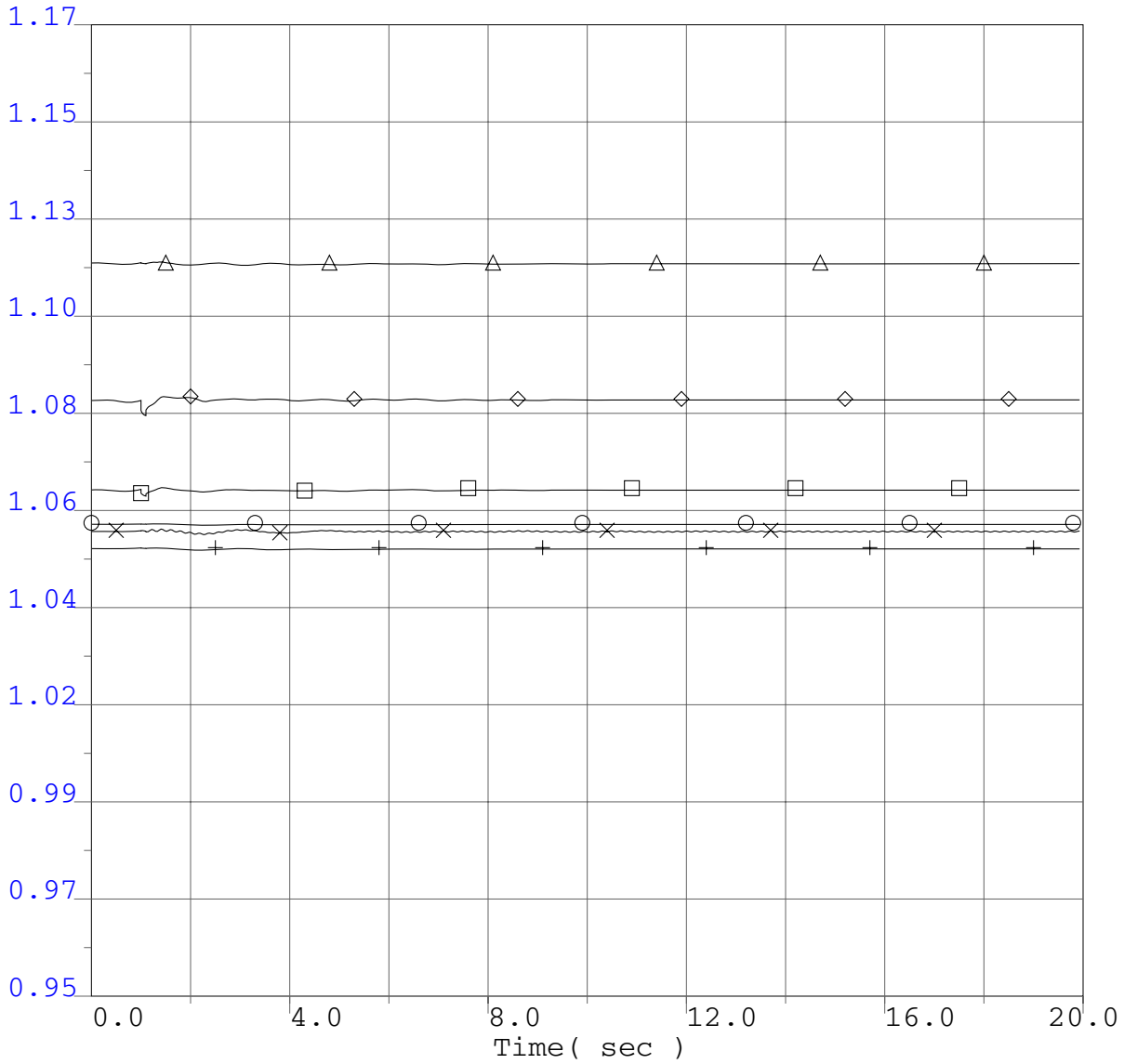

○ 0.95	vbus	14001	FOURCORN	500.0	"*"	1	1.17
× 0.95	vbus	50703	NIC500	500.0	"*"	1	1.17
□ 0.95	vbus	60240	MIDPOINT	500.0	"*"	1	1.17
△ 0.95	vbus	62012	TOWN2	500.0	"*"	1	1.17
◇ 0.95	vbus	40687	MALIN	500.0	"*"	1	1.17
+ 0.95	vbus	66340	SIGURD	345.0	"*"	1	1.17

P0411 Project System Impact Study
2008 Winter Peak Base Case
P0411 @ 166.4MW
Humboldt Bay PP - Bumboldt #1 60kV line outage
3 ph 6 cyc flt @ Humboldt Bay PP 60kV bus & clr HBay-Humb #1 60kV line

P0411 Project System Impact Study

Selected WECC Bus Voltage Plots

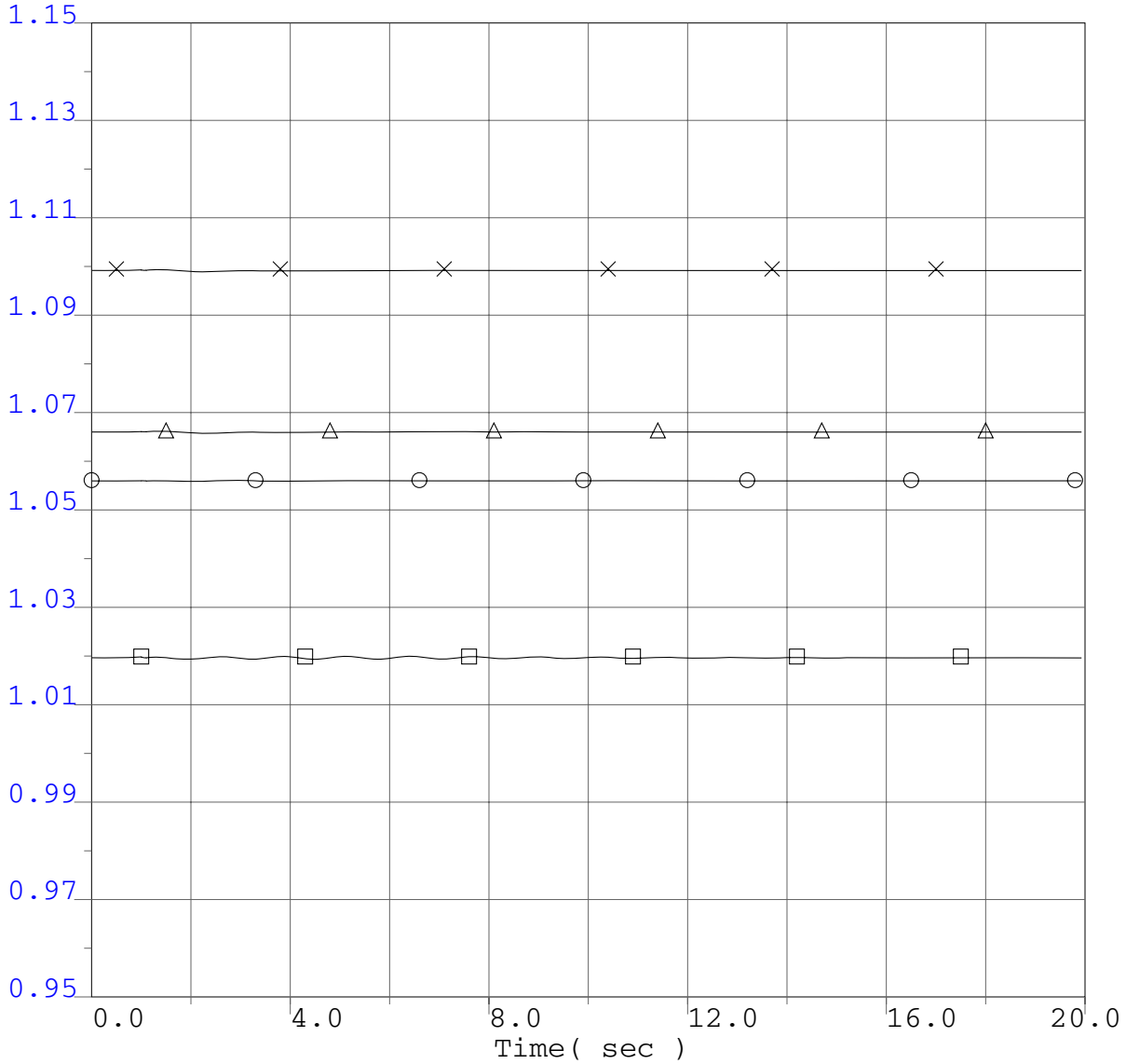

○ 0.95	vbus	54150	LANGDON2	500.0	"*"	1	1.15
× 0.95	vbus	14003	NAVAJO	500.0	"*"	1	1.15
□ 0.95	vbus	24153	VESTAL	230.0	"*"	1	1.15
△ 0.95	vbus	22360	IMPRLVLY	500.0	"*"	1	1.15

P0411 Project System Impact Study
2008 Winter Peak Base Case
P0411 @ 166.4MW
Humboldt Bay PP - Bumboldt #1 60kV line outage
3 ph 6 cyc flt @ Humboldt Bay PP 60kV bus & clr HBay-Humb #1 60kV line

P0411 Project System Impact Study

Selected WECC Bus Frequency Plots

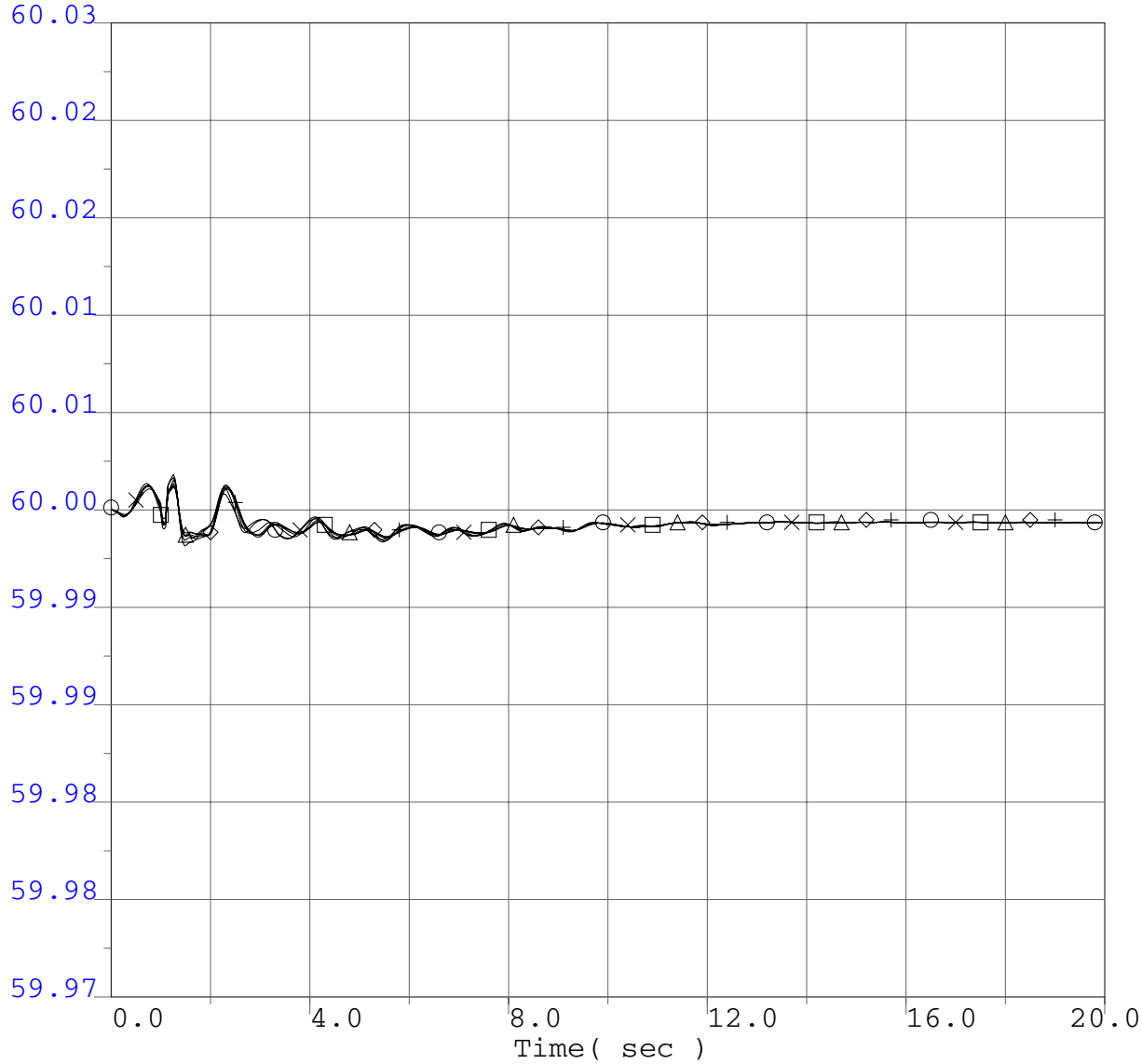

○	59.97	fbus	40687	MALIN	500.0	"*" 1	60.03
×	59.97	fbus	30005	ROUND MT	500.0	"*" 1	60.03
□	59.97	fbus	30015	TABLE MT	500.0	"*" 1	60.03
△	59.97	fbus	30030	VACA-DIX	500.0	"*" 1	60.03
◇	59.97	fbus	30040	TESLA	500.0	"*" 1	60.03
+	59.97	fbus	30035	TRACY	500.0	"*" 1	60.03

P0411 Project System Impact Study
2008 Winter Peak Base Case
P0411 @ 166.4MW
Humboldt Bay PP - Bumboldt #1 60kV line outage
3 ph 6 cyc flt @ Humboldt Bay PP 60kV bus & clr HBay-Humb #1 60kV line

P0411 Project System Impact Study

Selected WECC Bus Frequency Plots

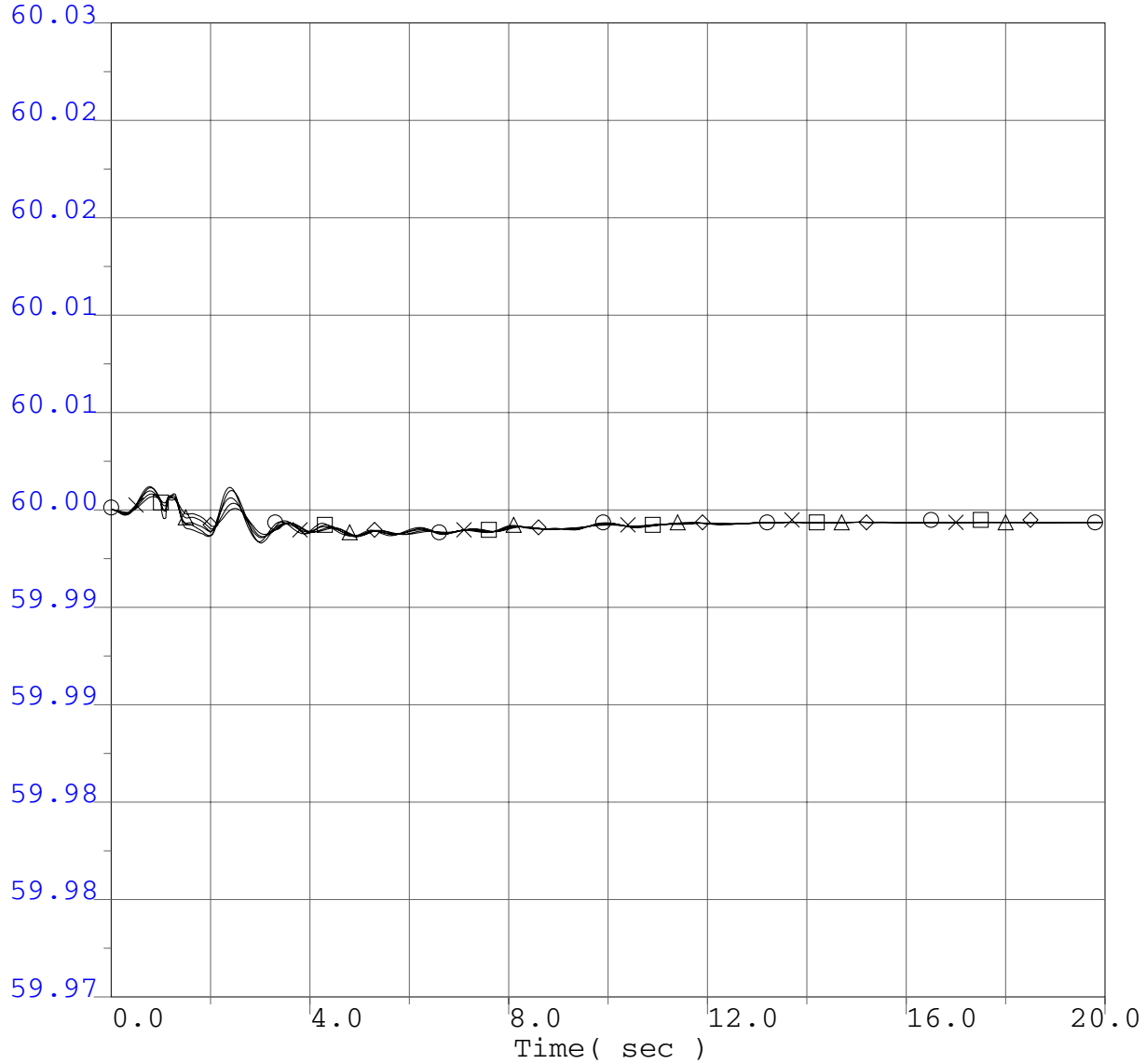

○ 59.97	fbus	30042	METCALF	500.0	"*"	1	60.03
× 59.97	fbus	30045	MOSSLAND	500.0	"*"	1	60.03
□ 59.97	fbus	30050	LOSBANOS	500.0	"*"	1	60.03
△ 59.97	fbus	30055	GATES	500.0	"*"	1	60.03
◇ 59.97	fbus	30060	MIDWAY	500.0	"*"	1	60.03

P0411 Project System Impact Study
2008 Winter Peak Base Case
P0411 @ 166.4MW
Humboldt Bay PP - Bumboldt #1 60kV line outage
3 ph 6 cyc flt @ Humboldt Bay PP 60kV bus & clr HBay-Humb #1 60kV line

P0411 Project System Impact Study

Selected WECC Bus Frequency Plots

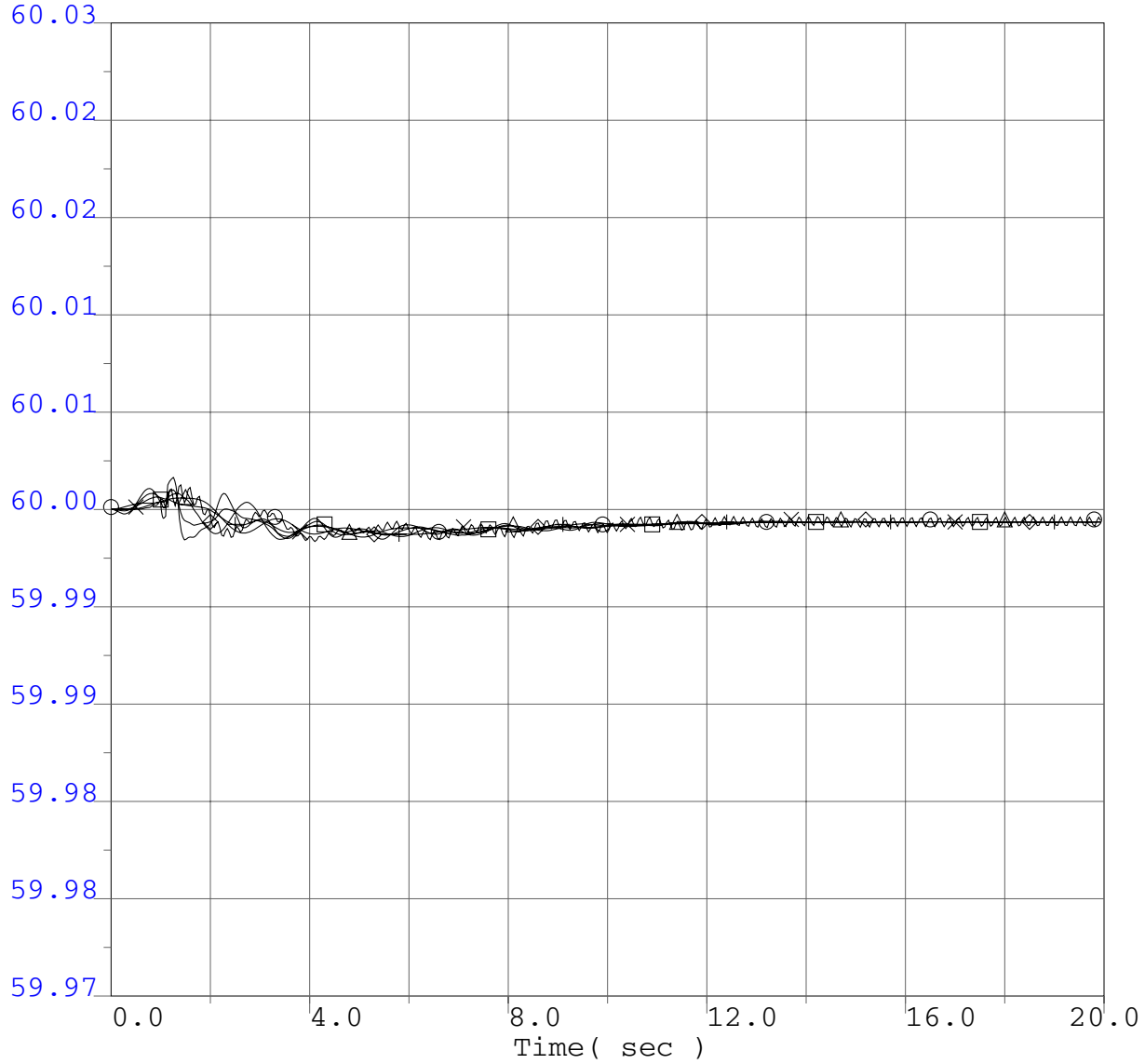

○ 59.97	fbus	14001	FOURCORN	500.0	"*"	1	60.03
× 59.97	fbus	50703	NIC500	500.0	"*"	1	60.03
□ 59.97	fbus	60240	MIDPOINT	500.0	"*"	1	60.03
△ 59.97	fbus	62012	TOWN2	500.0	"*"	1	60.03
◇ 59.97	fbus	40687	MALIN	500.0	"*"	1	60.03
+ 59.97	fbus	66340	SIGURD	345.0	"*"	1	60.03

P0411 Project System Impact Study
2008 Winter Peak Base Case
P0411 @ 166.4MW
Humboldt Bay PP - Bumboldt #1 60kV line outage
3 ph 6 cyc flt @ Humboldt Bay PP 60kV bus & clr HBay-Humb #1 60kV line

P0411 Project System Impact Study

Selected WECC Bus Frequency Plots

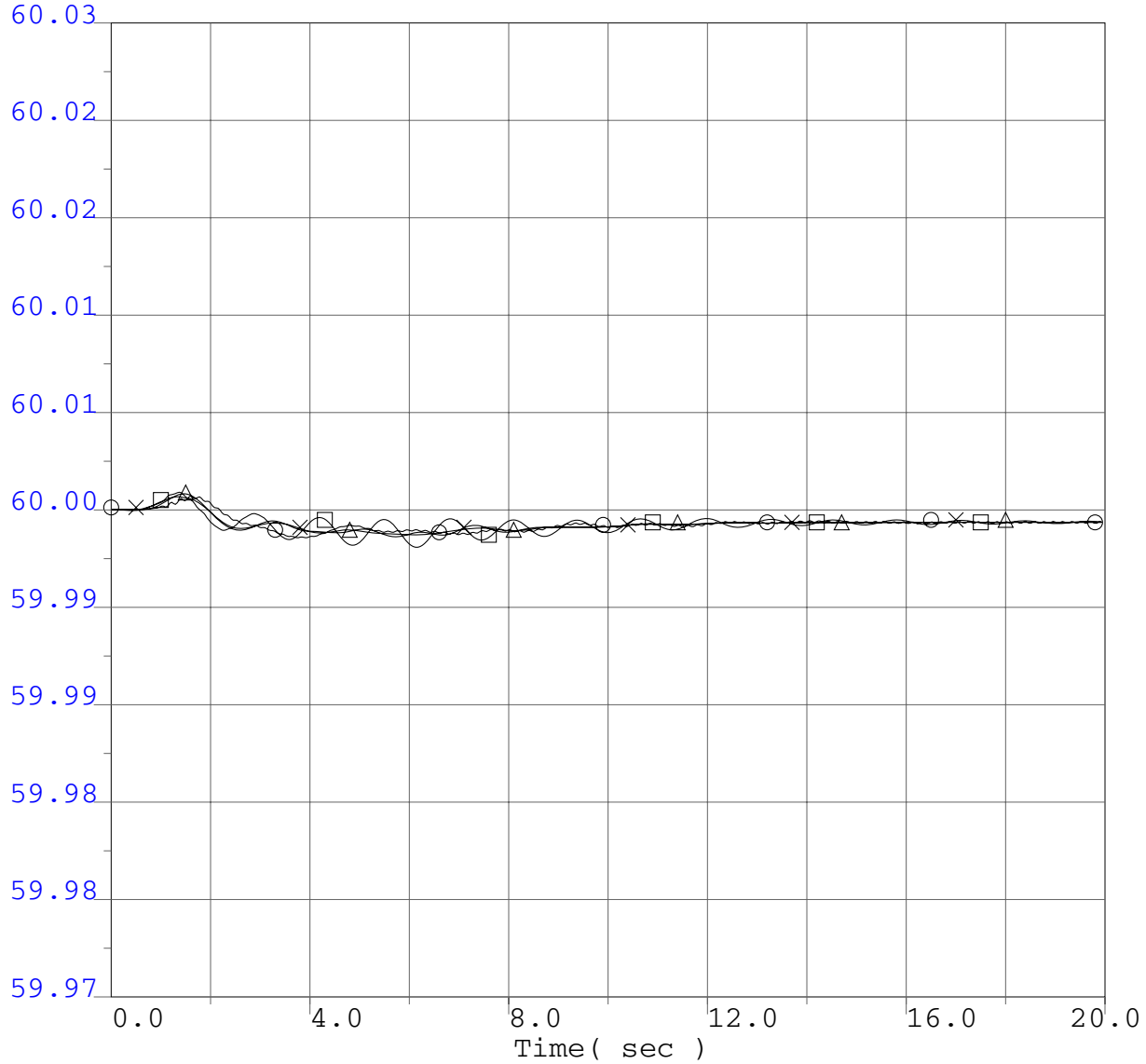

○ 59.97	fbus	54150	LANGDON2	500.0	"*"	1	60.03
× 59.97	fbus	14003	NAVAJO	500.0	"*"	1	60.03
□ 59.97	fbus	24153	VESTAL	230.0	"*"	1	60.03
△ 59.97	fbus	22360	IMPRLVLY	500.0	"*"	1	60.03

P0411 Project System Impact Study
2008 Winter Peak Base Case
P0411 @ 166.4MW
Humboldt Bay PP - Bumboldt #1 60kV line outage
3 ph 6 cyc flt @ Humboldt Bay PP 60kV bus & clr HBay-Humb #1 60kV line

P0411 Project System Impact Study

WECC Generator Rotor Angle

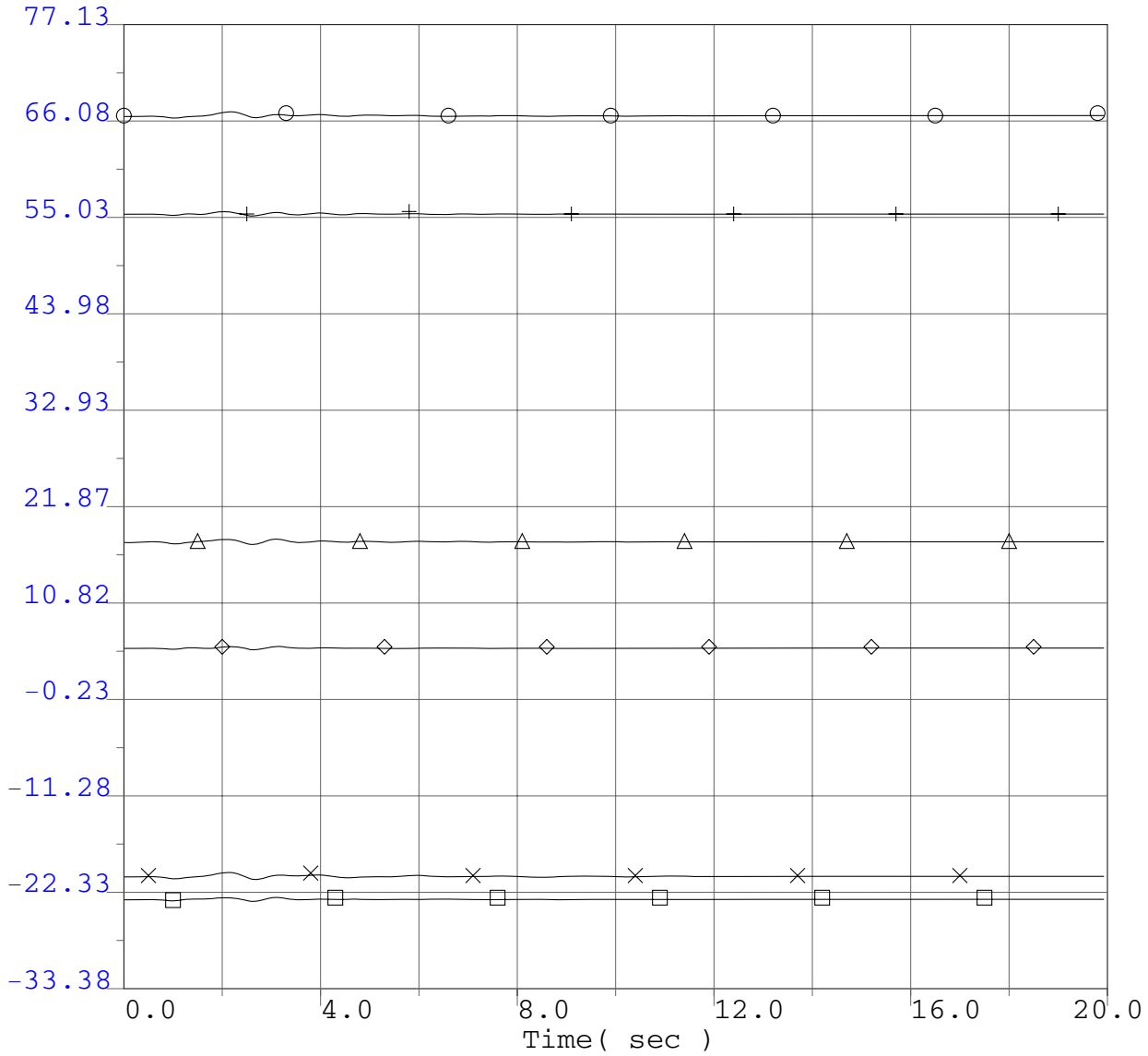

○	-33.38	ang	14914	FCNGN4CC	22.0	"H" 1	77.13
×	-33.38	ang	50500	GMS G6	13.8	"1" 1	77.13
□	-33.38	ang	60100	BRWNL 5	13.8	"1" 1	77.13
△	-33.38	ang	62048	COLSTP 3	26.0	"1" 1	77.13
◇	-33.38	ang	41701	JONDAY01	13.8	"1" 1	77.13
+	-33.38	ang	36411	DIABLO 1	25.0	"1" 1	77.13

P0411 Project System Impact Study
2008 Winter Peak Base Case
P0411 @ 166.4MW
Humboldt Bay PP - Bumboldt #1 60kV line outage
3 ph 6 cyc flt @ Humboldt Bay PP 60kV bus & clr HBay-Humb #1 60kV line

P0411 Project System Impact Study

WECC Generator Rotor Angle

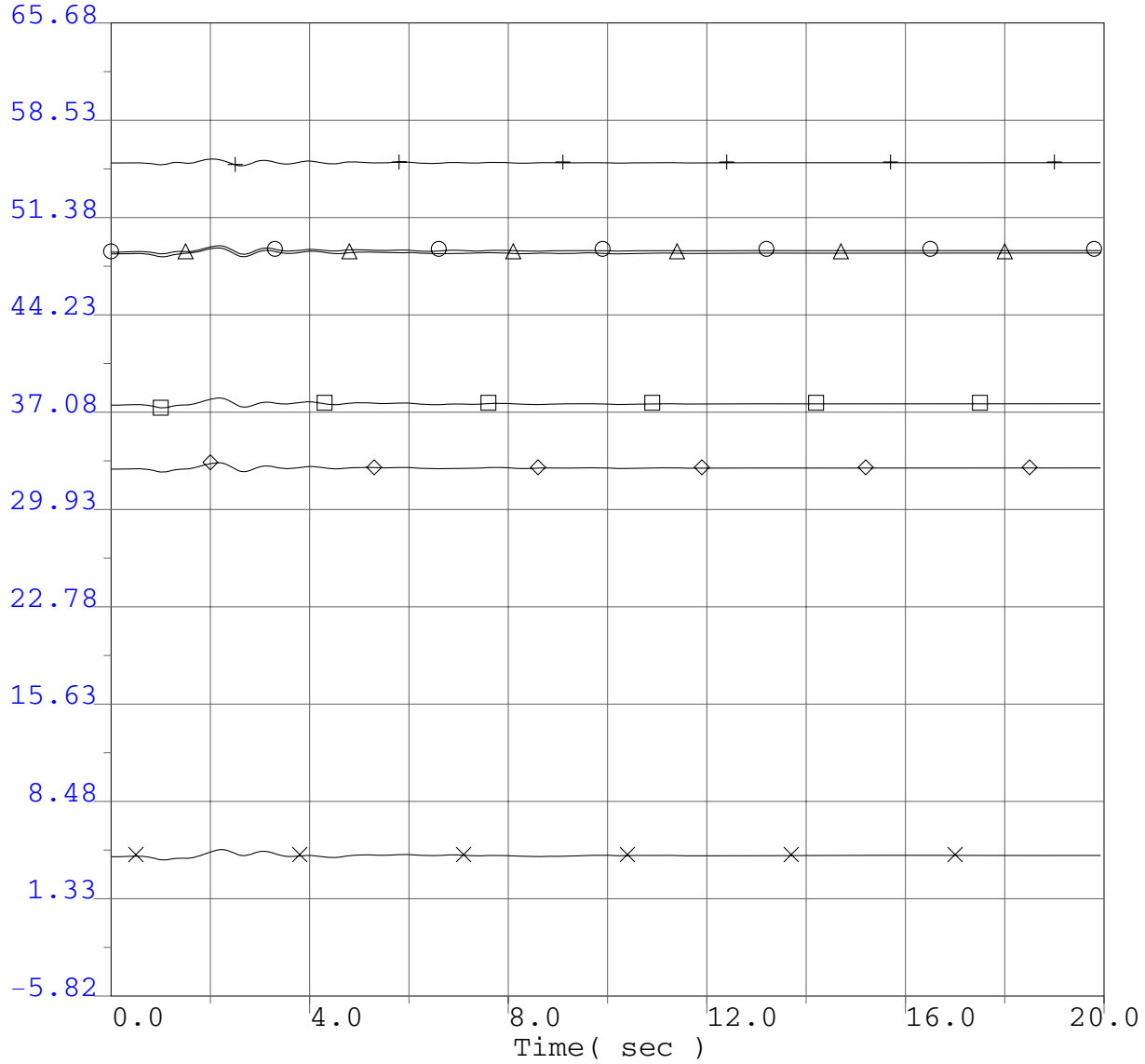

○	-5.82	ang	65490	EHUNTR 1	24.0	"1" 1	65.68
×	-5.82	ang	54280	SUND#2GN	18.0	"2" 1	65.68
□	-5.82	ang	79151	GLENC3-4	13.8	"3" 1	65.68
△	-5.82	ang	24130	S.ONOFR3	22.0	"3" 1	65.68
◇	-5.82	ang	22244	ENCINA 5	24.0	"1" 1	65.68
+	-5.82	ang	36411	DIABLO 1	25.0	"1" 1	65.68

P0411 Project System Impact Study
2008 Winter Peak Base Case
P0411 @ 166.4MW
Humboldt Bay PP - Bumboldt #1 60kV line outage
3 ph 6 cyc flt @ Humboldt Bay PP 60kV bus & clr HBay-Humb #1 60kV line

P0411 Project System Impact Study

Selected PG&E Transmission Line Flows (MW)

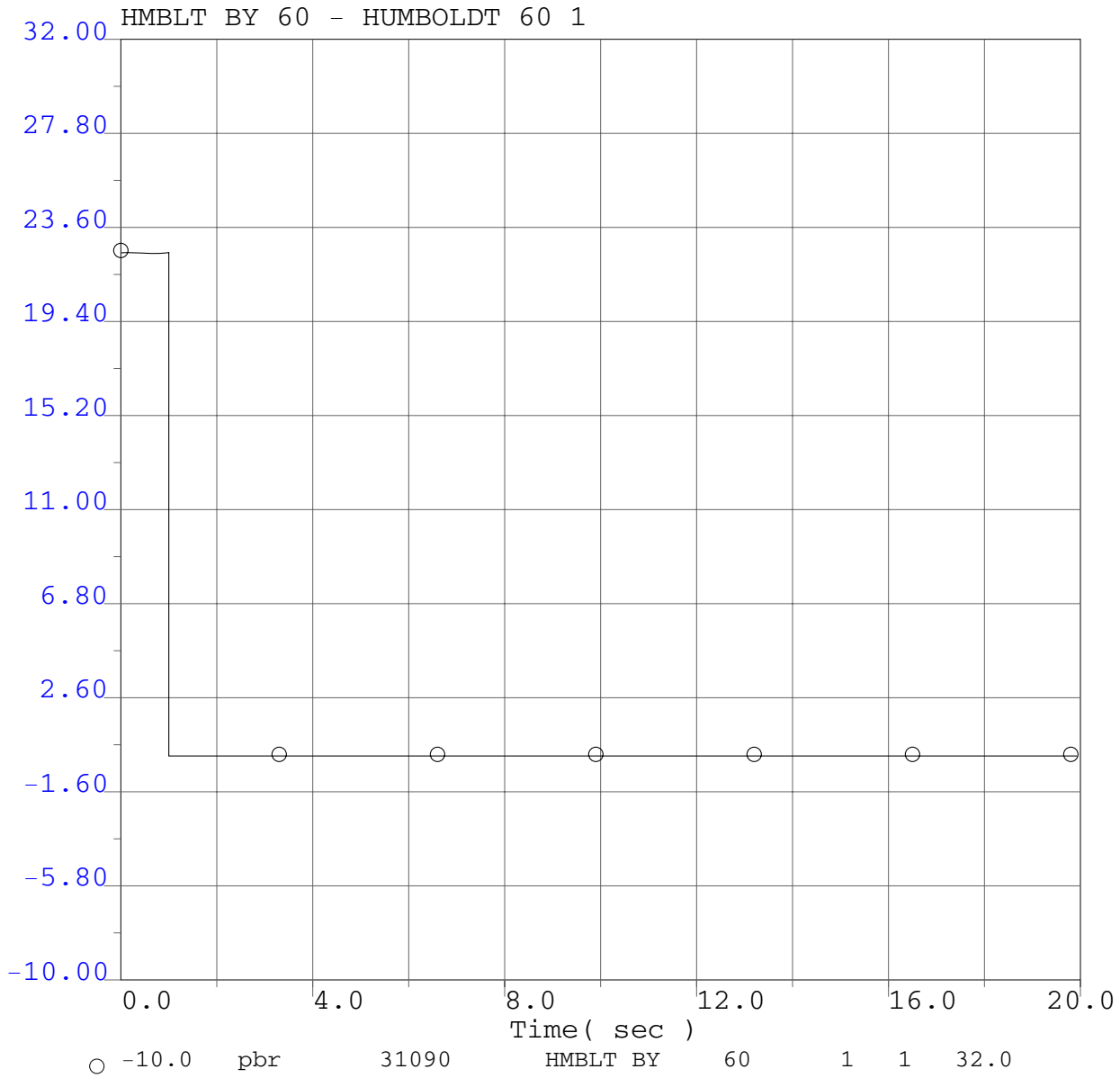

P0411 Project System Impact Study
2008 Winter Peak Base Case
P0411 @ 166.4MW
Humboldt Bay PP - Bumboldt #1 60kV line outage
3 ph 6 cyc flt @ Humboldt Bay PP 60kV bus & clr HBay-Humb #1 60kV line

P0411 Project System Impact Study

Selected PG&E Transmission Line Flows (MW)

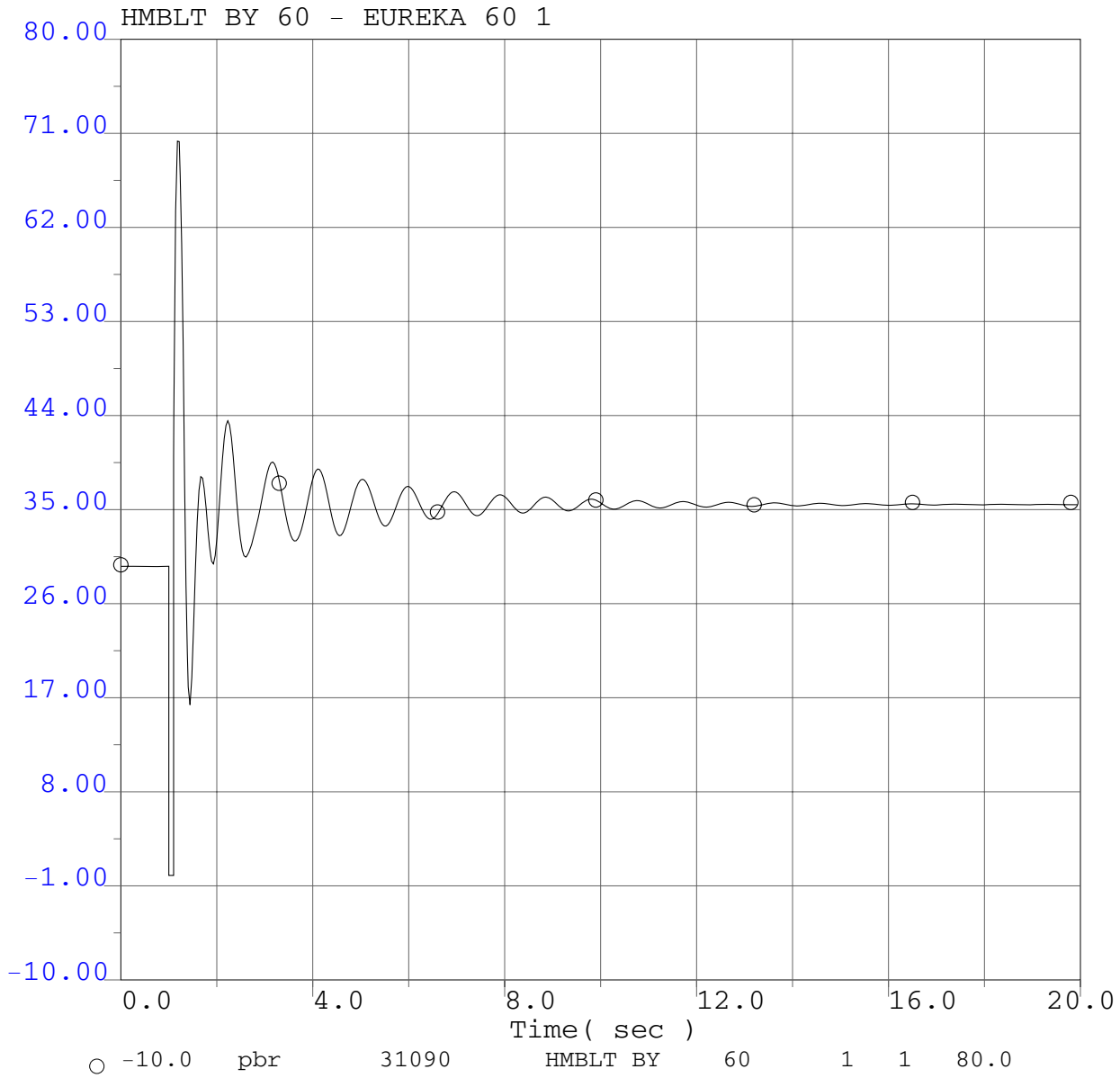

P0411 Project System Impact Study
2008 Winter Peak Base Case
P0411 @ 166.4MW
Humboldt Bay PP - Bumboldt #1 60kV line outage
3 ph 6 cyc flt @ Humboldt Bay PP 60kV bus & clr HBay-Humb #1 60kV line

P0411 Project System Impact Study

Selected PG&E Transmission Line Flows (MW)

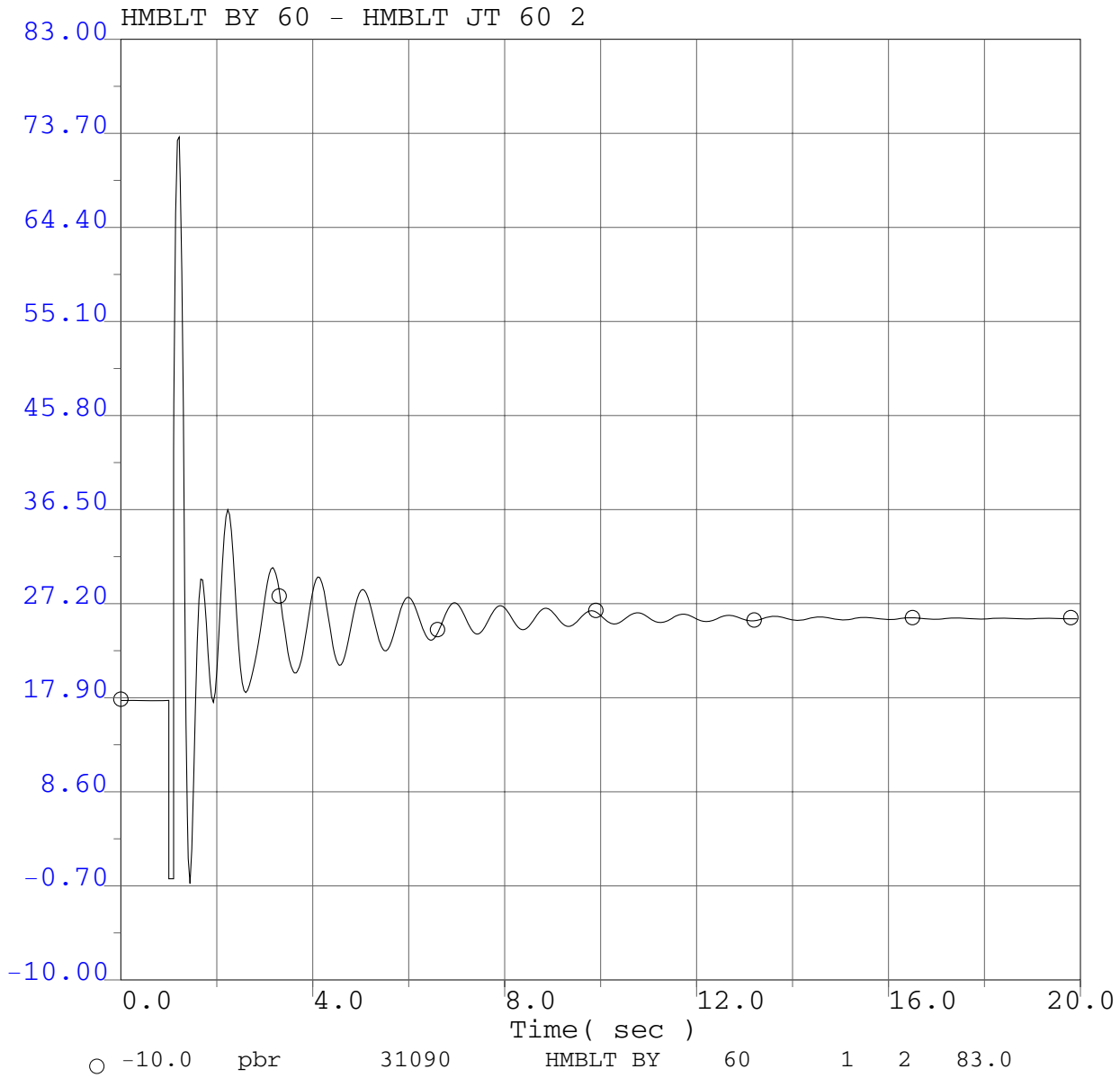

P0411 Project System Impact Study
2008 Winter Peak Base Case
P0411 @ 166.4MW
Humboldt Bay PP - Bumboldt #1 60kV line outage
3 ph 6 cyc flt @ Humboldt Bay PP 60kV bus & clr HBay-Humb #1 60kV line

P0411 Project System Impact Study

Selected PG&E Transmission Line Flows (MW)

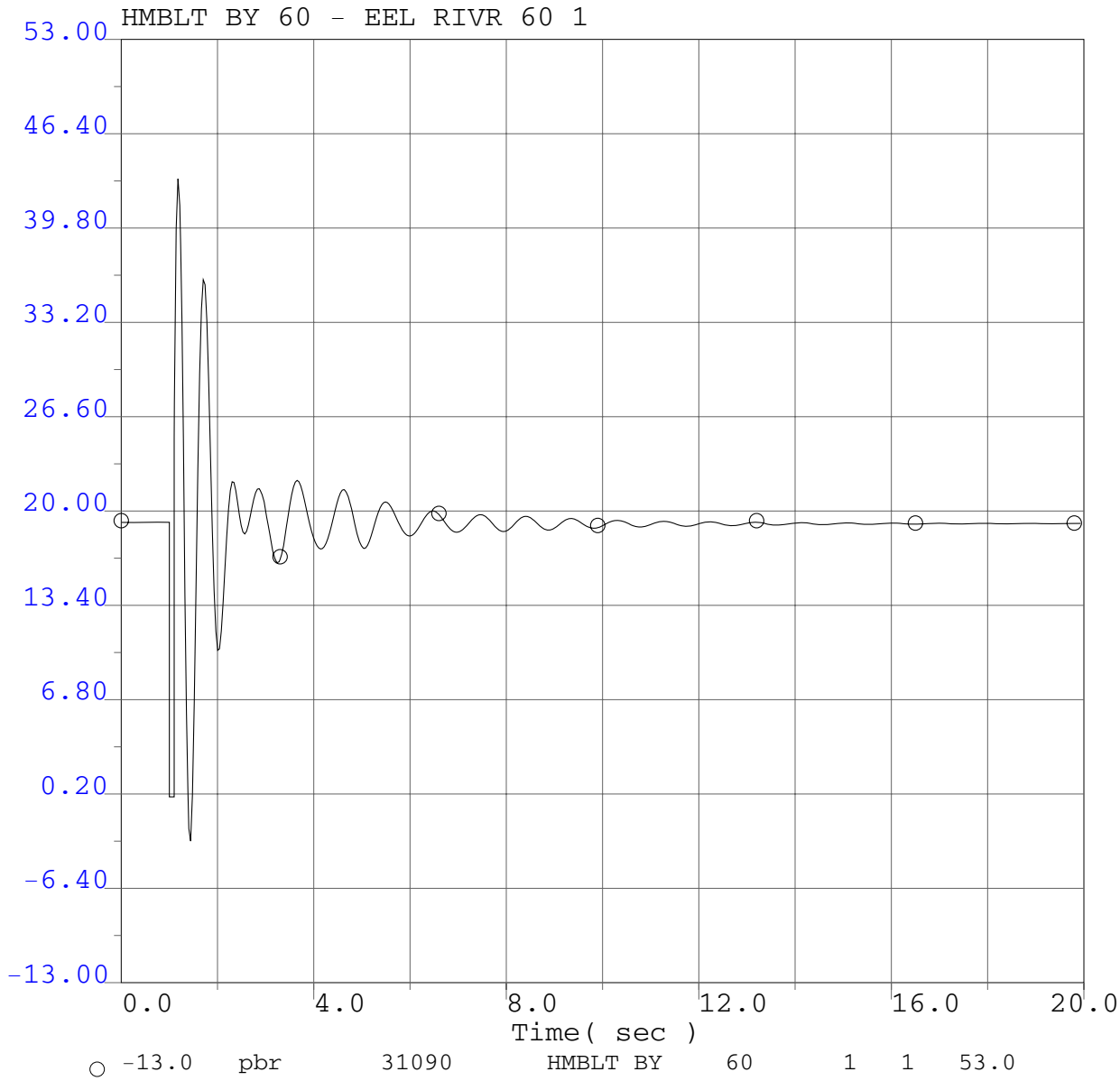

P0411 Project System Impact Study
2008 Winter Peak Base Case
P0411 @ 166.4MW
Humboldt Bay PP - Bumboldt #1 60kV line outage
3 ph 6 cyc flt @ Humboldt Bay PP 60kV bus & clr HBay-Humb #1 60kV line

P0411 Project System Impact Study

Selected PG&E Transmission Line Flows (MW)

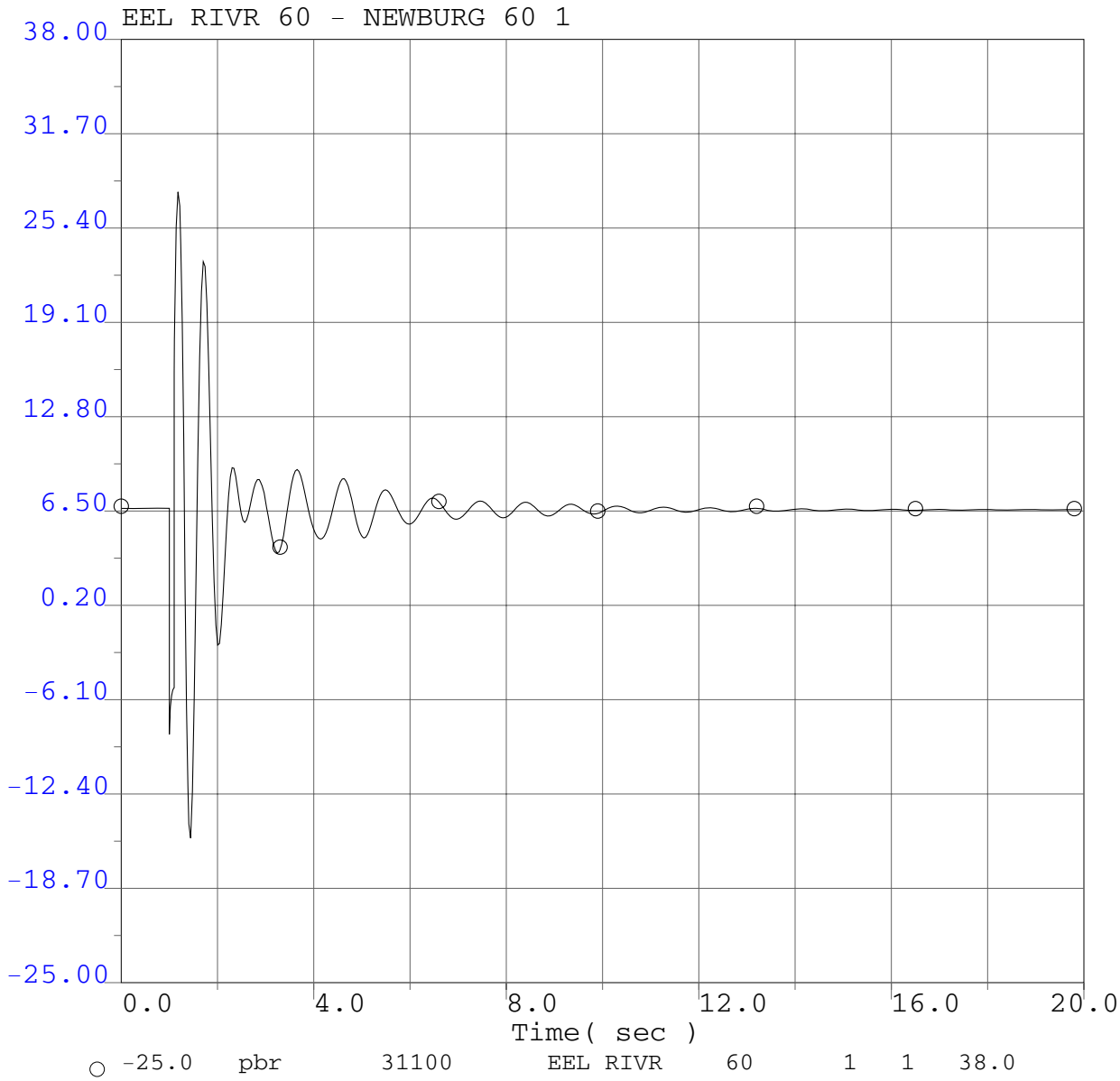

P0411 Project System Impact Study
2008 Winter Peak Base Case
P0411 @ 166.4MW
Humboldt Bay PP - Bumboldt #1 60kV line outage
3 ph 6 cyc flt @ Humboldt Bay PP 60kV bus & clr HBay-Humb #1 60kV line

P0411 Project System Impact Study

Selected PG&E Transmission Line Flows (MW)

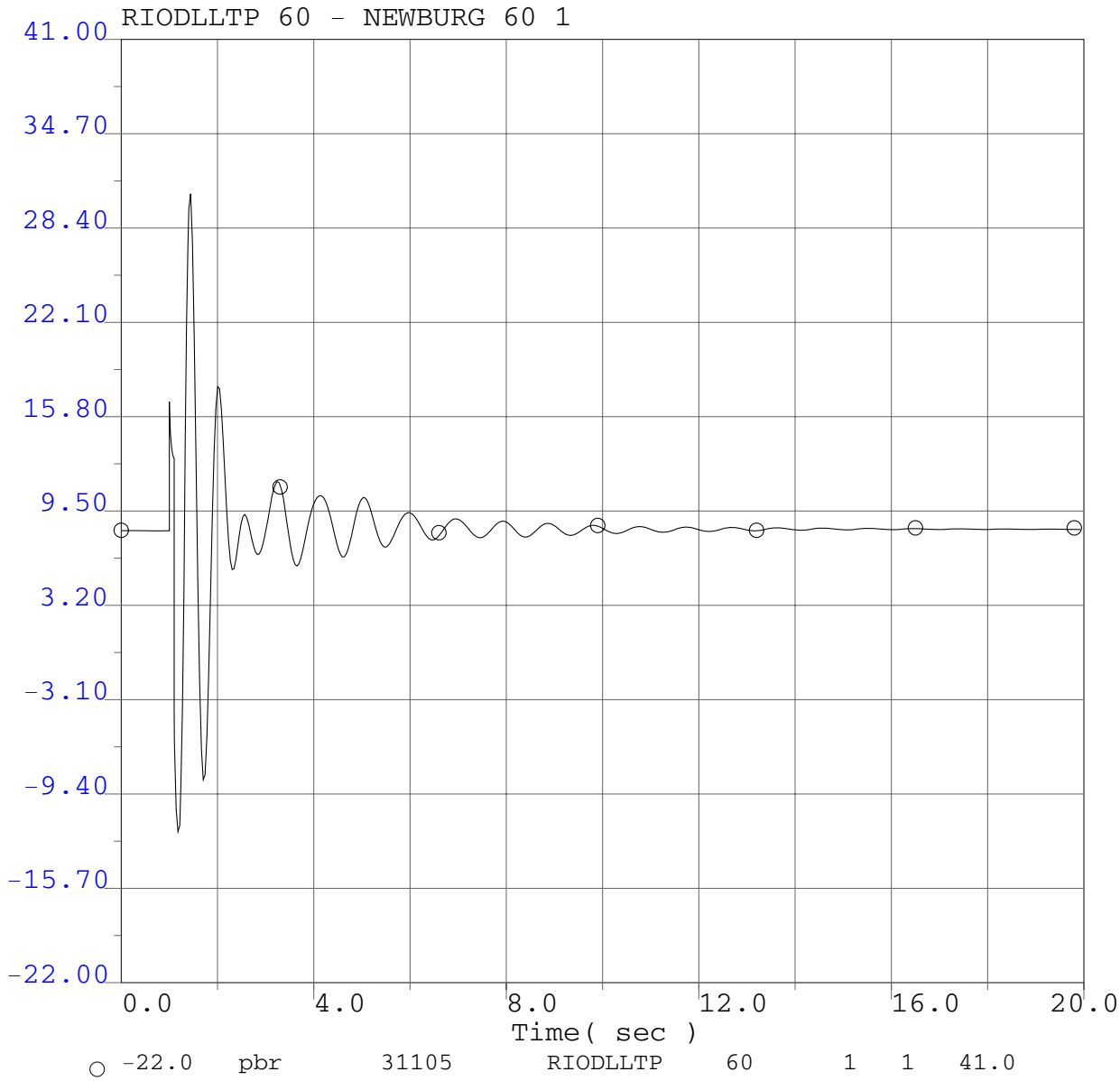

P0411 Project System Impact Study
2008 Winter Peak Base Case
P0411 @ 166.4MW
Humboldt Bay PP - Bumboldt #1 60kV line outage
3 ph 6 cyc flt @ Humboldt Bay PP 60kV bus & clr HBay-Humb #1 60kV line

P0411 Project System Impact Study

Selected PG&E Transmission Line Flows (MW)

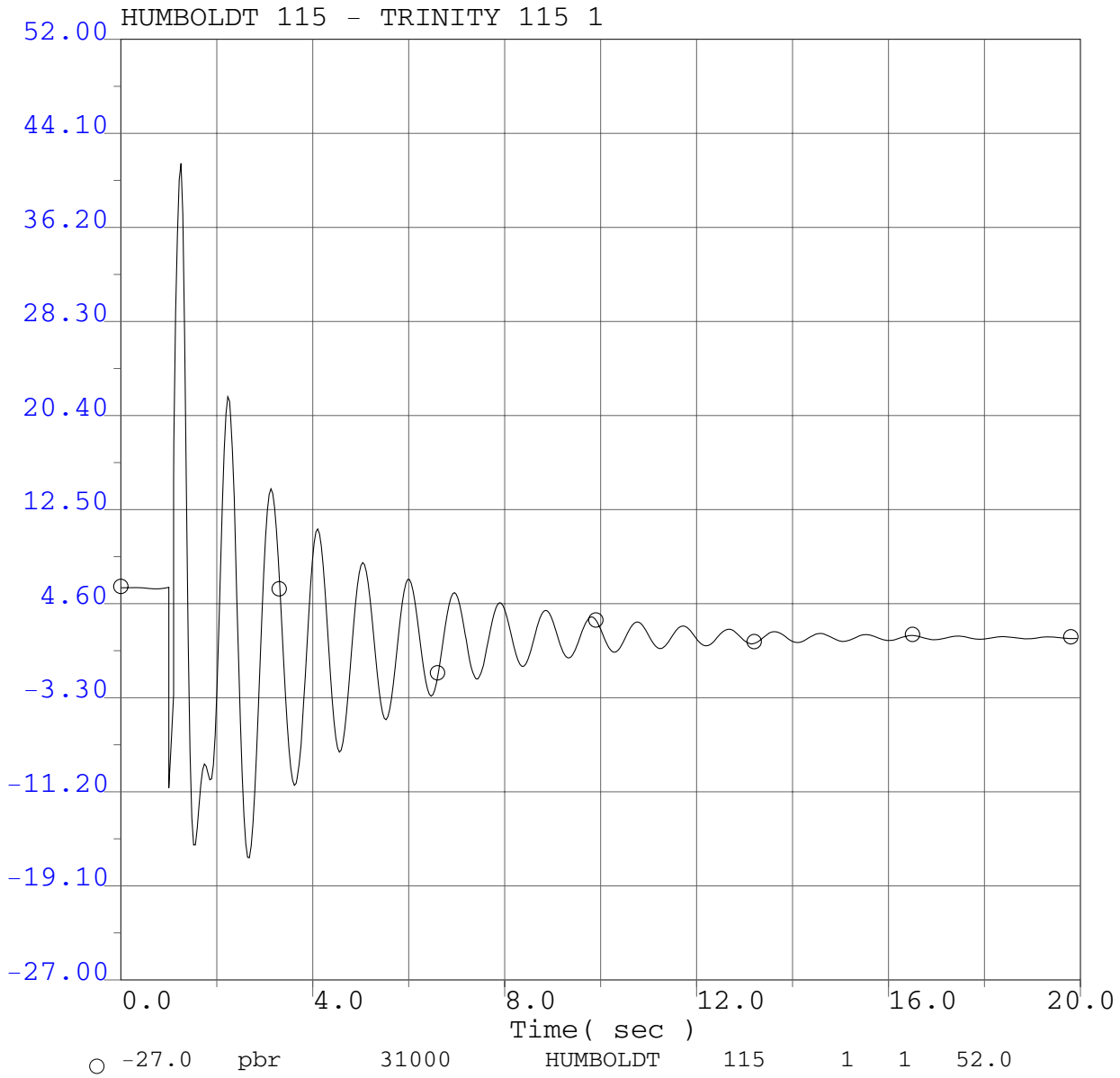

P0411 Project System Impact Study
2008 Winter Peak Base Case
P0411 @ 166.4MW
Humboldt Bay PP - Bumboldt #1 60kV line outage
3 ph 6 cyc flt @ Humboldt Bay PP 60kV bus & clr HBay-Humb #1 60kV line

P0411 Project System Impact Study

Selected PG&E Transmission Line Flows (MW)

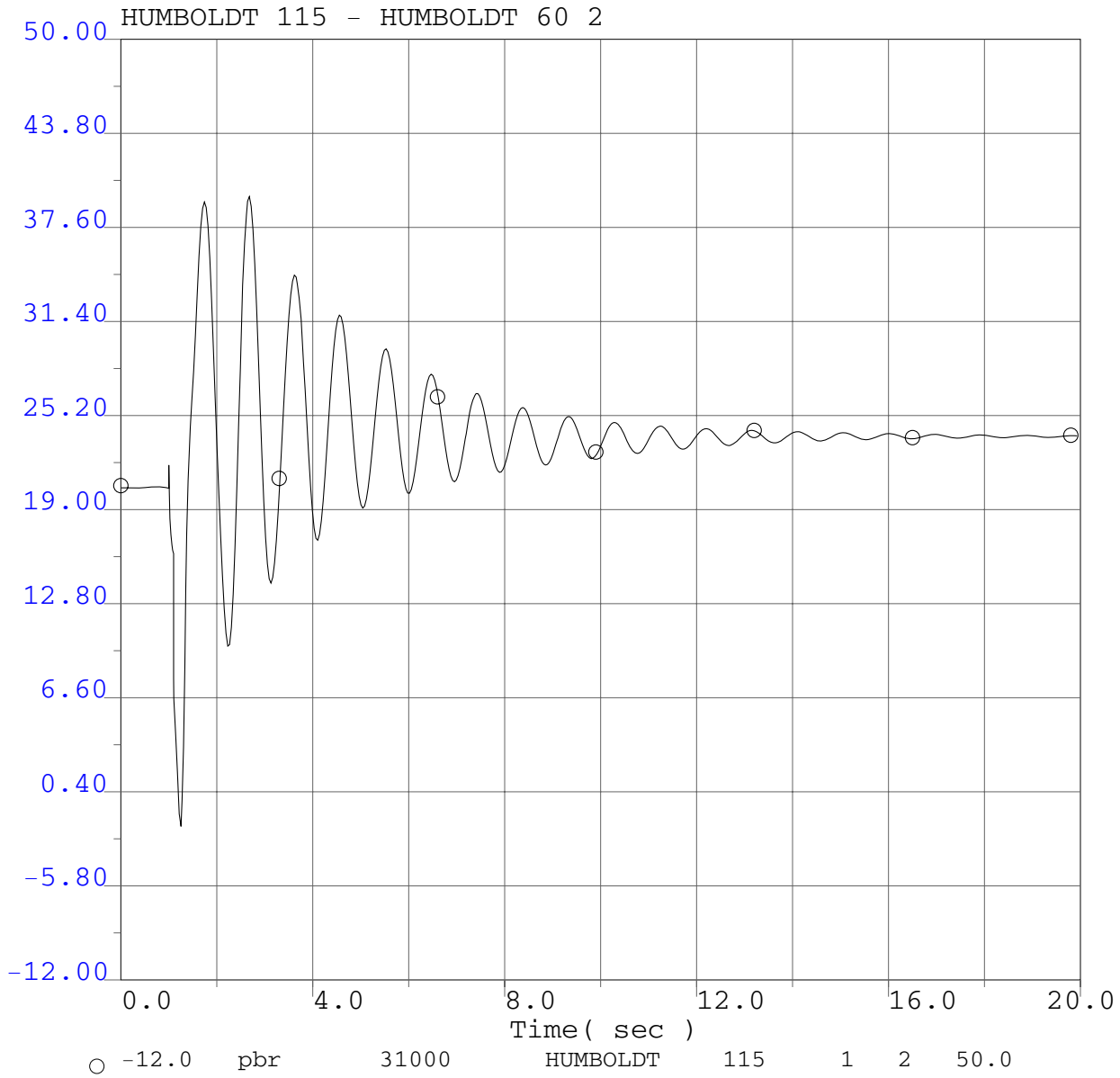

P0411 Project System Impact Study
2008 Winter Peak Base Case
P0411 @ 166.4MW
Humboldt Bay PP - Bumboldt #1 60kV line outage
3 ph 6 cyc flt @ Humboldt Bay PP 60kV bus & clr HBay-Humb #1 60kV line

P0411 Project System Impact Study

Selected PG&E Transmission Line Flows (MW)

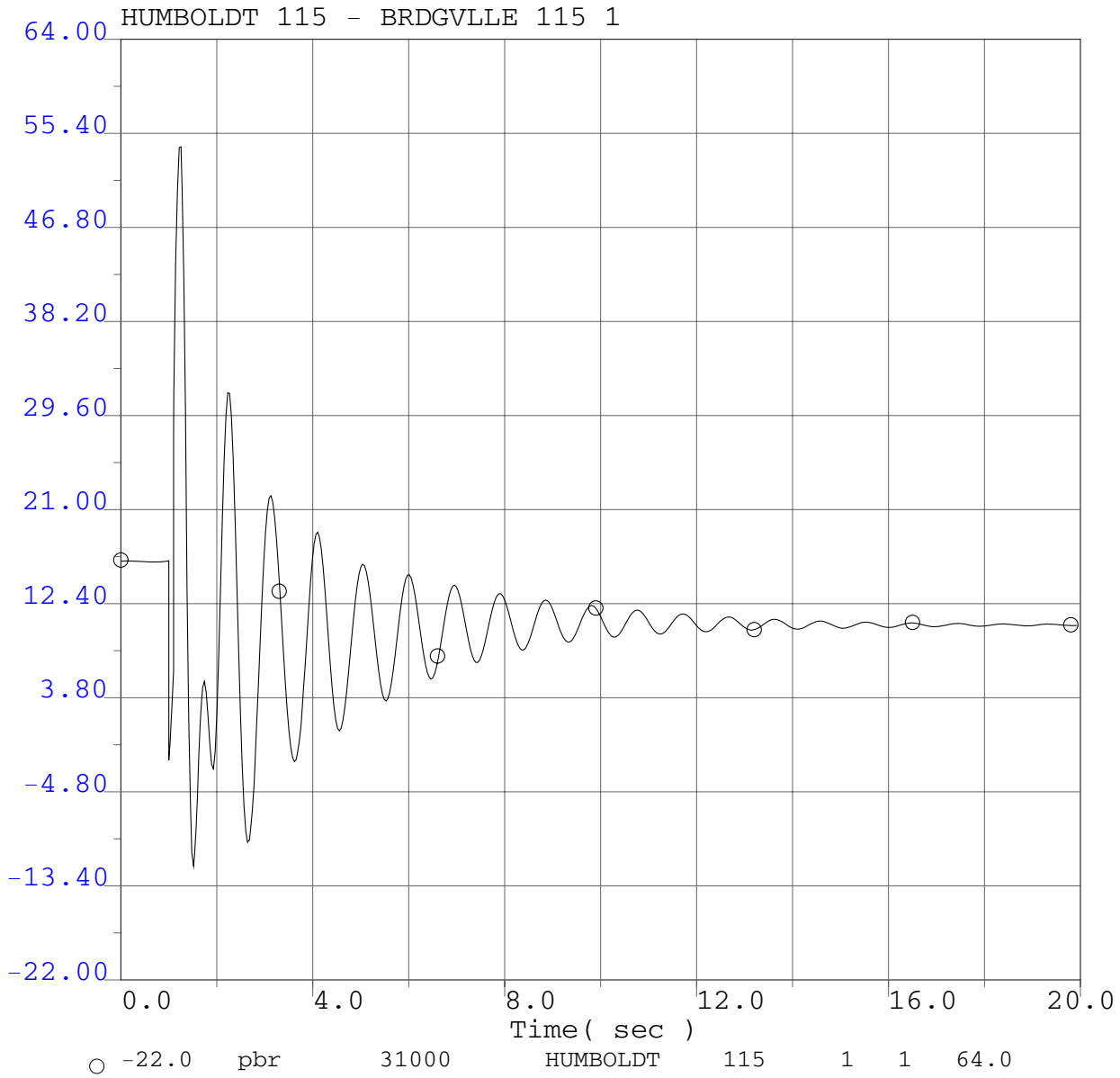

P0411 Project System Impact Study
2008 Winter Peak Base Case
P0411 @ 166.4MW
Humboldt Bay PP - Bumboldt #1 60kV line outage
3 ph 6 cyc flt @ Humboldt Bay PP 60kV bus & clr HBay-Humb #1 60kV line

P0411 Project System Impact Study

Selected PG&E Transmission Line Flows (MW)

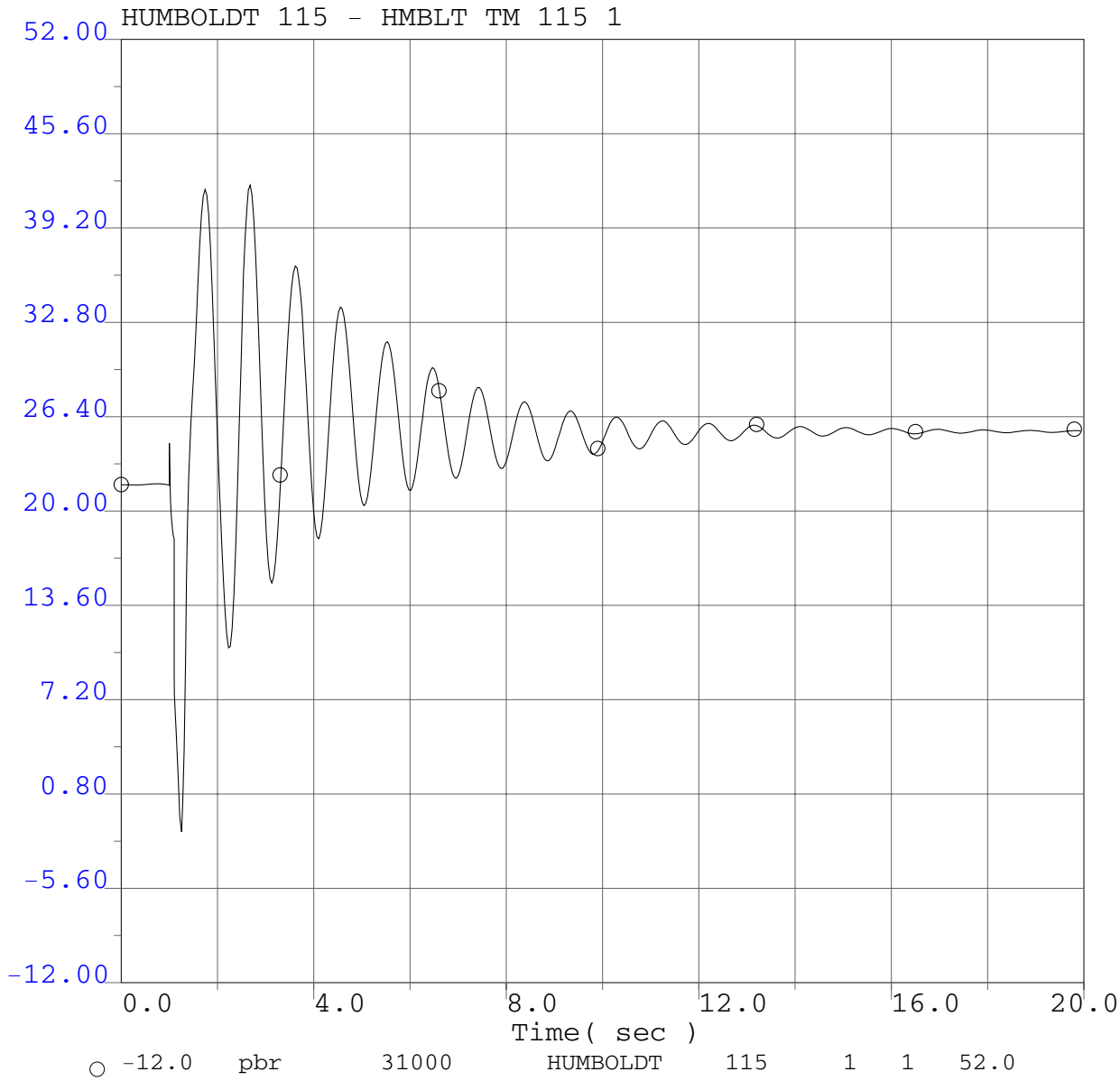

P0411 Project System Impact Study
2008 Winter Peak Base Case
P0411 @ 166.4MW
Humboldt Bay PP - Bumboldt #1 60kV line outage
3 ph 6 cyc flt @ Humboldt Bay PP 60kV bus & clr HBay-Humb #1 60kV line

P0411 Project System Impact Study

Selected PG&E Bus Voltage Plots Adjacent to Fault

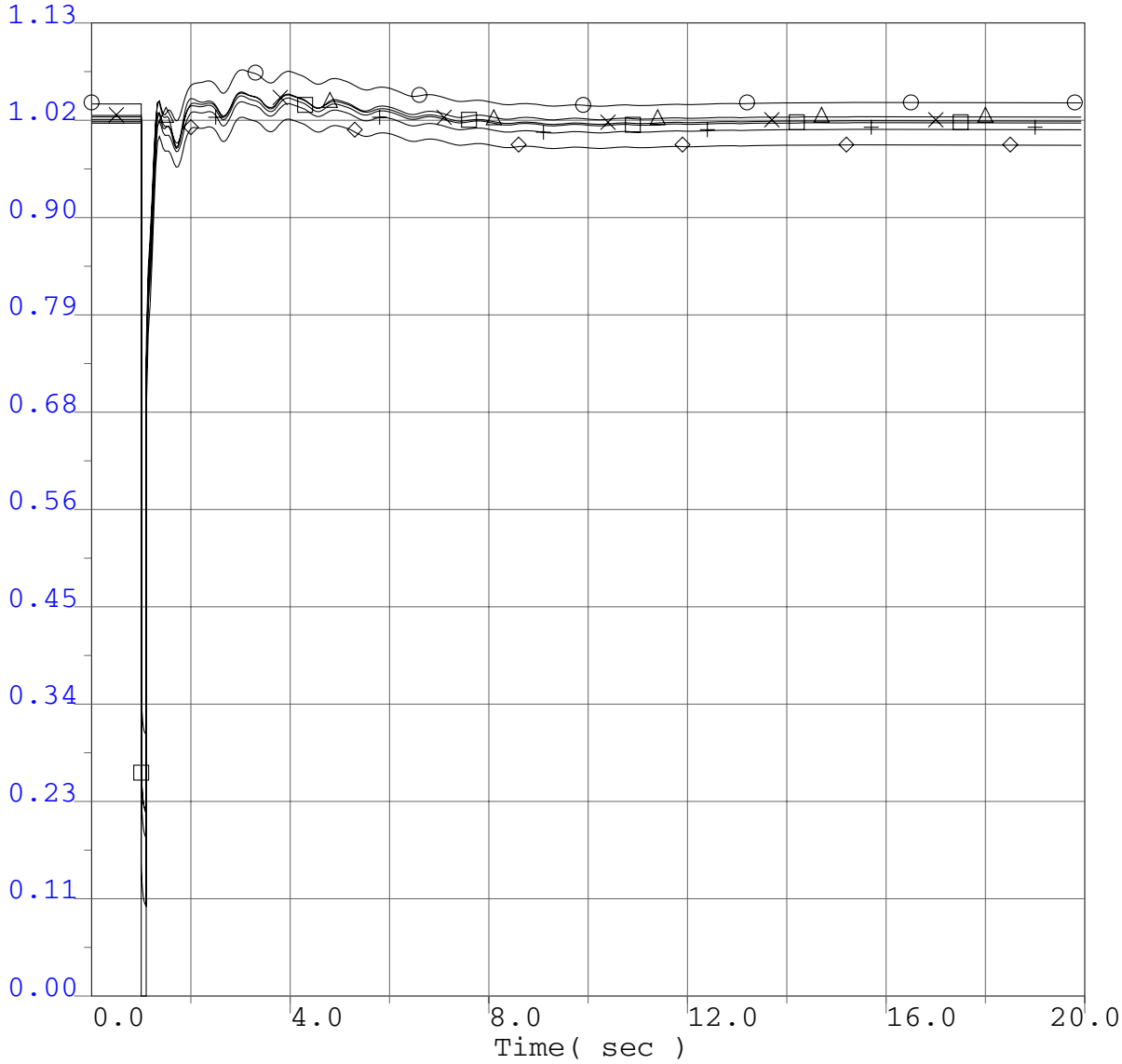

P0411 Project System Impact Study
2008 Winter Peak Base Case
P0411 @ 166.4MW
Humboldt Bay PP - Eureka #1 60kV line outage
3 ph 6 cyc flt @ Humboldt Bay PP 60kV bus & clr HBay-Eureka 60kV line

P0411 Project System Impact Study

Selected PG&E Bus Frequency Plots Adjacent to Fault

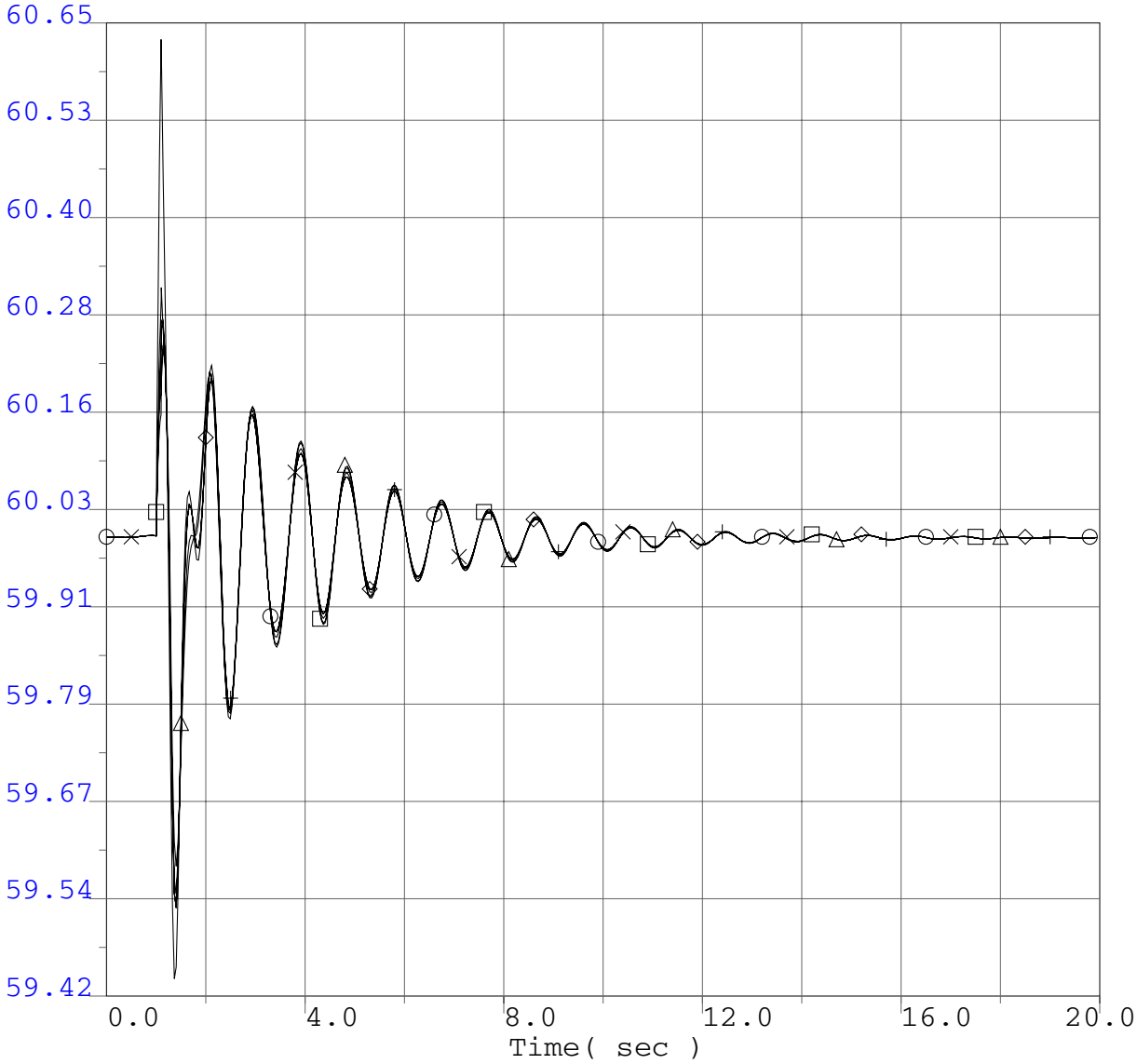

○	59.42	fbul	31090	HMBLT BY	60.0	"*" 1	60.65
×	59.42	fbus	31080	HUMBOLDT	60.0	"*" 1	60.65
□	59.42	fbul	31102	NEWBURG	60.0	"*" 1	60.65
△	59.42	fbus	31105	RIODLLTP	60.0	"*" 1	60.65
◇	59.42	fbul	31086	EUREKA	60.0	"*" 1	60.65
+	59.42	fbul	31082	HARRIS	60.0	"*" 1	60.65

P0411 Project System Impact Study
2008 Winter Peak Base Case
P0411 @ 166.4MW
Humboldt Bay PP - Eureka #1 60kV line outage
3 ph 6 cyc flt @ Humboldt Bay PP 60kV bus & clr HBay-Eureka 60kV line

P0411 Project System Impact Study

Project Generator Terminal Voltages

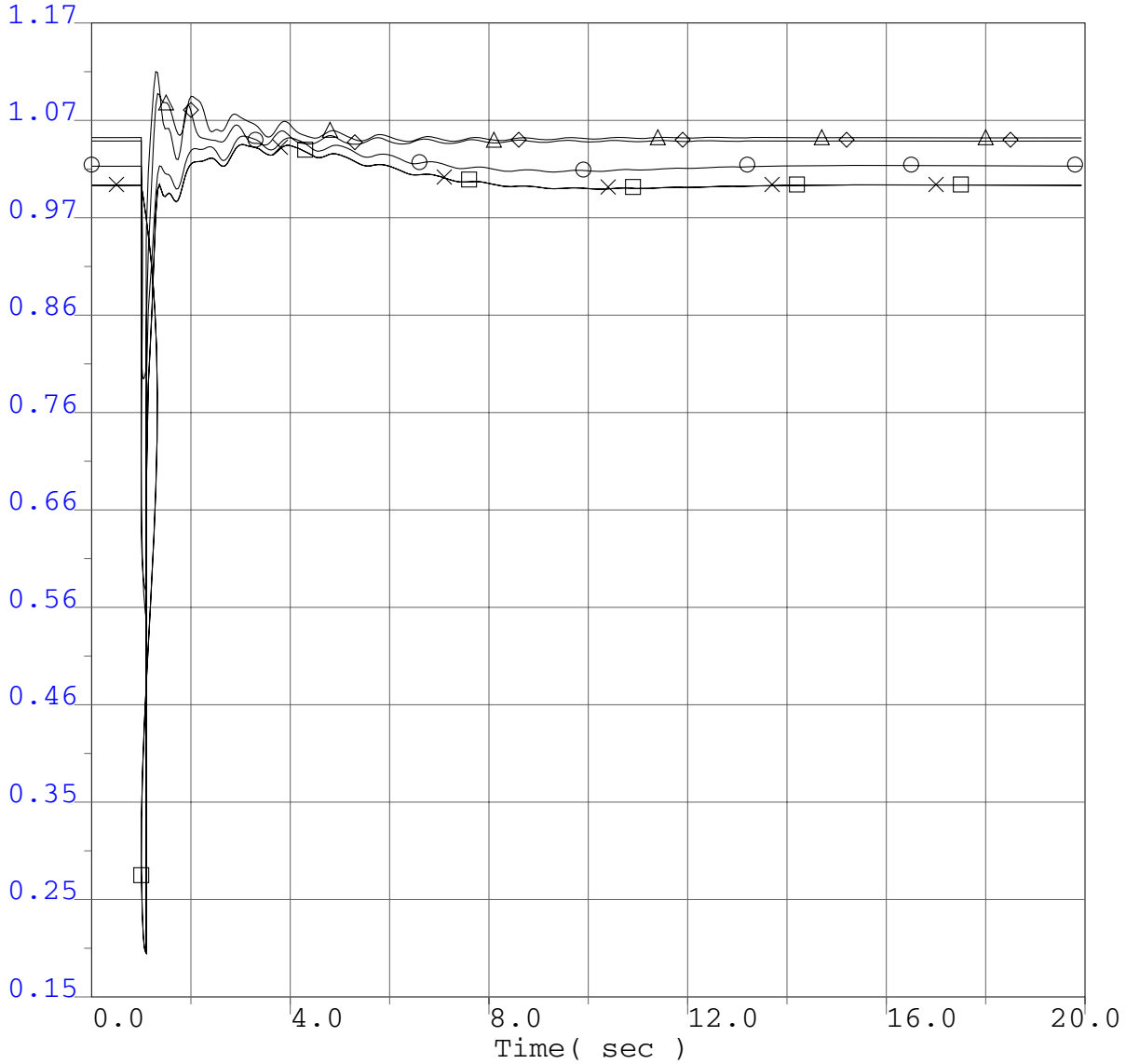

○	0.15	vt	31180	P0411G1	13.8	"1" 1	1.17
×	0.15	vt	31181	P0411G2	13.8	"5" 1	1.17
□	0.15	vt	31182	P0411G3	13.8	"8" 1	1.17
△	0.15	vt	31150	FAIRHAVN	13.8	"1" 1	1.17
◇	0.15	vt	31158	LP SAMOA	12.5	"1" 1	1.17

P0411 Project System Impact Study
2008 Winter Peak Base Case
P0411 @ 166.4MW
Humboldt Bay PP - Eureka #1 60kV line outage
3 ph 6 cyc flt @ Humboldt Bay PP 60kV bus & clr HBay-Eureka 60kV line

P0411 Project System Impact Study

Project Generator Rotor Speed

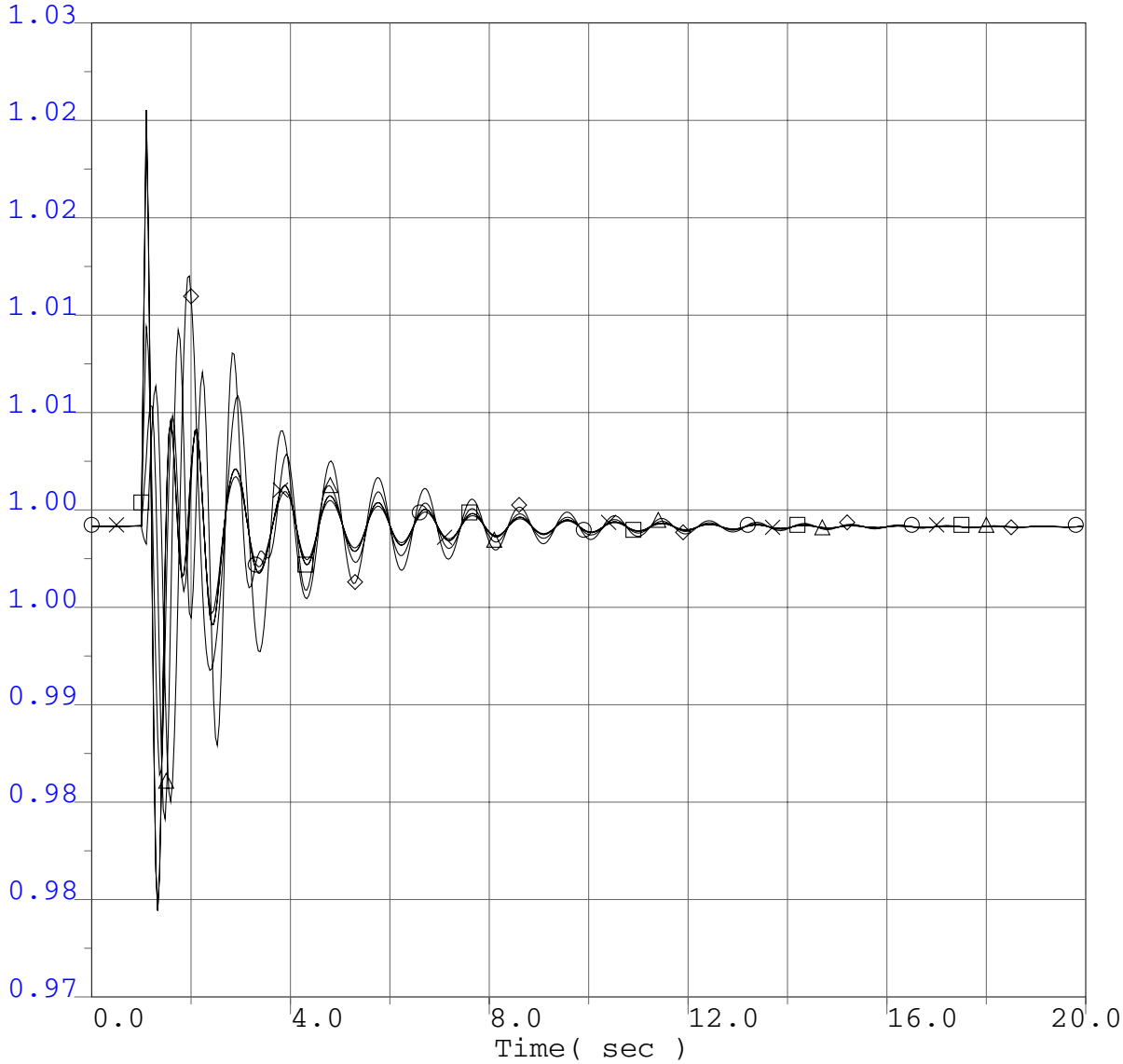

○	0.973	spd	31180	P0411G1	13.8	"1" 1	1.0289
×	0.973	spd	31181	P0411G2	13.8	"5" 1	1.0289
□	0.973	spd	31182	P0411G3	13.8	"8" 1	1.0289
△	0.973	spd	31150	FAIRHAVN	13.8	"1" 1	1.0289
◇	0.973	spd	31158	LP SAMOA	12.5	"1" 1	1.0289

P0411 Project System Impact Study
2008 Winter Peak Base Case
P0411 @ 166.4MW
Humboldt Bay PP - Eureka #1 60kV line outage
3 ph 6 cyc flt @ Humboldt Bay PP 60kV bus & clr HBay-Eureka 60kV line

P0411 Project System Impact Study

Project Generator Terminal Power

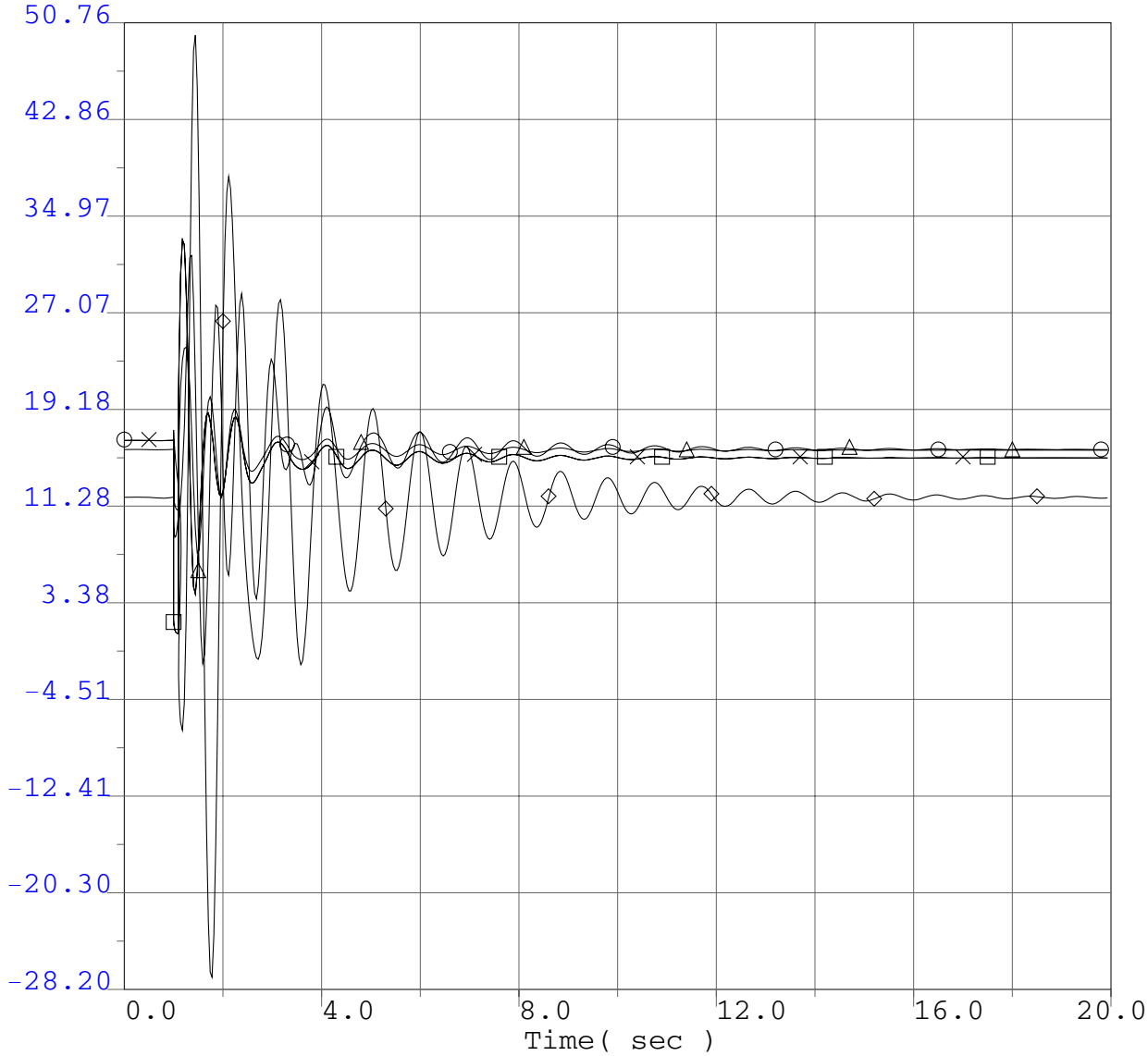

○	-28.2	pg	31180	P0411G1	13.8	"1" 1	50.76
×	-28.2	pg	31181	P0411G2	13.8	"5" 1	50.76
□	-28.2	pg	31182	P0411G3	13.8	"8" 1	50.76
△	-28.2	pg	31150	FAIRHAVN	13.8	"1" 1	50.76
◇	-28.2	pg	31158	LP SAMOA	12.5	"1" 1	50.76

P0411 Project System Impact Study
2008 Winter Peak Base Case
P0411 @ 166.4MW
Humboldt Bay PP - Eureka #1 60kV line outage
3 ph 6 cyc flt @ Humboldt Bay PP 60kV bus & clr HBay-Eureka 60kV line

P0411 Project System Impact Study

Project Generator Terminal Reactive Power

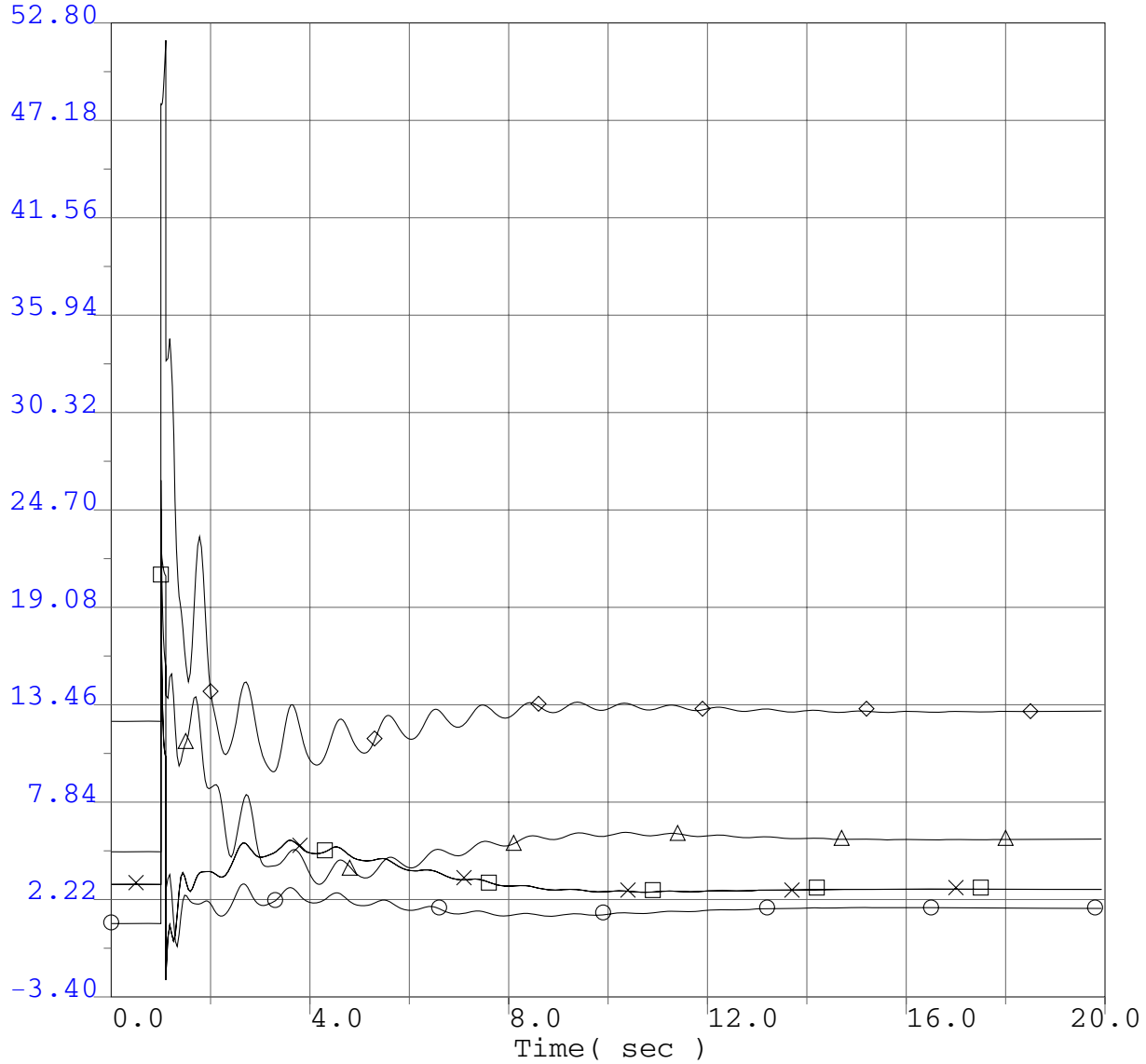

○	-3.4	qg	31180	P0411G1	13.8	"1"	1	52.8
×	-3.4	qg	31181	P0411G2	13.8	"5"	1	52.8
□	-3.4	qg	31182	P0411G3	13.8	"8"	1	52.8
△	-3.4	qg	31150	FAIRHAVN	13.8	"1"	1	52.8
◇	-3.4	qg	31158	LP SAMOA	12.5	"1"	1	52.8

P0411 Project System Impact Study
2008 Winter Peak Base Case
P0411 @ 166.4MW
Humboldt Bay PP - Eureka #1 60kV line outage
3 ph 6 cyc flt @ Humboldt Bay PP 60kV bus & clr HBay-Eureka 60kV line

P0411 Project System Impact Study

Selected WECC Bus Voltage Plots

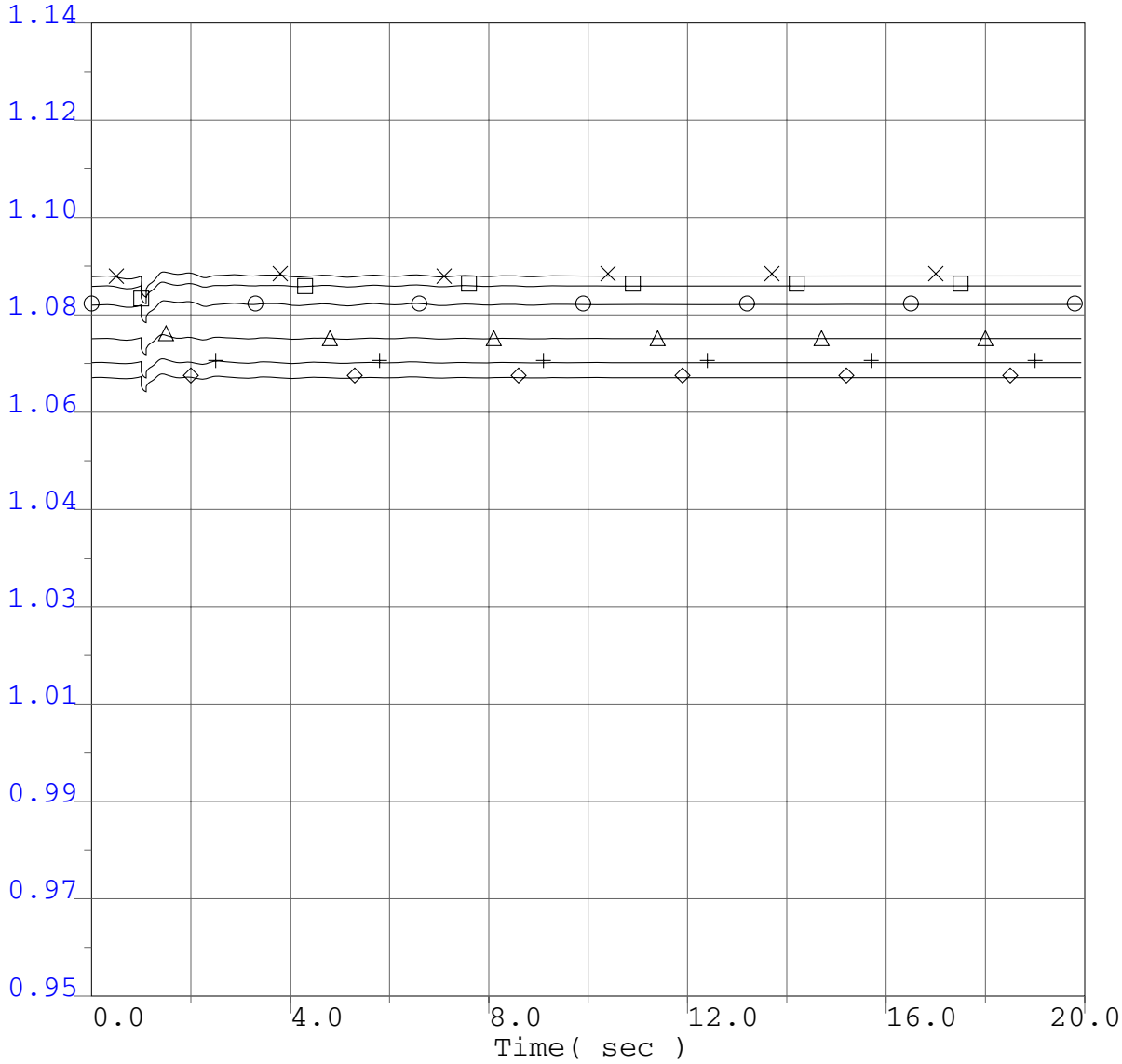

○	0.95	vbus	40687	MALIN	500.0	"*" 1	1.14
×	0.95	vbus	30005	ROUND MT	500.0	"*" 1	1.14
□	0.95	vbus	30015	TABLE MT	500.0	"*" 1	1.14
△	0.95	vbus	30030	VACA-DIX	500.0	"*" 1	1.14
◇	0.95	vbus	30040	TESLA	500.0	"*" 1	1.14
+	0.95	vbus	30035	TRACY	500.0	"*" 1	1.14

P0411 Project System Impact Study
2008 Winter Peak Base Case
P0411 @ 166.4MW
Humboldt Bay PP - Eureka #1 60kV line outage
3 ph 6 cyc flt @ Humboldt Bay PP 60kV bus & clr HBay-Eureka 60kV line

P0411 Project System Impact Study

Selected WECC Bus Voltage Plots

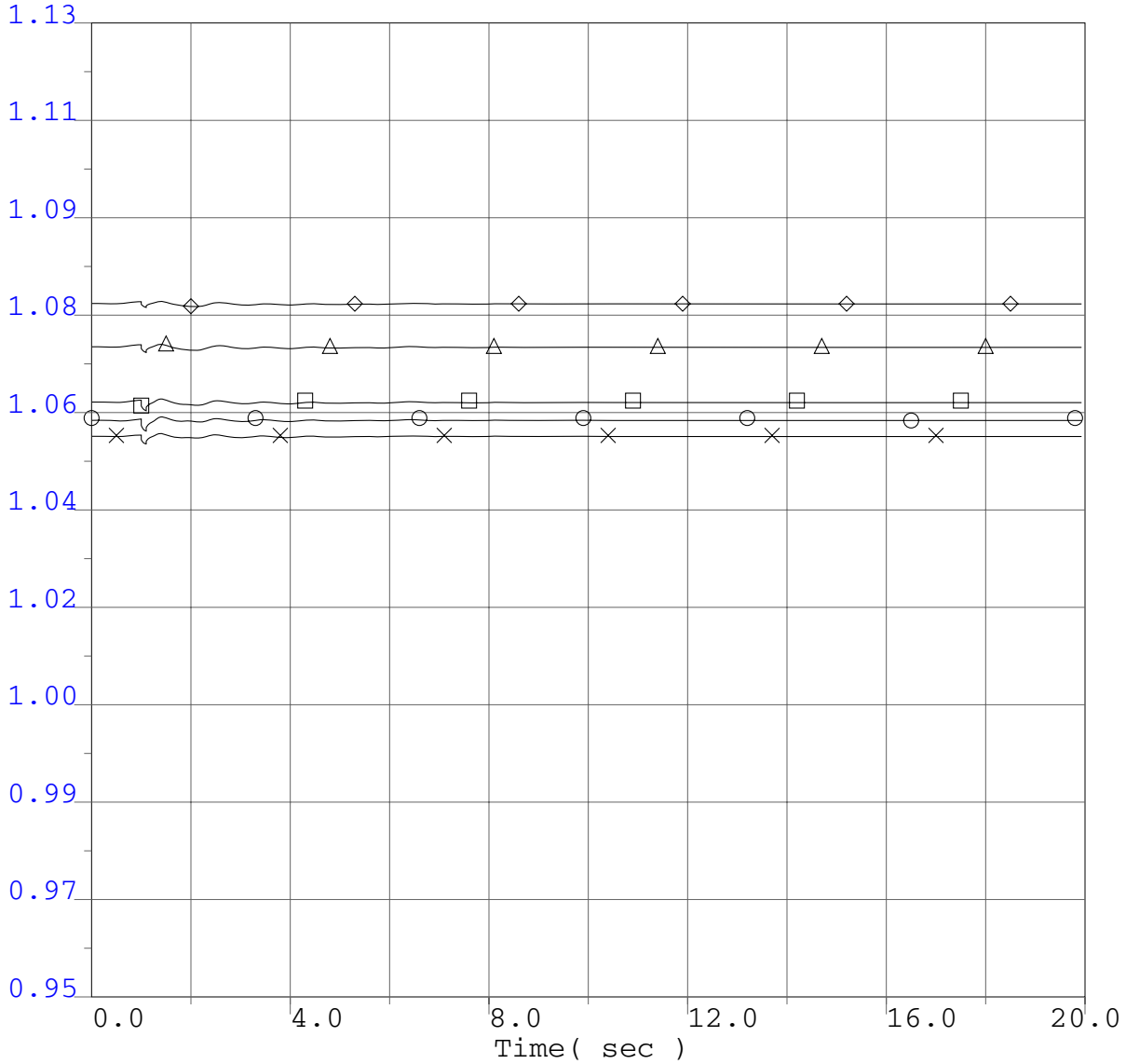

○ 0.95	vbus	30042	METCALF	500.0	"*"	1	1.13
× 0.95	vbus	30045	MOSSLAND	500.0	"*"	1	1.13
□ 0.95	vbus	30050	LOSBANOS	500.0	"*"	1	1.13
△ 0.95	vbus	30055	GATES	500.0	"*"	1	1.13
◇ 0.95	vbus	30060	MIDWAY	500.0	"*"	1	1.13

P0411 Project System Impact Study
2008 Winter Peak Base Case
P0411 @ 166.4MW
Humboldt Bay PP - Eureka #1 60kV line outage
3 ph 6 cyc flt @ Humboldt Bay PP 60kV bus & clr HBay-Eureka 60kV line

P0411 Project System Impact Study

Selected WECC Bus Voltage Plots

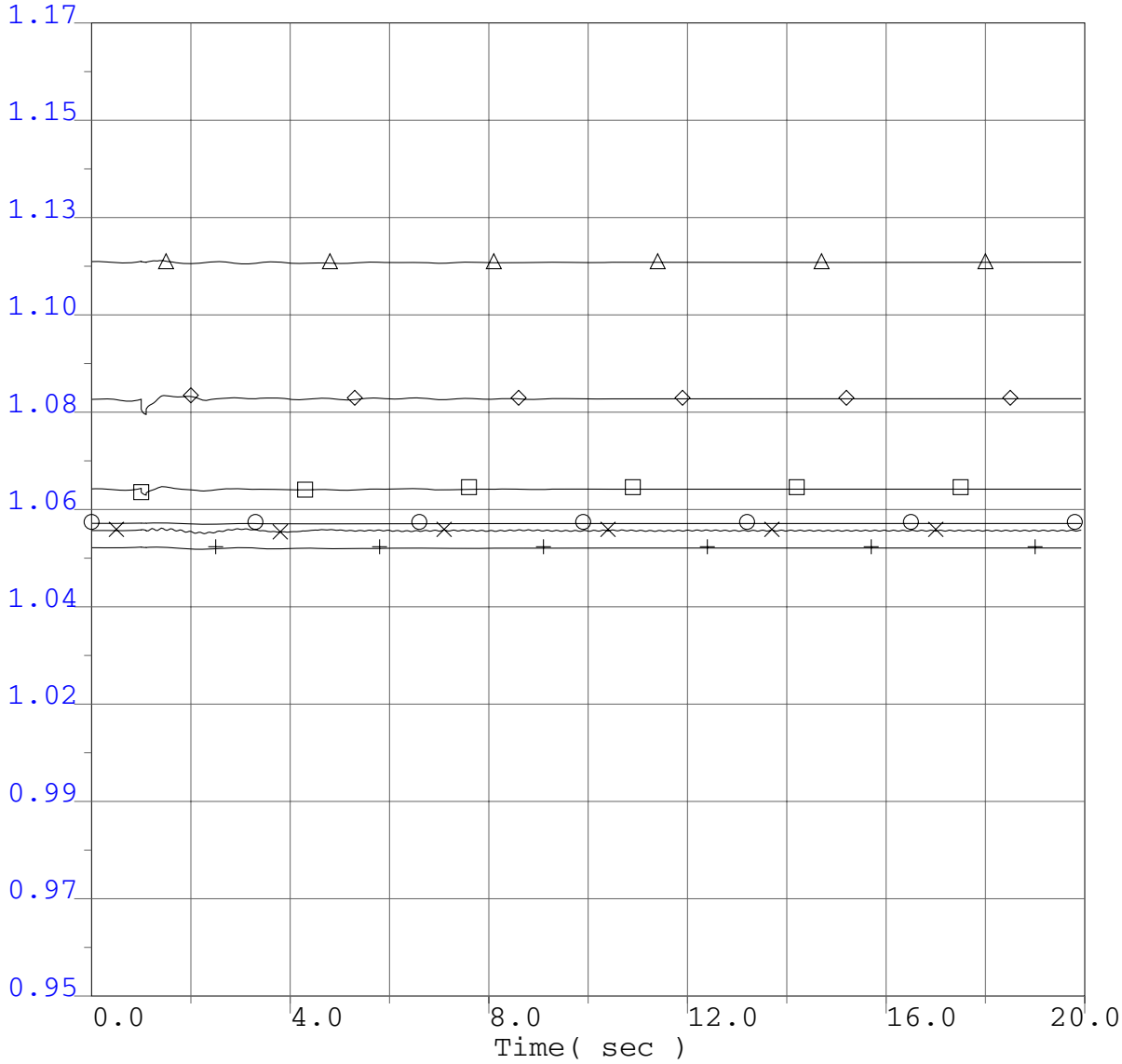

○ 0.95	vbus	14001	FOURCORN	500.0	"*"	1	1.17
× 0.95	vbus	50703	NIC500	500.0	"*"	1	1.17
□ 0.95	vbus	60240	MIDPOINT	500.0	"*"	1	1.17
△ 0.95	vbus	62012	TOWN2	500.0	"*"	1	1.17
◇ 0.95	vbus	40687	MALIN	500.0	"*"	1	1.17
+ 0.95	vbus	66340	SIGURD	345.0	"*"	1	1.17

P0411 Project System Impact Study
2008 Winter Peak Base Case
P0411 @ 166.4MW
Humboldt Bay PP - Eureka #1 60kV line outage
3 ph 6 cyc flt @ Humboldt Bay PP 60kV bus & clr HBay-Eureka 60kV line

P0411 Project System Impact Study

Selected WECC Bus Voltage Plots

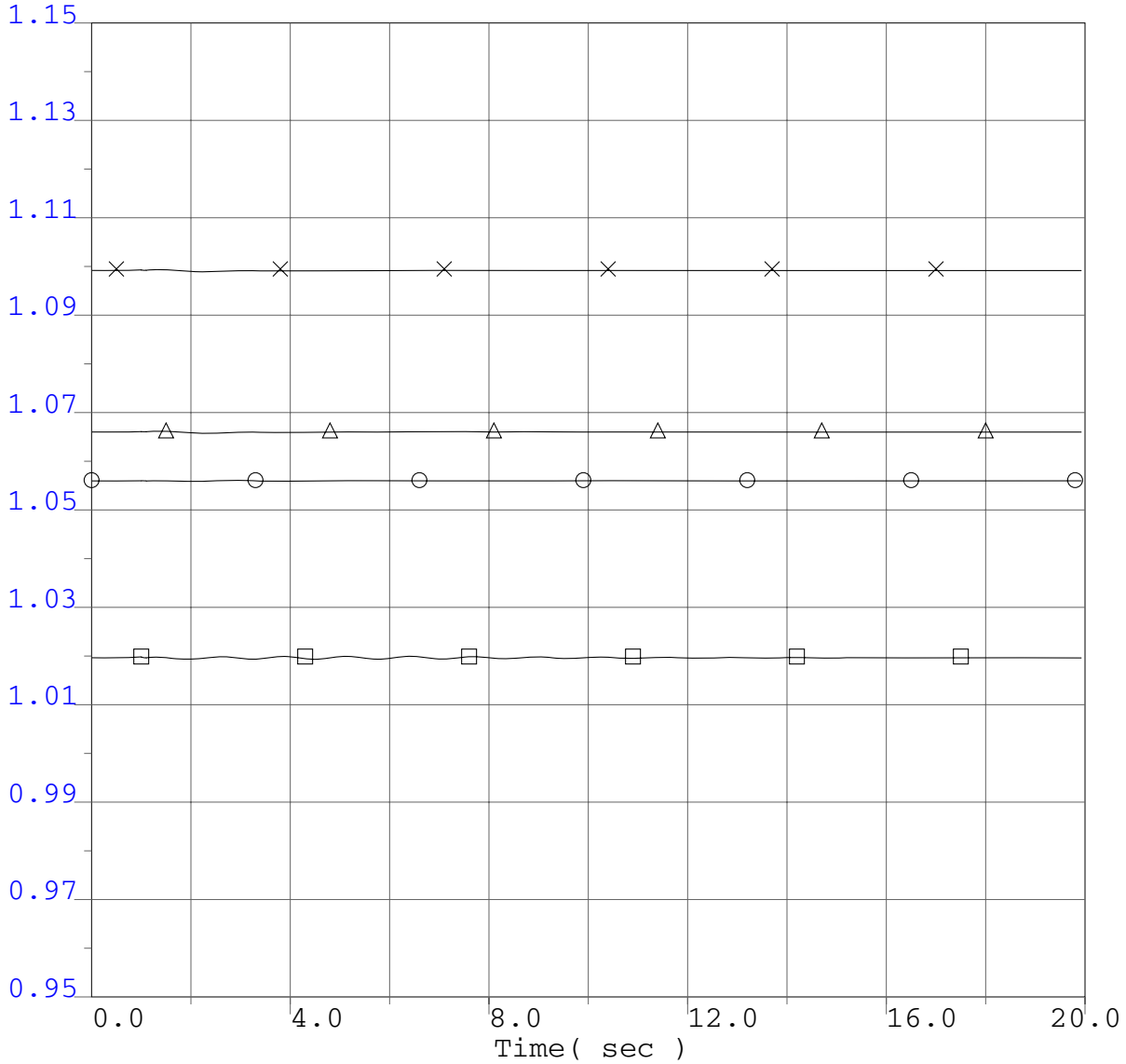

○ 0.95	vbus	54150	LANGDON2	500.0	"*"	1	1.15
× 0.95	vbus	14003	NAVAJO	500.0	"*"	1	1.15
□ 0.95	vbus	24153	VESTAL	230.0	"*"	1	1.15
△ 0.95	vbus	22360	IMPRLVLY	500.0	"*"	1	1.15

P0411 Project System Impact Study
2008 Winter Peak Base Case
P0411 @ 166.4MW
Humboldt Bay PP - Eureka #1 60kV line outage
3 ph 6 cyc flt @ Humboldt Bay PP 60kV bus & clr HBay-Eureka 60kV line

P0411 Project System Impact Study

Selected WECC Bus Frequency Plots

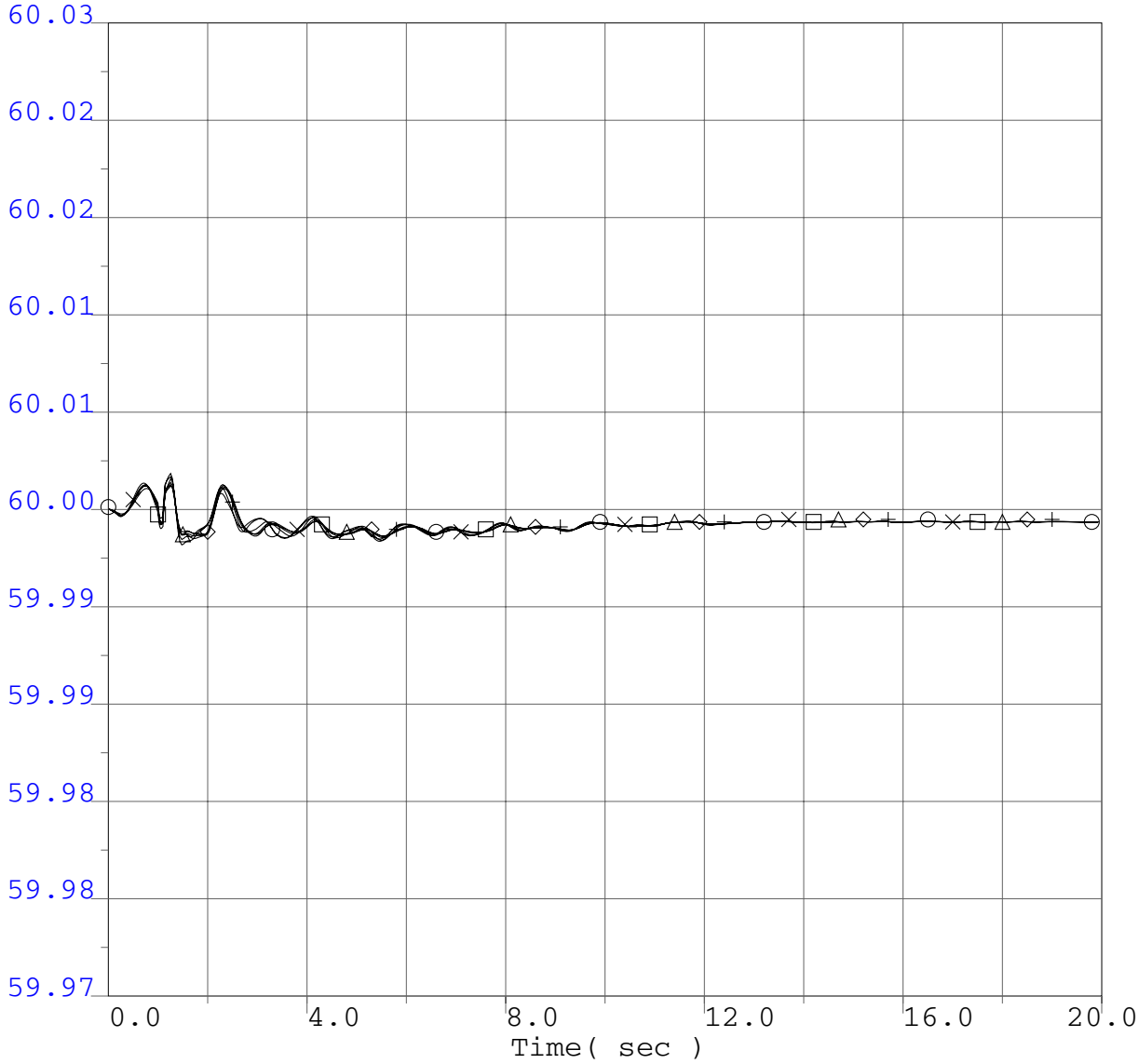

○ 59.97	fbus	40687	MALIN	500.0	"*"	1	60.03
× 59.97	fbus	30005	ROUND MT	500.0	"*"	1	60.03
□ 59.97	fbus	30015	TABLE MT	500.0	"*"	1	60.03
△ 59.97	fbus	30030	VACA-DIX	500.0	"*"	1	60.03
◇ 59.97	fbus	30040	TESLA	500.0	"*"	1	60.03
+ 59.97	fbus	30035	TRACY	500.0	"*"	1	60.03

P0411 Project System Impact Study
2008 Winter Peak Base Case
P0411 @ 166.4MW
Humboldt Bay PP - Eureka #1 60kV line outage
3 ph 6 cyc flt @ Humboldt Bay PP 60kV bus & clr HBay-Eureka 60kV line

P0411 Project System Impact Study

Selected WECC Bus Frequency Plots

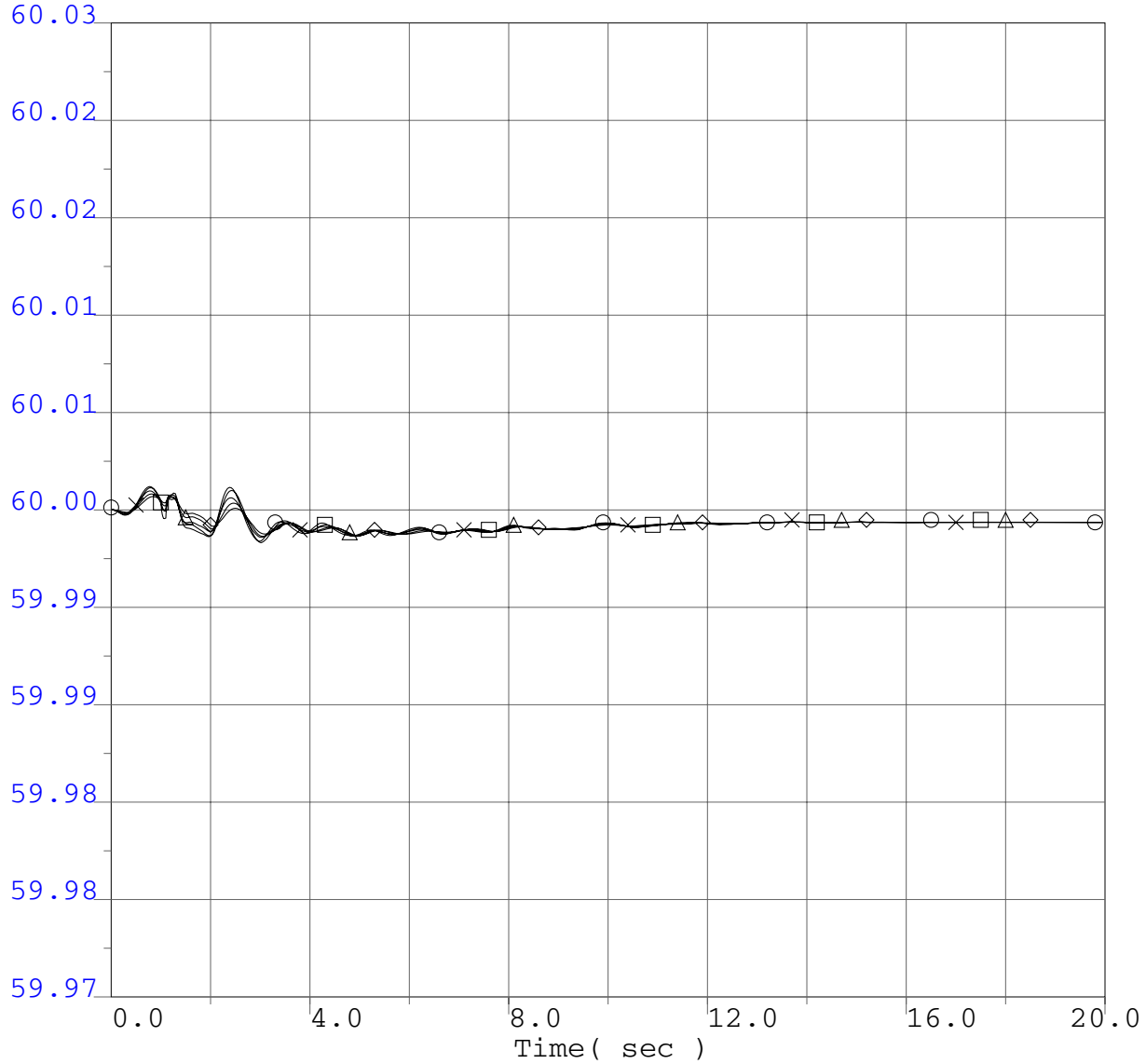

○ 59.97	fbus	30042	METCALF	500.0	"*"	1	60.03
× 59.97	fbus	30045	MOSSLAND	500.0	"*"	1	60.03
□ 59.97	fbus	30050	LOSBANOS	500.0	"*"	1	60.03
△ 59.97	fbus	30055	GATES	500.0	"*"	1	60.03
◇ 59.97	fbus	30060	MIDWAY	500.0	"*"	1	60.03

P0411 Project System Impact Study
2008 Winter Peak Base Case
P0411 @ 166.4MW
Humboldt Bay PP - Eureka #1 60kV line outage
3 ph 6 cyc flt @ Humboldt Bay PP 60kV bus & clr HBay-Eureka 60kV line

P0411 Project System Impact Study

Selected WECC Bus Frequency Plots

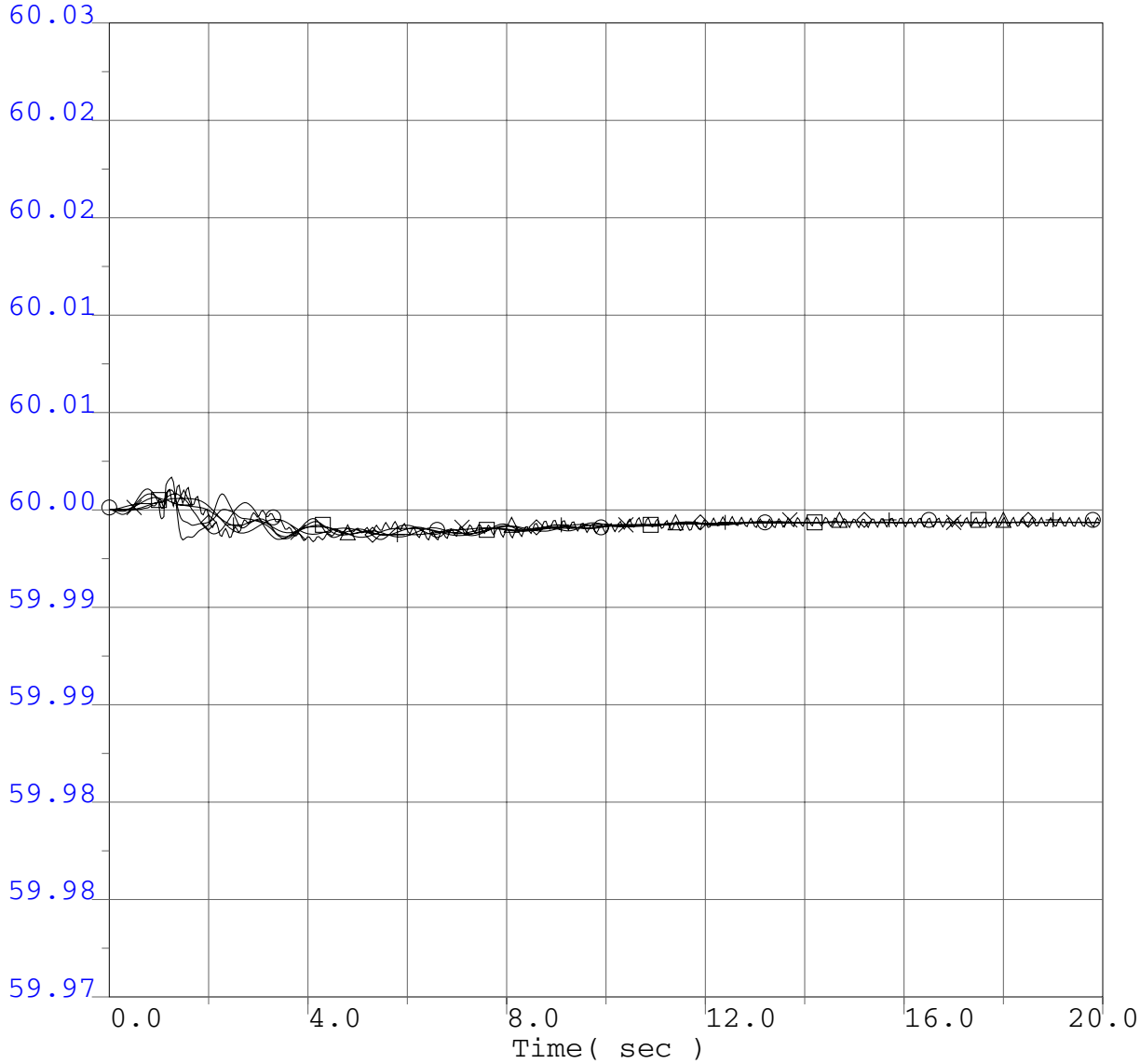

P0411 Project System Impact Study
2008 Winter Peak Base Case
P0411 @ 166.4MW
Humboldt Bay PP - Eureka #1 60kV line outage
3 ph 6 cyc flt @ Humboldt Bay PP 60kV bus & clr HBay-Eureka 60kV line

P0411 Project System Impact Study

Selected WECC Bus Frequency Plots

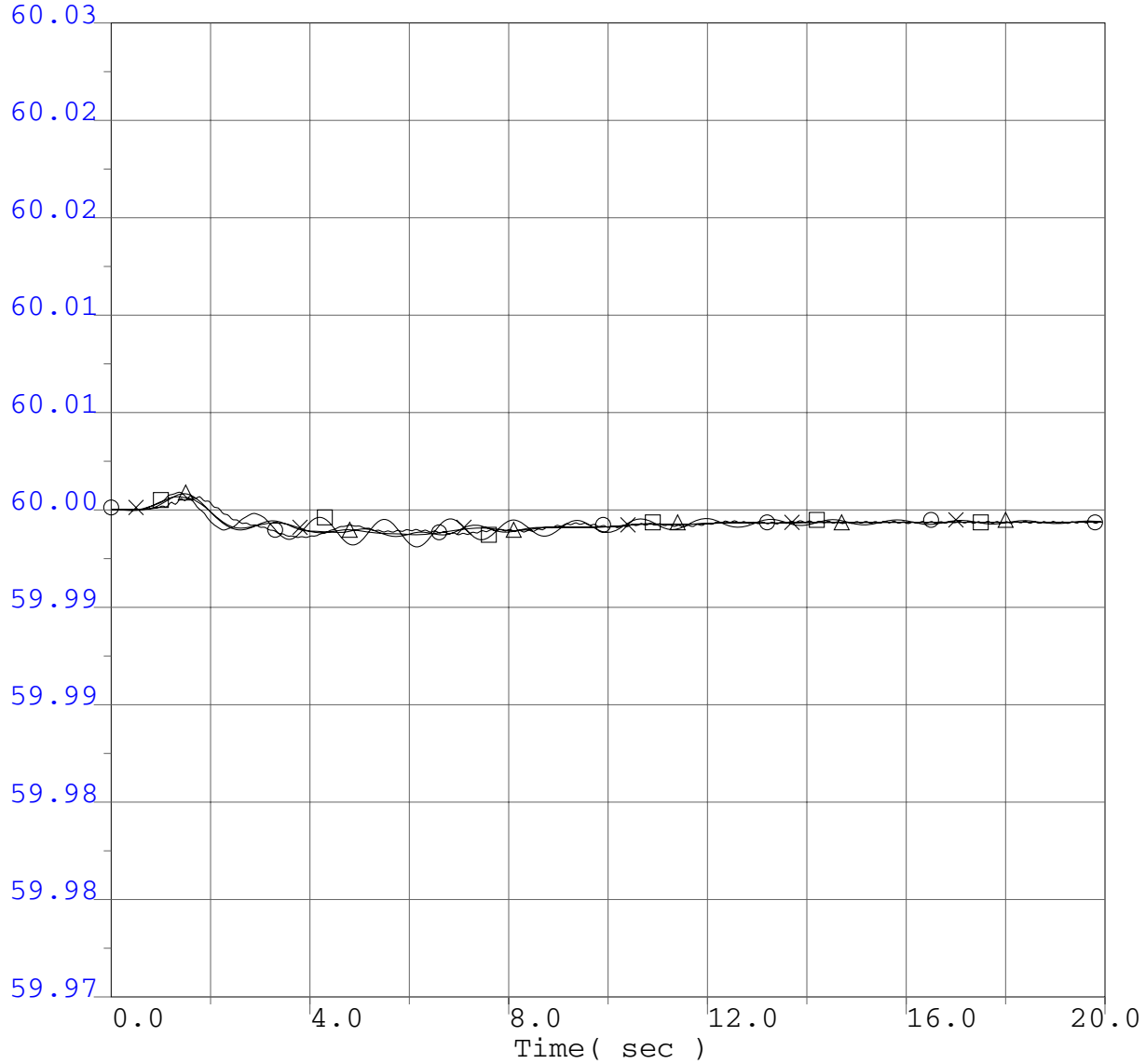

○ 59.97	fbus	54150	LANGDON2	500.0	"*"	1	60.03
× 59.97	fbus	14003	NAVAJO	500.0	"*"	1	60.03
□ 59.97	fbus	24153	VESTAL	230.0	"*"	1	60.03
△ 59.97	fbus	22360	IMPRLVLY	500.0	"*"	1	60.03

P0411 Project System Impact Study
2008 Winter Peak Base Case
P0411 @ 166.4MW
Humboldt Bay PP - Eureka #1 60kV line outage
3 ph 6 cyc flt @ Humboldt Bay PP 60kV bus & clr HBay-Eureka 60kV line

P0411 Project System Impact Study

WECC Generator Rotor Angle

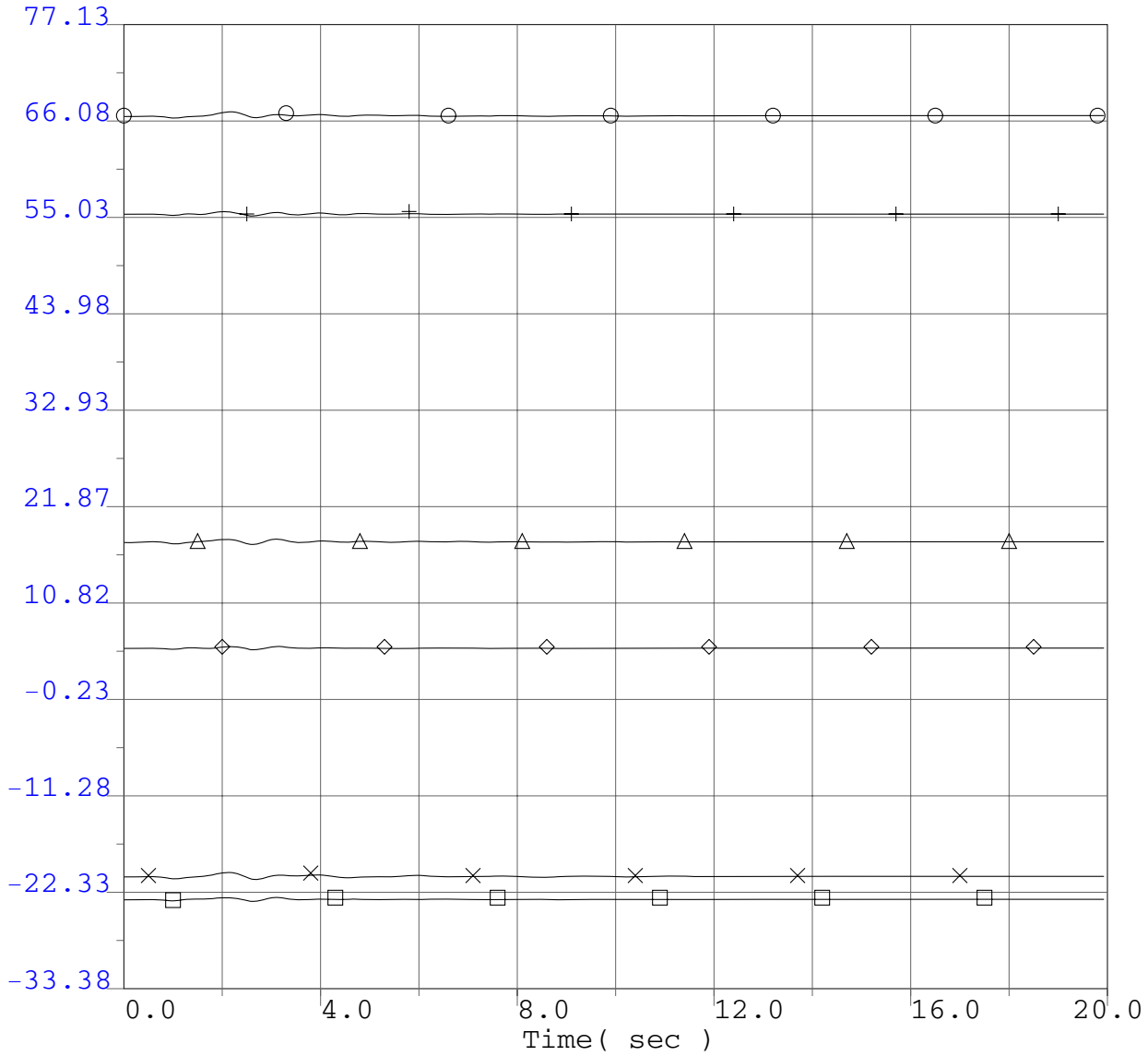

○	-33.38	ang	14914	FCNGN4CC	22.0	"H" 1	77.13
×	-33.38	ang	50500	GMS G6	13.8	"1" 1	77.13
□	-33.38	ang	60100	BRWNL 5	13.8	"1" 1	77.13
△	-33.38	ang	62048	COLSTP 3	26.0	"1" 1	77.13
◇	-33.38	ang	41701	JONDAY01	13.8	"1" 1	77.13
+	-33.38	ang	36411	DIABLO 1	25.0	"1" 1	77.13

P0411 Project System Impact Study
2008 Winter Peak Base Case
P0411 @ 166.4MW
Humboldt Bay PP - Eureka #1 60kV line outage
3 ph 6 cyc flt @ Humboldt Bay PP 60kV bus & clr HBay-Eureka 60kV line

P0411 Project System Impact Study

WECC Generator Rotor Angle

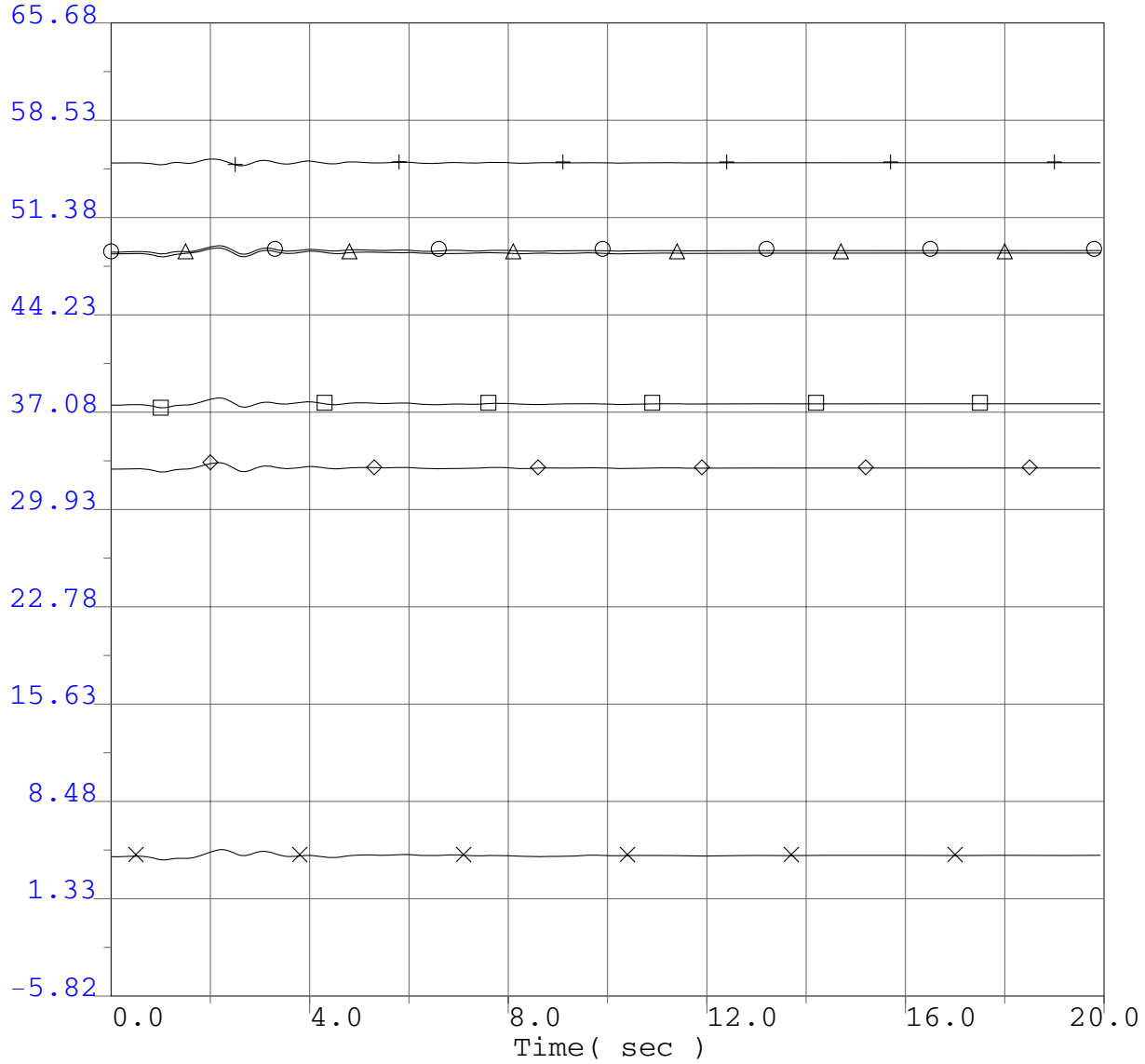

○	-5.82	ang	65490	EHUNTR 1	24.0	"1" 1	65.68
×	-5.82	ang	54280	SUND#2GN	18.0	"2" 1	65.68
□	-5.82	ang	79151	GLENC3-4	13.8	"3" 1	65.68
△	-5.82	ang	24130	S.ONOFR3	22.0	"3" 1	65.68
◇	-5.82	ang	22244	ENCINA 5	24.0	"1" 1	65.68
+	-5.82	ang	36411	DIABLO 1	25.0	"1" 1	65.68

P0411 Project System Impact Study
2008 Winter Peak Base Case
P0411 @ 166.4MW
Humboldt Bay PP - Eureka #1 60kV line outage
3 ph 6 cyc flt @ Humboldt Bay PP 60kV bus & clr HBay-Eureka 60kV line

P0411 Project System Impact Study

Selected PG&E Transmission Line Flows (MW)

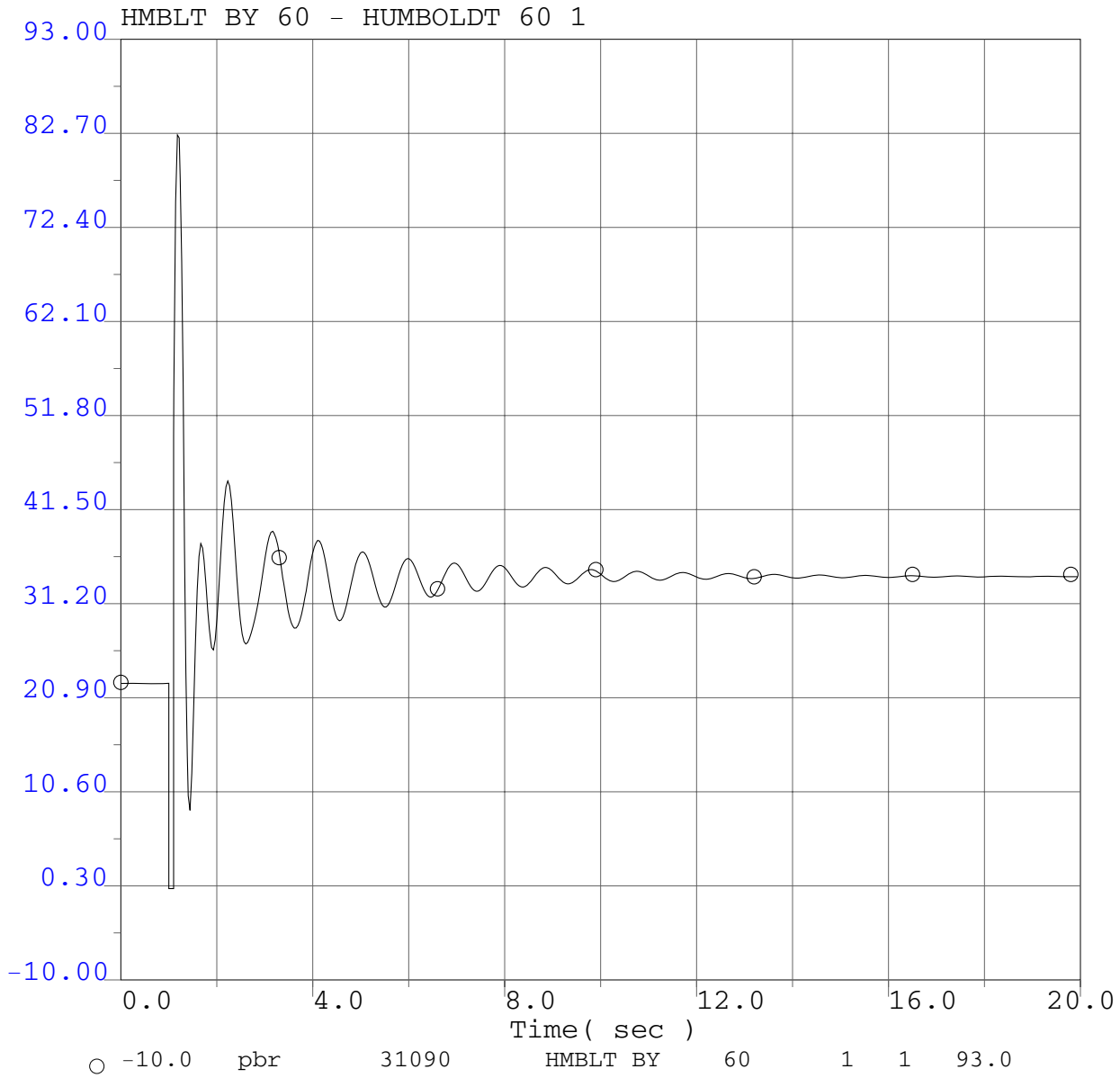

P0411 Project System Impact Study
2008 Winter Peak Base Case
P0411 @ 166.4MW
Humboldt Bay PP - Eureka #1 60kV line outage
3 ph 6 cyc flt @ Humboldt Bay PP 60kV bus & clr HBay-Eureka 60kV line

P0411 Project System Impact Study

Selected PG&E Transmission Line Flows (MW)

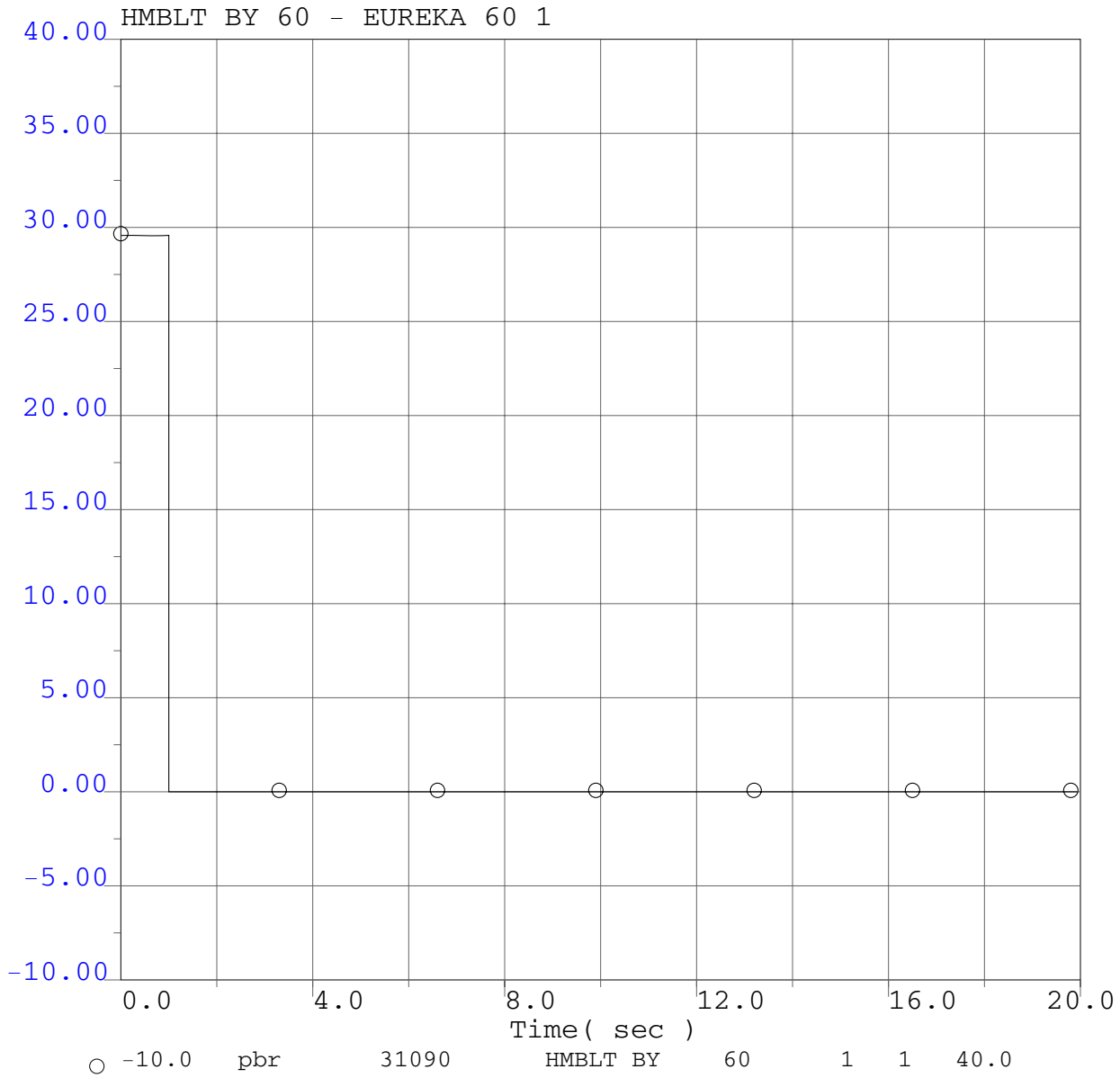

P0411 Project System Impact Study
2008 Winter Peak Base Case
P0411 @ 166.4MW
Humboldt Bay PP - Eureka #1 60kV line outage
3 ph 6 cyc flt @ Humboldt Bay PP 60kV bus & clr HBay-Eureka 60kV line

P0411 Project System Impact Study

Selected PG&E Transmission Line Flows (MW)

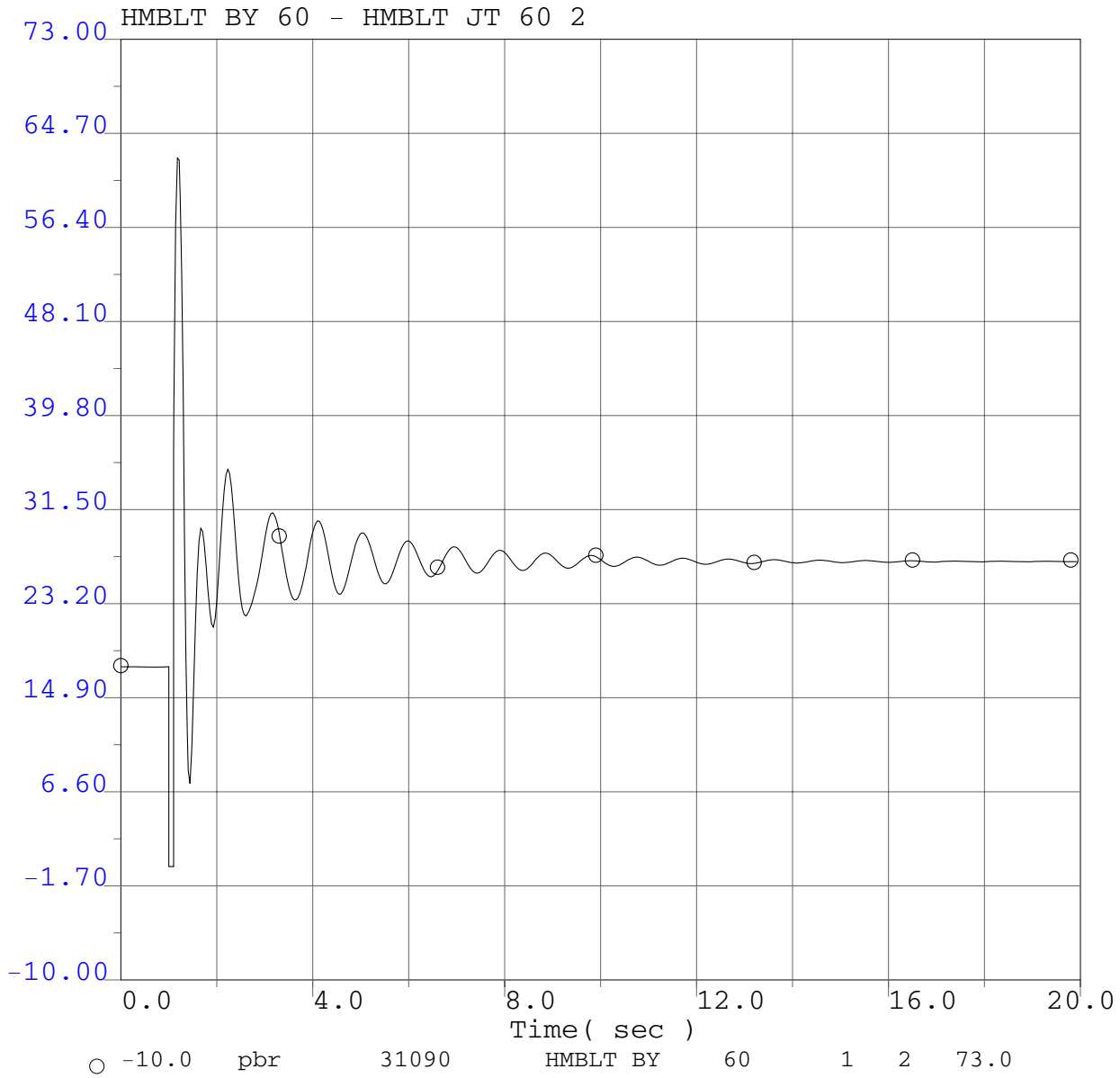

P0411 Project System Impact Study
2008 Winter Peak Base Case
P0411 @ 166.4MW
Humboldt Bay PP - Eureka #1 60kV line outage
3 ph 6 cyc flt @ Humboldt Bay PP 60kV bus & clr HBay-Eureka 60kV line

P0411 Project System Impact Study

Selected PG&E Transmission Line Flows (MW)

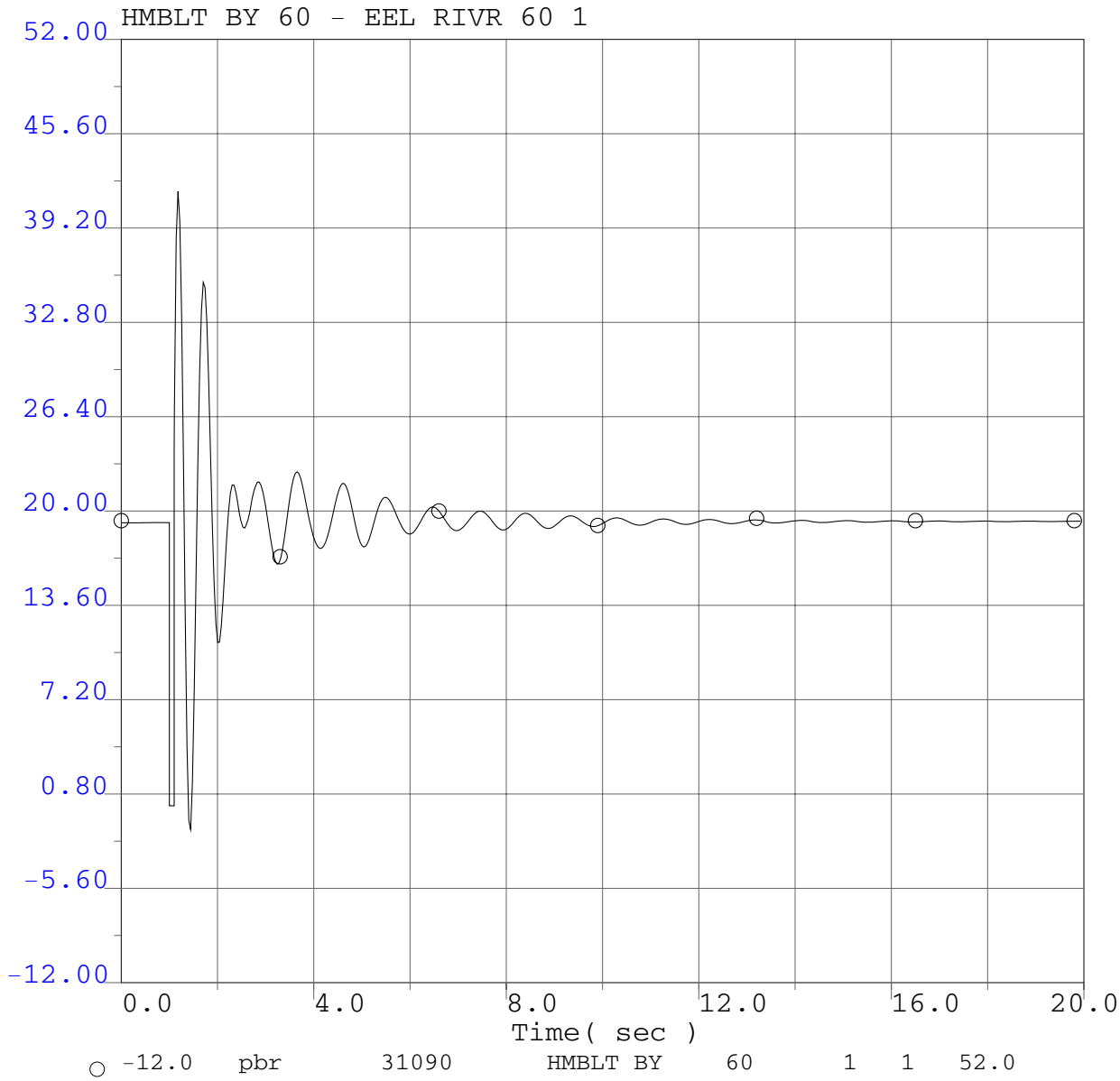

P0411 Project System Impact Study
2008 Winter Peak Base Case
P0411 @ 166.4MW
Humboldt Bay PP - Eureka #1 60kV line outage
3 ph 6 cyc flt @ Humboldt Bay PP 60kV bus & clr HBay-Eureka 60kV line

P0411 Project System Impact Study

Selected PG&E Transmission Line Flows (MW)

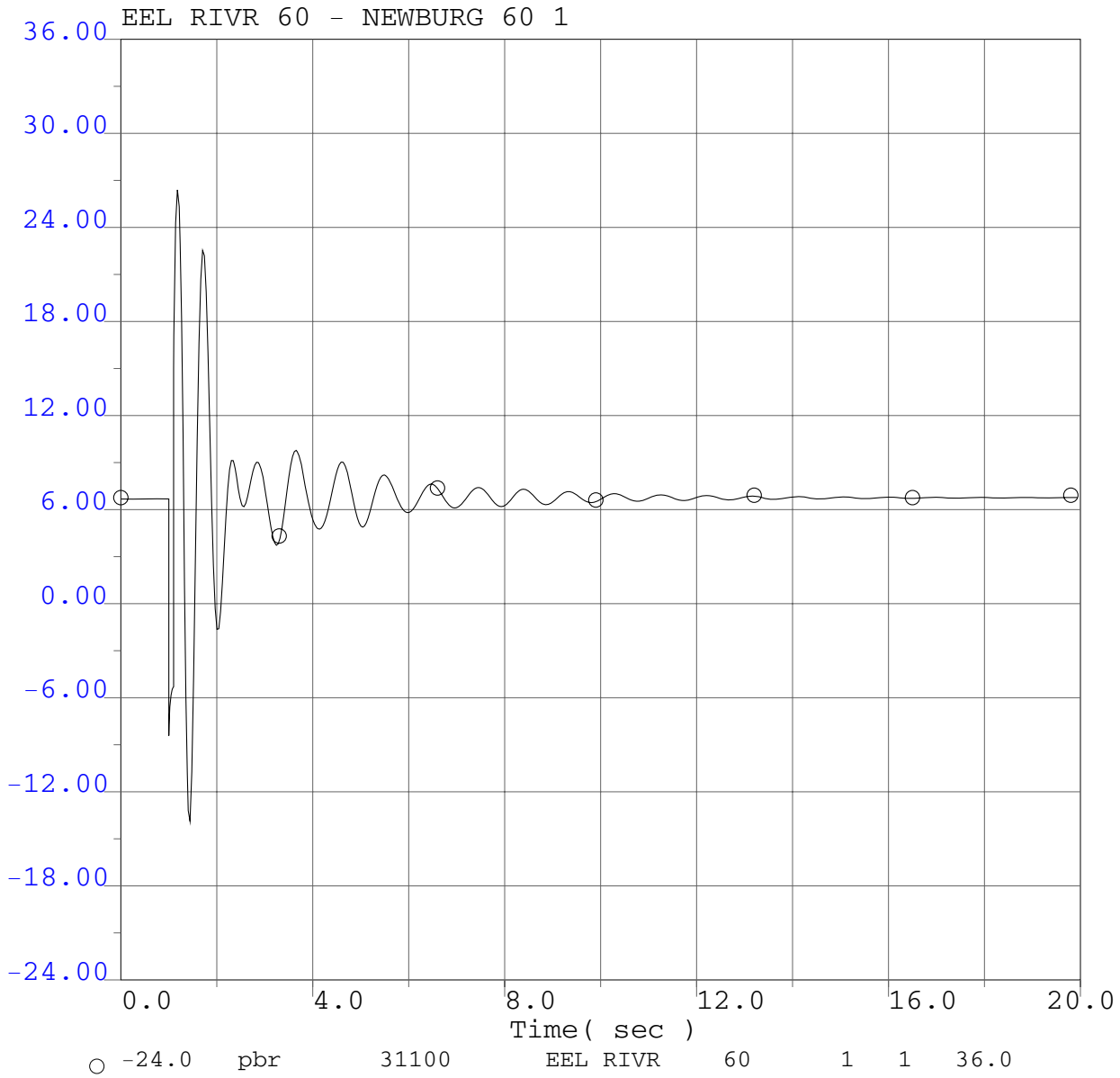

P0411 Project System Impact Study
2008 Winter Peak Base Case
P0411 @ 166.4MW
Humboldt Bay PP - Eureka #1 60kV line outage
3 ph 6 cyc flt @ Humboldt Bay PP 60kV bus & clr HBay-Eureka 60kV line

P0411 Project System Impact Study

Selected PG&E Transmission Line Flows (MW)

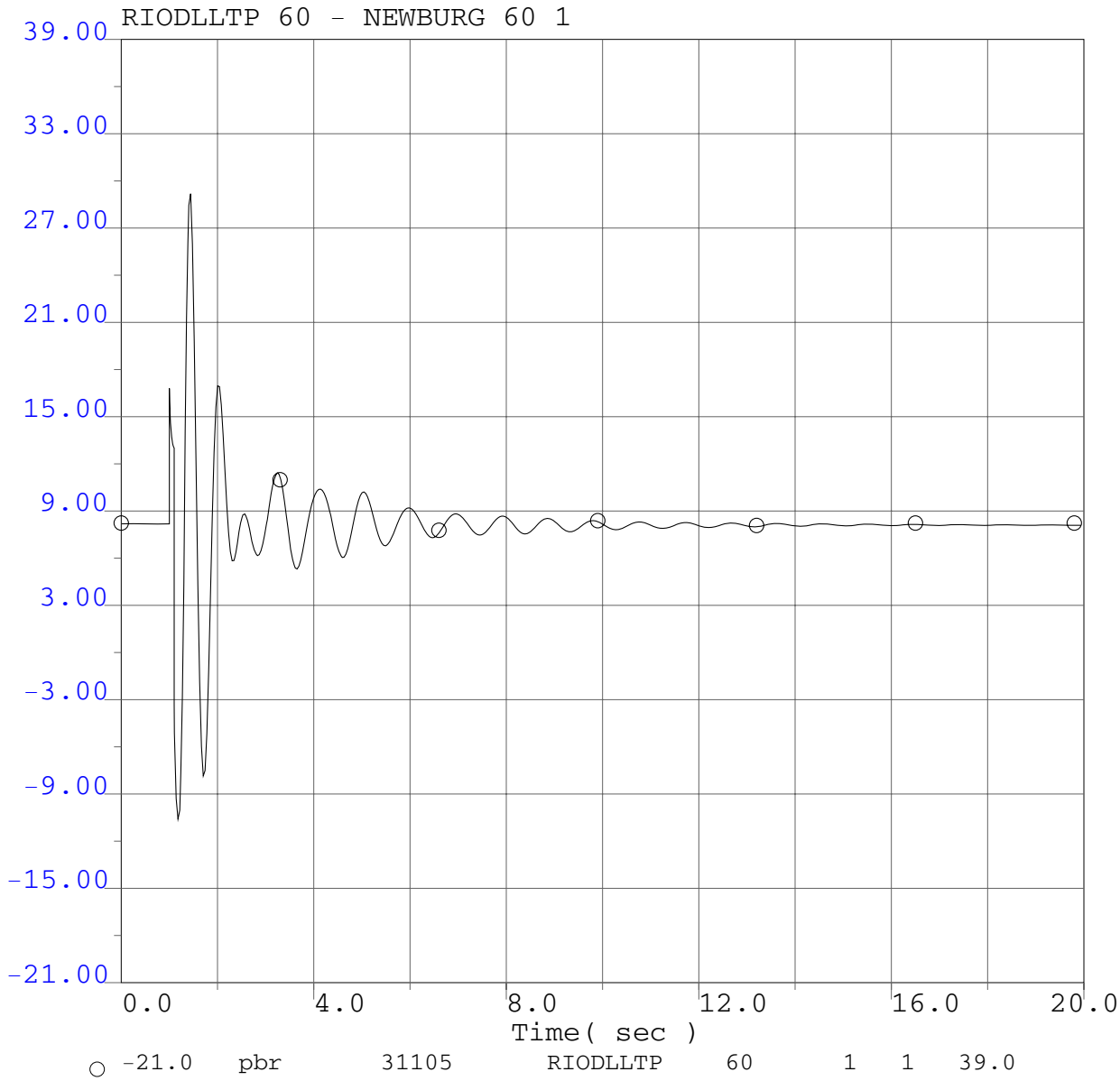

P0411 Project System Impact Study
2008 Winter Peak Base Case
P0411 @ 166.4MW
Humboldt Bay PP - Eureka #1 60kV line outage
3 ph 6 cyc flt @ Humboldt Bay PP 60kV bus & clr HBay-Eureka 60kV line

P0411 Project System Impact Study

Selected PG&E Transmission Line Flows (MW)

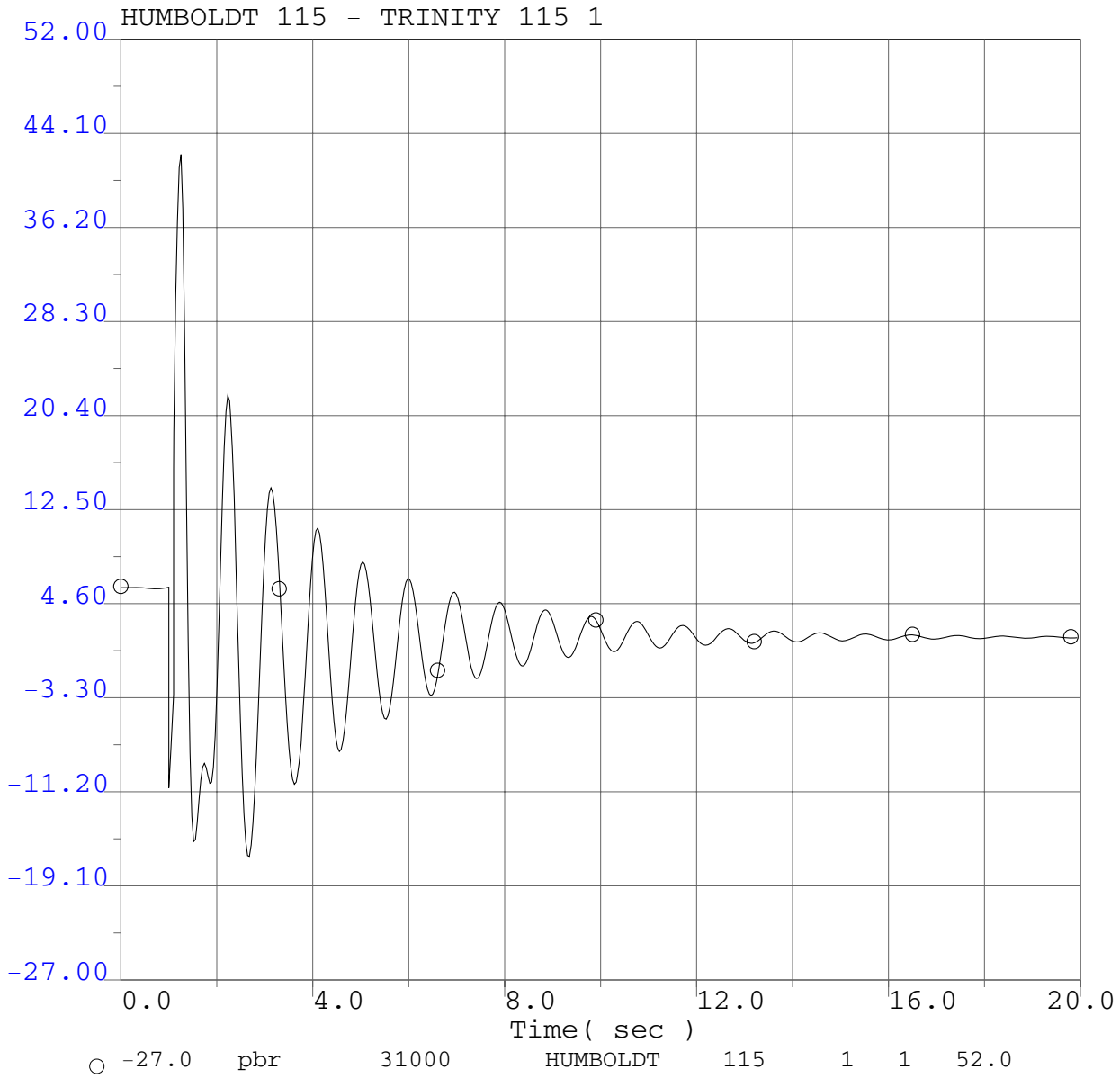

P0411 Project System Impact Study
2008 Winter Peak Base Case
P0411 @ 166.4MW
Humboldt Bay PP - Eureka #1 60kV line outage
3 ph 6 cyc flt @ Humboldt Bay PP 60kV bus & clr HBay-Eureka 60kV line

P0411 Project System Impact Study

Selected PG&E Transmission Line Flows (MW)

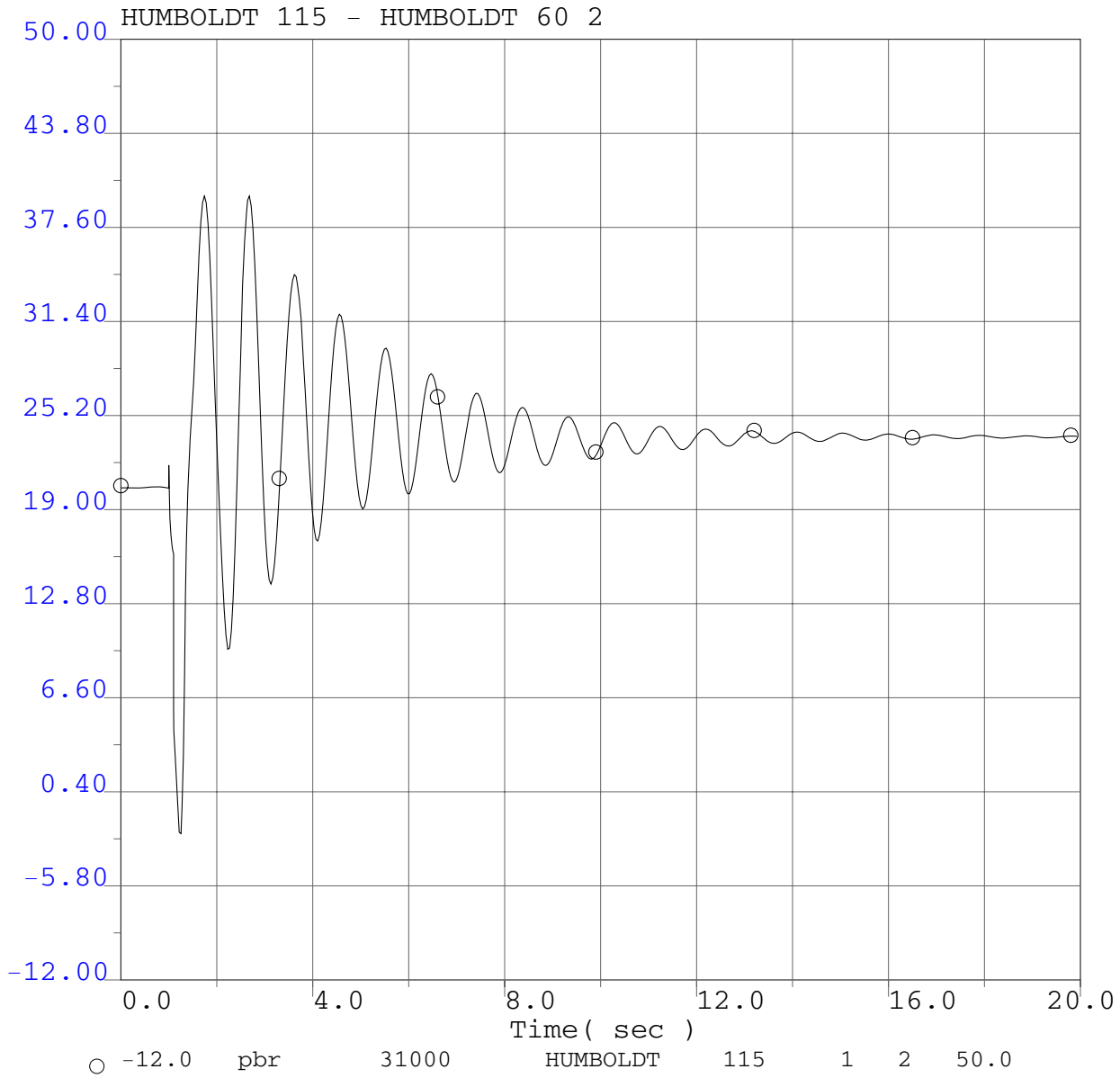

P0411 Project System Impact Study
2008 Winter Peak Base Case
P0411 @ 166.4MW
Humboldt Bay PP - Eureka #1 60kV line outage
3 ph 6 cyc flt @ Humboldt Bay PP 60kV bus & clr HBay-Eureka 60kV line

P0411 Project System Impact Study

Selected PG&E Transmission Line Flows (MW)

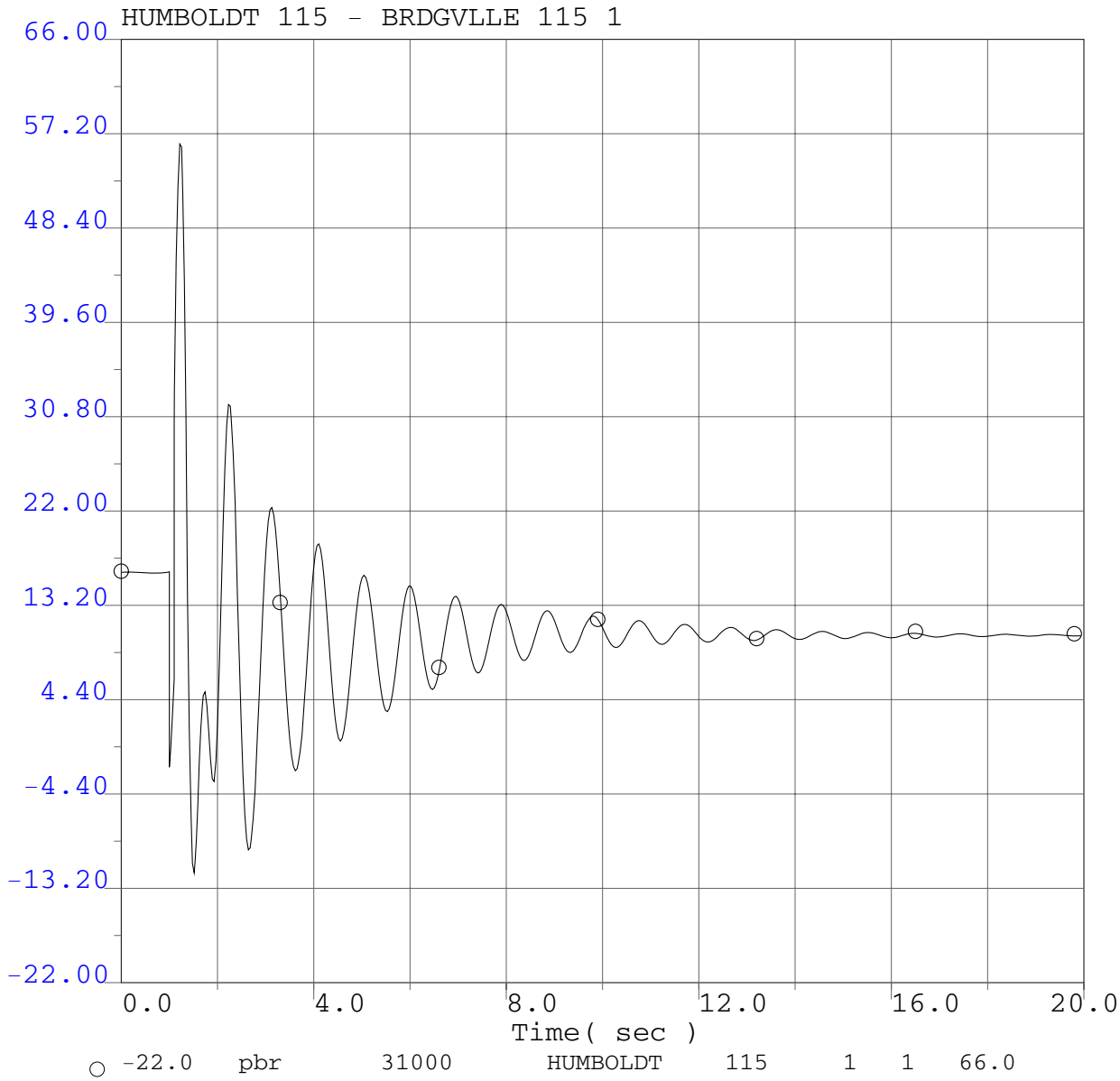

P0411 Project System Impact Study
2008 Winter Peak Base Case
P0411 @ 166.4MW
Humboldt Bay PP - Eureka #1 60kV line outage
3 ph 6 cyc flt @ Humboldt Bay PP 60kV bus & clr HBay-Eureka 60kV line

P0411 Project System Impact Study

Selected PG&E Transmission Line Flows (MW)

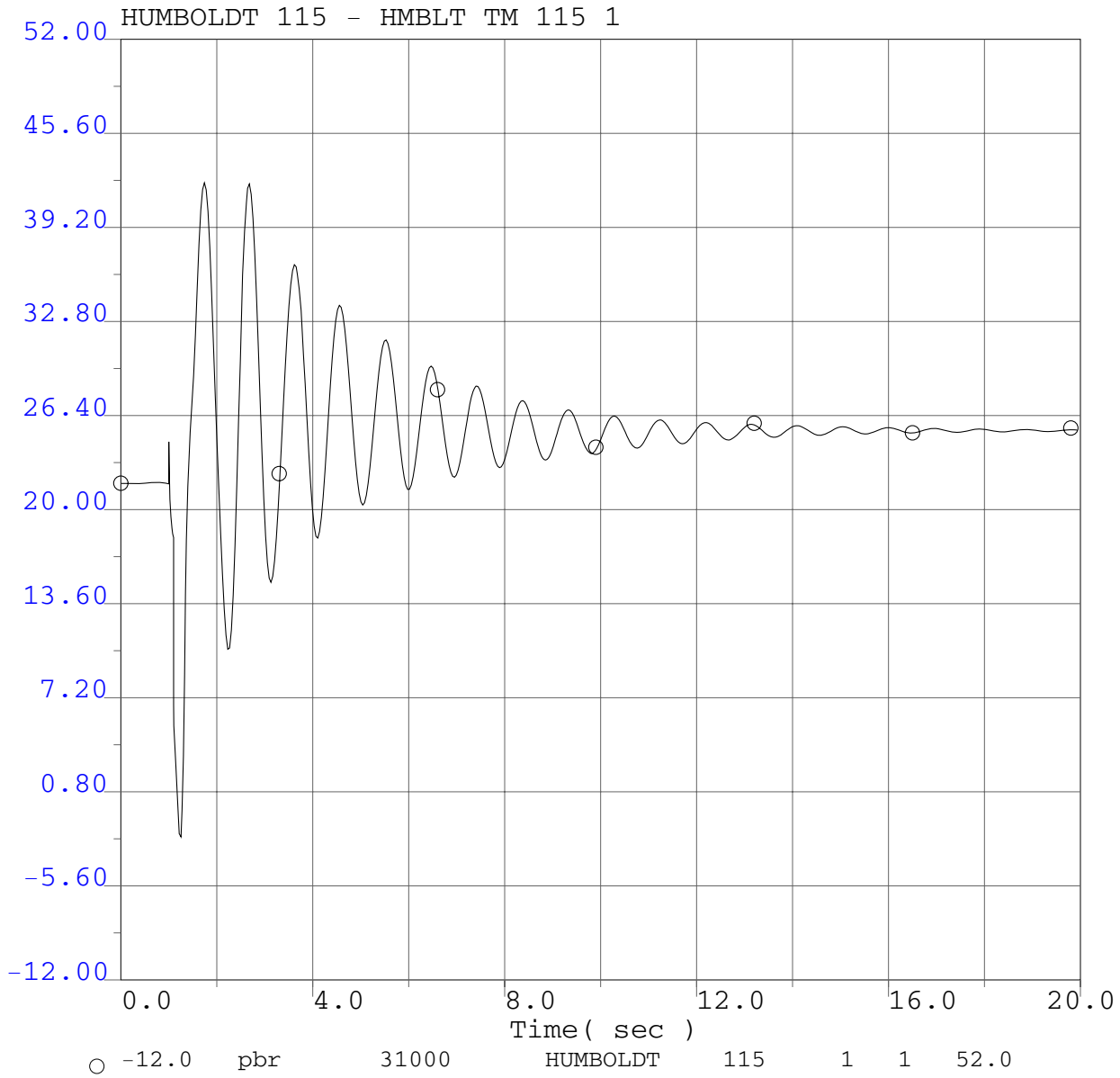

P0411 Project System Impact Study
2008 Winter Peak Base Case
P0411 @ 166.4MW
Humboldt Bay PP - Eureka #1 60kV line outage
3 ph 6 cyc flt @ Humboldt Bay PP 60kV bus & clr HBay-Eureka 60kV line

P0411 Project System Impact Study

Selected PG&E Bus Voltage Plots Adjacent to Fault

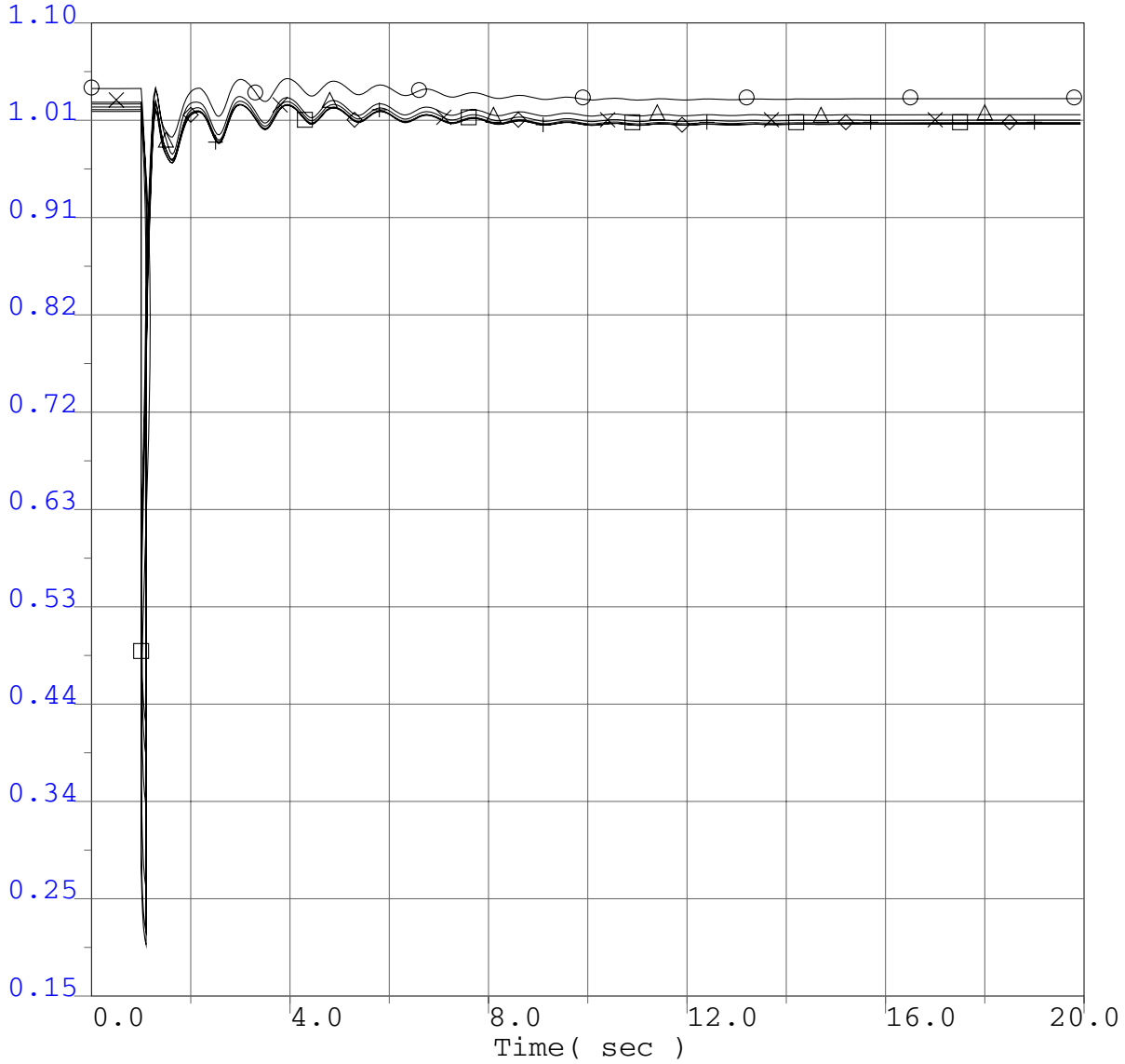

○	0.15	vbul	31090	HMBLT BY	60.0	"*"	1	1.1
×	0.15	vbus	31080	HUMBOLDT	60.0	"*"	1	1.1
□	0.15	vbul	31102	NEWBURG	60.0	"*"	1	1.1
△	0.15	vbus	31105	RIODLLTP	60.0	"*"	1	1.1
◇	0.15	vbul	31086	EUREKA	60.0	"*"	1	1.1
+	0.15	vbul	31082	HARRIS	60.0	"*"	1	1.1

P0411 Project System Impact Study
2008 Winter Peak Base Case
P0411 @ 166.4MW
Humboldt Bay PP - Bumboldt #1 115kV line outage
3 phase 6 cycle fault at Humboldt Bay PP 115kV bus and clear HBay-Humb #1 115kV

P0411 Project System Impact Study

Selected PG&E Bus Frequency Plots Adjacent to Fault

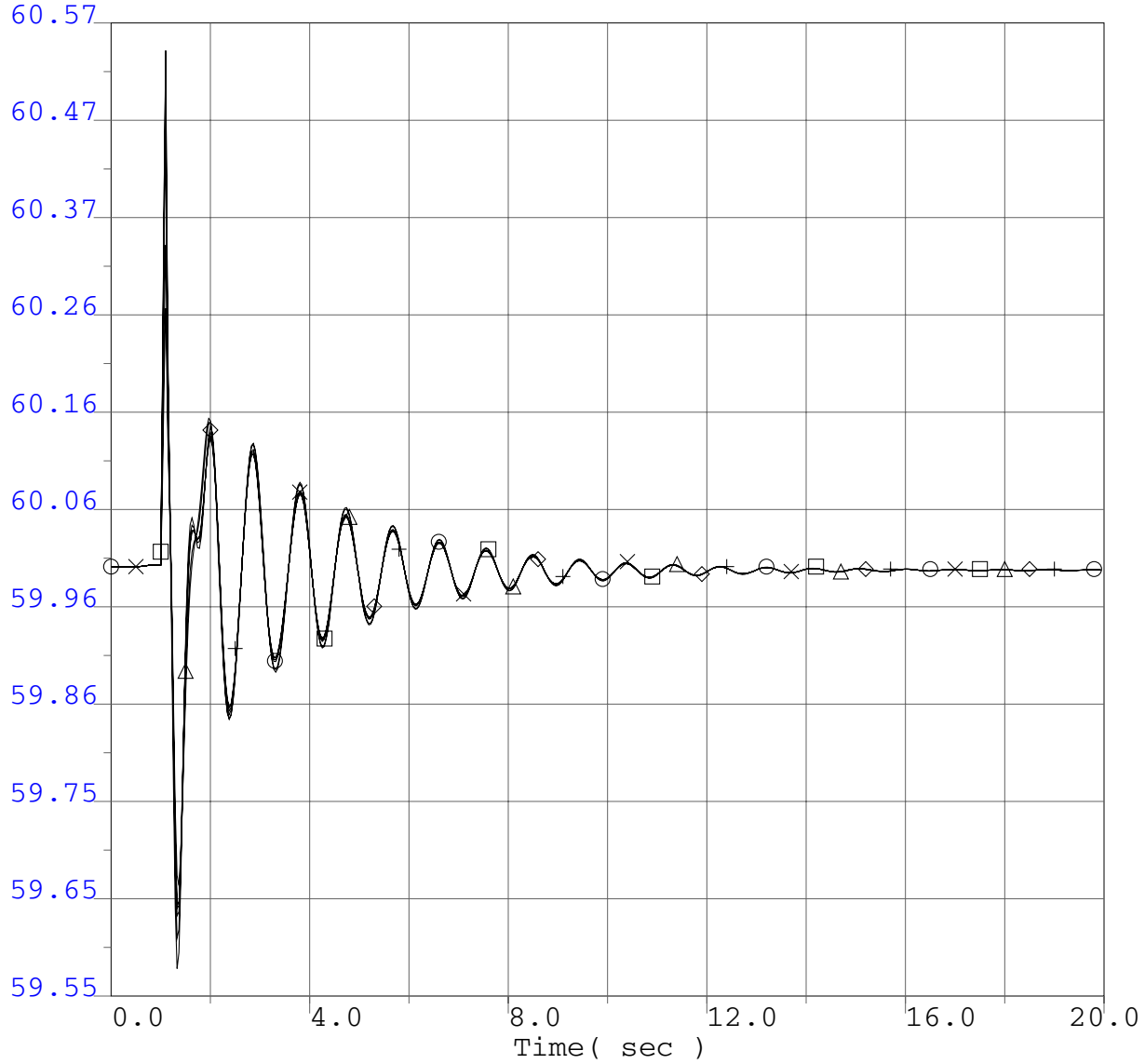

○	59.55	fbul	31090	HMBLT BY	60.0	"*" 1	60.57
×	59.55	fbus	31080	HUMBOLDT	60.0	"*" 1	60.57
□	59.55	fbul	31102	NEWBURG	60.0	"*" 1	60.57
△	59.55	fbus	31105	RIODLLTP	60.0	"*" 1	60.57
◇	59.55	fbul	31086	EUREKA	60.0	"*" 1	60.57
+	59.55	fbul	31082	HARRIS	60.0	"*" 1	60.57

P0411 Project System Impact Study
2008 Winter Peak Base Case
P0411 @ 166.4MW
Humboldt Bay PP - Bumboldt #1 115kV line outage
3 phase 6 cycle fault at Humboldt Bay PP 115kV bus and clear HBay-Humb #1 115kV

P0411 Project System Impact Study

Project Generator Terminal Voltages

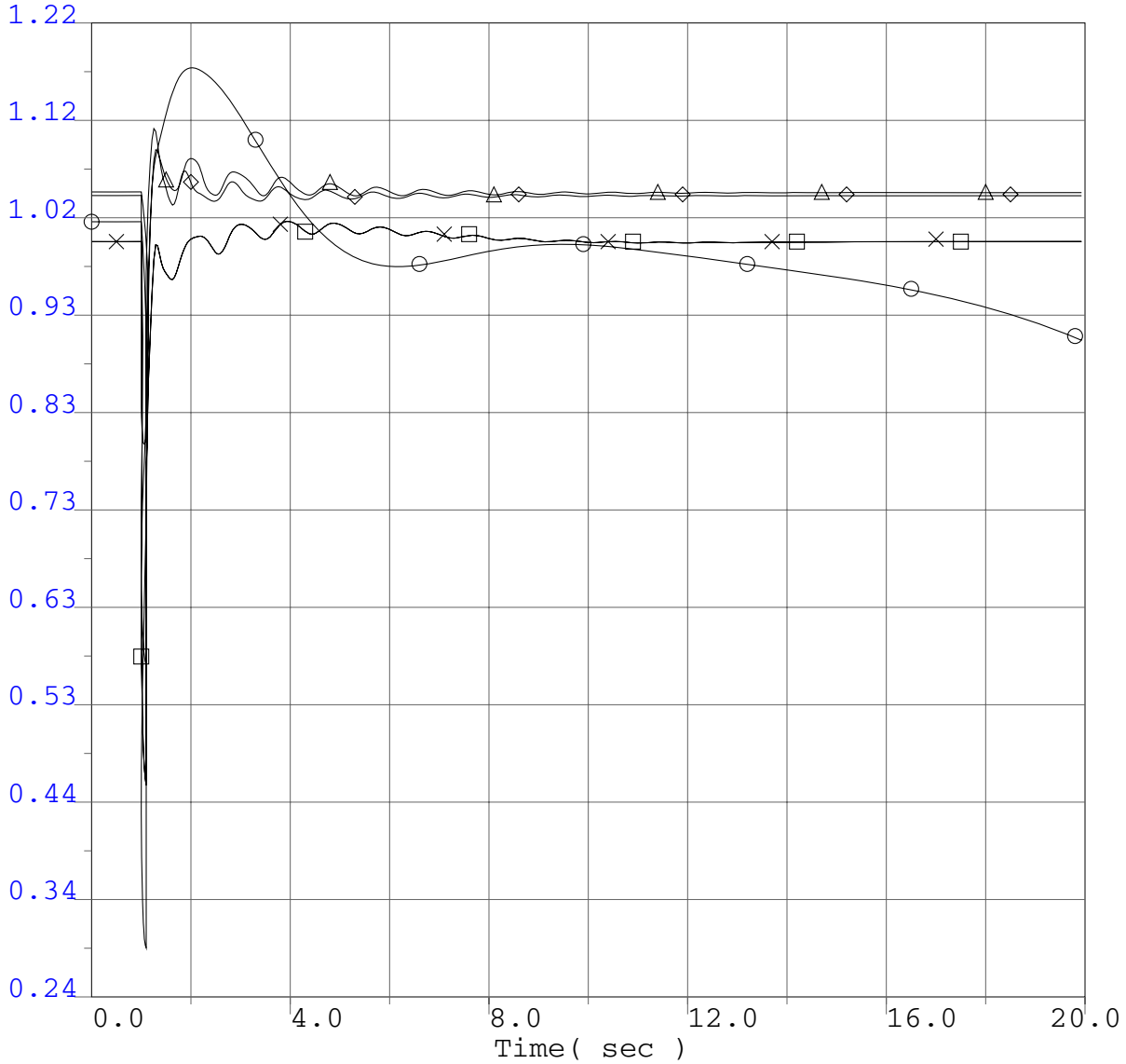

○	0.24	vt	31180	P0411G1	13.8	"1" 1	1.22
×	0.24	vt	31181	P0411G2	13.8	"5" 1	1.22
□	0.24	vt	31182	P0411G3	13.8	"8" 1	1.22
△	0.24	vt	31150	FAIRHAVN	13.8	"1" 1	1.22
◇	0.24	vt	31158	LP SAMOA	12.5	"1" 1	1.22

P0411 Project System Impact Study
2008 Winter Peak Base Case
P0411 @ 166.4MW
Humboldt Bay PP - Bumboldt #1 115kV line outage
3 phase 6 cycle fault at Humboldt Bay PP 115kV bus and clear HBay-Humb #1 115kV

P0411 Project System Impact Study

Project Generator Rotor Speed

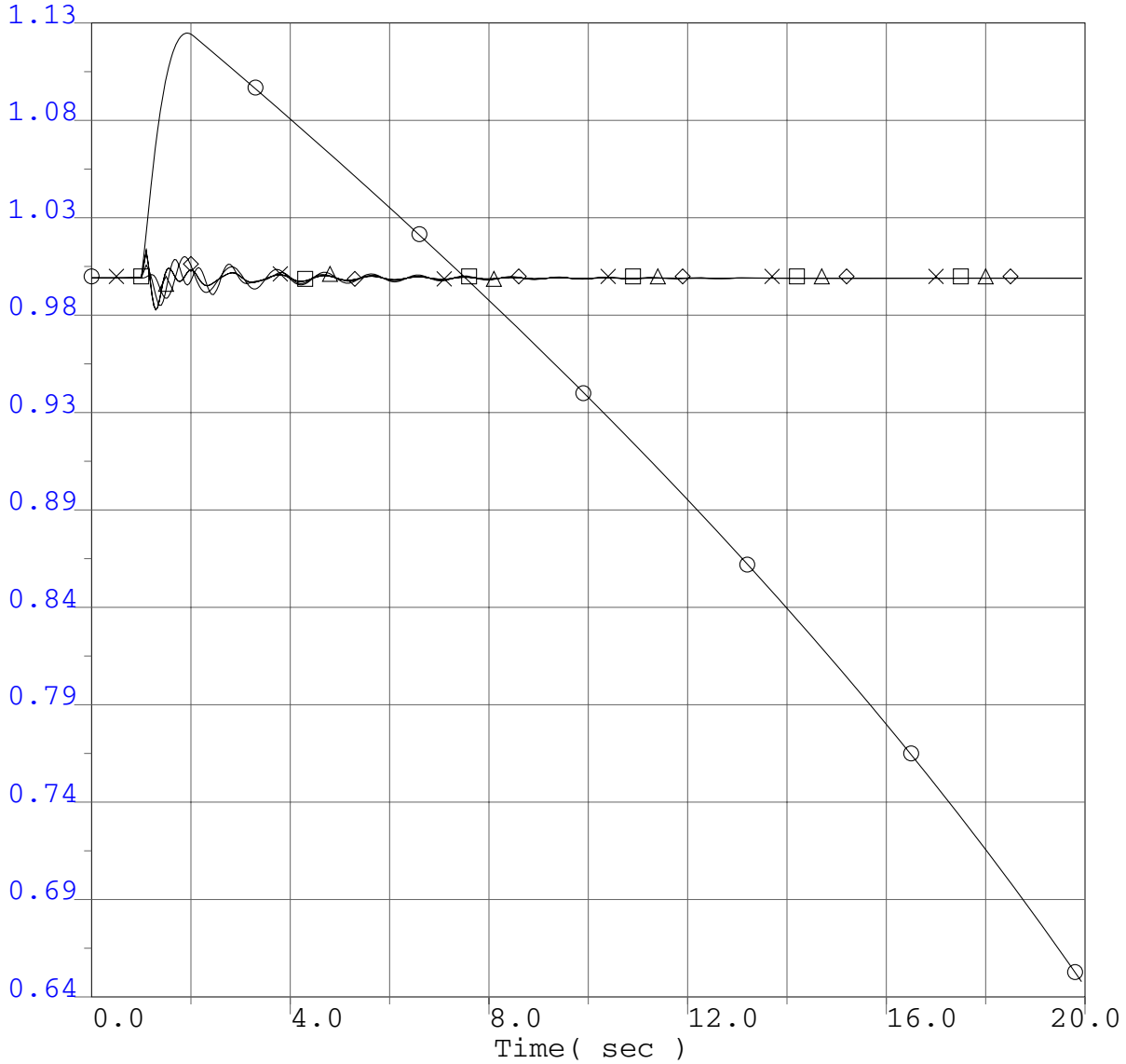

○	0.644	spd	31180	P0411G1	13.8	"1" 1	1.1263
×	0.644	spd	31181	P0411G2	13.8	"5" 1	1.1263
□	0.644	spd	31182	P0411G3	13.8	"8" 1	1.1263
△	0.644	spd	31150	FAIRHAVN	13.8	"1" 1	1.1263
◇	0.644	spd	31158	LP SAMOA	12.5	"1" 1	1.1263

P0411 Project System Impact Study
2008 Winter Peak Base Case
P0411 @ 166.4MW
Humboldt Bay PP - Bumboldt #1 115kV line outage
3 phase 6 cycle fault at Humboldt Bay PP 115kV bus and clear HBay-Humb #1 115kV

P0411 Project System Impact Study

Project Generator Terminal Power

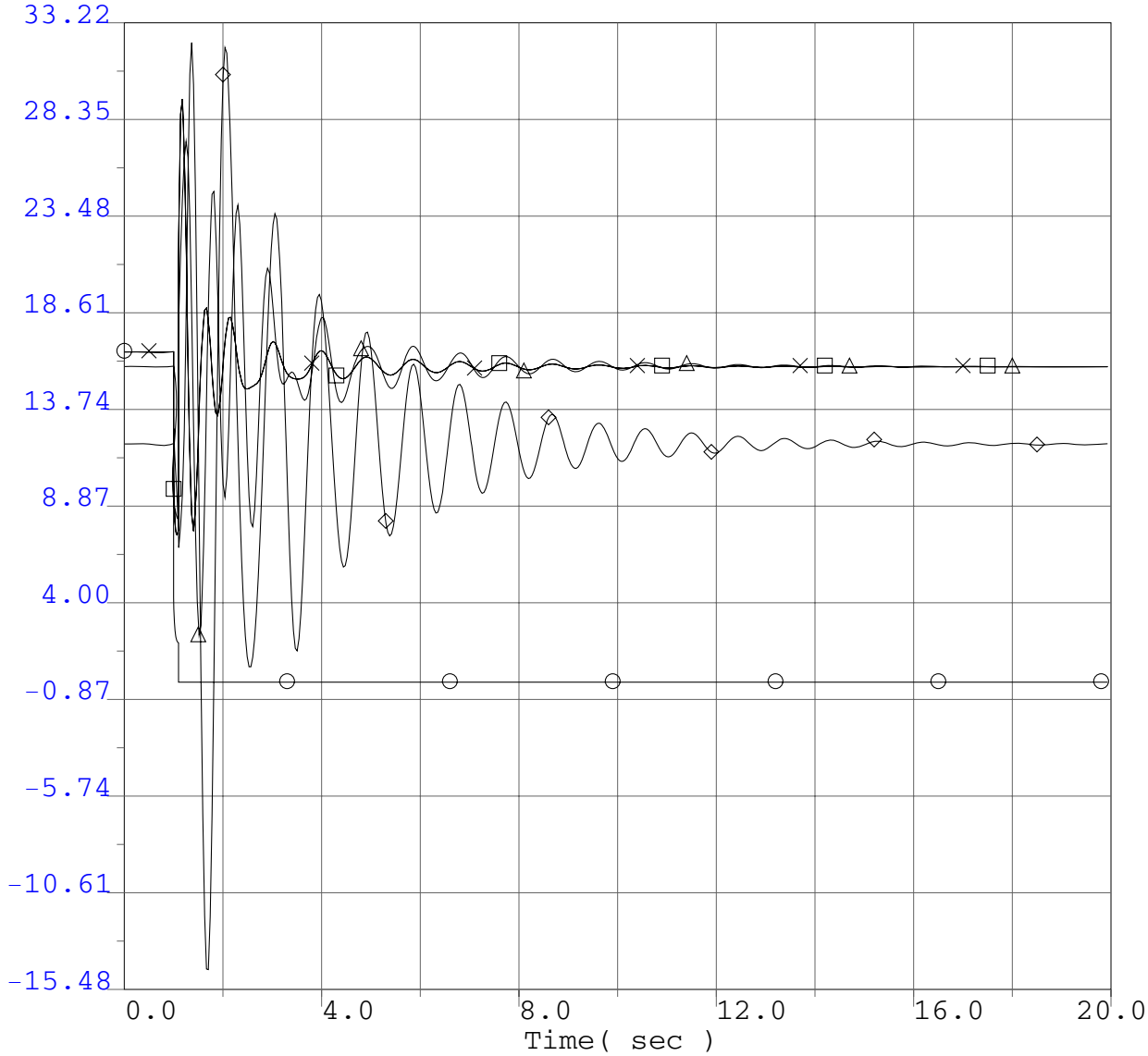

○	-15.48	pg	31180	P0411G1	13.8	"1" 1	33.22
×	-15.48	pg	31181	P0411G2	13.8	"5" 1	33.22
□	-15.48	pg	31182	P0411G3	13.8	"8" 1	33.22
△	-15.48	pg	31150	FAIRHAVN	13.8	"1" 1	33.22
◇	-15.48	pg	31158	LP SAMOA	12.5	"1" 1	33.22

P0411 Project System Impact Study
2008 Winter Peak Base Case
P0411 @ 166.4MW
Humboldt Bay PP - Bumboldt #1 115kV line outage
3 phase 6 cycle fault at Humboldt Bay PP 115kV bus and clear HBay-Humb #1 115kV

P0411 Project System Impact Study

Project Generator Terminal Reactive Power

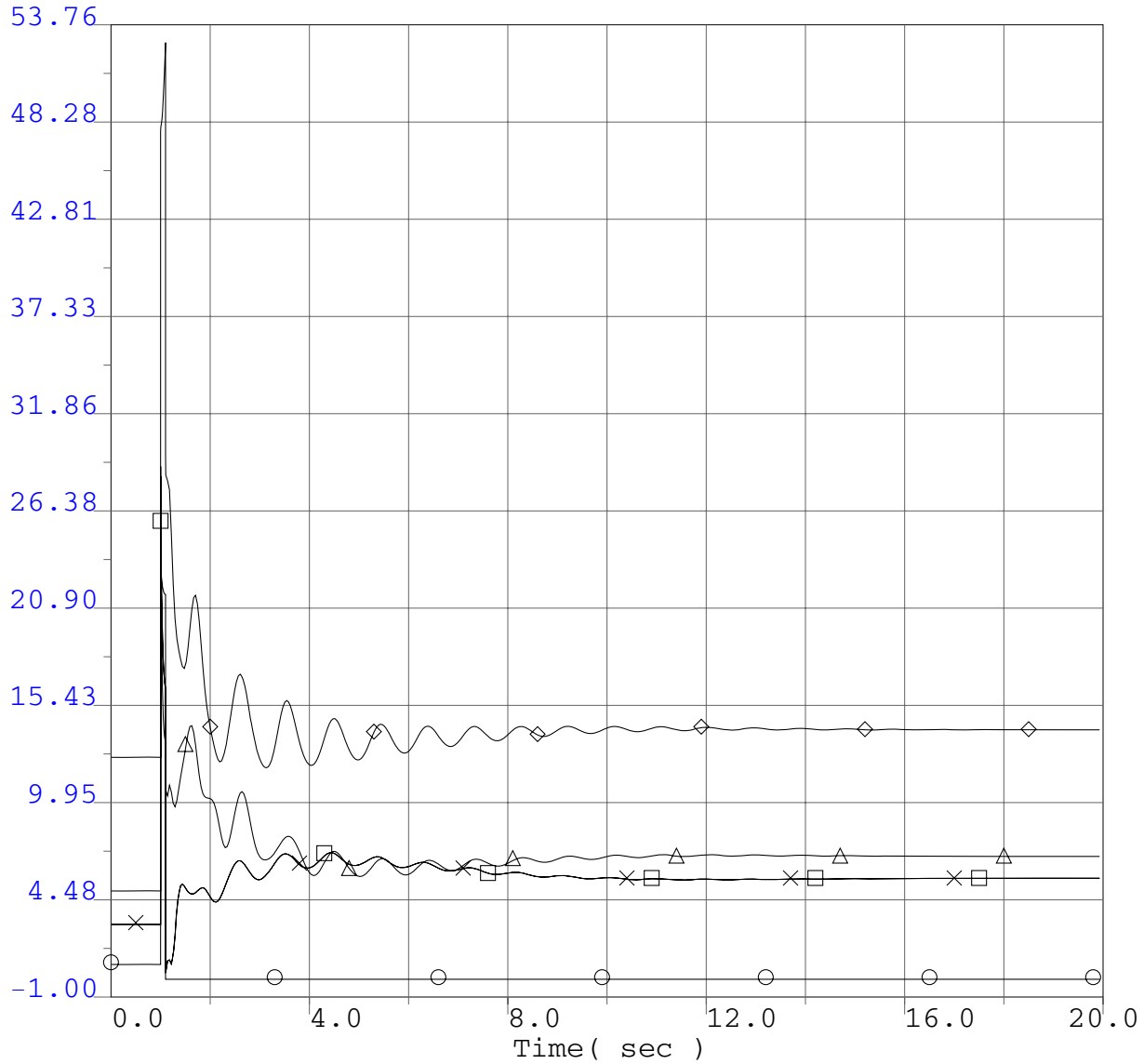

○	-1.0	qg	31180	P0411G1	13.8	"1" 1	53.76
×	-1.0	qg	31181	P0411G2	13.8	"5" 1	53.76
□	-1.0	qg	31182	P0411G3	13.8	"8" 1	53.76
△	-1.0	qg	31150	FAIRHAVN	13.8	"1" 1	53.76
◇	-1.0	qg	31158	LP SAMOA	12.5	"1" 1	53.76

P0411 Project System Impact Study
2008 Winter Peak Base Case
P0411 @ 166.4MW
Humboldt Bay PP - Bumboldt #1 115kV line outage
3 phase 6 cycle fault at Humboldt Bay PP 115kV bus and clear HBay-Humb #1 115kV

P0411 Project System Impact Study

Selected WECC Bus Voltage Plots

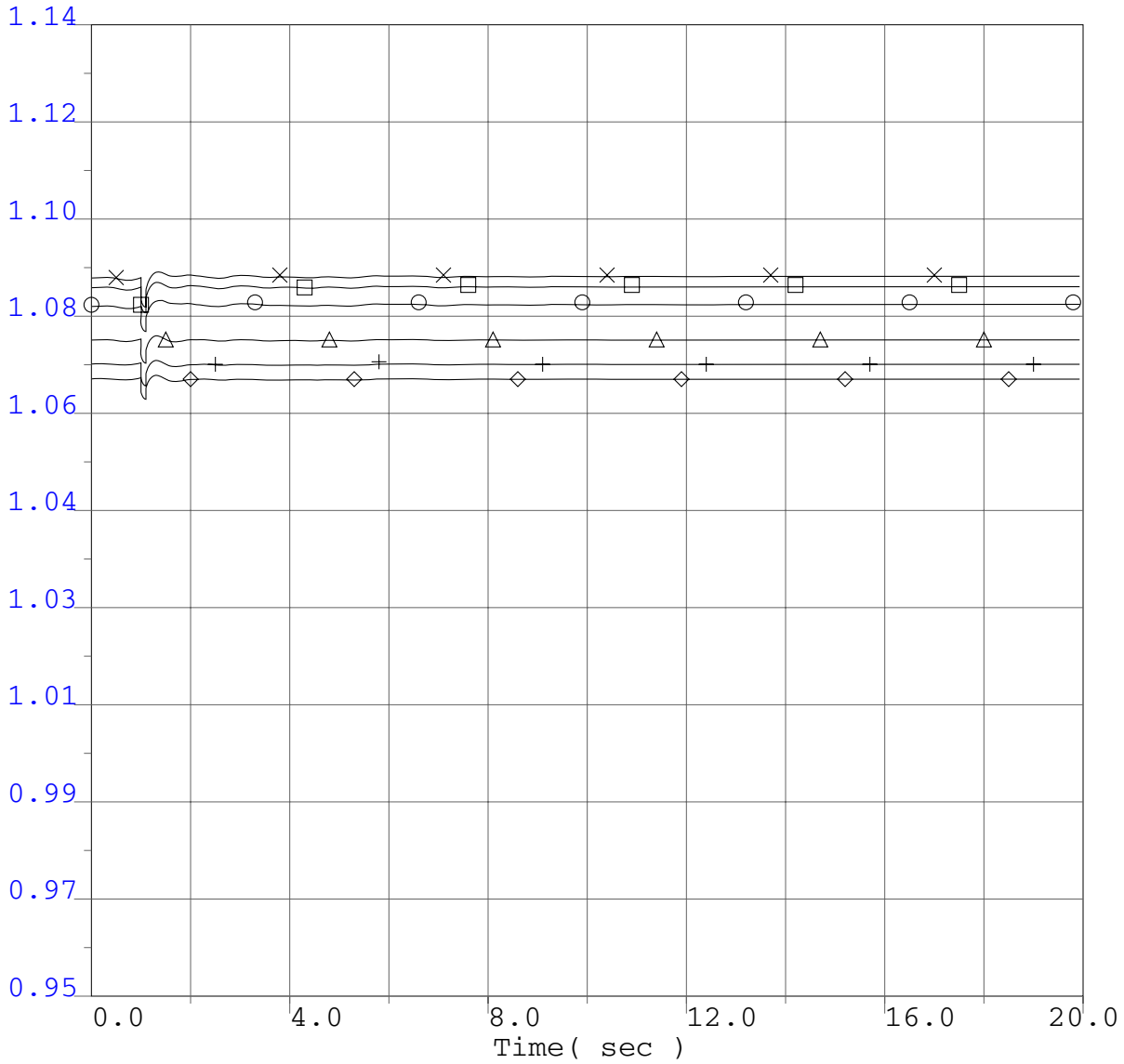

○	0.95	vbus	40687	MALIN	500.0	"*" 1	1.14
×	0.95	vbus	30005	ROUND MT	500.0	"*" 1	1.14
□	0.95	vbus	30015	TABLE MT	500.0	"*" 1	1.14
△	0.95	vbus	30030	VACA-DIX	500.0	"*" 1	1.14
◇	0.95	vbus	30040	TESLA	500.0	"*" 1	1.14
+	0.95	vbus	30035	TRACY	500.0	"*" 1	1.14

P0411 Project System Impact Study
2008 Winter Peak Base Case
P0411 @ 166.4MW
Humboldt Bay PP - Bumboldt #1 115kV line outage
3 phase 6 cycle fault at Humboldt Bay PP 115kV bus and clear HBay-Humb #1 115kV

P0411 Project System Impact Study

Selected WECC Bus Voltage Plots

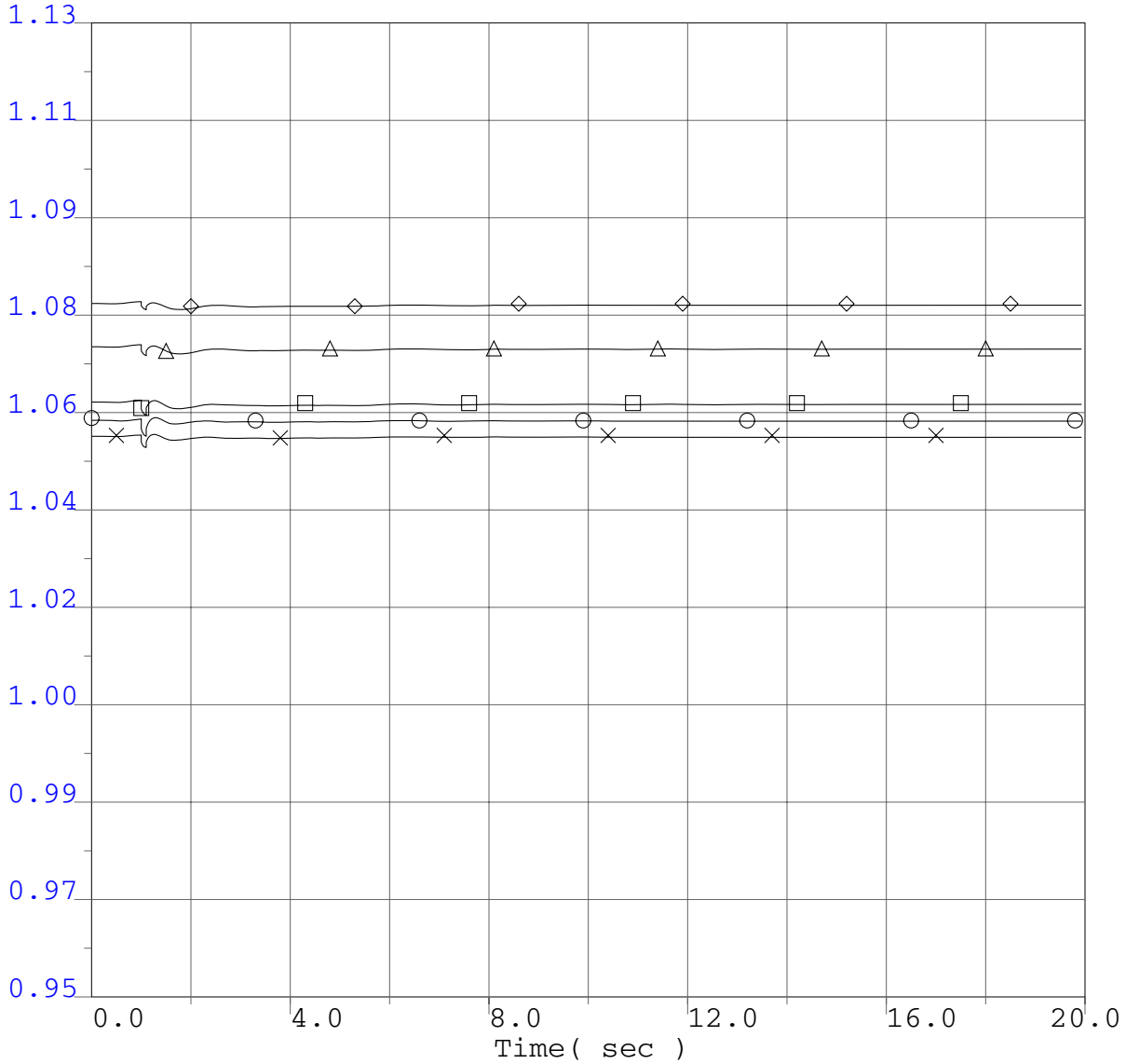

○ 0.95	vbus	30042	METCALF	500.0	"*" 1	1.13
× 0.95	vbus	30045	MOSSLAND	500.0	"*" 1	1.13
□ 0.95	vbus	30050	LOSBANOS	500.0	"*" 1	1.13
△ 0.95	vbus	30055	GATES	500.0	"*" 1	1.13
◇ 0.95	vbus	30060	MIDWAY	500.0	"*" 1	1.13

P0411 Project System Impact Study
2008 Winter Peak Base Case
P0411 @ 166.4MW
Humboldt Bay PP - Bumboldt #1 115kV line outage
3 phase 6 cycle fault at Humboldt Bay PP 115kV bus and clear HBay-Humb #1 115kV

P0411 Project System Impact Study

Selected WECC Bus Voltage Plots

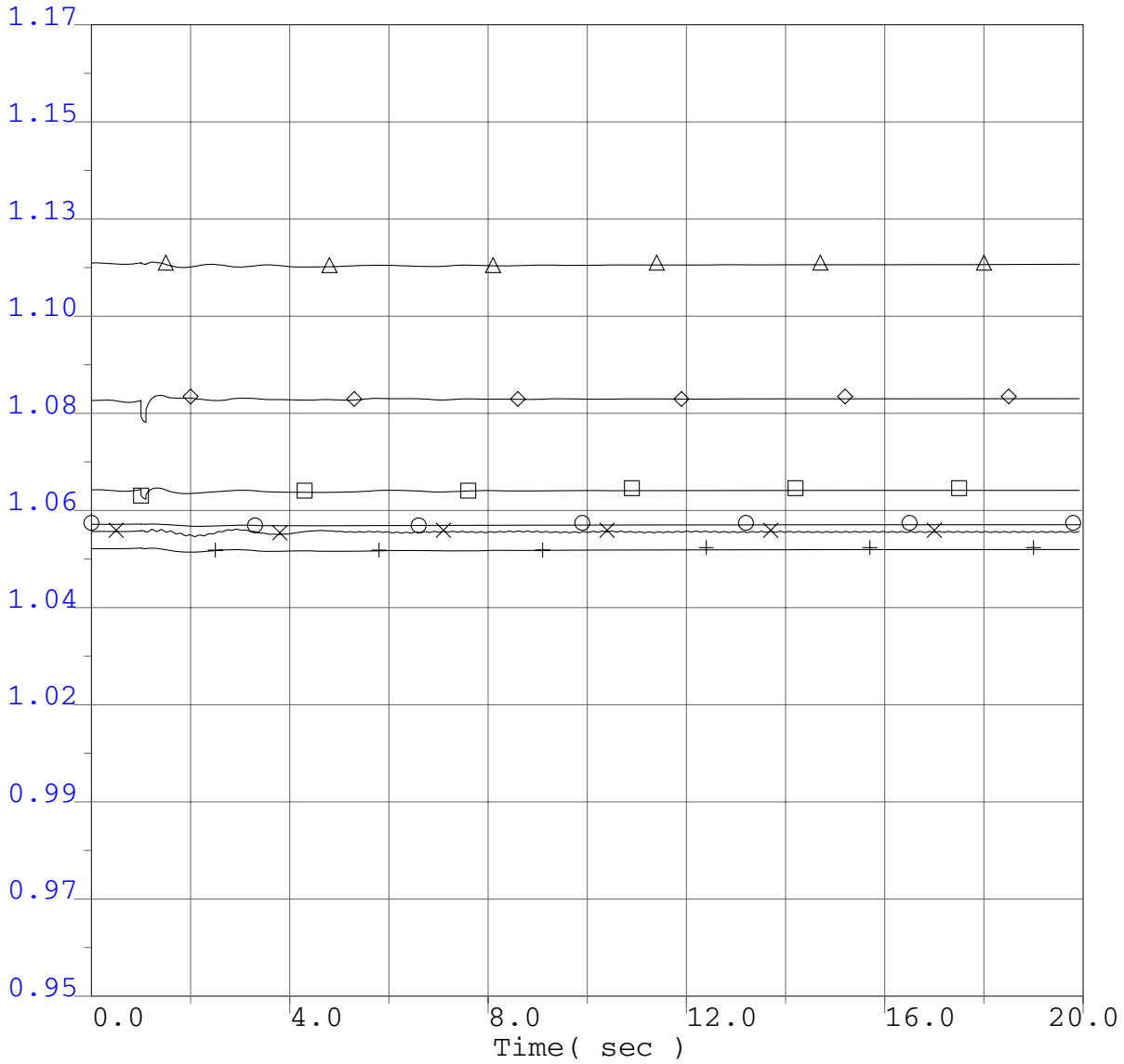

○	0.95	vbus	14001	FOURCORN	500.0	"*" 1	1.17
×	0.95	vbus	50703	NIC500	500.0	"*" 1	1.17
□	0.95	vbus	60240	MIDPOINT	500.0	"*" 1	1.17
△	0.95	vbus	62012	TOWN2	500.0	"*" 1	1.17
◇	0.95	vbus	40687	MALIN	500.0	"*" 1	1.17
+	0.95	vbus	66340	SIGURD	345.0	"*" 1	1.17

P0411 Project System Impact Study
2008 Winter Peak Base Case
P0411 @ 166.4MW
Humboldt Bay PP - Bumboldt #1 115kV line outage
3 phase 6 cycle fault at Humboldt Bay PP 115kV bus and clear HBay-Humb #1 115kV

P0411 Project System Impact Study

Selected WECC Bus Voltage Plots

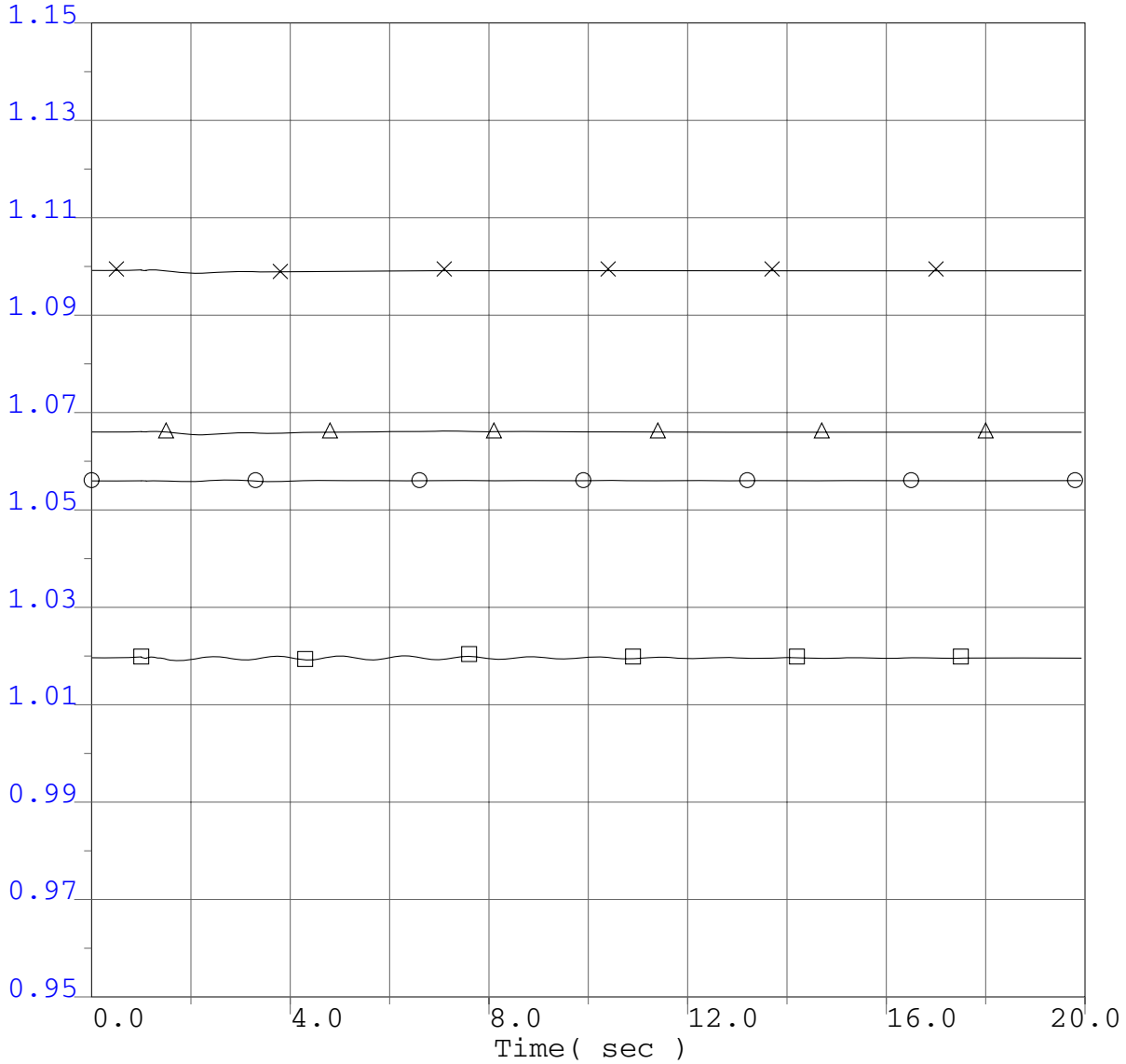

○ 0.95	vbus	54150	LANGDON2	500.0	"*"	1	1.15
× 0.95	vbus	14003	NAVAJO	500.0	"*"	1	1.15
□ 0.95	vbus	24153	VESTAL	230.0	"*"	1	1.15
△ 0.95	vbus	22360	IMPRLVLY	500.0	"*"	1	1.15

P0411 Project System Impact Study
2008 Winter Peak Base Case
P0411 @ 166.4MW
Humboldt Bay PP - Bumboldt #1 115kV line outage
3 phase 6 cycle fault at Humboldt Bay PP 115kV bus and clear HBay-Humb #1 115kV

P0411 Project System Impact Study

Selected WECC Bus Frequency Plots

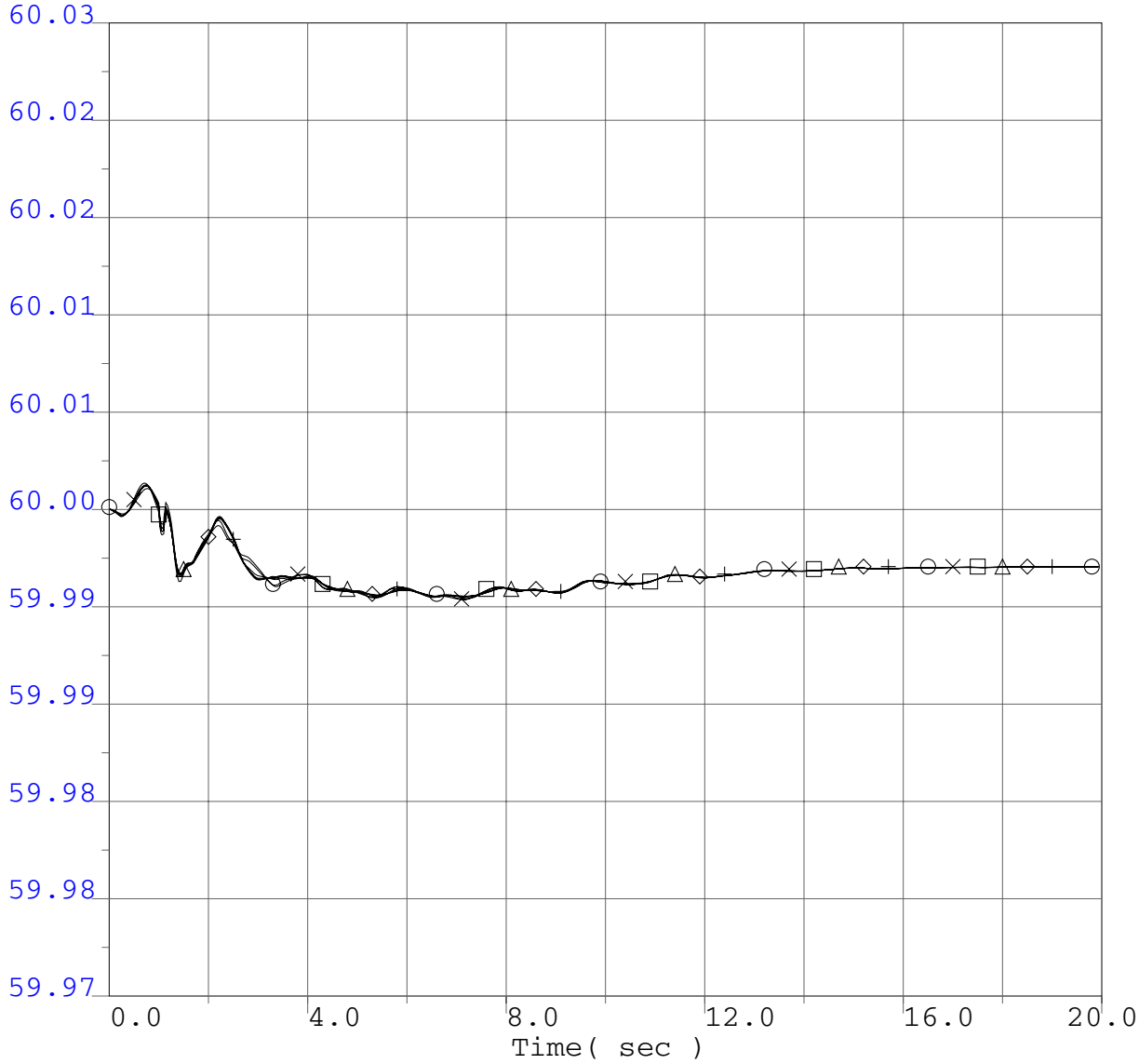

○	59.97	fbus	40687	MALIN	500.0	"*" 1	60.03
×	59.97	fbus	30005	ROUND MT	500.0	"*" 1	60.03
□	59.97	fbus	30015	TABLE MT	500.0	"*" 1	60.03
△	59.97	fbus	30030	VACA-DIX	500.0	"*" 1	60.03
◇	59.97	fbus	30040	TESLA	500.0	"*" 1	60.03
+	59.97	fbus	30035	TRACY	500.0	"*" 1	60.03

P0411 Project System Impact Study
2008 Winter Peak Base Case
P0411 @ 166.4MW
Humboldt Bay PP - Bumboldt #1 115kV line outage
3 phase 6 cycle fault at Humboldt Bay PP 115kV bus and clear HBay-Humb #1 115kV

P0411 Project System Impact Study

Selected WECC Bus Frequency Plots

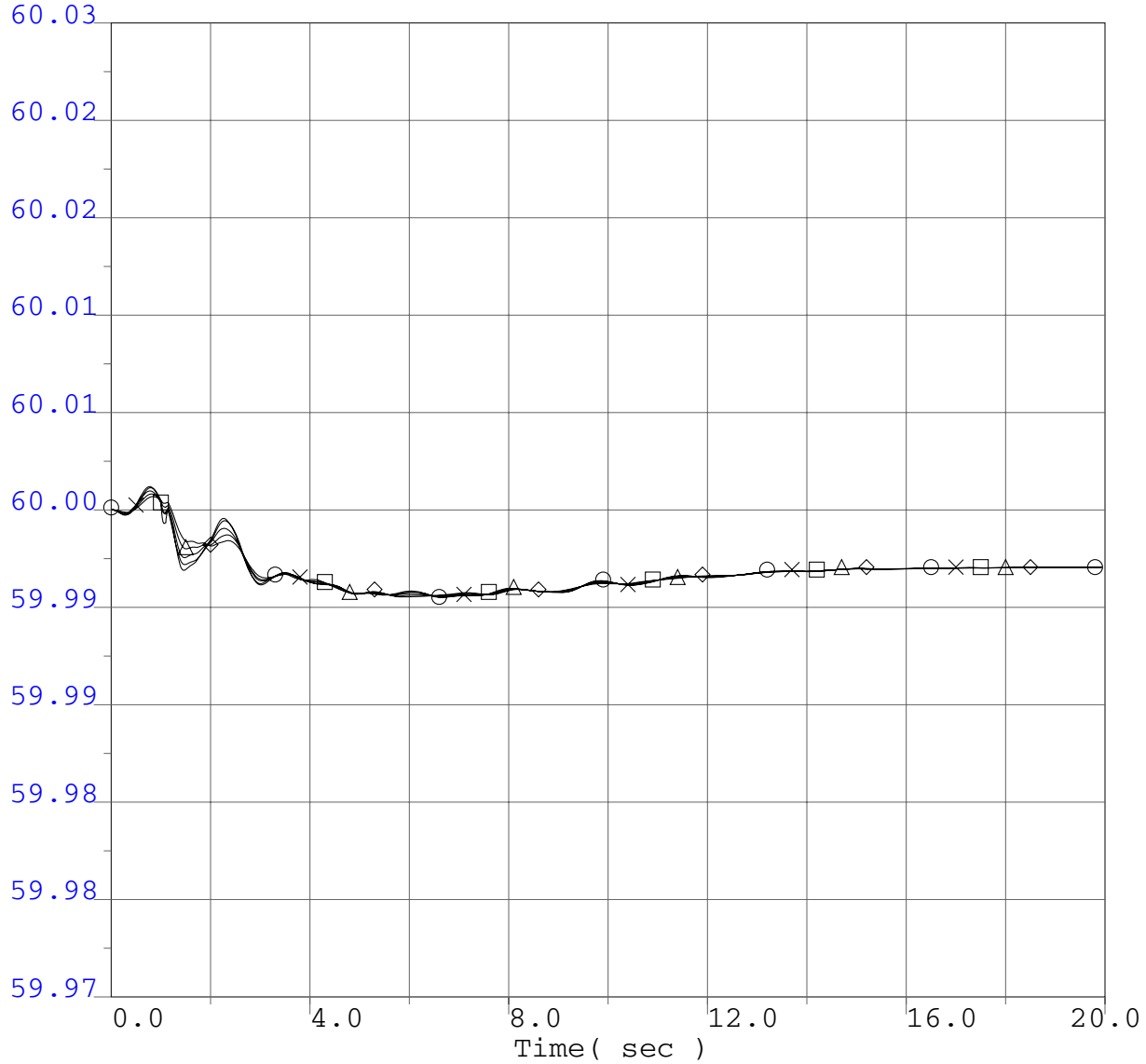

○ 59.97	fbus	30042	METCALF	500.0	"*"	1	60.03
× 59.97	fbus	30045	MOSSLAND	500.0	"*"	1	60.03
□ 59.97	fbus	30050	LOSBANOS	500.0	"*"	1	60.03
△ 59.97	fbus	30055	GATES	500.0	"*"	1	60.03
◇ 59.97	fbus	30060	MIDWAY	500.0	"*"	1	60.03

P0411 Project System Impact Study
2008 Winter Peak Base Case
P0411 @ 166.4MW
Humboldt Bay PP - Bumboldt #1 115kV line outage
3 phase 6 cycle fault at Humboldt Bay PP 115kV bus and clear HBay-Humb #1 115kV

P0411 Project System Impact Study

Selected WECC Bus Frequency Plots

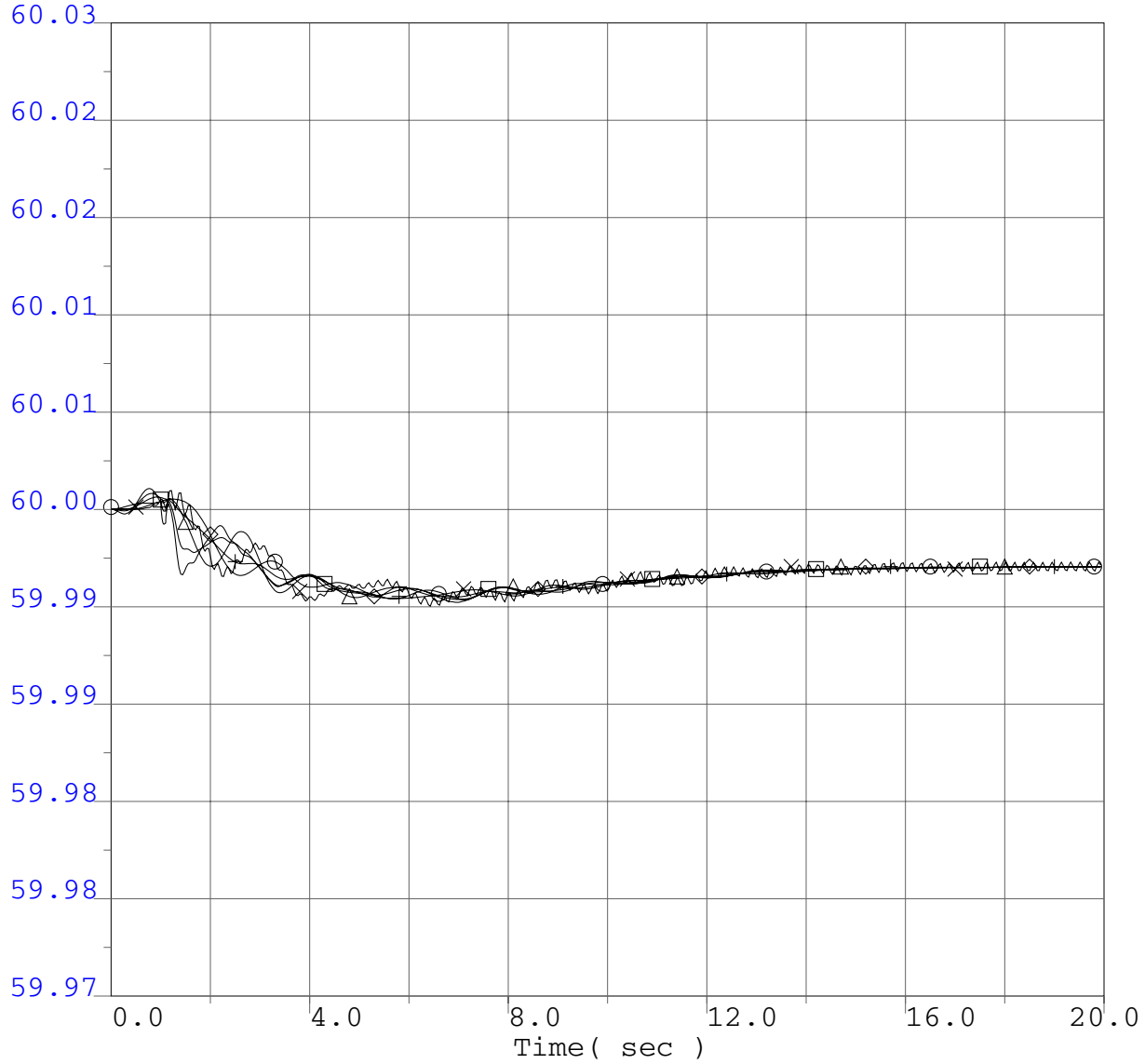

○ 59.97	fbus	14001	FOURCORN	500.0	"*"	1	60.03
× 59.97	fbus	50703	NIC500	500.0	"*"	1	60.03
□ 59.97	fbus	60240	MIDPOINT	500.0	"*"	1	60.03
△ 59.97	fbus	62012	TOWN2	500.0	"*"	1	60.03
◇ 59.97	fbus	40687	MALIN	500.0	"*"	1	60.03
+ 59.97	fbus	66340	SIGURD	345.0	"*"	1	60.03

P0411 Project System Impact Study
2008 Winter Peak Base Case
P0411 @ 166.4MW
Humboldt Bay PP - Bumboldt #1 115kV line outage
3 phase 6 cycle fault at Humboldt Bay PP 115kV bus and clear HBay-Humb #1 115kV

P0411 Project System Impact Study

Selected WECC Bus Frequency Plots

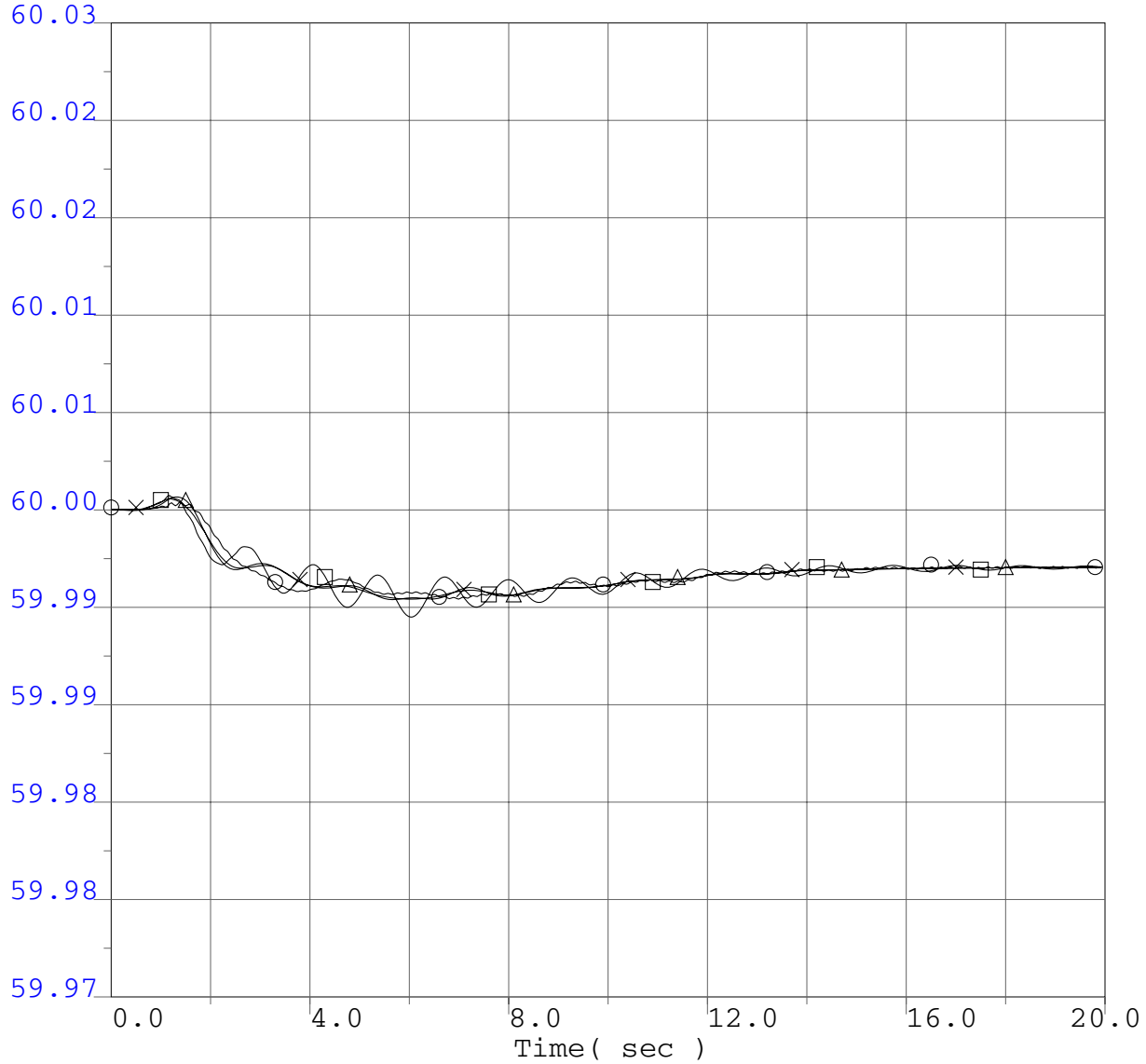

○ 59.97	fbus	54150	LANGDON2	500.0	"*"	1	60.03
× 59.97	fbus	14003	NAVAJO	500.0	"*"	1	60.03
□ 59.97	fbus	24153	VESTAL	230.0	"*"	1	60.03
△ 59.97	fbus	22360	IMPRLVLY	500.0	"*"	1	60.03

P0411 Project System Impact Study
2008 Winter Peak Base Case
P0411 @ 166.4MW
Humboldt Bay PP - Bumboldt #1 115kV line outage
3 phase 6 cycle fault at Humboldt Bay PP 115kV bus and clear HBay-Humb #1 115kV

P0411 Project System Impact Study

WECC Generator Rotor Angle

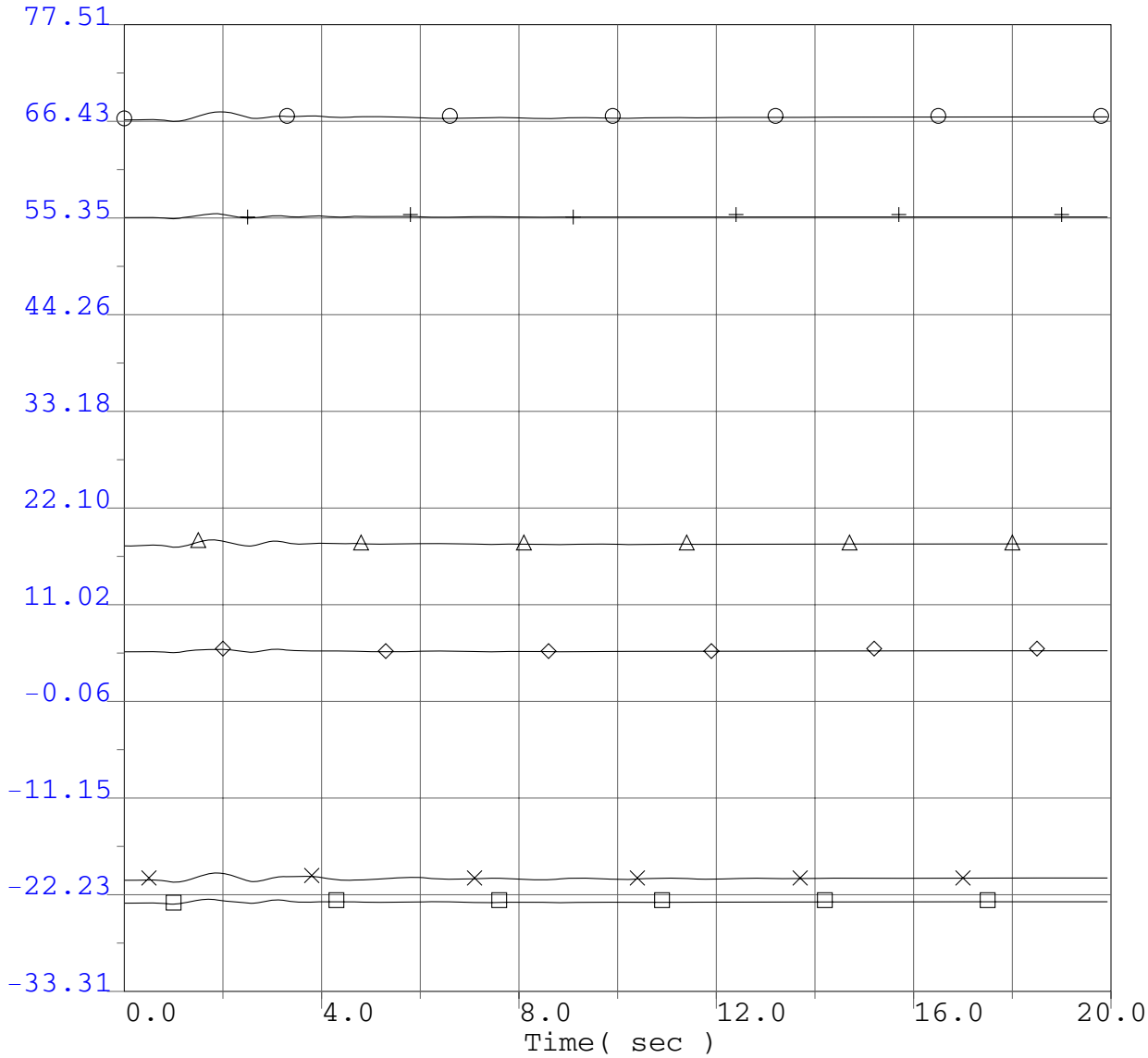

○	-33.31	ang	14914	FCNGN4CC	22.0	"H" 1	77.51
×	-33.31	ang	50500	GMS G6	13.8	"1" 1	77.51
□	-33.31	ang	60100	BRWNL 5	13.8	"1" 1	77.51
△	-33.31	ang	62048	COLSTP 3	26.0	"1" 1	77.51
◇	-33.31	ang	41701	JONDAY01	13.8	"1" 1	77.51
+	-33.31	ang	36411	DIABLO 1	25.0	"1" 1	77.51

P0411 Project System Impact Study
2008 Winter Peak Base Case
P0411 @ 166.4MW
Humboldt Bay PP - Bumboldt #1 115kV line outage
3 phase 6 cycle fault at Humboldt Bay PP 115kV bus and clear HByHumb #1 115kV

P0411 Project System Impact Study

WECC Generator Rotor Angle

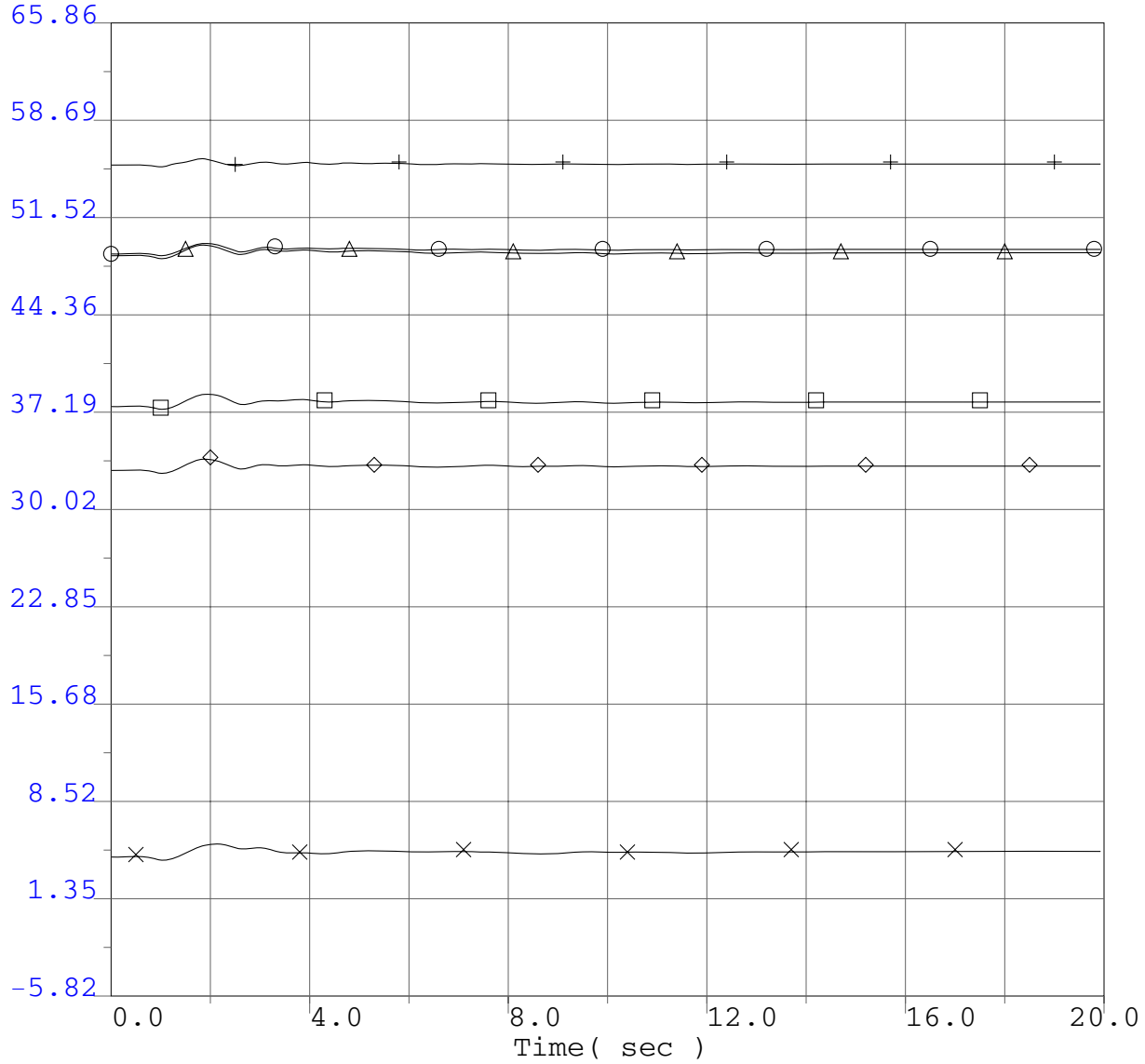

○	-5.82	ang	65490	EHUNTR 1	24.0	"1" 1	65.86
×	-5.82	ang	54280	SUND#2GN	18.0	"2" 1	65.86
□	-5.82	ang	79151	GLENC3-4	13.8	"3" 1	65.86
△	-5.82	ang	24130	S.ONOFR3	22.0	"3" 1	65.86
◇	-5.82	ang	22244	ENCINA 5	24.0	"1" 1	65.86
+	-5.82	ang	36411	DIABLO 1	25.0	"1" 1	65.86

P0411 Project System Impact Study
2008 Winter Peak Base Case
P0411 @ 166.4MW
Humboldt Bay PP - Bumboldt #1 115kV line outage
3 phase 6 cycle fault at Humboldt Bay PP 115kV bus and clear HBay-Humb #1 115kV

P0411 Project System Impact Study

Selected PG&E Transmission Line Flows (MW)

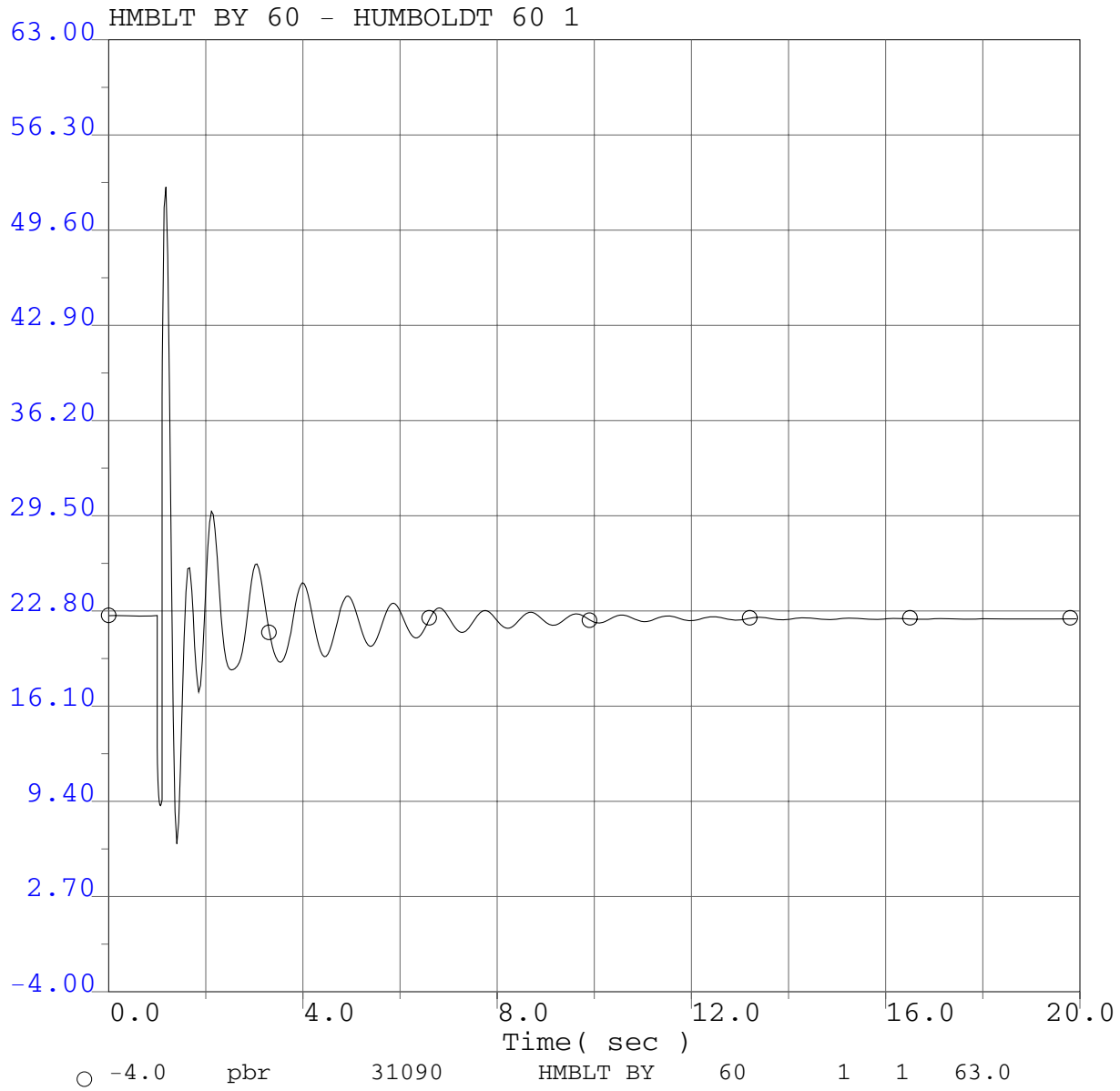

P0411 Project System Impact Study
2008 Winter Peak Base Case
P0411 @ 166.4MW
Humboldt Bay PP - Bumboldt #1 115kV line outage
3 phase 6 cycle fault at Humboldt Bay PP 115kV bus and clear HByHumb #1 115kV

P0411 Project System Impact Study

Selected PG&E Transmission Line Flows (MW)

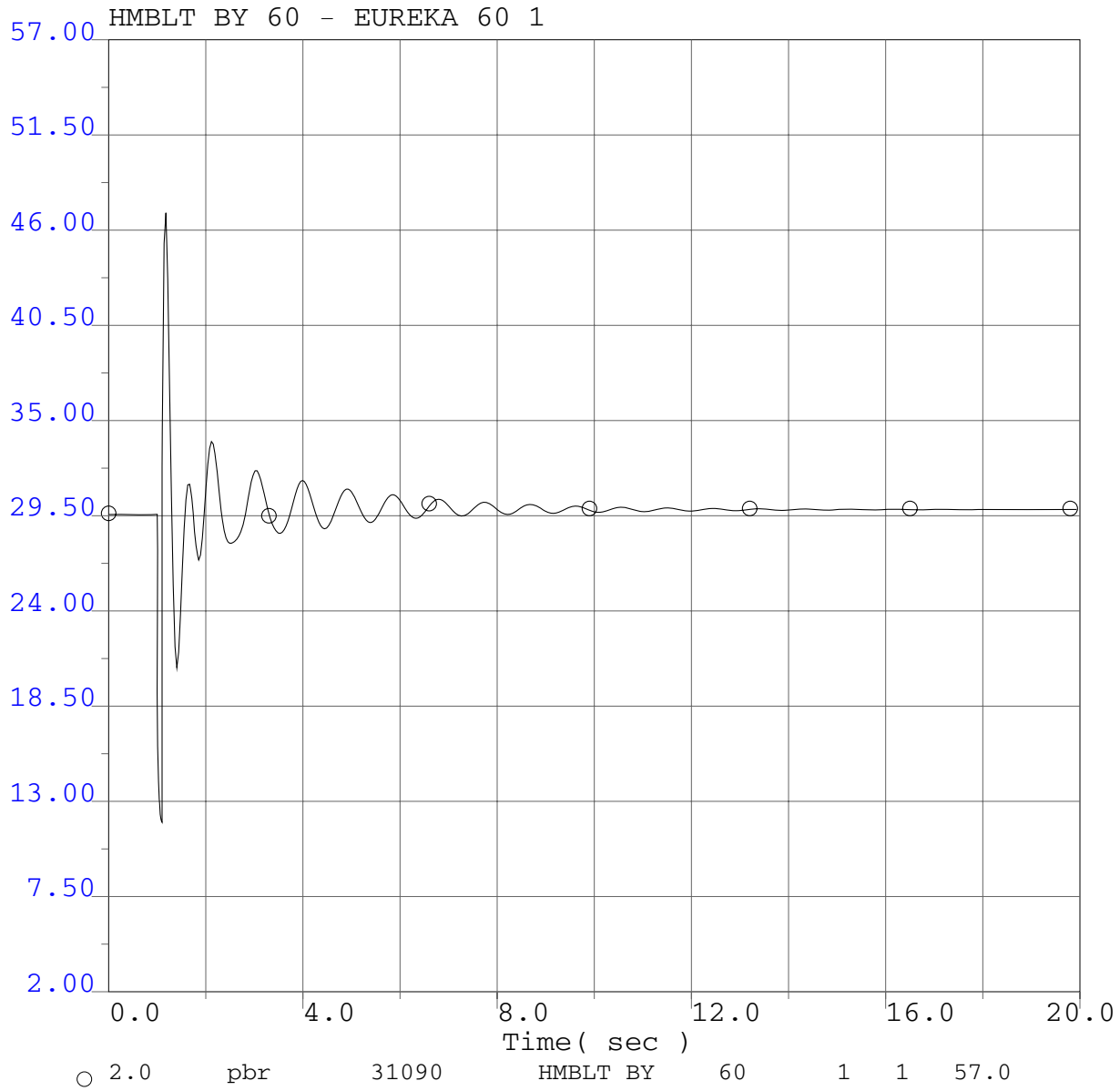

P0411 Project System Impact Study
2008 Winter Peak Base Case
P0411 @ 166.4MW
Humboldt Bay PP - Bumboldt #1 115kV line outage
3 phase 6 cycle fault at Humboldt Bay PP 115kV bus and clear HBay-Humb #1 115kV

P0411 Project System Impact Study

Selected PG&E Transmission Line Flows (MW)

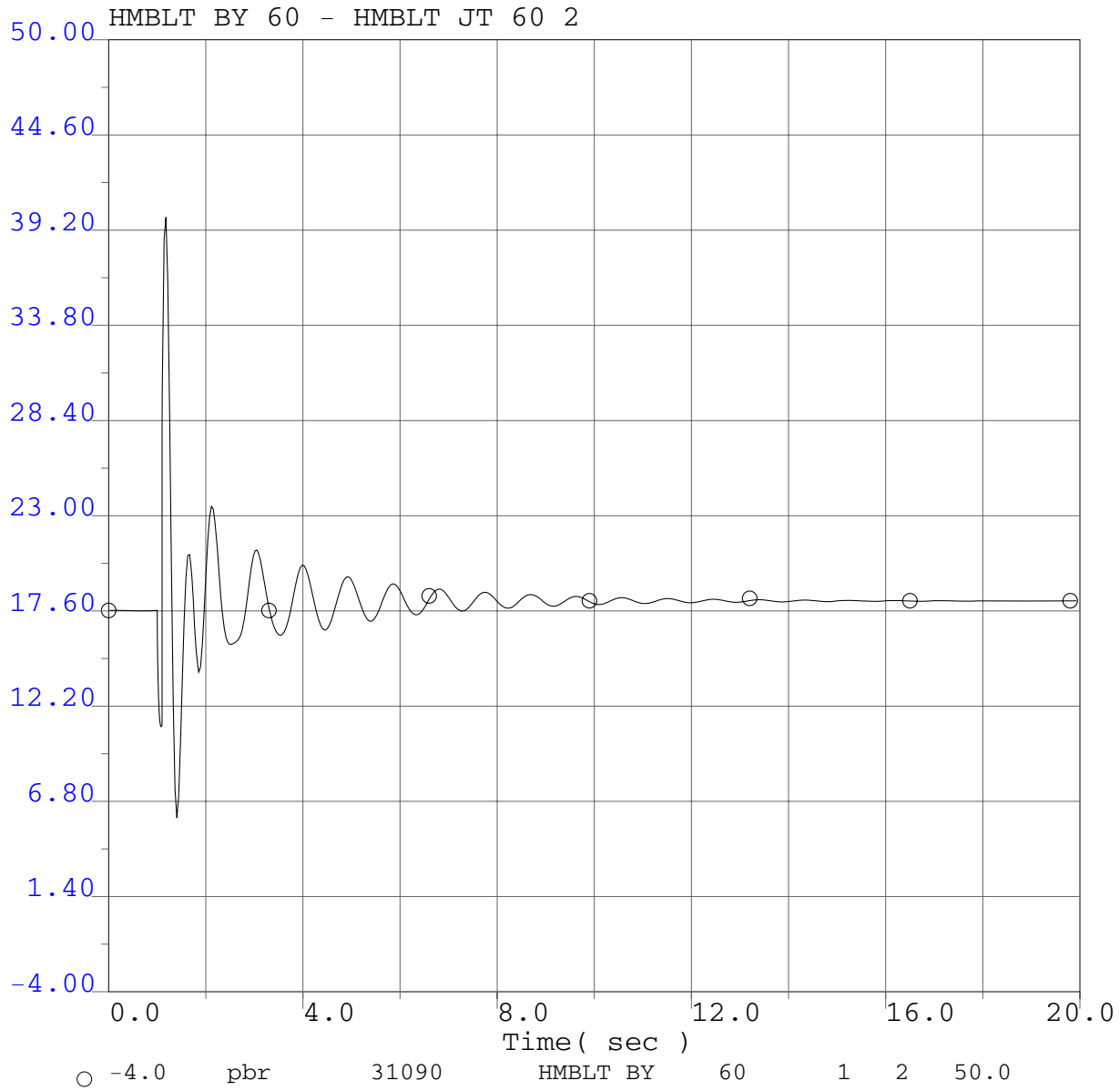

P0411 Project System Impact Study
2008 Winter Peak Base Case
P0411 @ 166.4MW
Humboldt Bay PP - Bumboldt #1 115kV line outage
3 phase 6 cycle fault at Humboldt Bay PP 115kV bus and clear HByHumb #1 115kV

P0411 Project System Impact Study

Selected PG&E Transmission Line Flows (MW)

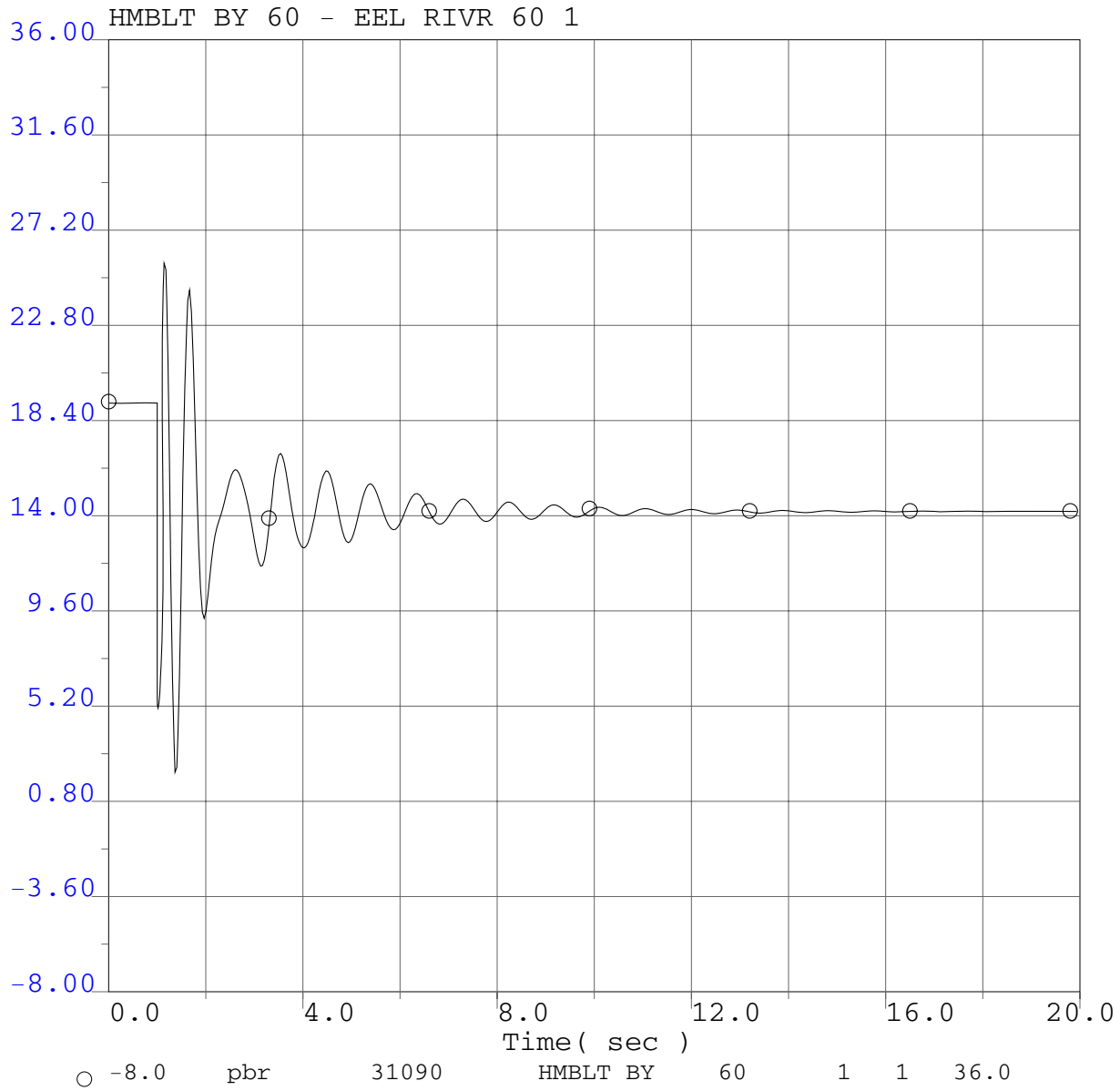

P0411 Project System Impact Study
2008 Winter Peak Base Case
P0411 @ 166.4MW
Humboldt Bay PP - Bumboldt #1 115kV line outage
3 phase 6 cycle fault at Humboldt Bay PP 115kV bus and clear HBay-Humb #1 115kV

P0411 Project System Impact Study

Selected PG&E Transmission Line Flows (MW)

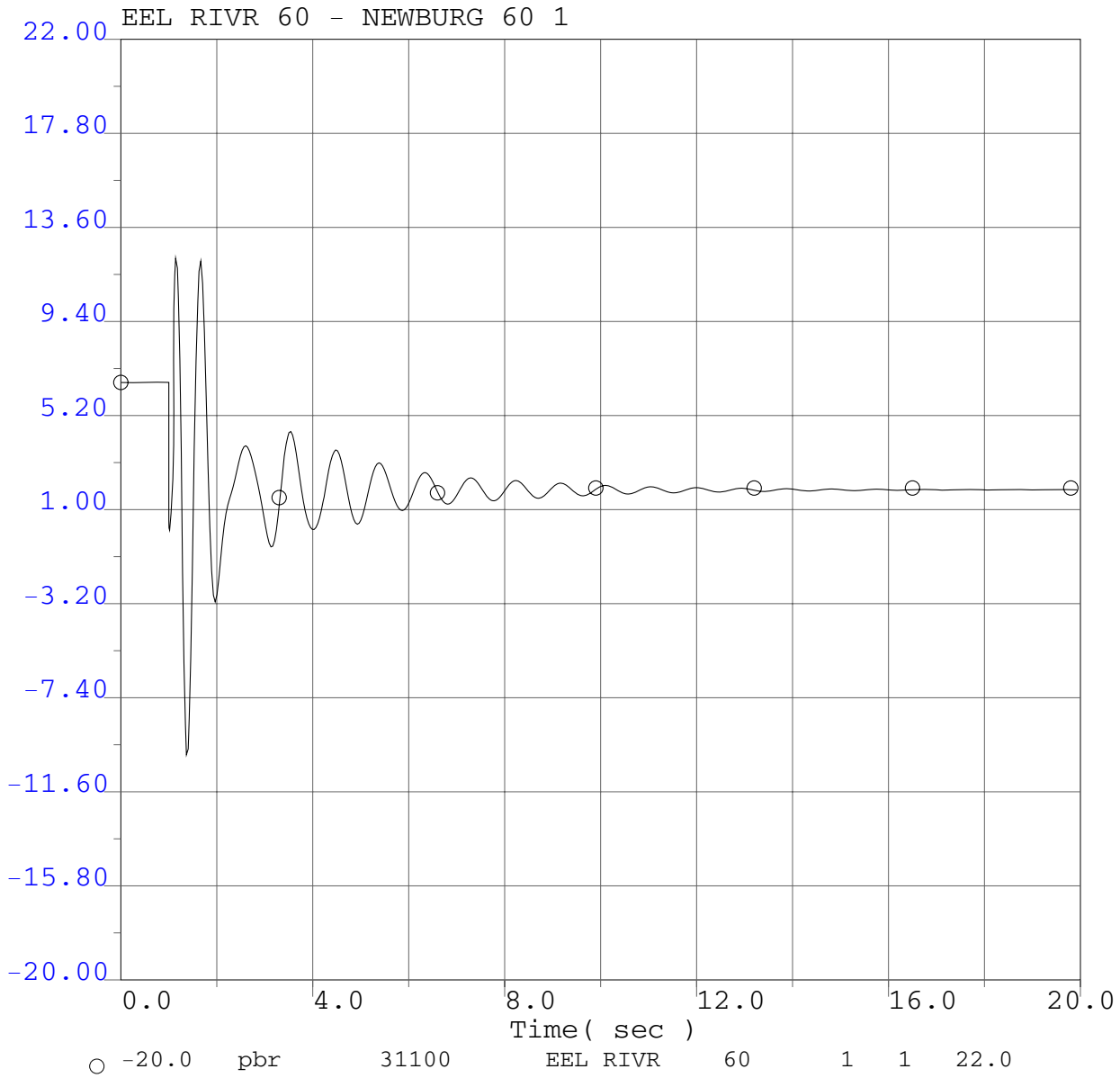

P0411 Project System Impact Study
2008 Winter Peak Base Case
P0411 @ 166.4MW
Humboldt Bay PP - Bumboldt #1 115kV line outage
3 phase 6 cycle fault at Humboldt Bay PP 115kV bus and clear HBay-Humb #1 115kV

P0411 Project System Impact Study

Selected PG&E Transmission Line Flows (MW)

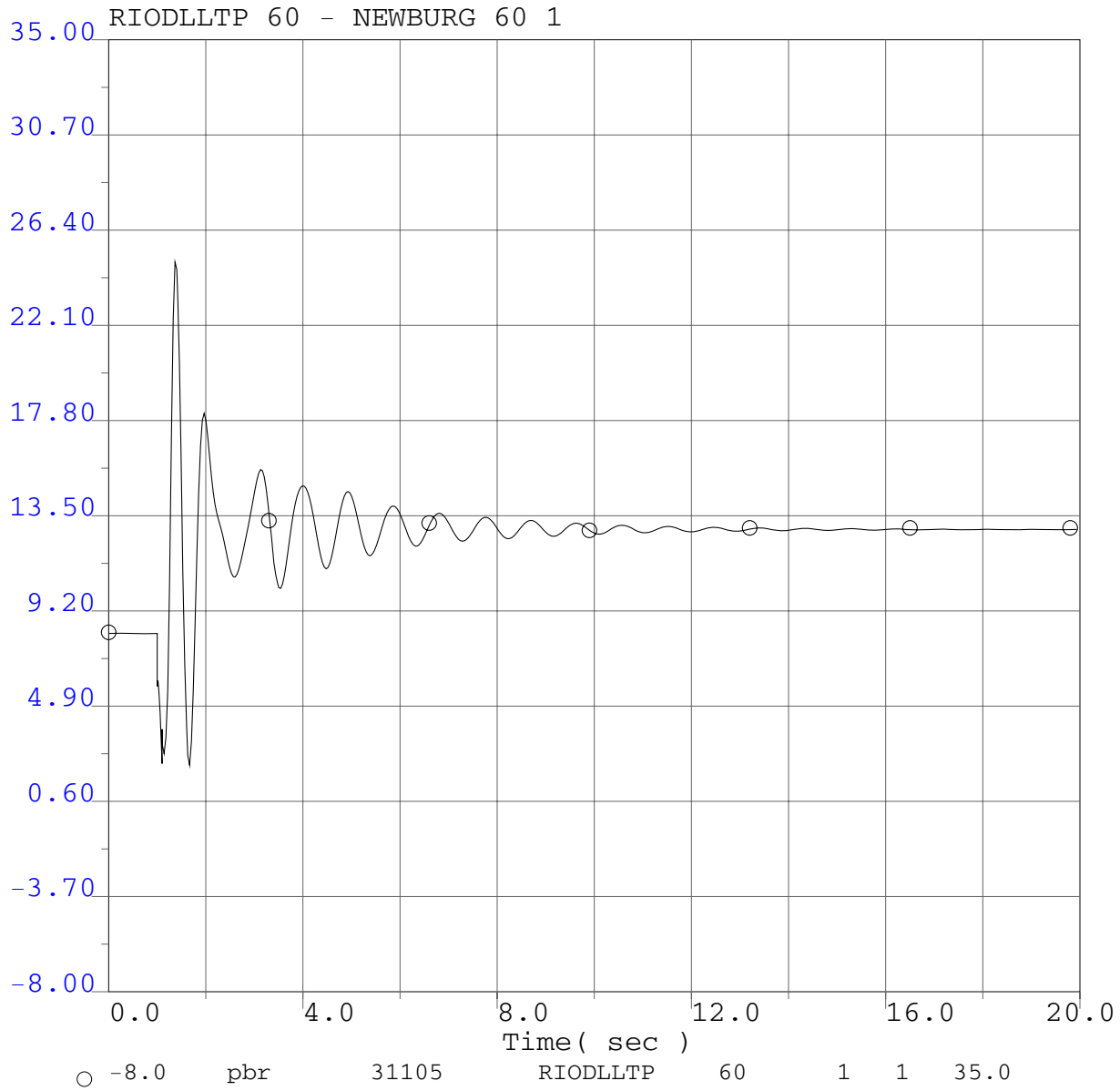

P0411 Project System Impact Study
2008 Winter Peak Base Case
P0411 @ 166.4MW
Humboldt Bay PP - Bumboldt #1 115kV line outage
3 phase 6 cycle fault at Humboldt Bay PP 115kV bus and clear HBay-Humb #1 115kV

P0411 Project System Impact Study

Selected PG&E Transmission Line Flows (MW)

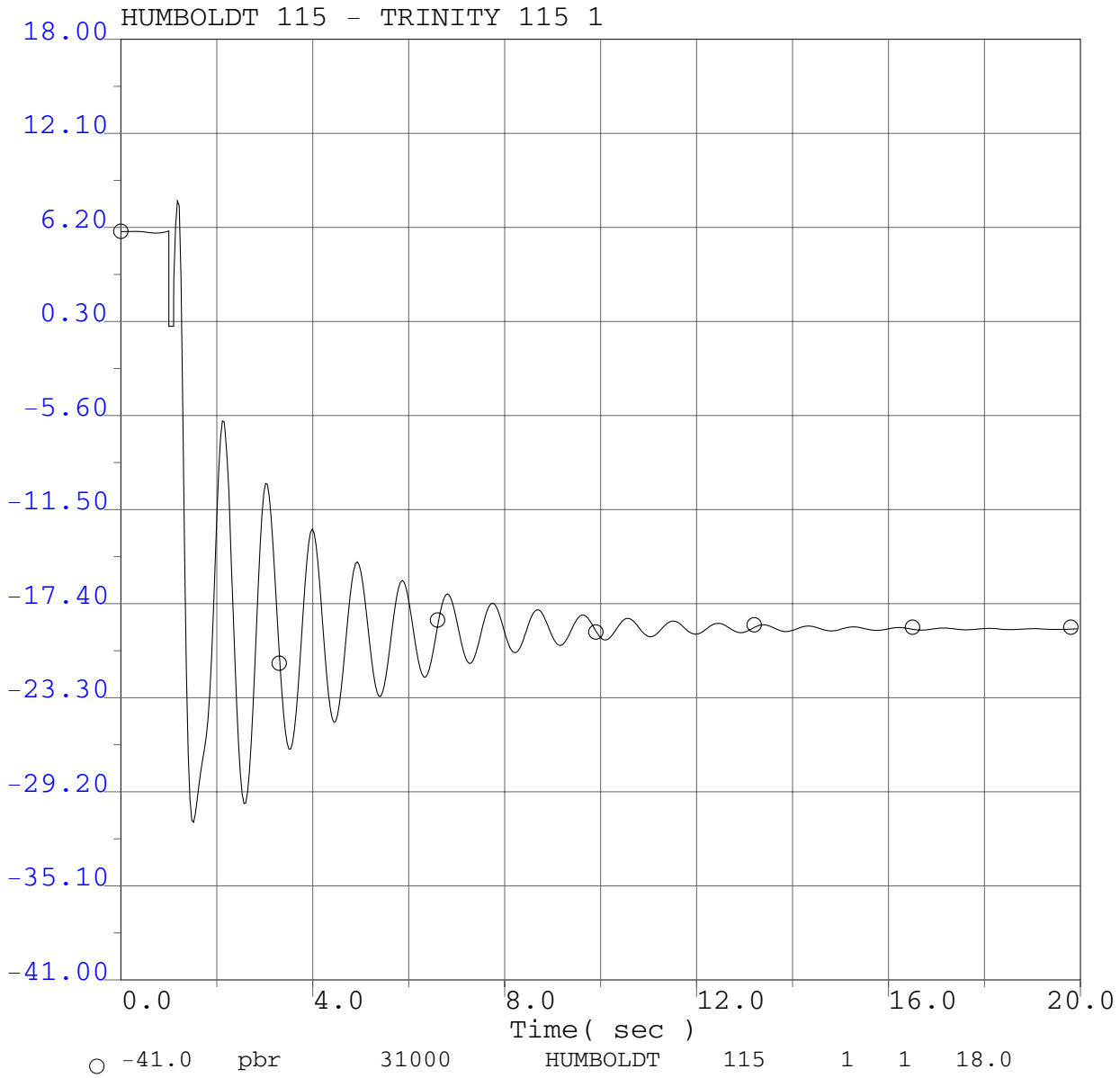

P0411 Project System Impact Study
2008 Winter Peak Base Case
P0411 @ 166.4MW
Humboldt Bay PP - Bumboldt #1 115kV line outage
3 phase 6 cycle fault at Humboldt Bay PP 115kV bus and clear HBay-Humb #1 115kV

P0411 Project System Impact Study

Selected PG&E Transmission Line Flows (MW)

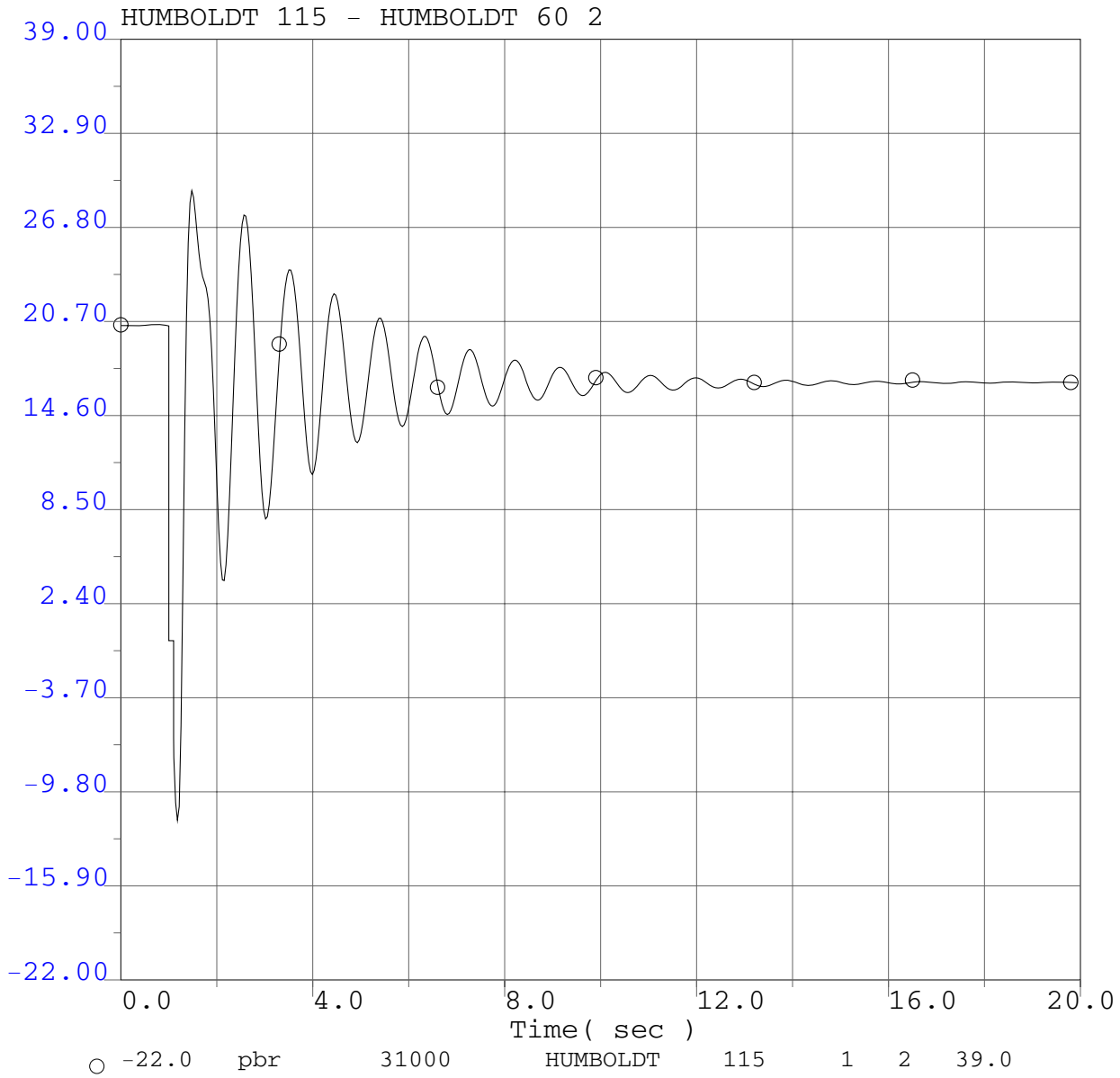

P0411 Project System Impact Study
2008 Winter Peak Base Case
P0411 @ 166.4MW
Humboldt Bay PP - Bumboldt #1 115kV line outage
3 phase 6 cycle fault at Humboldt Bay PP 115kV bus and clear HBay-Humb #1 115kV

P0411 Project System Impact Study

Selected PG&E Transmission Line Flows (MW)

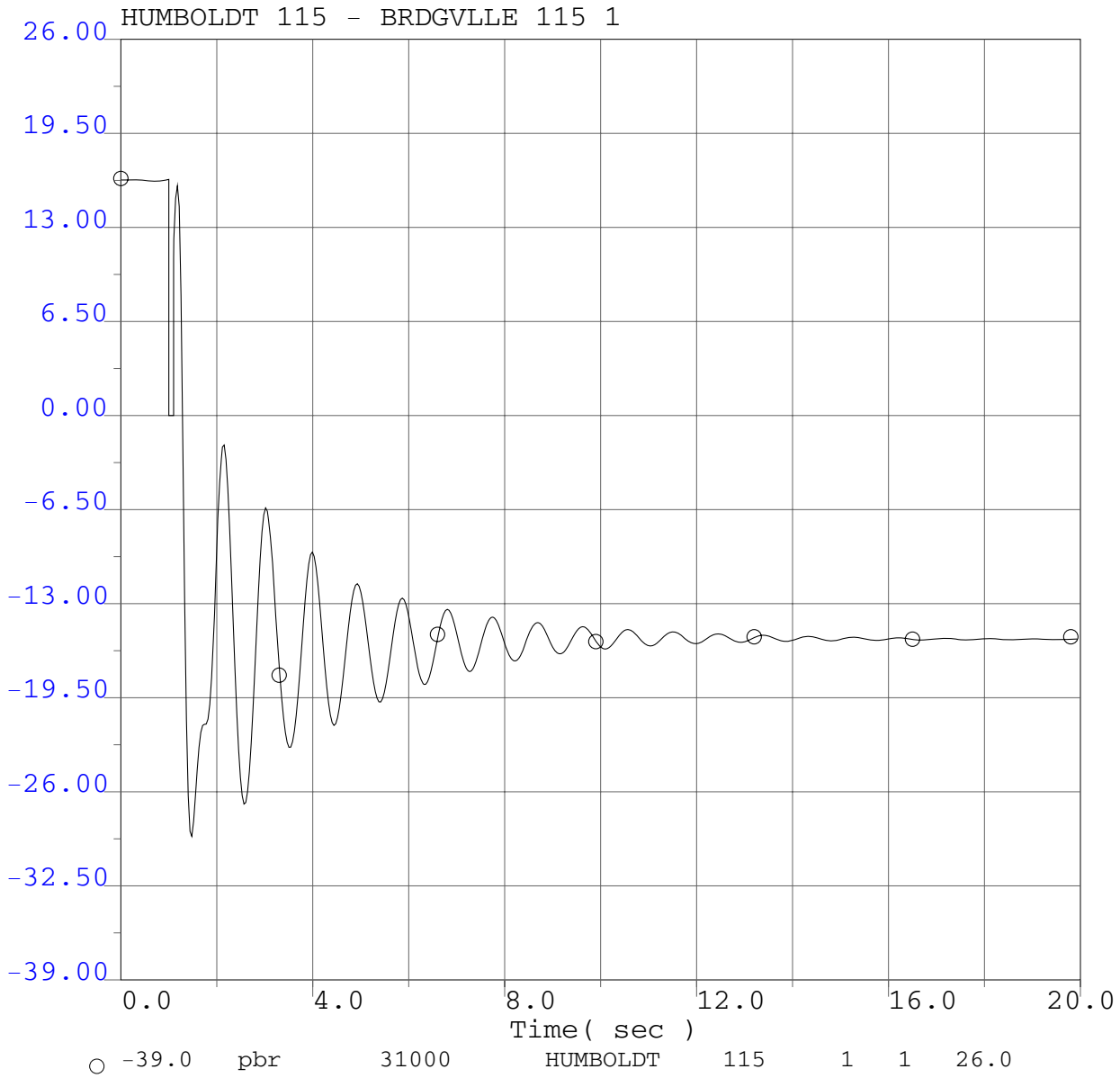

P0411 Project System Impact Study
2008 Winter Peak Base Case
P0411 @ 166.4MW
Humboldt Bay PP - Bumboldt #1 115kV line outage
3 phase 6 cycle fault at Humboldt Bay PP 115kV bus and clear HBay-Humb #1 115kV

P0411 Project System Impact Study

Selected PG&E Transmission Line Flows (MW)

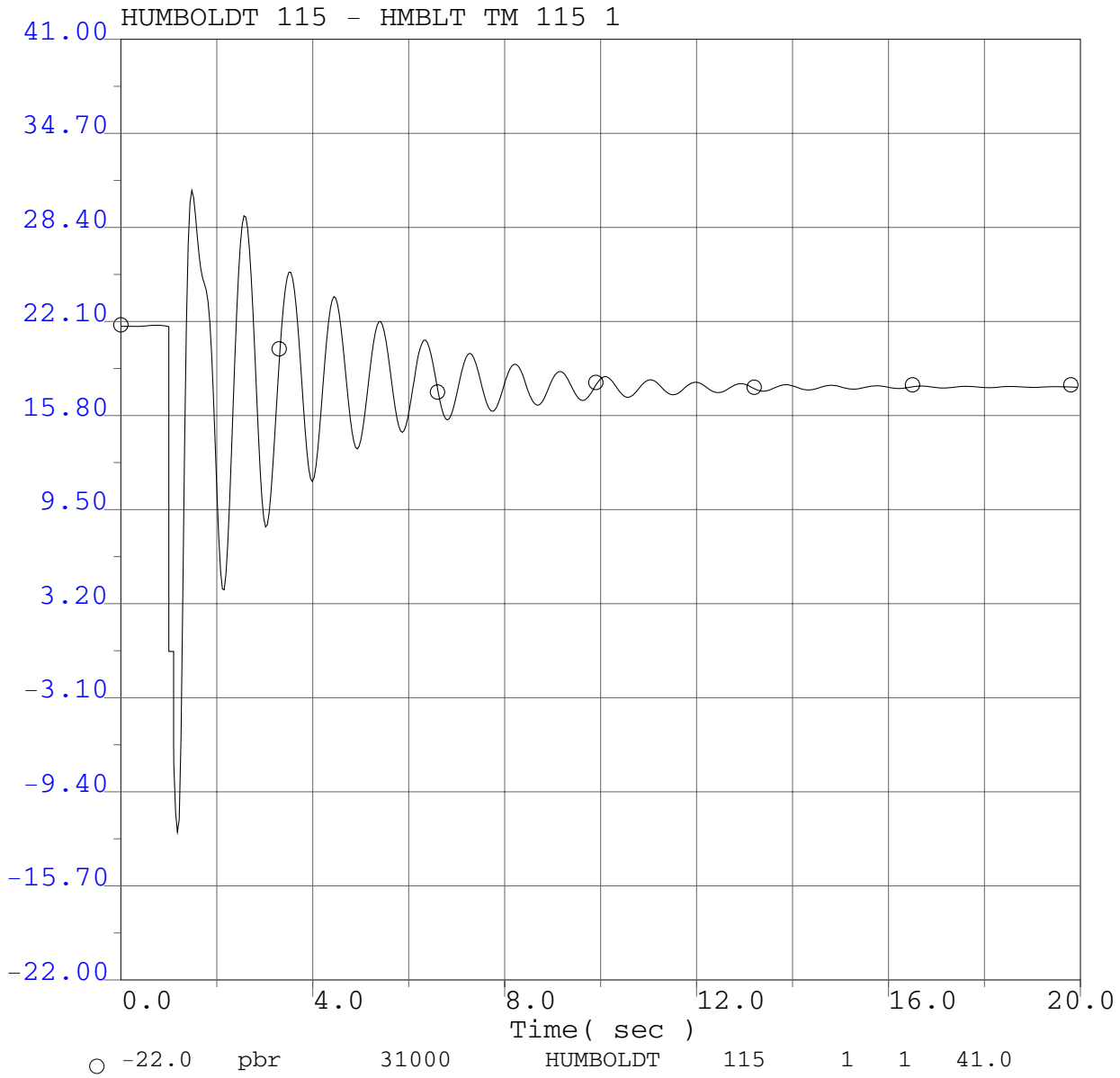

P0411 Project System Impact Study
2008 Winter Peak Base Case
P0411 @ 166.4MW
Humboldt Bay PP - Bumboldt #1 115kV line outage
3 phase 6 cycle fault at Humboldt Bay PP 115kV bus and clear HBay-Humb #1 115kV

P0411 Project System Impact Study

Selected PG&E Bus Voltage Plots Adjacent to Fault

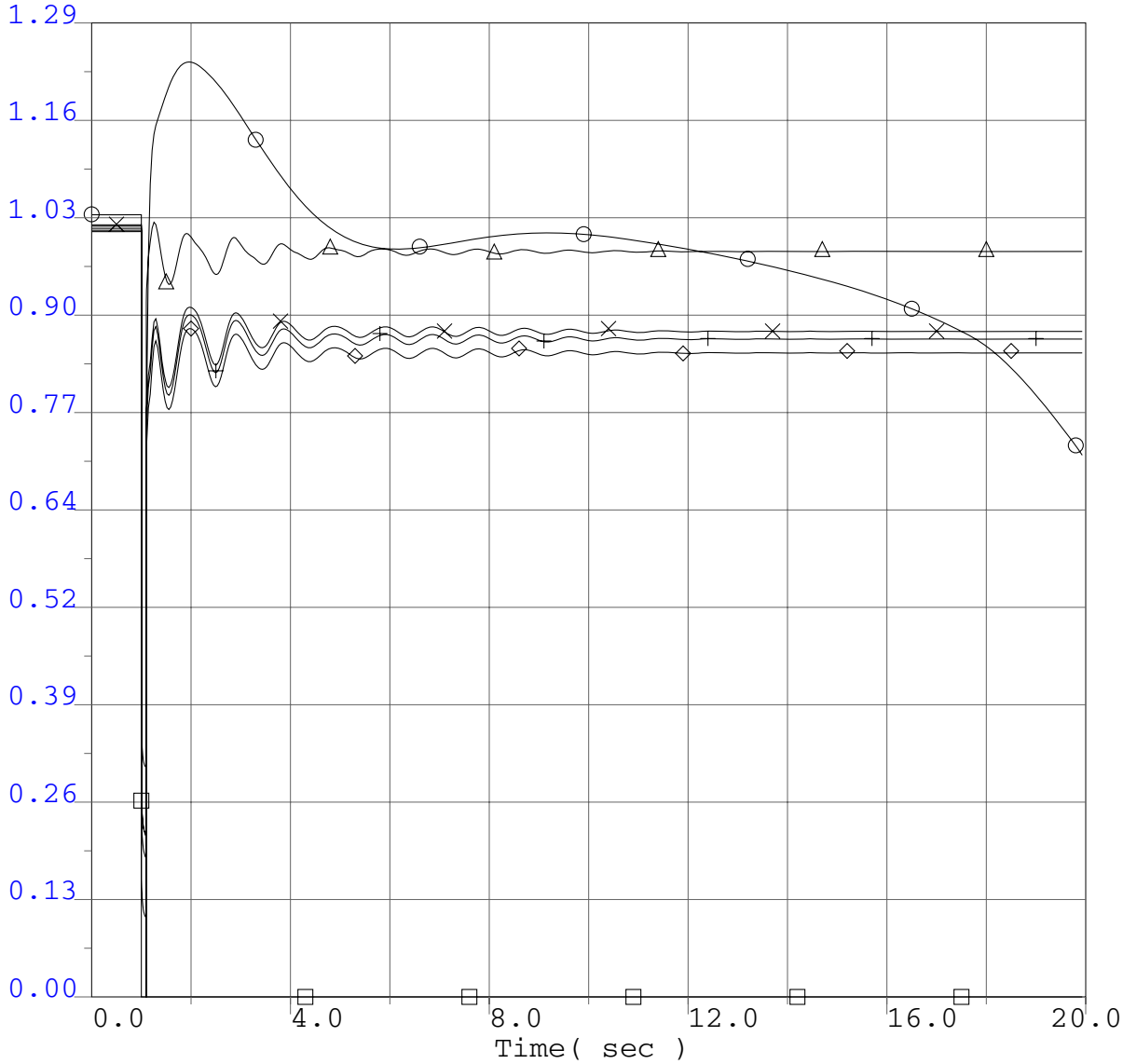

○	0.0	vbul	31090	HMBLT BY	60.0	"*"	1	1.29
×	0.0	vbus	31080	HUMBOLDT	60.0	"*"	1	1.29
□	0.0	vbul	31102	NEWBURG	60.0	"*"	1	1.29
△	0.0	vbus	31105	RIODLLTP	60.0	"*"	1	1.29
◇	0.0	vbul	31086	EUREKA	60.0	"*"	1	1.29
+	0.0	vbul	31082	HARRIS	60.0	"*"	1	1.29

P0411 Project System Impact Study
2008 Winter Peak Base Case
P0411 @ 166.4MW
Humboldt Bay PP Bus outage
3 ph 6 cyc flt @ Humboldt Bay PP 60kV bus & clr HBay 60kV bus

P0411 Project System Impact Study

Selected PG&E Bus Frequency Plots Adjacent to Fault

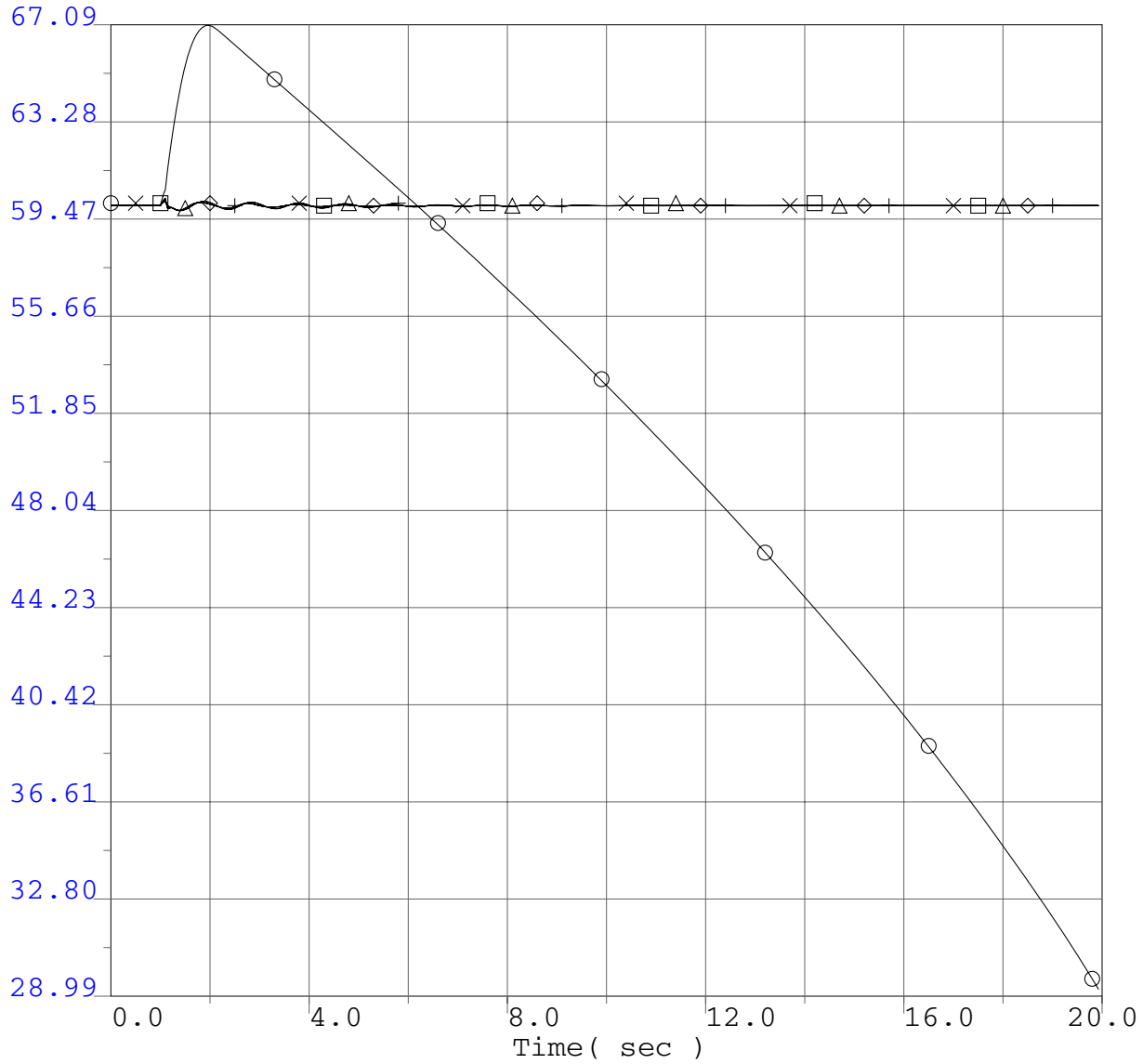

○	28.99	fbul	31090	HMBLT BY	60.0	"*" 1	67.09
×	28.99	fbus	31080	HUMBOLDT	60.0	"*" 1	67.09
□	28.99	fbul	31102	NEWBURG	60.0	"*" 1	67.09
△	28.99	fbus	31105	RIODLLTP	60.0	"*" 1	67.09
◇	28.99	fbul	31086	EUREKA	60.0	"*" 1	67.09
+	28.99	fbul	31082	HARRIS	60.0	"*" 1	67.09

P0411 Project System Impact Study
2008 Winter Peak Base Case
P0411 @ 166.4MW
Humboldt Bay PP Bus outage
3 ph 6 cyc flt @ Humboldt Bay PP 60kV bus & clr HBay 60kV bus

P0411 Project System Impact Study

Project Generator Terminal Voltages

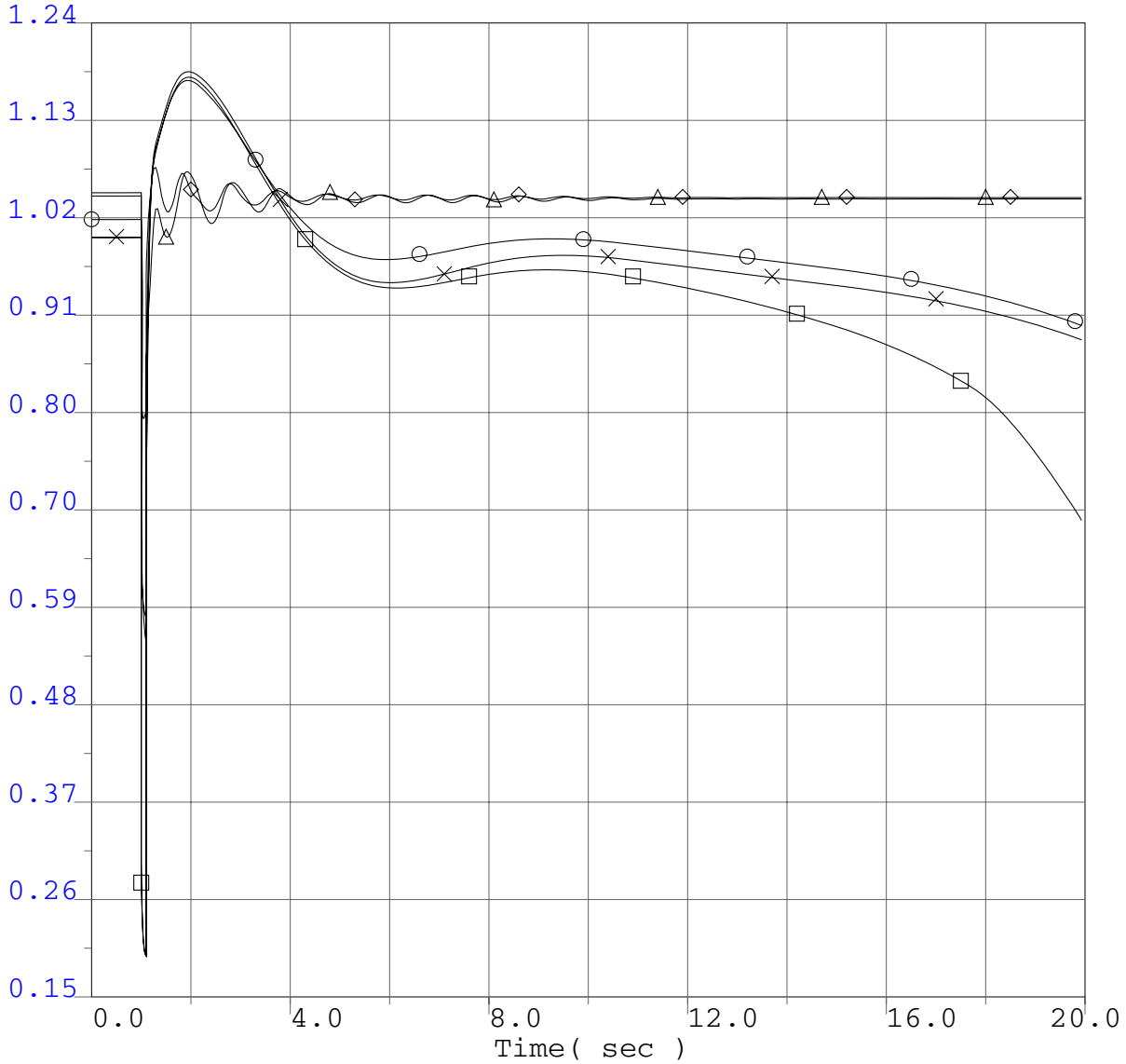

○ 0.15	vt	31180	P0411G1	13.8	"1"	1	1.24
× 0.15	vt	31181	P0411G2	13.8	"5"	1	1.24
□ 0.15	vt	31182	P0411G3	13.8	"8"	1	1.24
△ 0.15	vt	31150	FAIRHAVN	13.8	"1"	1	1.24
◇ 0.15	vt	31158	LP SAMOA	12.5	"1"	1	1.24

P0411 Project System Impact Study
2008 Winter Peak Base Case
P0411 @ 166.4MW
Humboldt Bay PP Bus outage
3 ph 6 cyc flt @ Humboldt Bay PP 60kV bus & clr HBay 60kV bus

P0411 Project System Impact Study

Project Generator Rotor Speed

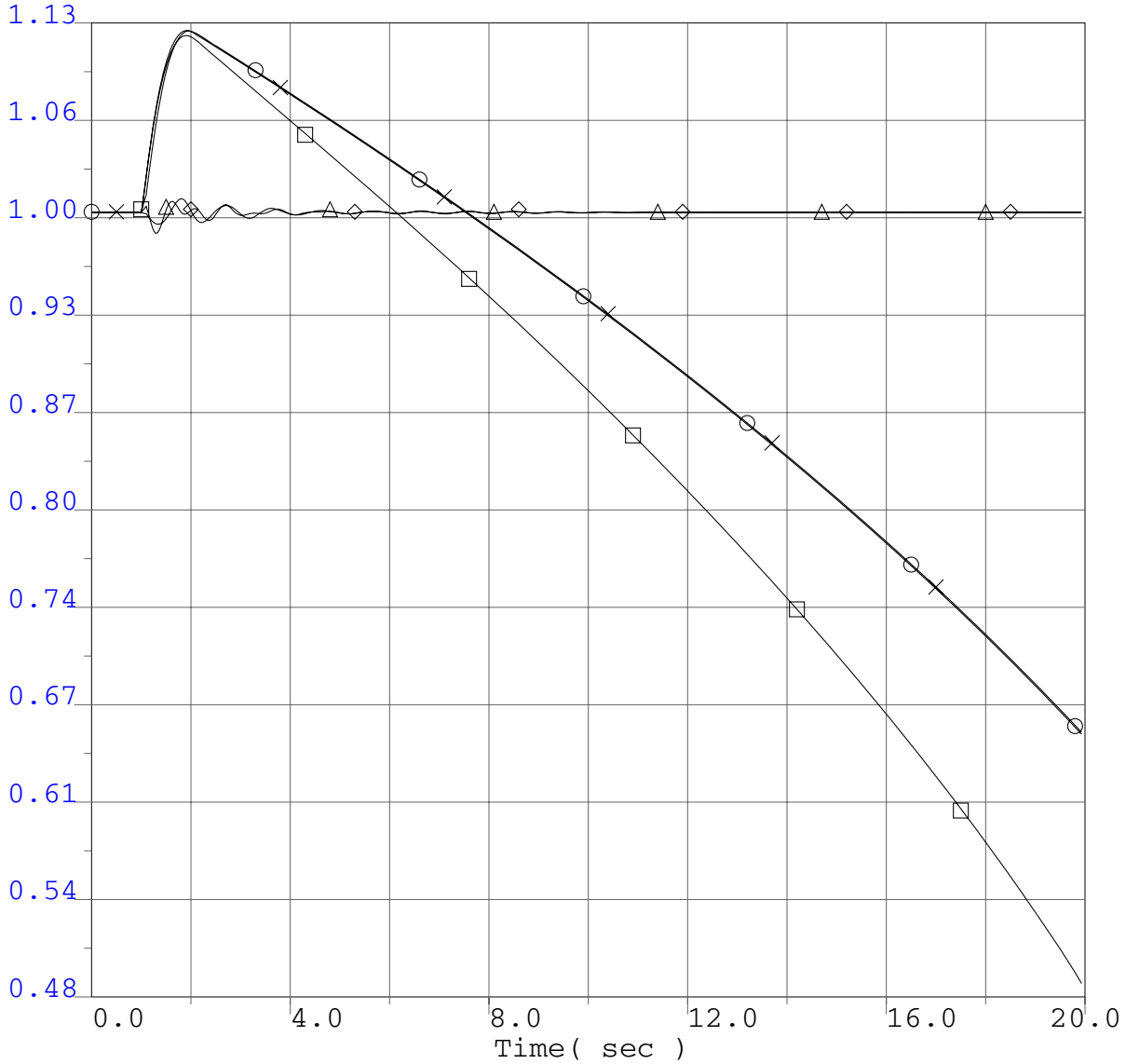

○	0.4759	spd	31180	P0411G1	13.8	"1" 1	1.1264
×	0.4759	spd	31181	P0411G2	13.8	"5" 1	1.1264
□	0.4759	spd	31182	P0411G3	13.8	"8" 1	1.1264
△	0.4759	spd	31150	FAIRHAVN	13.8	"1" 1	1.1264
◇	0.4759	spd	31158	LP SAMOA	12.5	"1" 1	1.1264

P0411 Project System Impact Study
2008 Winter Peak Base Case
P0411 @ 166.4MW
Humboldt Bay PP Bus outage
3 ph 6 cyc flt @ Humboldt Bay PP 60kV bus & clr HBay 60kV bus

P0411 Project System Impact Study

Project Generator Terminal Power

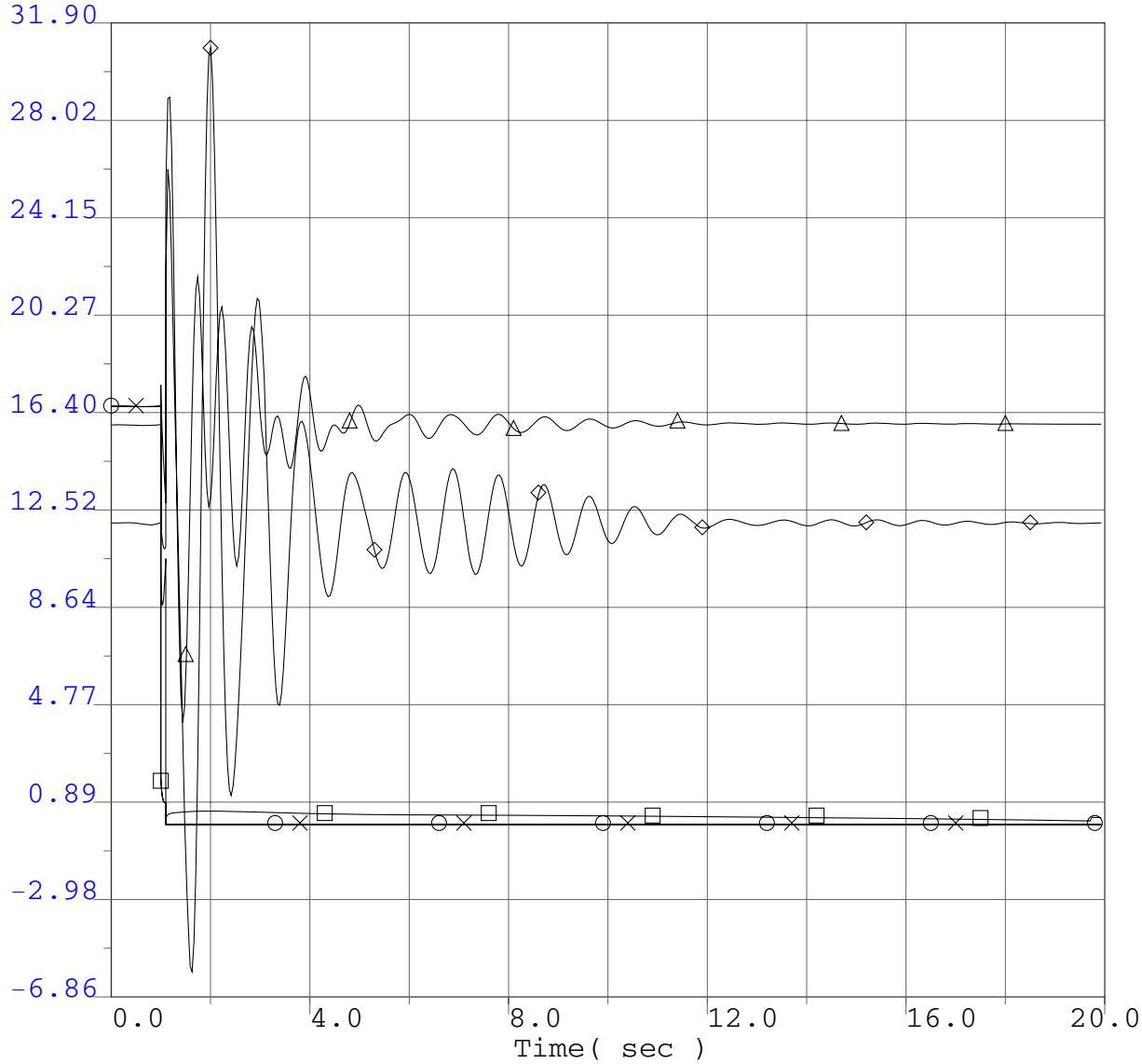

○	-6.86	pg	31180	P0411G1	13.8	"1"	1	31.9
×	-6.86	pg	31181	P0411G2	13.8	"5"	1	31.9
□	-6.86	pg	31182	P0411G3	13.8	"8"	1	31.9
△	-6.86	pg	31150	FAIRHAVN	13.8	"1"	1	31.9
◇	-6.86	pg	31158	LP SAMOA	12.5	"1"	1	31.9

P0411 Project System Impact Study
2008 Winter Peak Base Case
P0411 @ 166.4MW
Humboldt Bay PP Bus outage
3 ph 6 cyc flt @ Humboldt Bay PP 60kV bus & clr HBay 60kV bus

P0411 Project System Impact Study

Project Generator Terminal Reactive Power

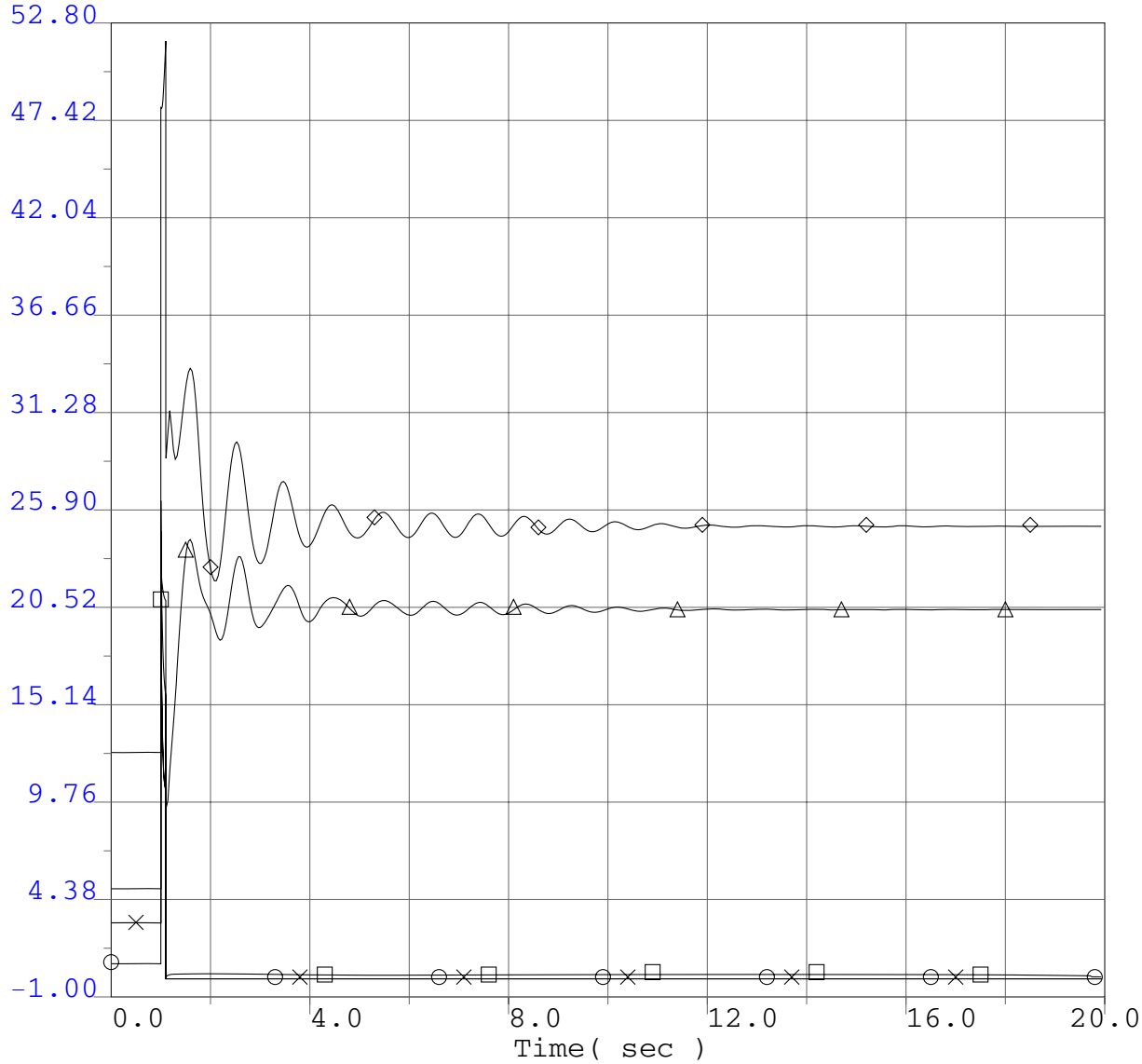

○	-1.0	qg	31180	P0411G1	13.8	"1" 1	52.8
×	-1.0	qg	31181	P0411G2	13.8	"5" 1	52.8
□	-1.0	qg	31182	P0411G3	13.8	"8" 1	52.8
△	-1.0	qg	31150	FAIRHAVN	13.8	"1" 1	52.8
◇	-1.0	qg	31158	LP SAMOA	12.5	"1" 1	52.8

P0411 Project System Impact Study
2008 Winter Peak Base Case
P0411 @ 166.4MW
Humboldt Bay PP Bus outage
3 ph 6 cyc flt @ Humboldt Bay PP 60kV bus & clr HBay 60kV bus

P0411 Project System Impact Study

Selected WECC Bus Voltage Plots

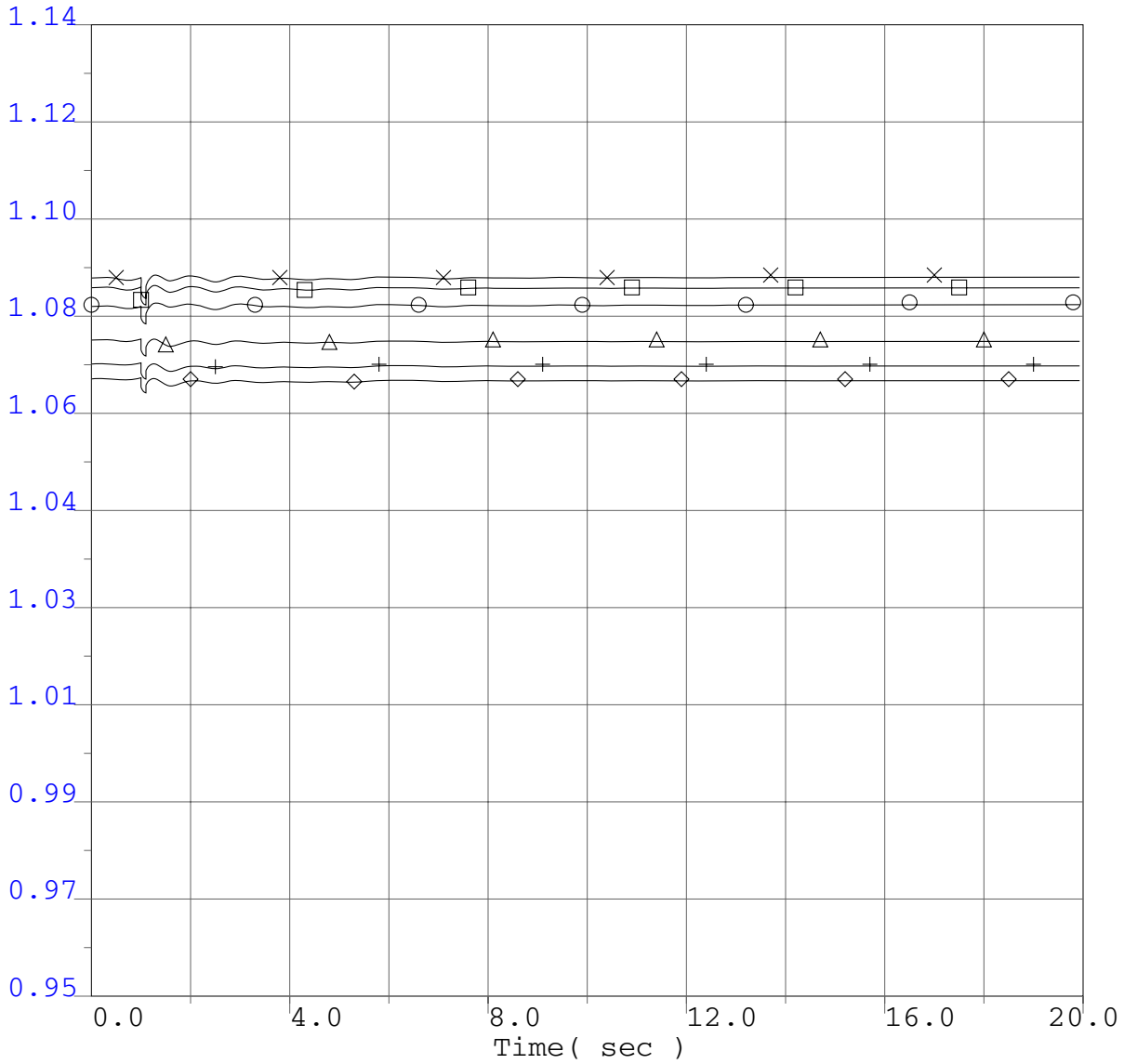

○	0.95	vbus	40687	MALIN	500.0	"*" 1	1.14
×	0.95	vbus	30005	ROUND MT	500.0	"*" 1	1.14
□	0.95	vbus	30015	TABLE MT	500.0	"*" 1	1.14
△	0.95	vbus	30030	VACA-DIX	500.0	"*" 1	1.14
◇	0.95	vbus	30040	TESLA	500.0	"*" 1	1.14
+	0.95	vbus	30035	TRACY	500.0	"*" 1	1.14

P0411 Project System Impact Study
2008 Winter Peak Base Case
P0411 @ 166.4MW
Humboldt Bay PP Bus outage
3 ph 6 cyc flt @ Humboldt Bay PP 60kV bus & clr HBay 60kV bus

P0411 Project System Impact Study

Selected WECC Bus Voltage Plots

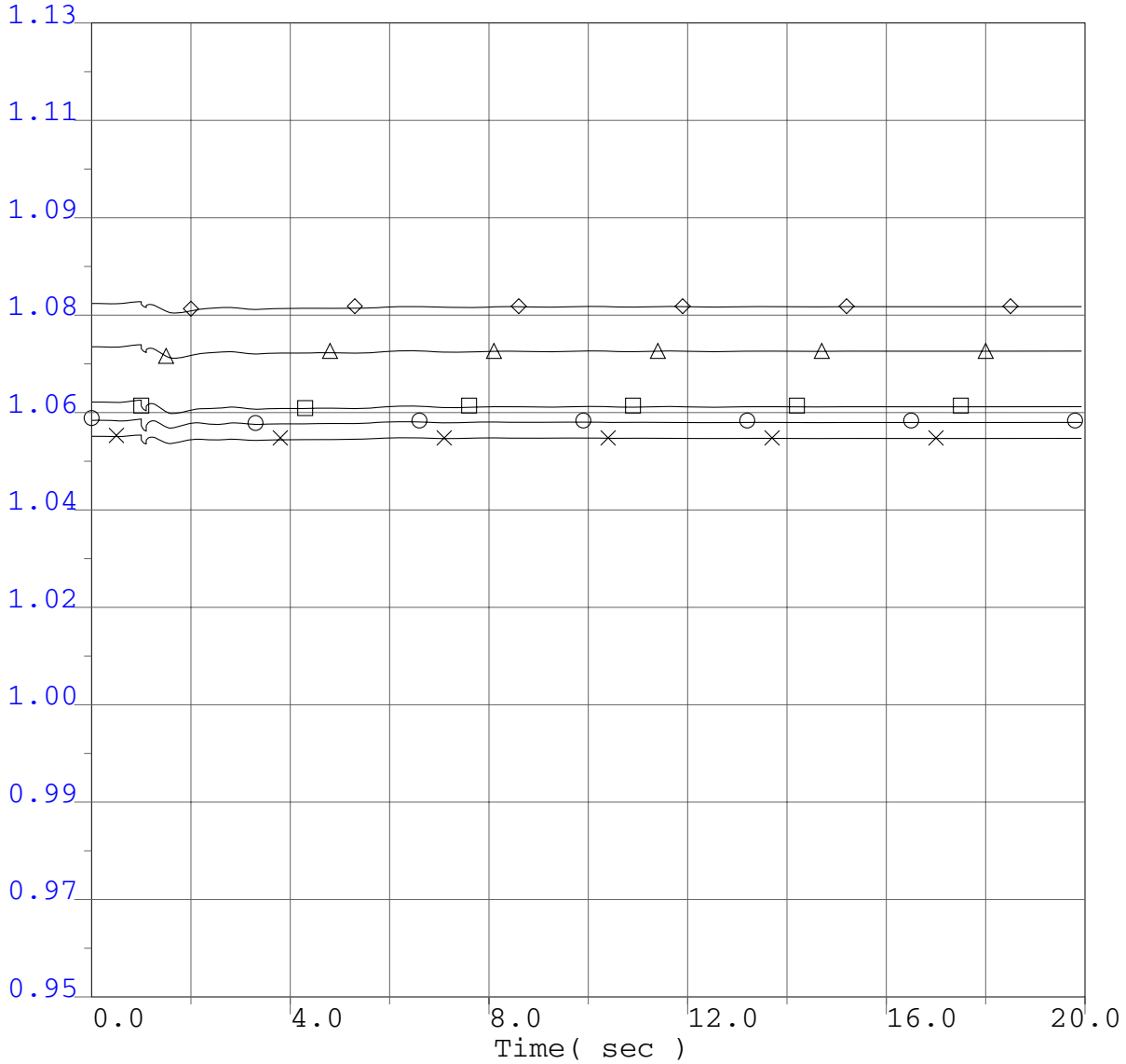

○	0.95	vbus	30042	METCALF	500.0	"*"	1	1.13
×	0.95	vbus	30045	MOSSLAND	500.0	"*"	1	1.13
□	0.95	vbus	30050	LOSBANOS	500.0	"*"	1	1.13
△	0.95	vbus	30055	GATES	500.0	"*"	1	1.13
◇	0.95	vbus	30060	MIDWAY	500.0	"*"	1	1.13

P0411 Project System Impact Study
2008 Winter Peak Base Case
P0411 @ 166.4MW
Humboldt Bay PP Bus outage
3 ph 6 cyc flt @ Humboldt Bay PP 60kV bus & clr HBay 60kV bus

P0411 Project System Impact Study

Selected WECC Bus Voltage Plots

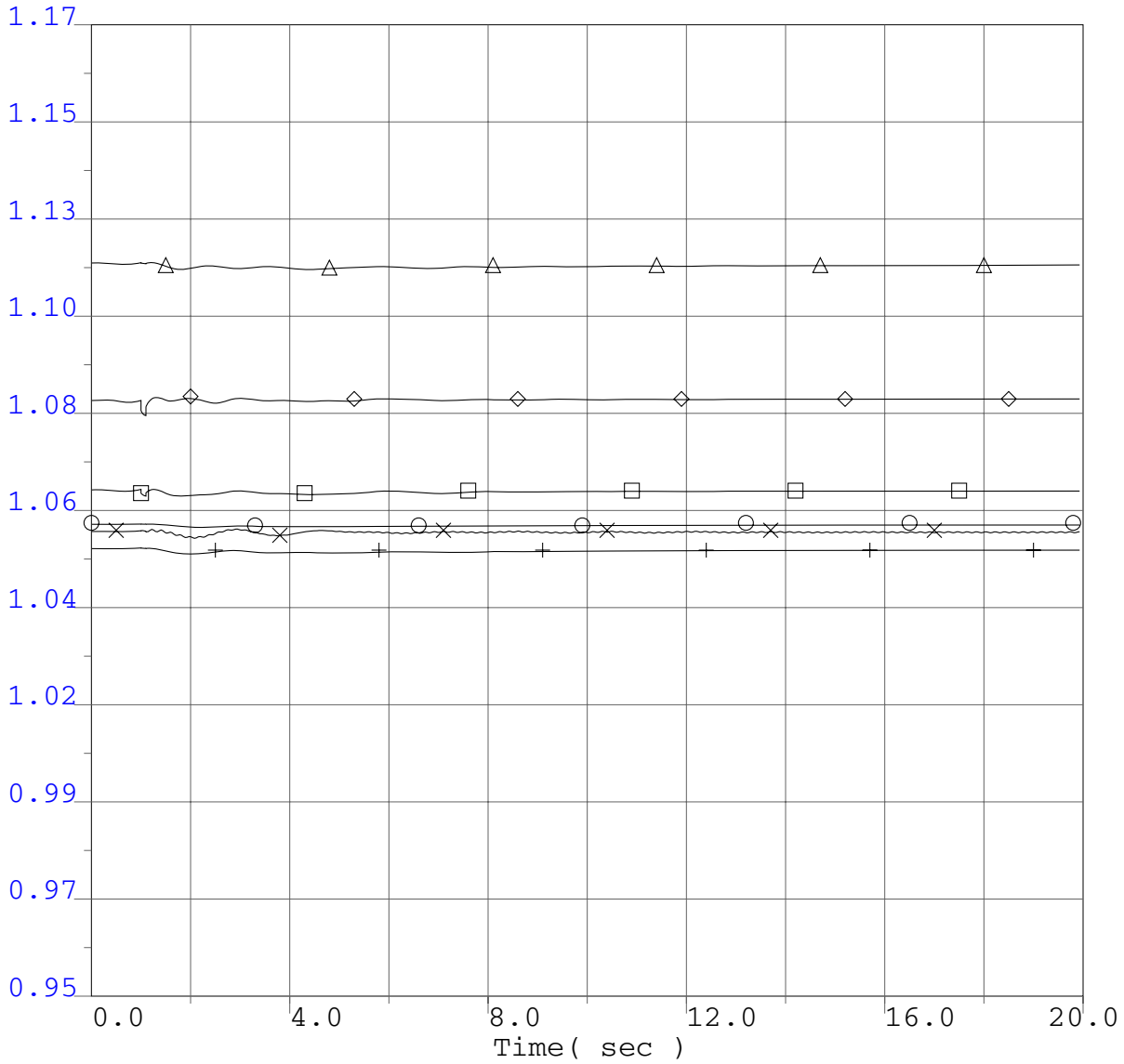

○	0.95	vbus	14001	FOURCORN	500.0	"*" 1	1.17
×	0.95	vbus	50703	NIC500	500.0	"*" 1	1.17
□	0.95	vbus	60240	MIDPOINT	500.0	"*" 1	1.17
△	0.95	vbus	62012	TOWN2	500.0	"*" 1	1.17
◇	0.95	vbus	40687	MALIN	500.0	"*" 1	1.17
+	0.95	vbus	66340	SIGURD	345.0	"*" 1	1.17

P0411 Project System Impact Study
2008 Winter Peak Base Case
P0411 @ 166.4MW
Humboldt Bay PP Bus outage
3 ph 6 cyc flt @ Humboldt Bay PP 60kV bus & clr HBay 60kV bus

P0411 Project System Impact Study

Selected WECC Bus Voltage Plots

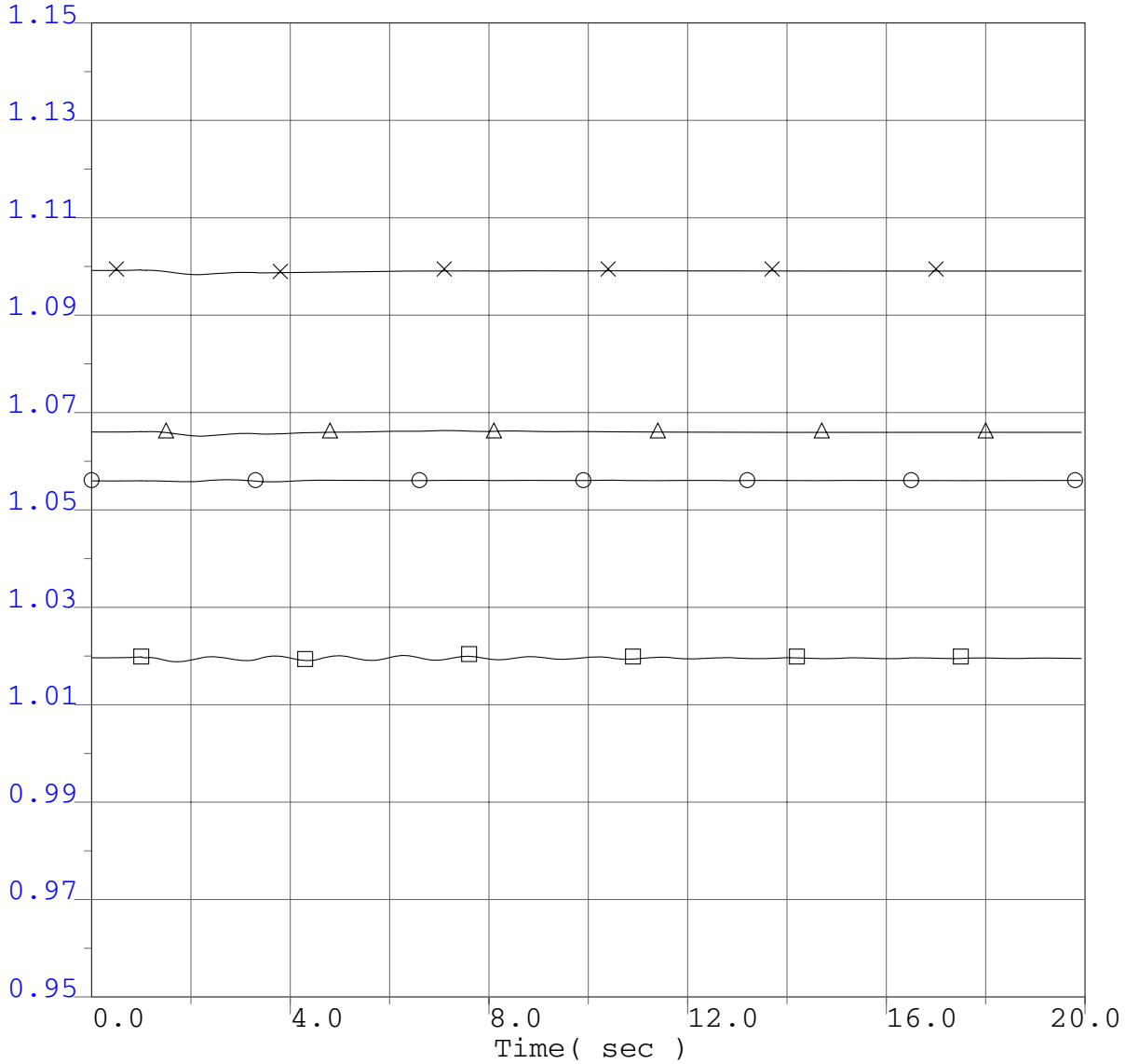

○ 0.95	vbus	54150	LANGDON2	500.0	"*"	1	1.15
× 0.95	vbus	14003	NAVAJO	500.0	"*"	1	1.15
□ 0.95	vbus	24153	VESTAL	230.0	"*"	1	1.15
△ 0.95	vbus	22360	IMPRLVLY	500.0	"*"	1	1.15

P0411 Project System Impact Study
2008 Winter Peak Base Case
P0411 @ 166.4MW
Humboldt Bay PP Bus outage
3 ph 6 cyc flt @ Humboldt Bay PP 60kV bus & clr HBay 60kV bus

P0411 Project System Impact Study

Selected WECC Bus Frequency Plots

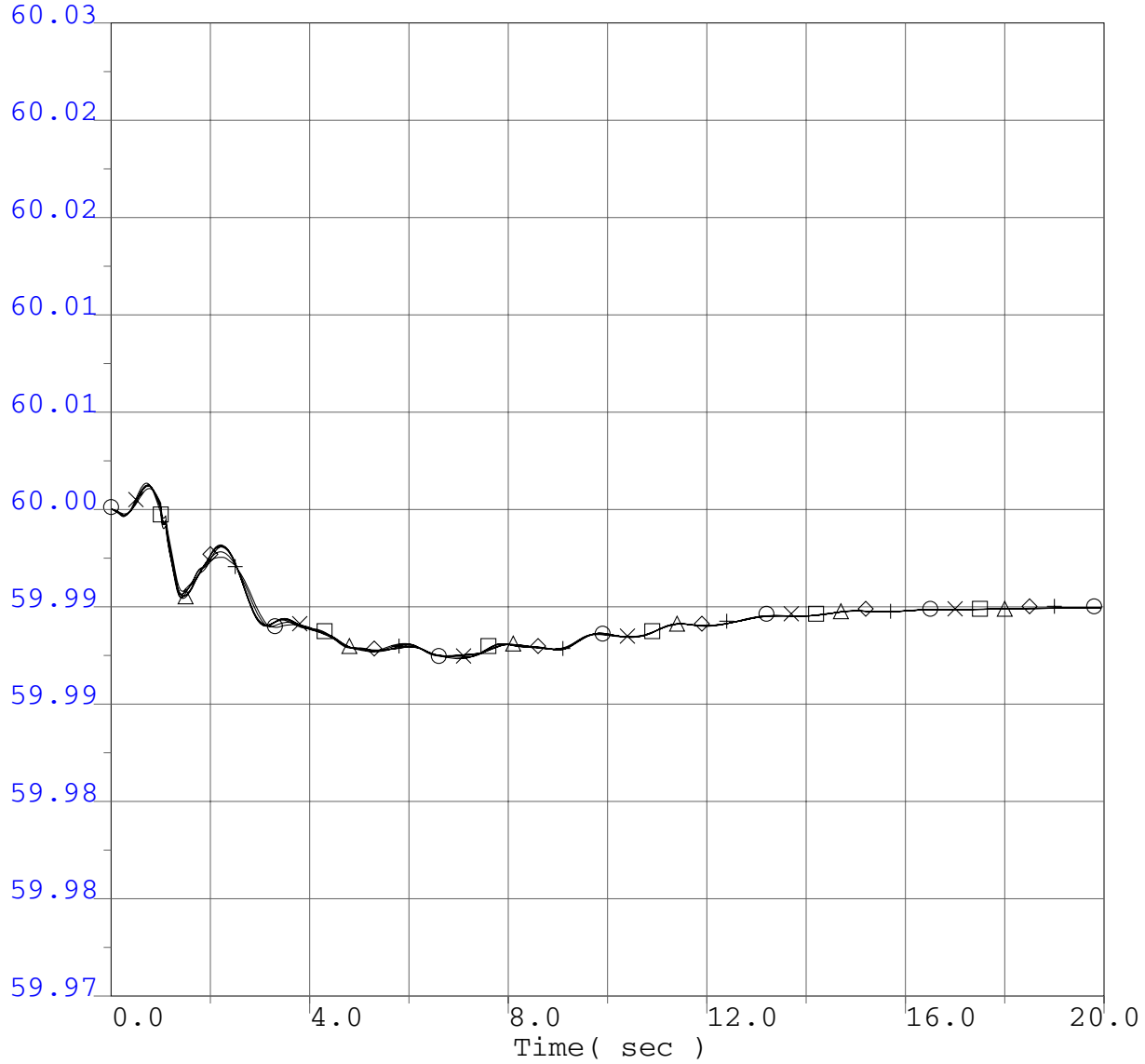

○	59.97	fbus	40687	MALIN	500.0	"*" 1	60.03
×	59.97	fbus	30005	ROUND MT	500.0	"*" 1	60.03
□	59.97	fbus	30015	TABLE MT	500.0	"*" 1	60.03
△	59.97	fbus	30030	VACA-DIX	500.0	"*" 1	60.03
◇	59.97	fbus	30040	TESLA	500.0	"*" 1	60.03
+	59.97	fbus	30035	TRACY	500.0	"*" 1	60.03

P0411 Project System Impact Study
2008 Winter Peak Base Case
P0411 @ 166.4MW
Humboldt Bay PP Bus outage
3 ph 6 cyc flt @ Humboldt Bay PP 60kV bus & clr HBay 60kV bus

P0411 Project System Impact Study

Selected WECC Bus Frequency Plots

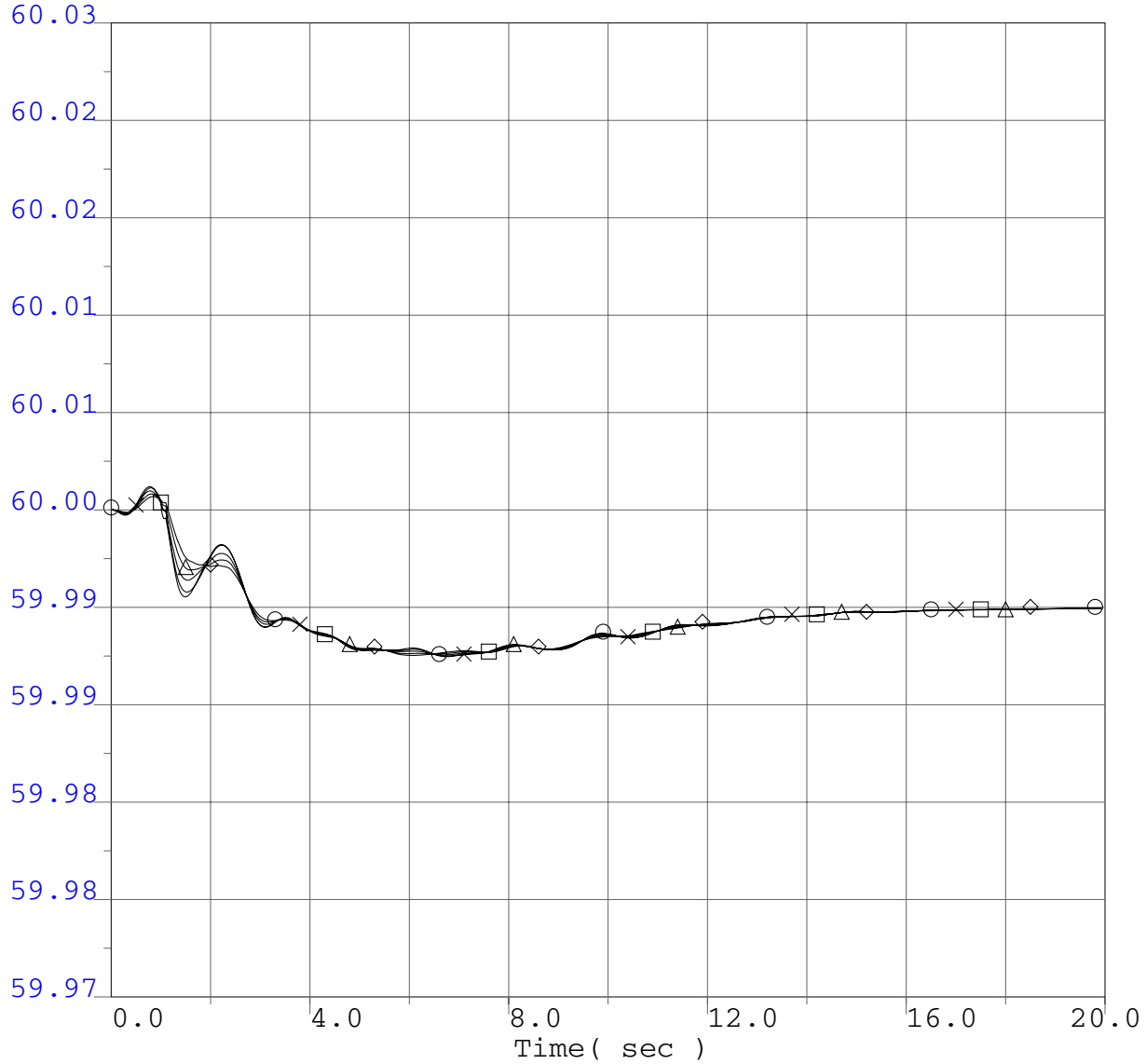

○ 59.97	fbus	30042	METCALF	500.0	"*"	1	60.03
× 59.97	fbus	30045	MOSSLAND	500.0	"*"	1	60.03
□ 59.97	fbus	30050	LOSBANOS	500.0	"*"	1	60.03
△ 59.97	fbus	30055	GATES	500.0	"*"	1	60.03
◇ 59.97	fbus	30060	MIDWAY	500.0	"*"	1	60.03

P0411 Project System Impact Study
2008 Winter Peak Base Case
P0411 @ 166.4MW
Humboldt Bay PP Bus outage
3 ph 6 cyc flt @ Humboldt Bay PP 60kV bus & clr HBay 60kV bus

P0411 Project System Impact Study

Selected WECC Bus Frequency Plots

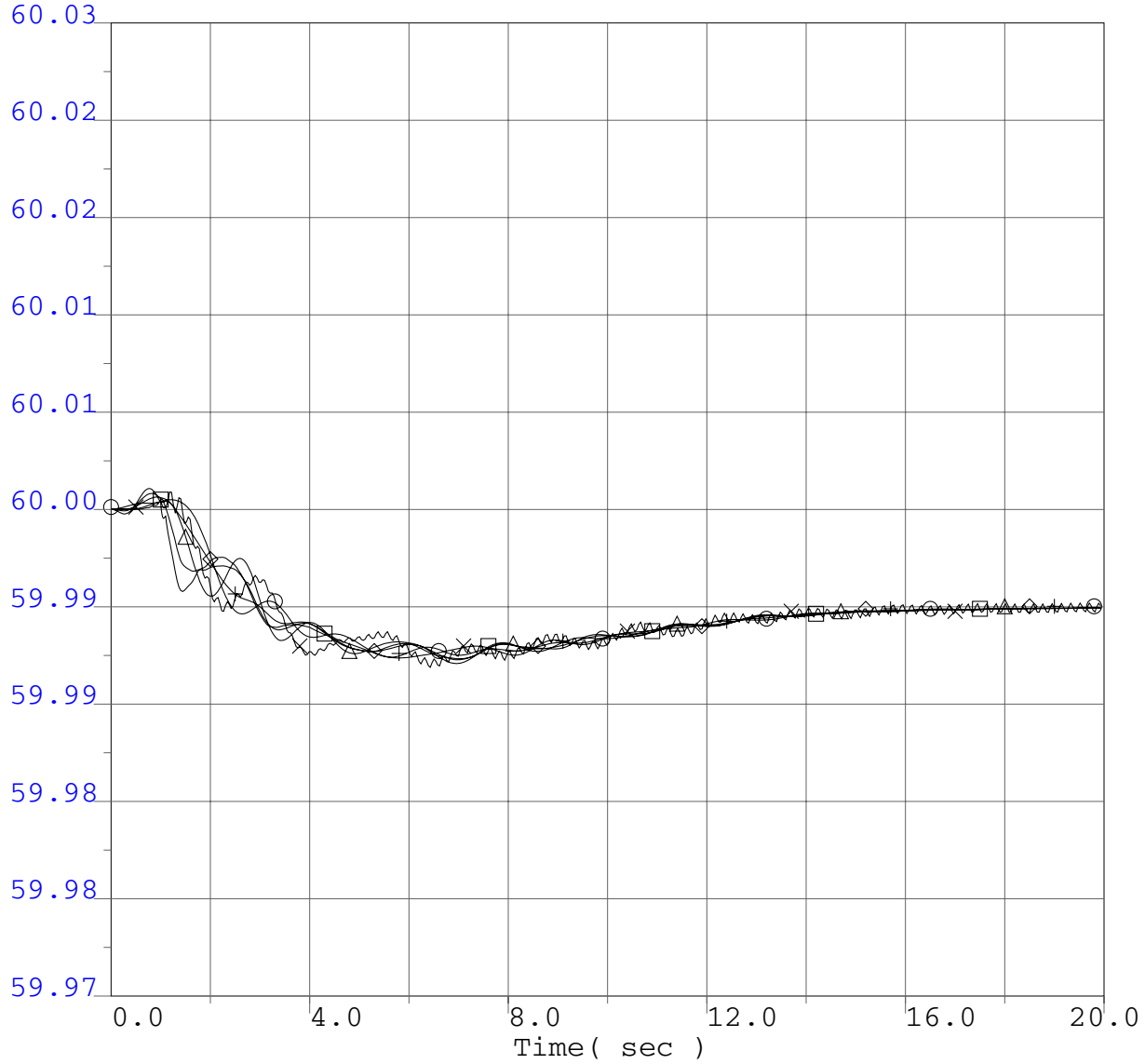

○ 59.97	fbus	14001	FOURCORN	500.0	"*"	1	60.03
× 59.97	fbus	50703	NIC500	500.0	"*"	1	60.03
□ 59.97	fbus	60240	MIDPOINT	500.0	"*"	1	60.03
△ 59.97	fbus	62012	TOWN2	500.0	"*"	1	60.03
◇ 59.97	fbus	40687	MALIN	500.0	"*"	1	60.03
+ 59.97	fbus	66340	SIGURD	345.0	"*"	1	60.03

P0411 Project System Impact Study
2008 Winter Peak Base Case
P0411 @ 166.4MW
Humboldt Bay PP Bus outage
3 ph 6 cyc flt @ Humboldt Bay PP 60kV bus & clr HBay 60kV bus

P0411 Project System Impact Study

Selected WECC Bus Frequency Plots

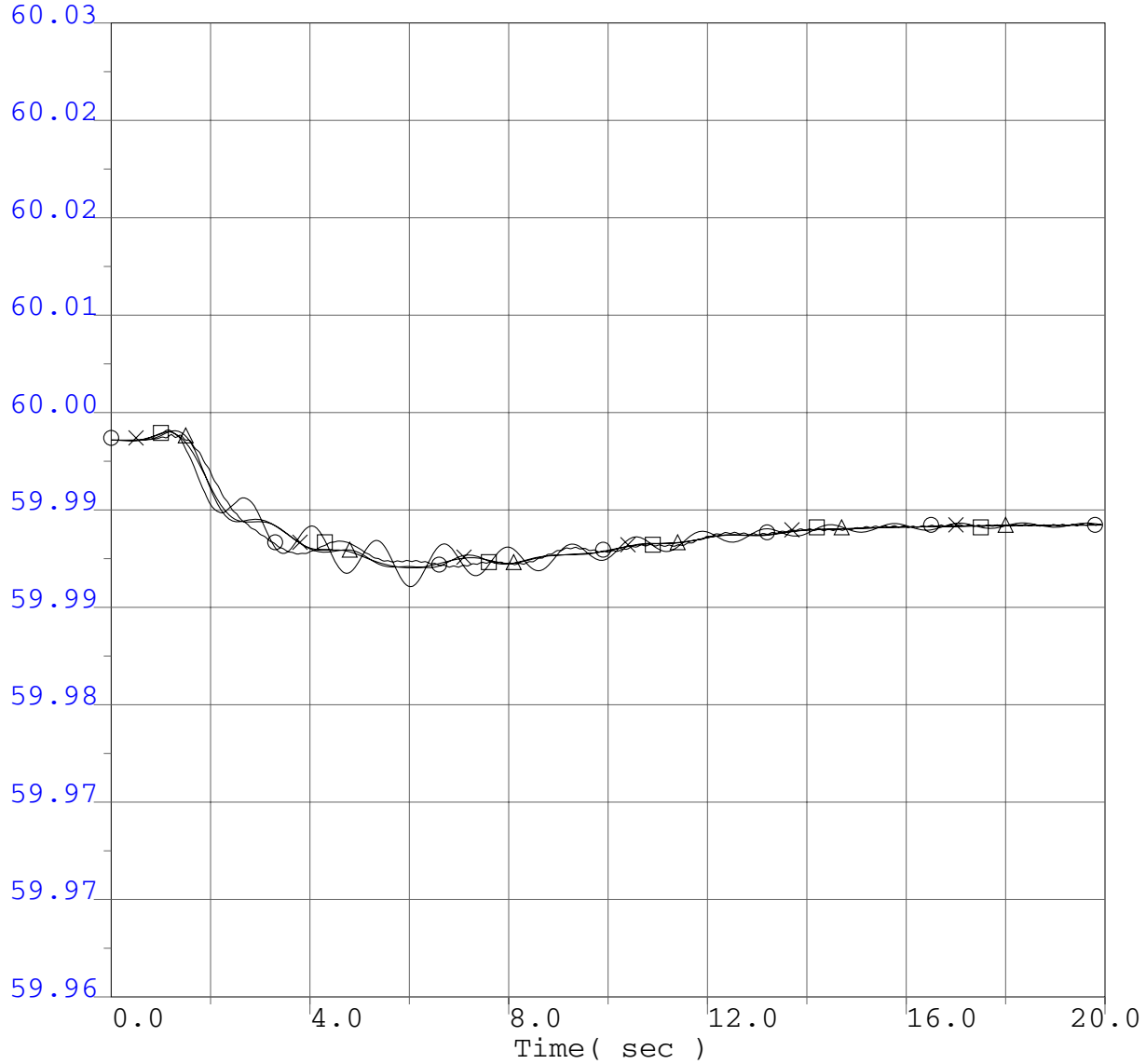

○ 59.96	fbus	54150	LANGDON2	500.0	"*"	1	60.03
× 59.96	fbus	14003	NAVAJO	500.0	"*"	1	60.03
□ 59.96	fbus	24153	VESTAL	230.0	"*"	1	60.03
△ 59.96	fbus	22360	IMPRLVLY	500.0	"*"	1	60.03

P0411 Project System Impact Study
2008 Winter Peak Base Case
P0411 @ 166.4MW
Humboldt Bay PP Bus outage
3 ph 6 cyc flt @ Humboldt Bay PP 60kV bus & clr HBay 60kV bus

P0411 Project System Impact Study

WECC Generator Rotor Angle

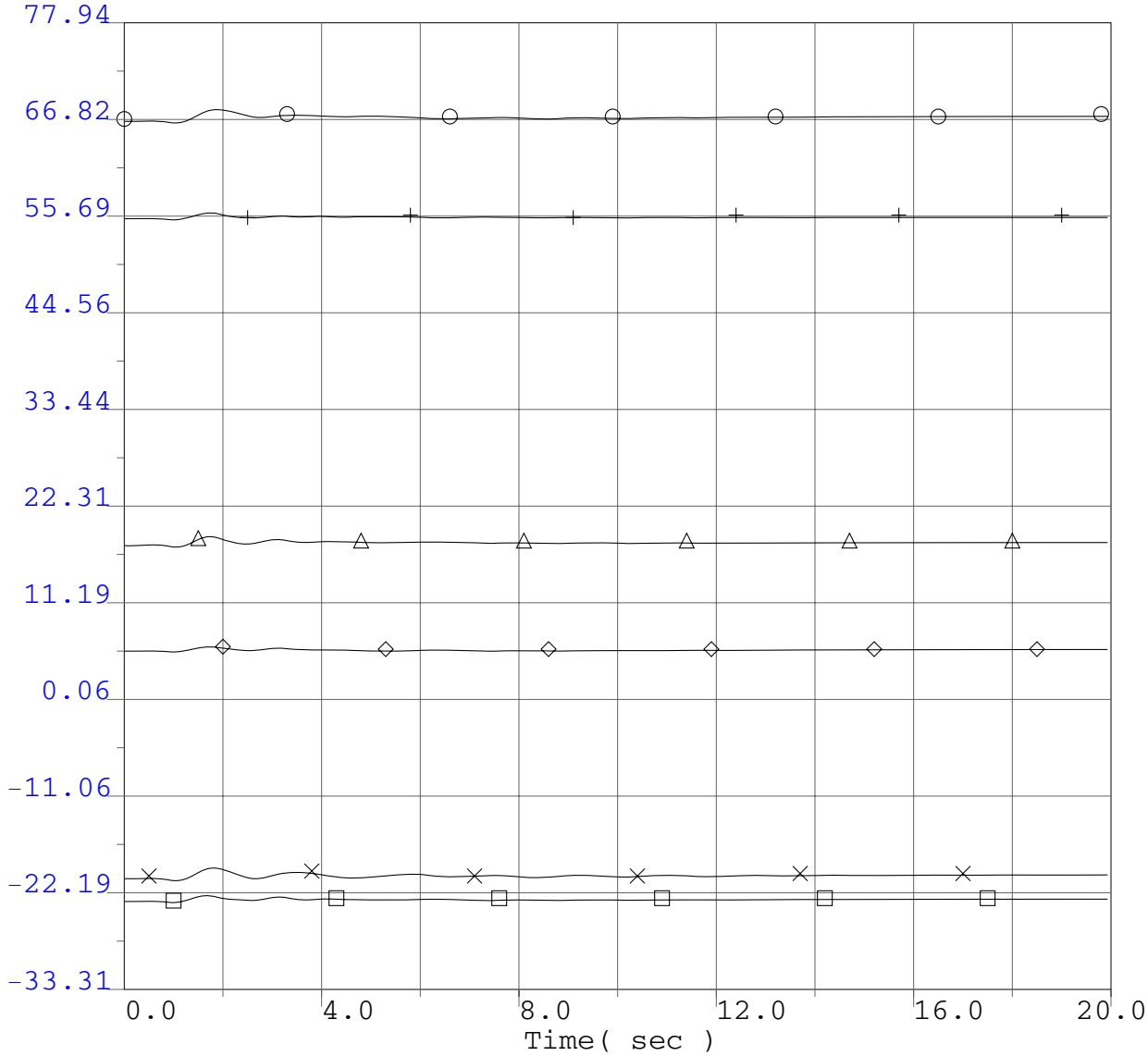

○	-33.31	ang	14914	FCNGN4CC	22.0	"H" 1	77.94
×	-33.31	ang	50500	GMS G6	13.8	"1" 1	77.94
□	-33.31	ang	60100	BRWNL 5	13.8	"1" 1	77.94
△	-33.31	ang	62048	COLSTP 3	26.0	"1" 1	77.94
◇	-33.31	ang	41701	JONDAY01	13.8	"1" 1	77.94
+	-33.31	ang	36411	DIABLO 1	25.0	"1" 1	77.94

P0411 Project System Impact Study
2008 Winter Peak Base Case
P0411 @ 166.4MW
Humboldt Bay PP Bus outage
3 ph 6 cyc flt @ Humboldt Bay PP 60kV bus & clr HBay 60kV bus

P0411 Project System Impact Study

WECC Generator Rotor Angle

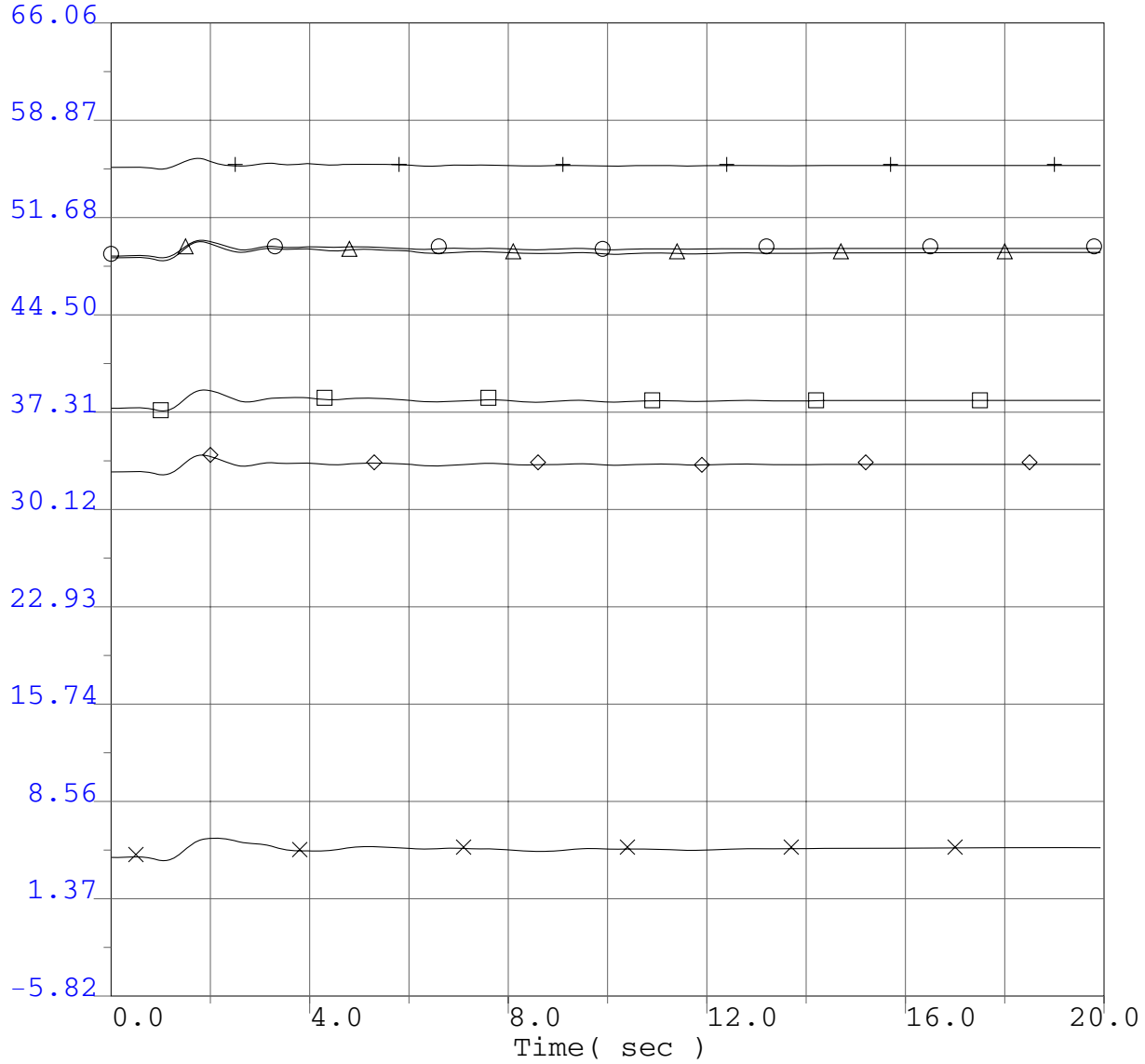

○	-5.82	ang	65490	EHUNTR 1	24.0	"1" 1	66.06
×	-5.82	ang	54280	SUND#2GN	18.0	"2" 1	66.06
□	-5.82	ang	79151	GLENC3-4	13.8	"3" 1	66.06
△	-5.82	ang	24130	S.ONOFR3	22.0	"3" 1	66.06
◇	-5.82	ang	22244	ENCINA 5	24.0	"1" 1	66.06
+	-5.82	ang	36411	DIABLO 1	25.0	"1" 1	66.06

P0411 Project System Impact Study
2008 Winter Peak Base Case
P0411 @ 166.4MW
Humboldt Bay PP Bus outage
3 ph 6 cyc flt @ Humboldt Bay PP 60kV bus & clr HBay 60kV bus

P0411 Project System Impact Study

Selected PG&E Transmission Line Flows (MW)

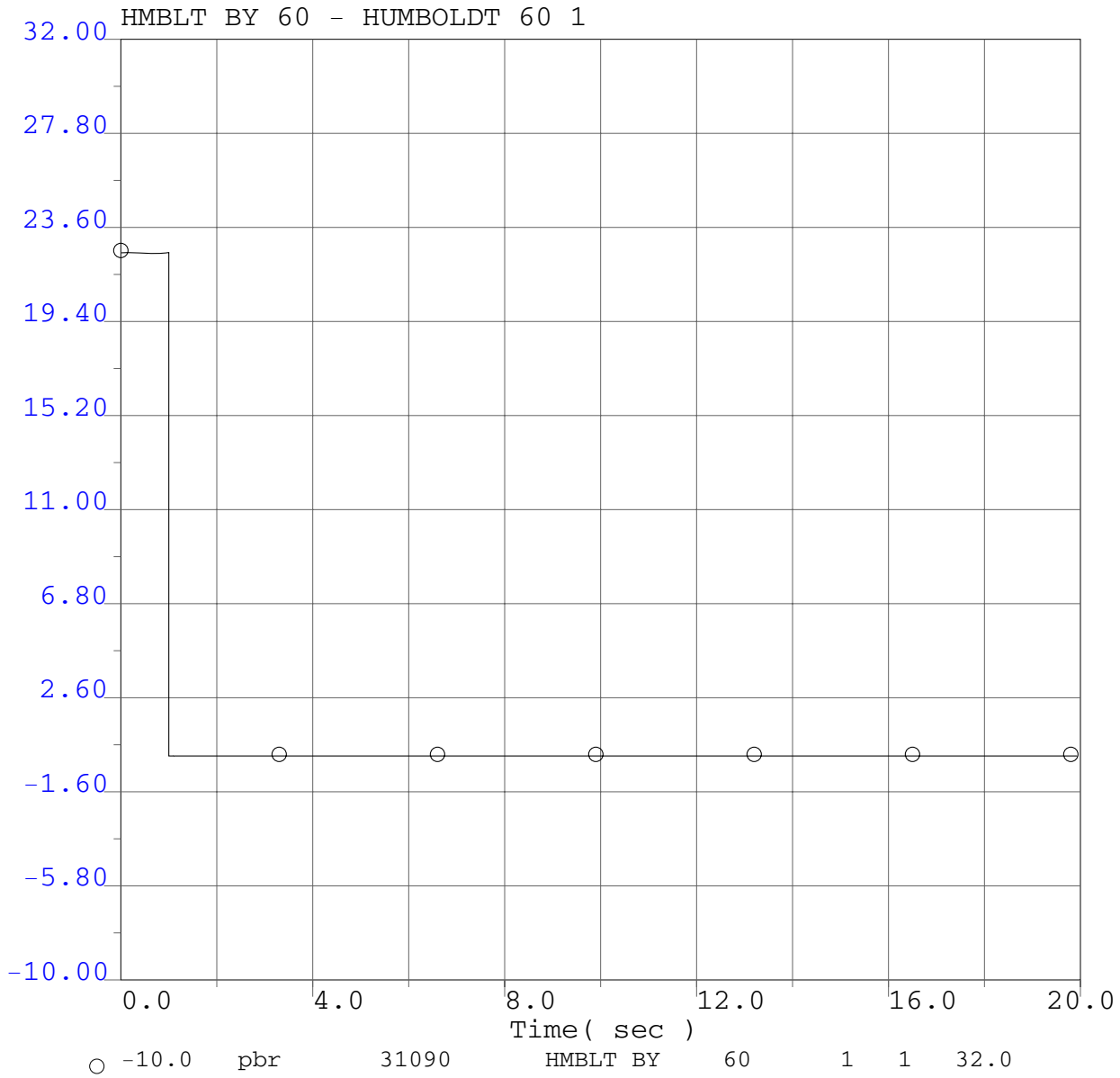

P0411 Project System Impact Study
2008 Winter Peak Base Case
P0411 @ 166.4MW
Humboldt Bay PP Bus outage
3 ph 6 cyc flt @ Humboldt Bay PP 60kV bus & clr HBay 60kV bus

P0411 Project System Impact Study

Selected PG&E Transmission Line Flows (MW)

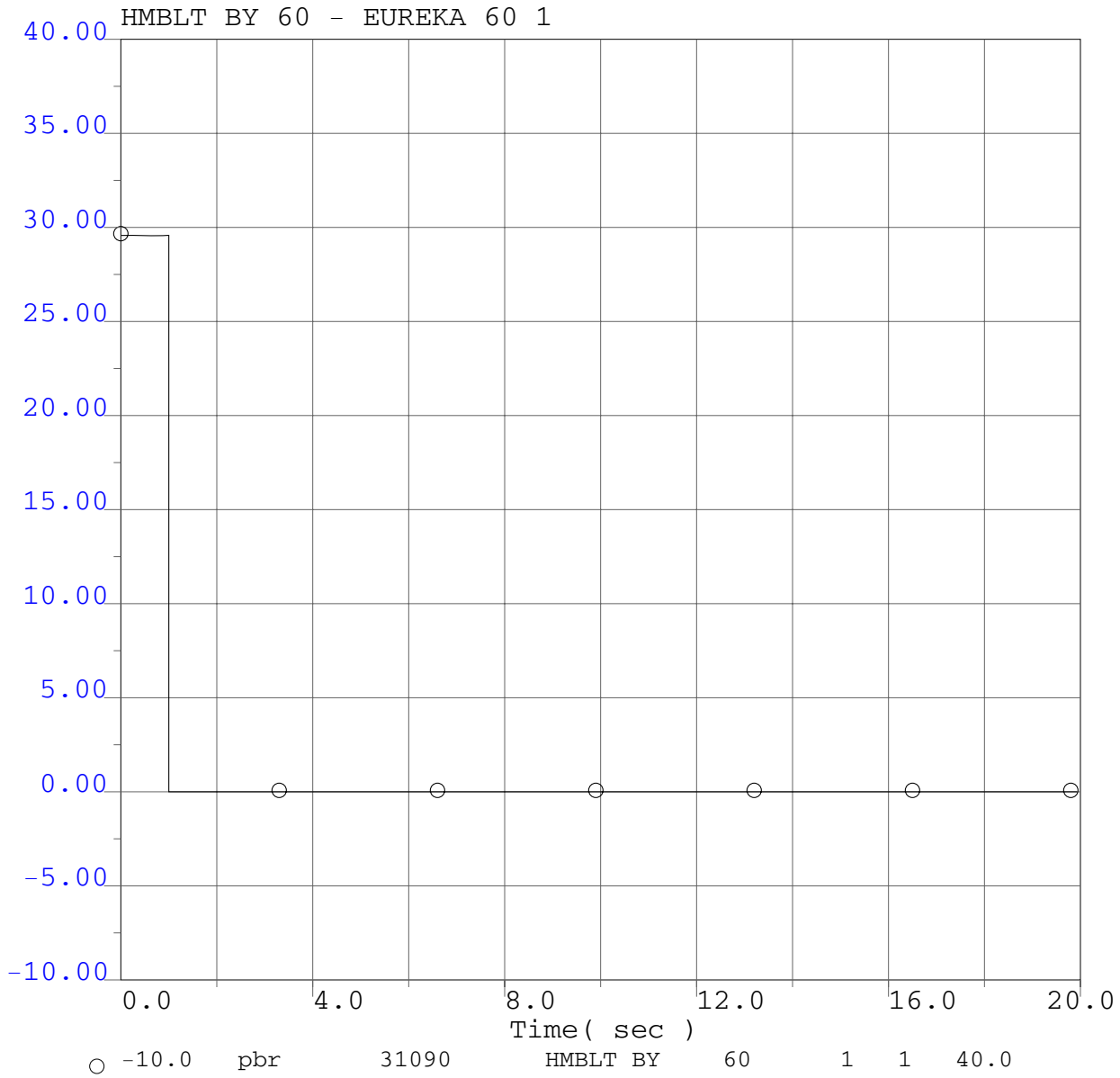

P0411 Project System Impact Study
2008 Winter Peak Base Case
P0411 @ 166.4MW
Humboldt Bay PP Bus outage
3 ph 6 cyc flt @ Humboldt Bay PP 60kV bus & clr HBay 60kV bus

P0411 Project System Impact Study

Selected PG&E Transmission Line Flows (MW)

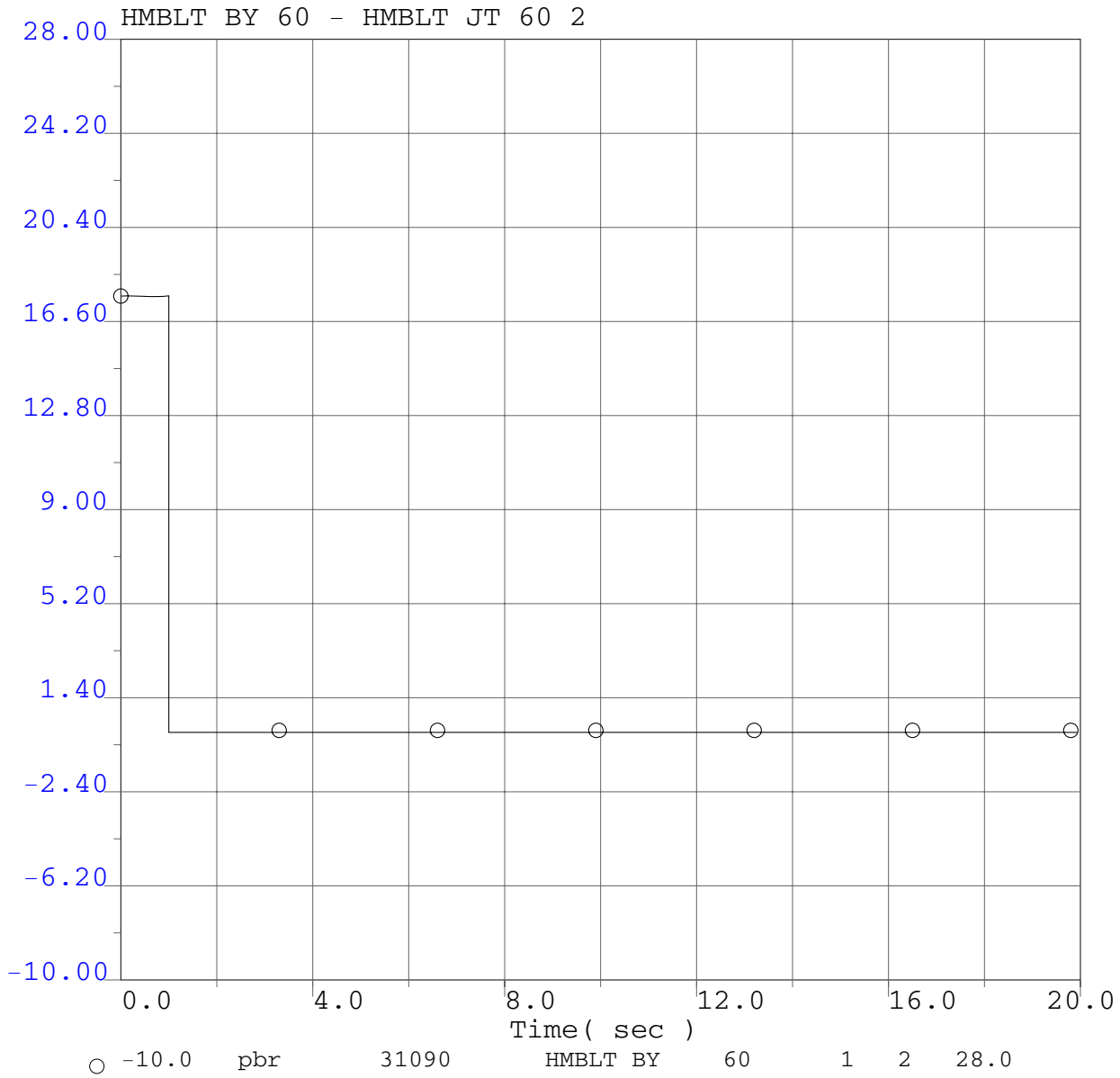

P0411 Project System Impact Study
2008 Winter Peak Base Case
P0411 @ 166.4MW
Humboldt Bay PP Bus outage
3 ph 6 cyc flt @ Humboldt Bay PP 60kV bus & clr HBay 60kV bus

P0411 Project System Impact Study

Selected PG&E Transmission Line Flows (MW)

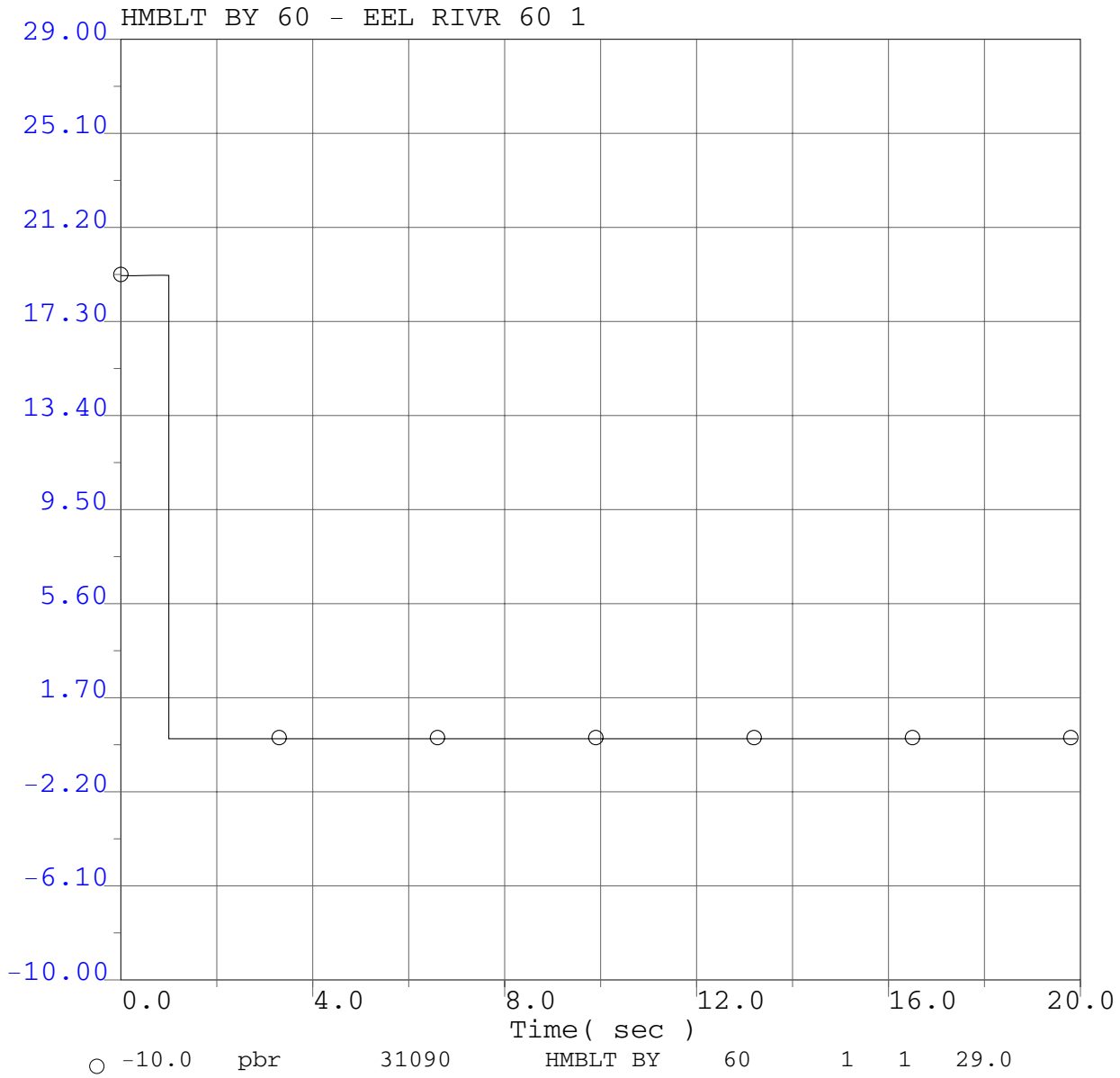

P0411 Project System Impact Study
2008 Winter Peak Base Case
P0411 @ 166.4MW
Humboldt Bay PP Bus outage
3 ph 6 cyc flt @ Humboldt Bay PP 60kV bus & clr HBay 60kV bus

P0411 Project System Impact Study

Selected PG&E Transmission Line Flows (MW)

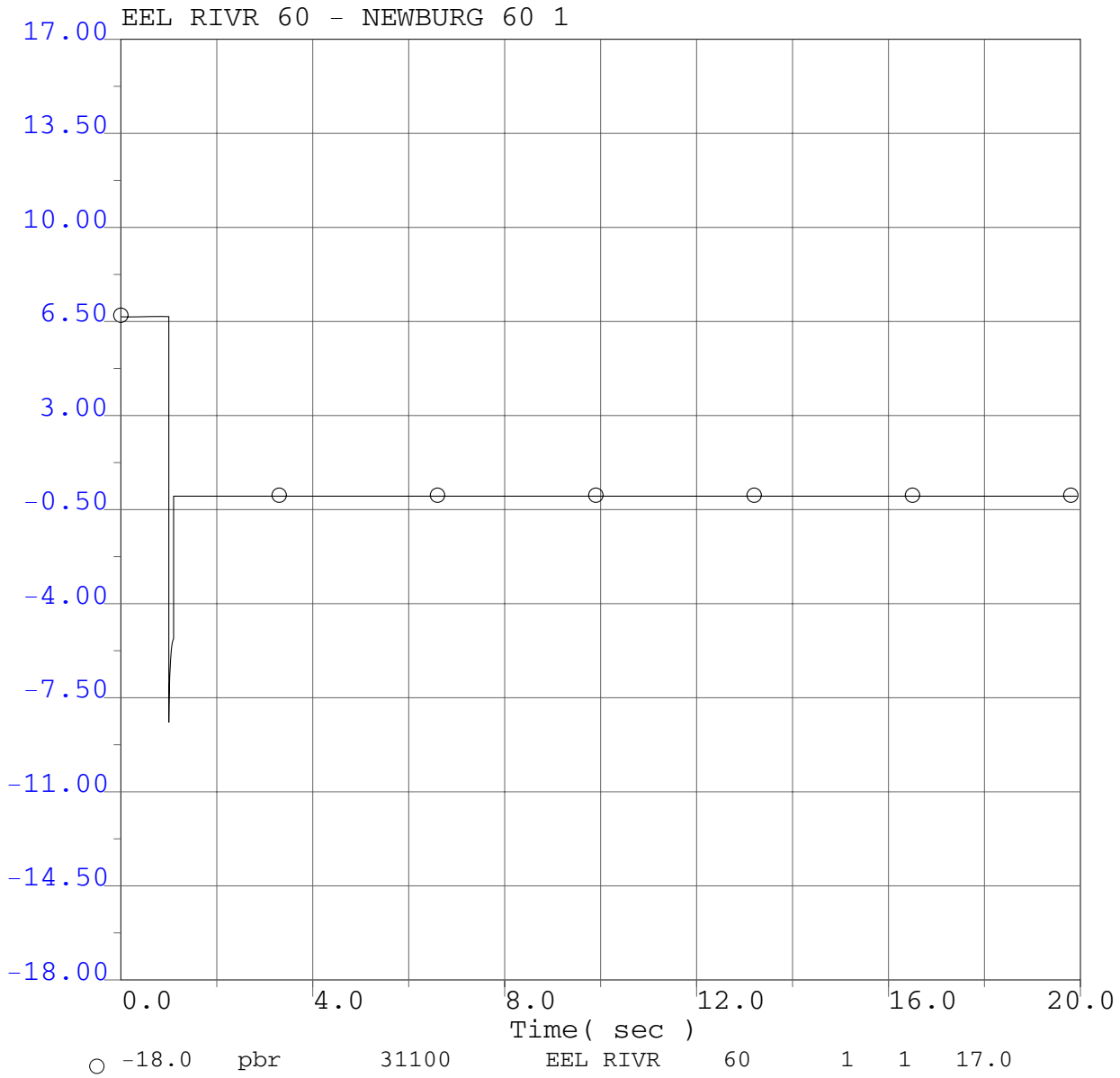

P0411 Project System Impact Study
2008 Winter Peak Base Case
P0411 @ 166.4MW
Humboldt Bay PP Bus outage
3 ph 6 cyc flt @ Humboldt Bay PP 60kV bus & clr HBay 60kV bus

P0411 Project System Impact Study

Selected PG&E Transmission Line Flows (MW)

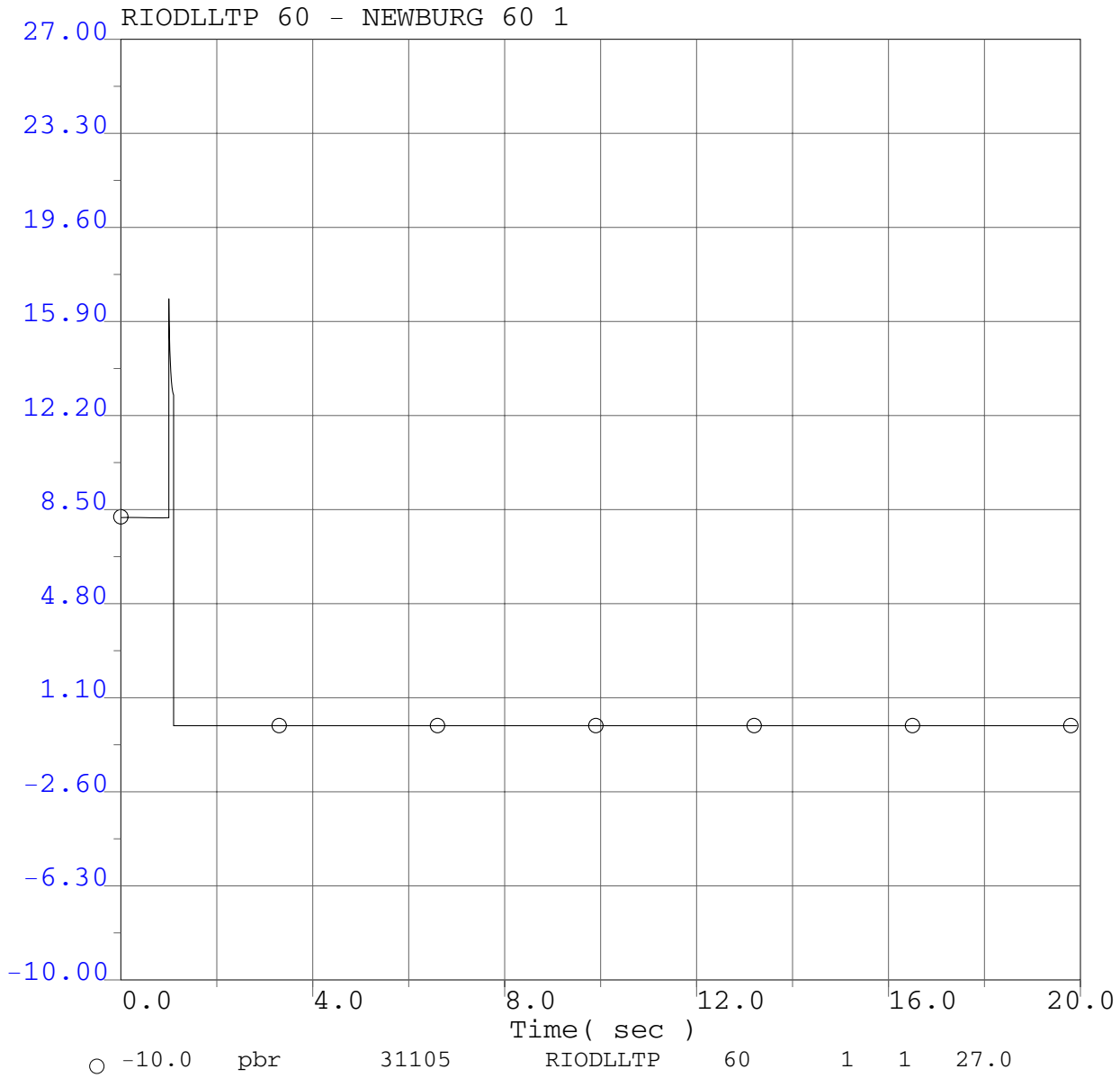

P0411 Project System Impact Study
2008 Winter Peak Base Case
P0411 @ 166.4MW
Humboldt Bay PP Bus outage
3 ph 6 cyc flt @ Humboldt Bay PP 60kV bus & clr HBay 60kV bus

P0411 Project System Impact Study

Selected PG&E Transmission Line Flows (MW)

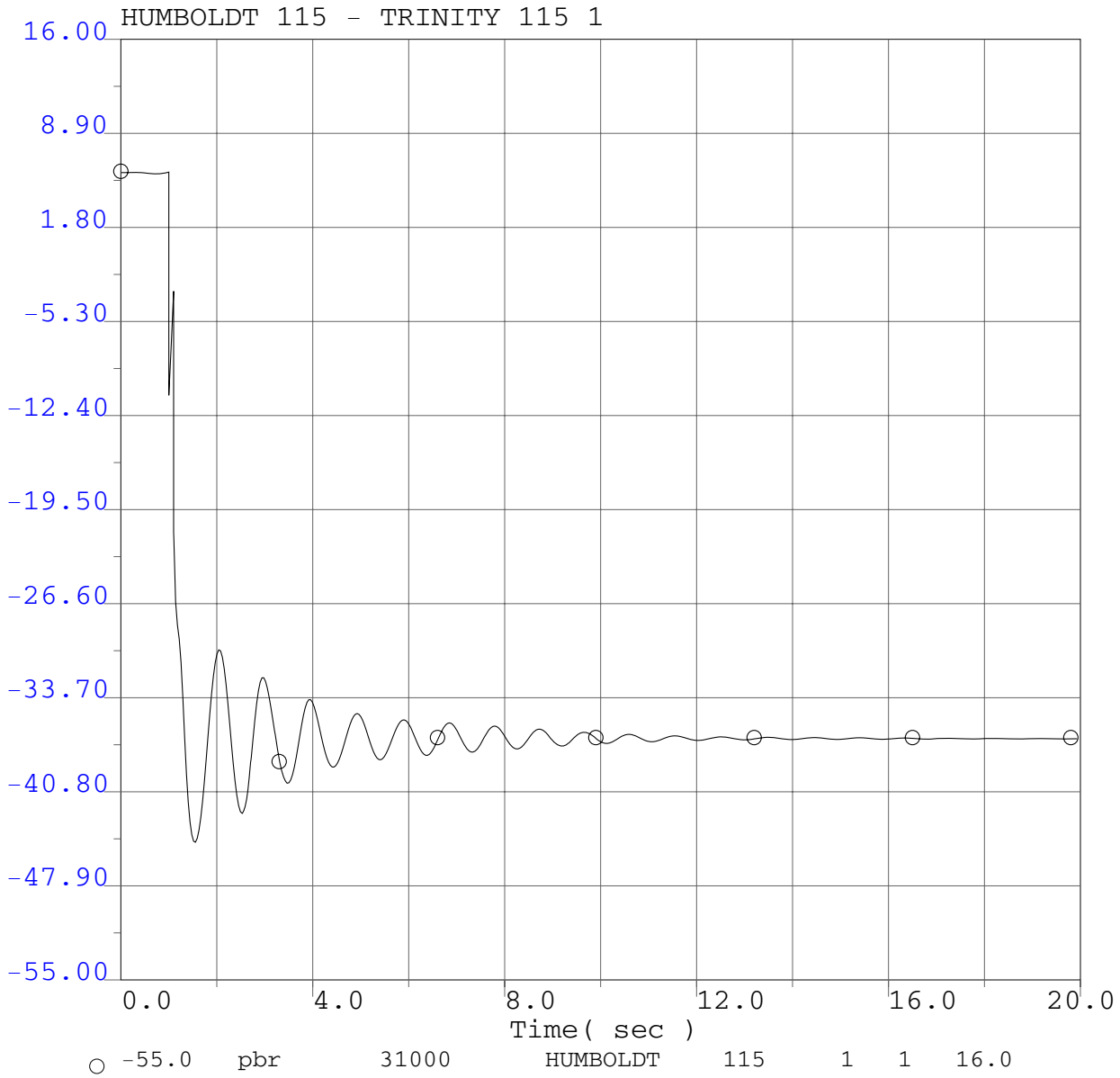

P0411 Project System Impact Study
2008 Winter Peak Base Case
P0411 @ 166.4MW
Humboldt Bay PP Bus outage
3 ph 6 cyc flt @ Humboldt Bay PP 60kV bus & clr HBay 60kV bus

P0411 Project System Impact Study

Selected PG&E Transmission Line Flows (MW)

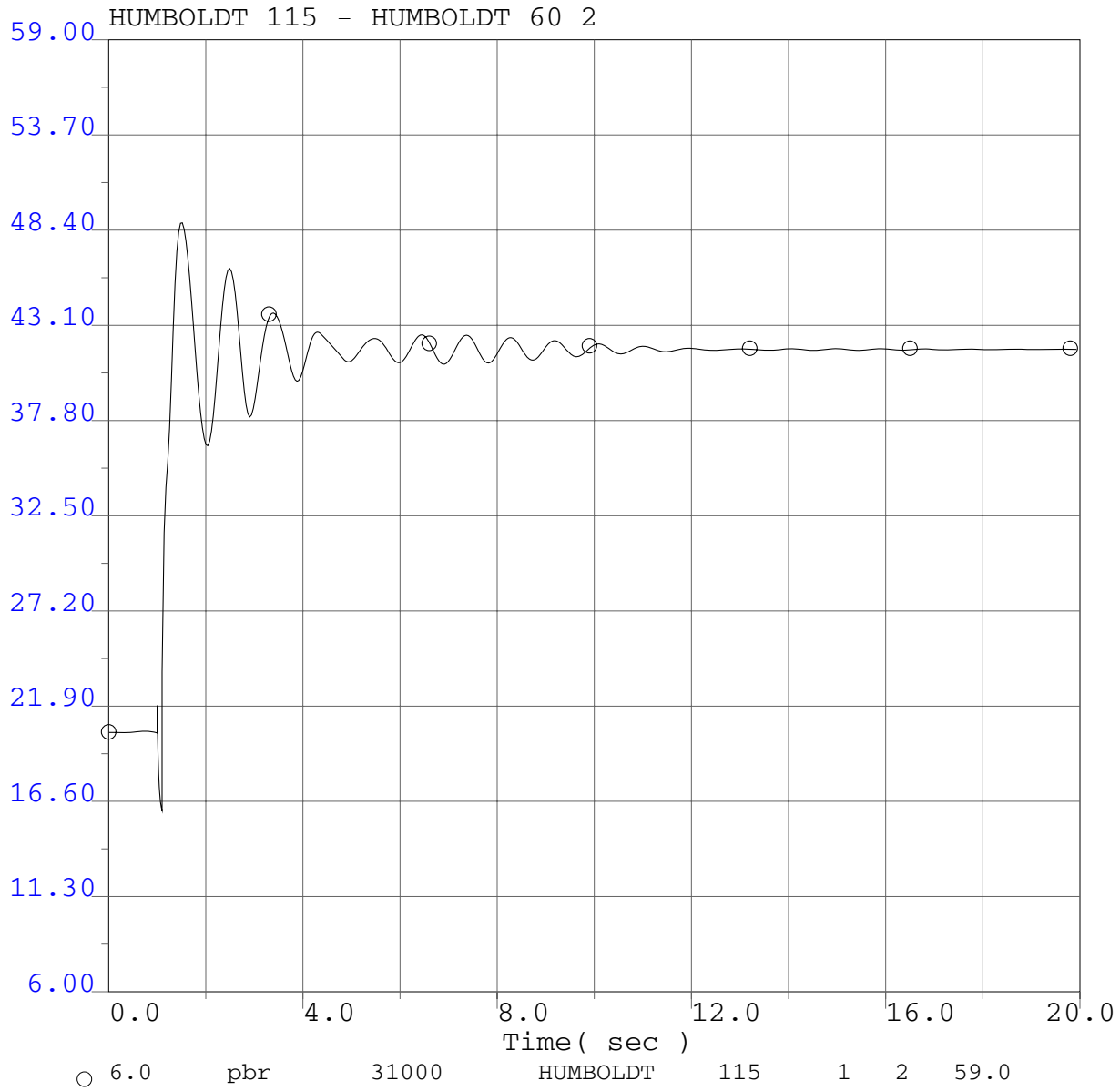

P0411 Project System Impact Study
2008 Winter Peak Base Case
P0411 @ 166.4MW
Humboldt Bay PP Bus outage
3 ph 6 cyc flt @ Humboldt Bay PP 60kV bus & clr HBay 60kV bus

P0411 Project System Impact Study

Selected PG&E Transmission Line Flows (MW)

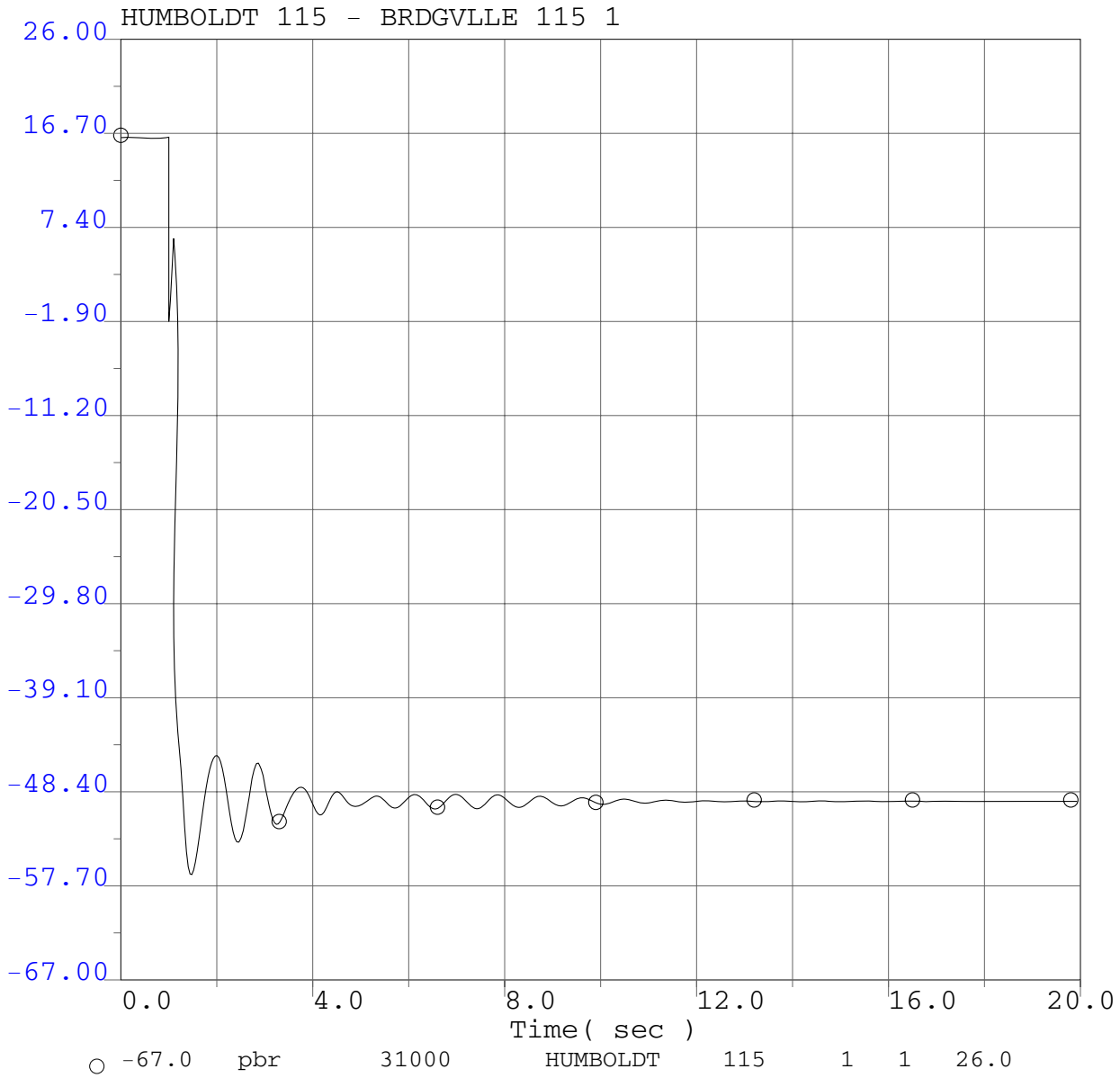

P0411 Project System Impact Study
2008 Winter Peak Base Case
P0411 @ 166.4MW
Humboldt Bay PP Bus outage
3 ph 6 cyc flt @ Humboldt Bay PP 60kV bus & clr HBay 60kV bus

P0411 Project System Impact Study

Selected PG&E Transmission Line Flows (MW)

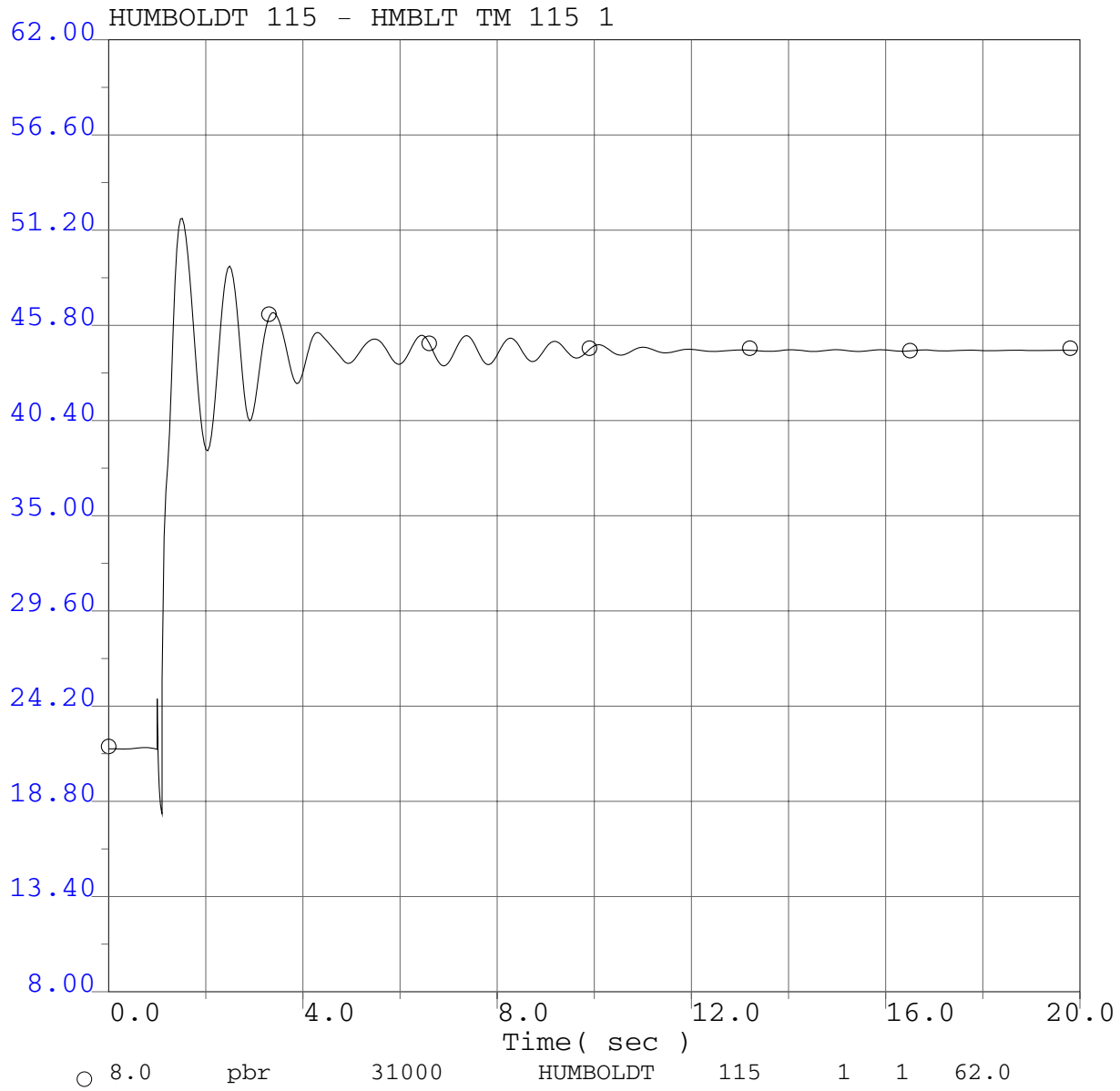

P0411 Project System Impact Study
2008 Winter Peak Base Case
P0411 @ 166.4MW
Humboldt Bay PP Bus outage
3 ph 6 cyc flt @ Humboldt Bay PP 60kV bus & clr HBay 60kV bus

P0411 Project System Impact Study

Selected PG&E Bus Voltage Plots Adjacent to Fault

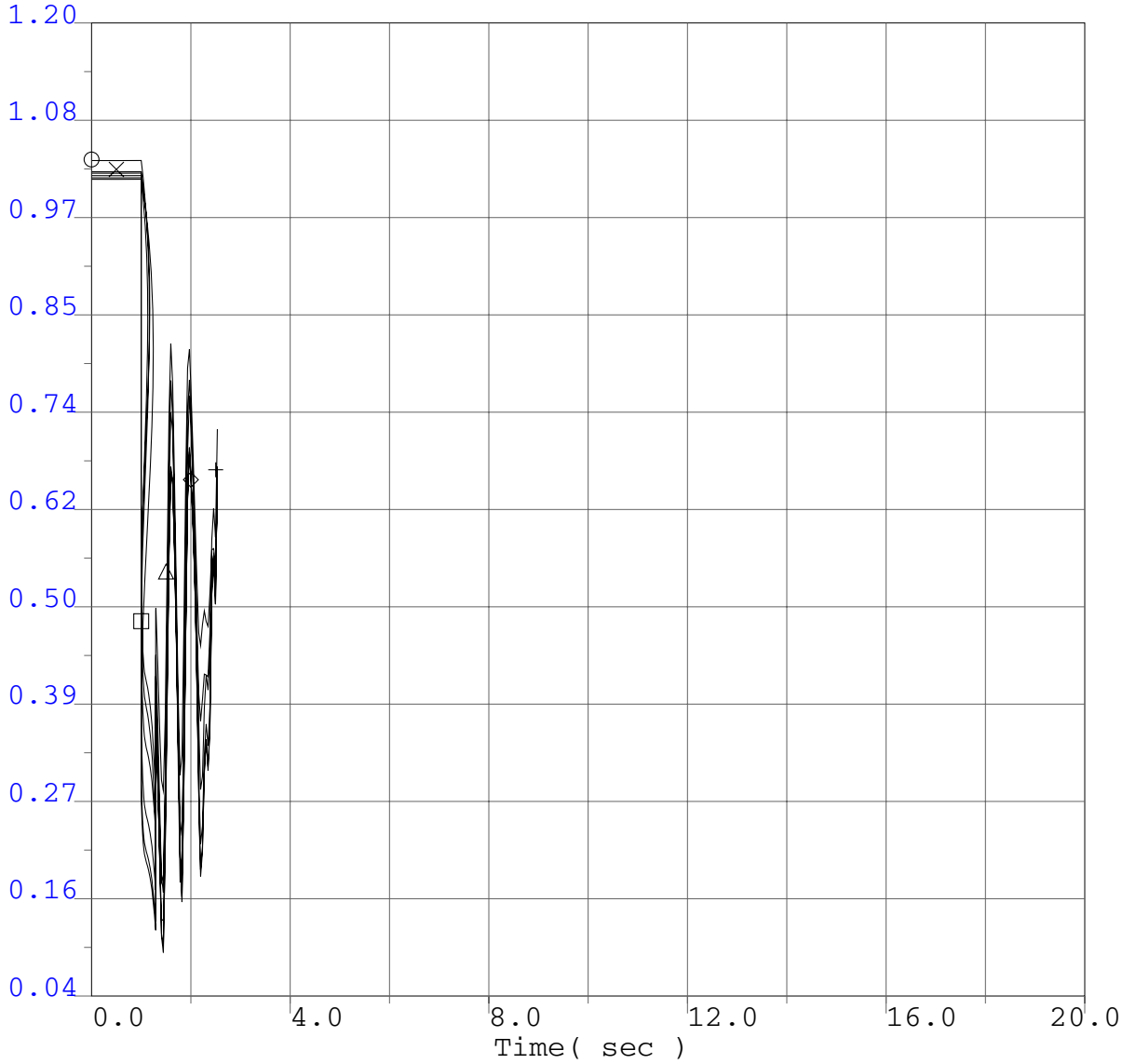

○	0.04	vbul	31090	HMBLT BY	60.0	"*"	1	1.2
×	0.04	vbus	31080	HUMBOLDT	60.0	"*"	1	1.2
□	0.04	vbul	31102	NEWBURG	60.0	"*"	1	1.2
△	0.04	vbus	31105	RIODLLTP	60.0	"*"	1	1.2
◇	0.04	vbul	31086	EUREKA	60.0	"*"	1	1.2
+	0.04	vbul	31082	HARRIS	60.0	"*"	1	1.2

P0411 Project System Impact Study
2008 Winter Peak Base Case
P0411 @ 166.4MW
Humboldt 115kV Bus outage
3 ph 17.4 cyc flt @ Humboldt 115kV bus & clr Humboldt 115kV bus

P0411 Project System Impact Study

Selected PG&E Bus Frequency Plots Adjacent to Fault

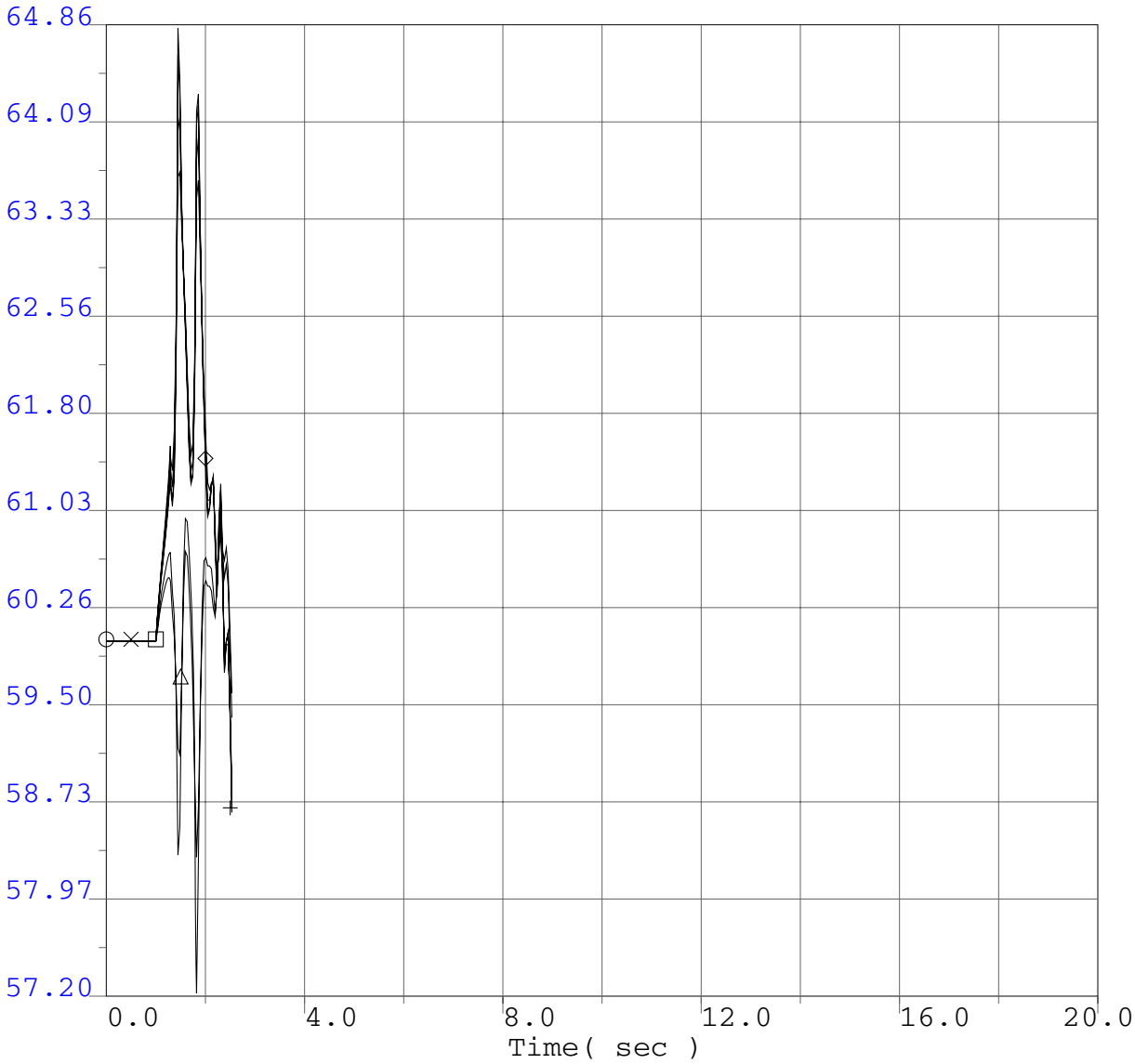

○	57.2	fbul	31090	HMBLT BY	60.0	"*" 1	64.86
×	57.2	fbus	31080	HUMBOLDT	60.0	"*" 1	64.86
□	57.2	fbul	31102	NEWBURG	60.0	"*" 1	64.86
△	57.2	fbus	31105	RIODLLTP	60.0	"*" 1	64.86
◇	57.2	fbul	31086	EUREKA	60.0	"*" 1	64.86
+	57.2	fbul	31082	HARRIS	60.0	"*" 1	64.86

P0411 Project System Impact Study
2008 Winter Peak Base Case
P0411 @ 166.4MW
Humboldt 115kV Bus outage
3 ph 17.4 cyc flt @ Humboldt 115kV bus & clr Humboldt 115kV bus

P0411 Project System Impact Study

Project Generator Terminal Voltages

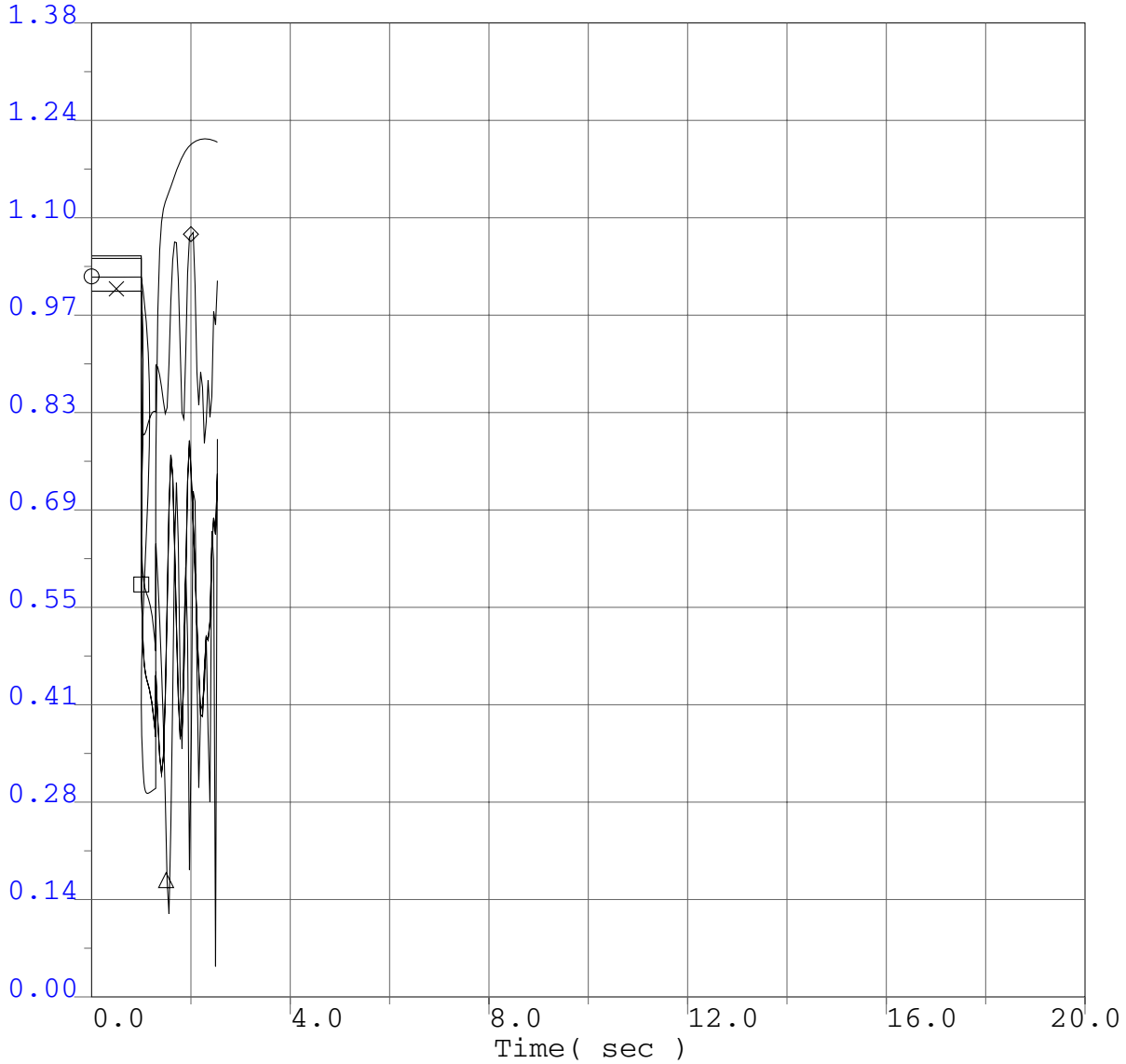

○	0.0	vt	31180	P0411G1	13.8	"1" 1	1.38
×	0.0	vt	31181	P0411G2	13.8	"5" 1	1.38
□	0.0	vt	31182	P0411G3	13.8	"8" 1	1.38
△	0.0	vt	31150	FAIRHAVN	13.8	"1" 1	1.38
◇	0.0	vt	31158	LP SAMOA	12.5	"1" 1	1.38

P0411 Project System Impact Study
2008 Winter Peak Base Case
P0411 @ 166.4MW
Humboldt 115kV Bus outage
3 ph 17.4 cyc flt @ Humboldt 115kV bus & clr Humboldt 115kV bus

P0411 Project System Impact Study

Project Generator Rotor Speed

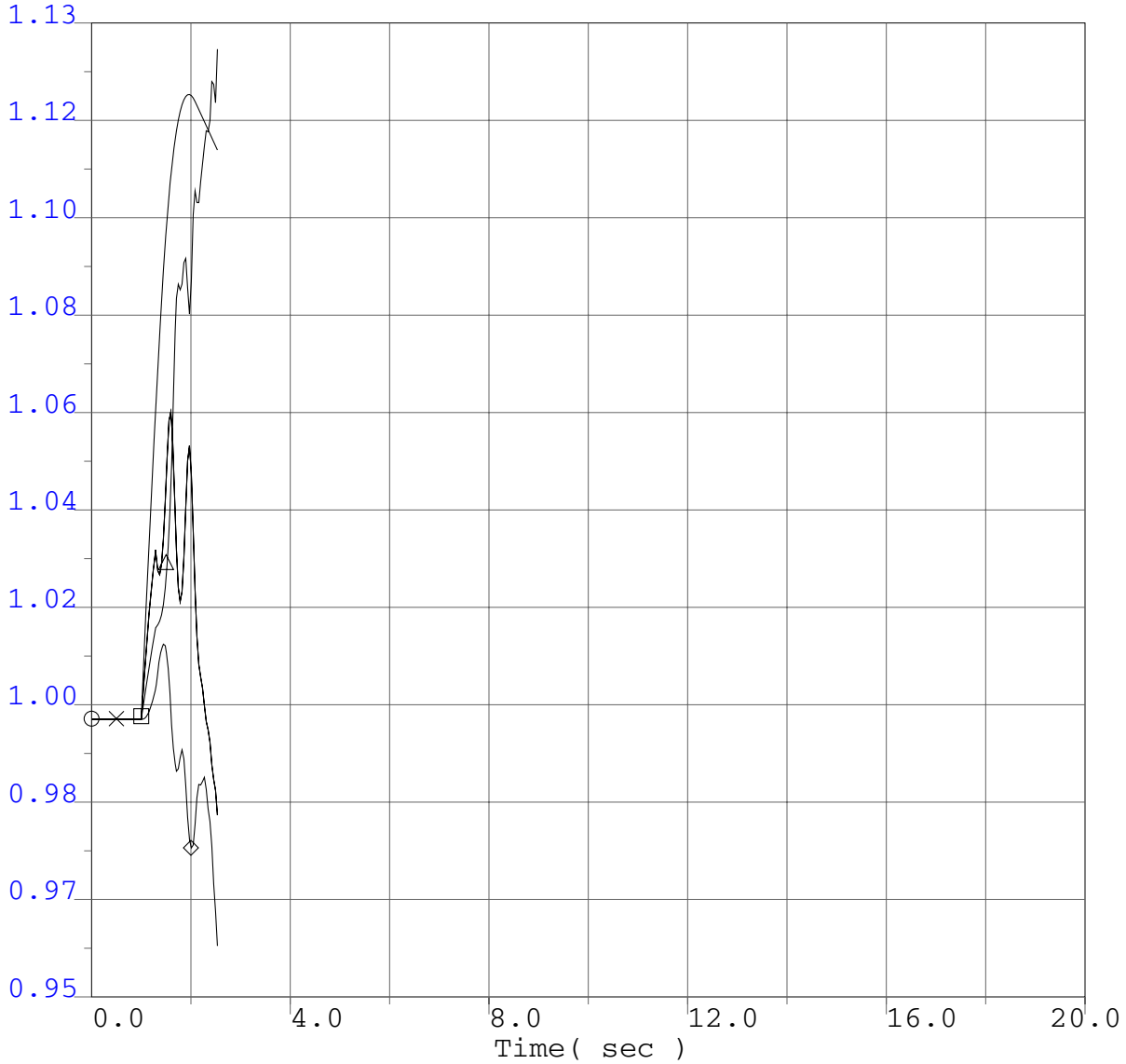

○	0.9465	spd	31180	P0411G1	13.8	"1" 1	1.1342
×	0.9465	spd	31181	P0411G2	13.8	"5" 1	1.1342
□	0.9465	spd	31182	P0411G3	13.8	"8" 1	1.1342
△	0.9465	spd	31150	FAIRHAVN	13.8	"1" 1	1.1342
◇	0.9465	spd	31158	LP SAMOA	12.5	"1" 1	1.1342

P0411 Project System Impact Study
2008 Winter Peak Base Case
P0411 @ 166.4MW
Humboldt 115kV Bus outage
3 ph 17.4 cyc flt @ Humboldt 115kV bus & clr Humboldt 115kV bus

P0411 Project System Impact Study

Project Generator Terminal Power

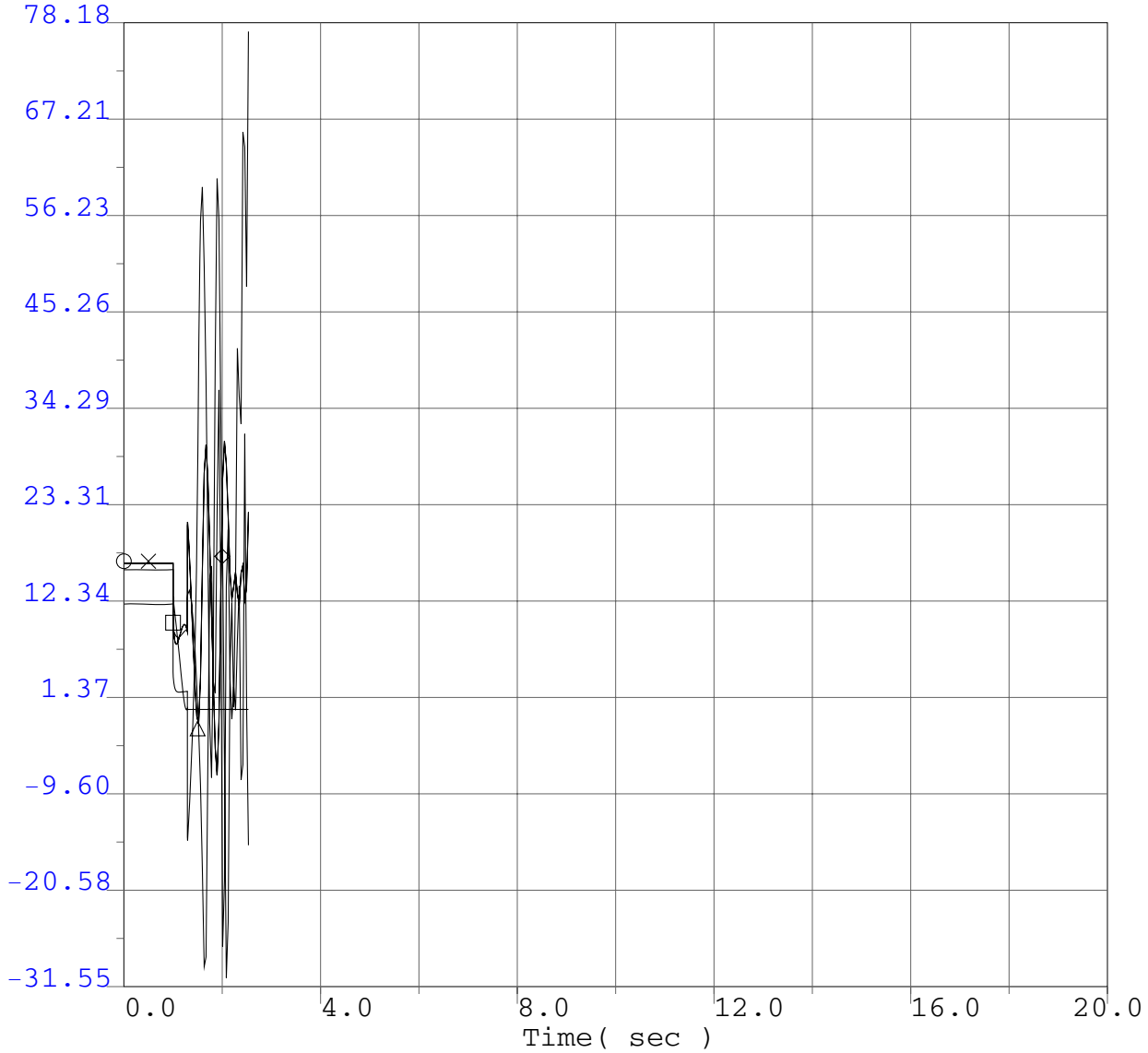

○	-31.55	pg	31180	P0411G1	13.8	"1" 1	78.18
×	-31.55	pg	31181	P0411G2	13.8	"5" 1	78.18
□	-31.55	pg	31182	P0411G3	13.8	"8" 1	78.18
△	-31.55	pg	31150	FAIRHAVN	13.8	"1" 1	78.18
◇	-31.55	pg	31158	LP SAMOA	12.5	"1" 1	78.18

P0411 Project System Impact Study
2008 Winter Peak Base Case
P0411 @ 166.4MW
Humboldt 115kV Bus outage
3 ph 17.4 cyc flt @ Humboldt 115kV bus & clr Humboldt 115kV bus

P0411 Project System Impact Study

Project Generator Terminal Reactive Power

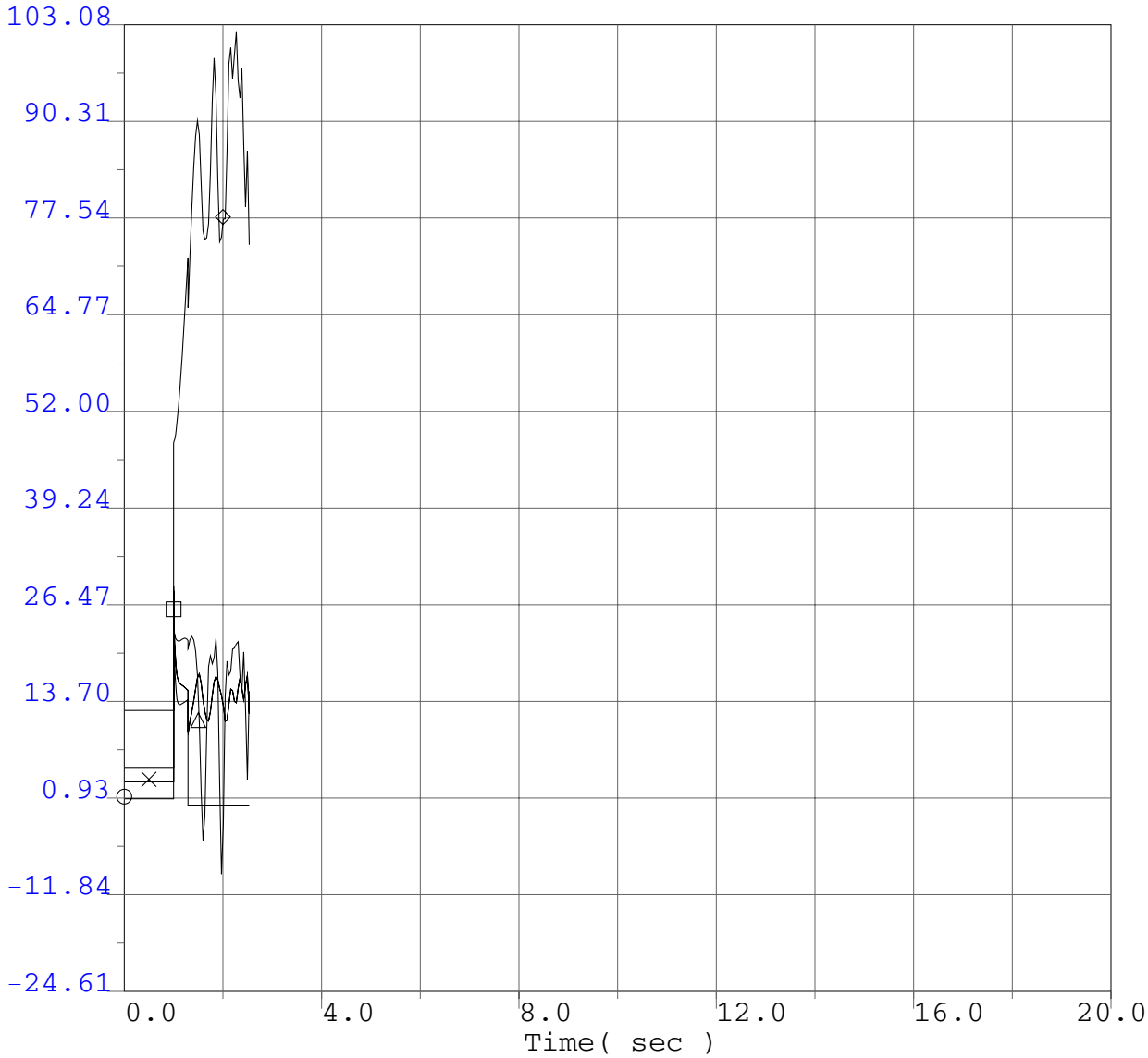

○	-24.61	qg	31180	P0411G1	13.8	"1"	1	103.08
×	-24.61	qg	31181	P0411G2	13.8	"5"	1	103.08
□	-24.61	qg	31182	P0411G3	13.8	"8"	1	103.08
△	-24.61	qg	31150	FAIRHAVN	13.8	"1"	1	103.08
◇	-24.61	qg	31158	LP SAMOA	12.5	"1"	1	103.08

P0411 Project System Impact Study
2008 Winter Peak Base Case
P0411 @ 166.4MW
Humboldt 115kV Bus outage
3 ph 17.4 cyc flt @ Humboldt 115kV bus & clr Humboldt 115kV bus

P0411 Project System Impact Study

Selected WECC Bus Voltage Plots

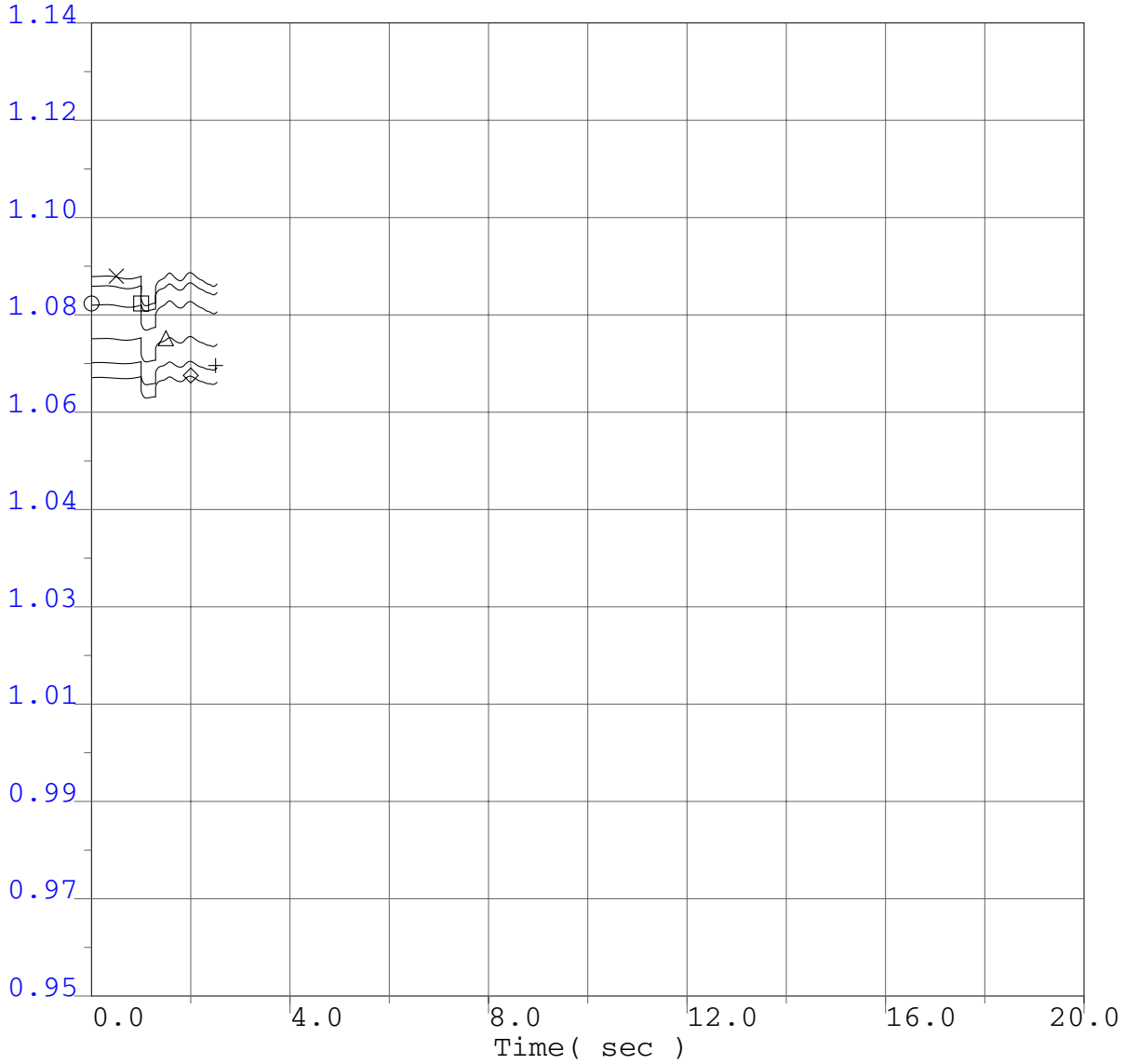

○	0.95	vbus	40687	MALIN	500.0	"*" 1	1.14
×	0.95	vbus	30005	ROUND MT	500.0	"*" 1	1.14
□	0.95	vbus	30015	TABLE MT	500.0	"*" 1	1.14
△	0.95	vbus	30030	VACA-DIX	500.0	"*" 1	1.14
◇	0.95	vbus	30040	TESLA	500.0	"*" 1	1.14
+	0.95	vbus	30035	TRACY	500.0	"*" 1	1.14

P0411 Project System Impact Study
2008 Winter Peak Base Case
P0411 @ 166.4MW
Humboldt 115kV Bus outage
3 ph 17.4 cyc flt @ Humboldt 115kV bus & clr Humboldt 115kV bus

P0411 Project System Impact Study

Selected WECC Bus Voltage Plots

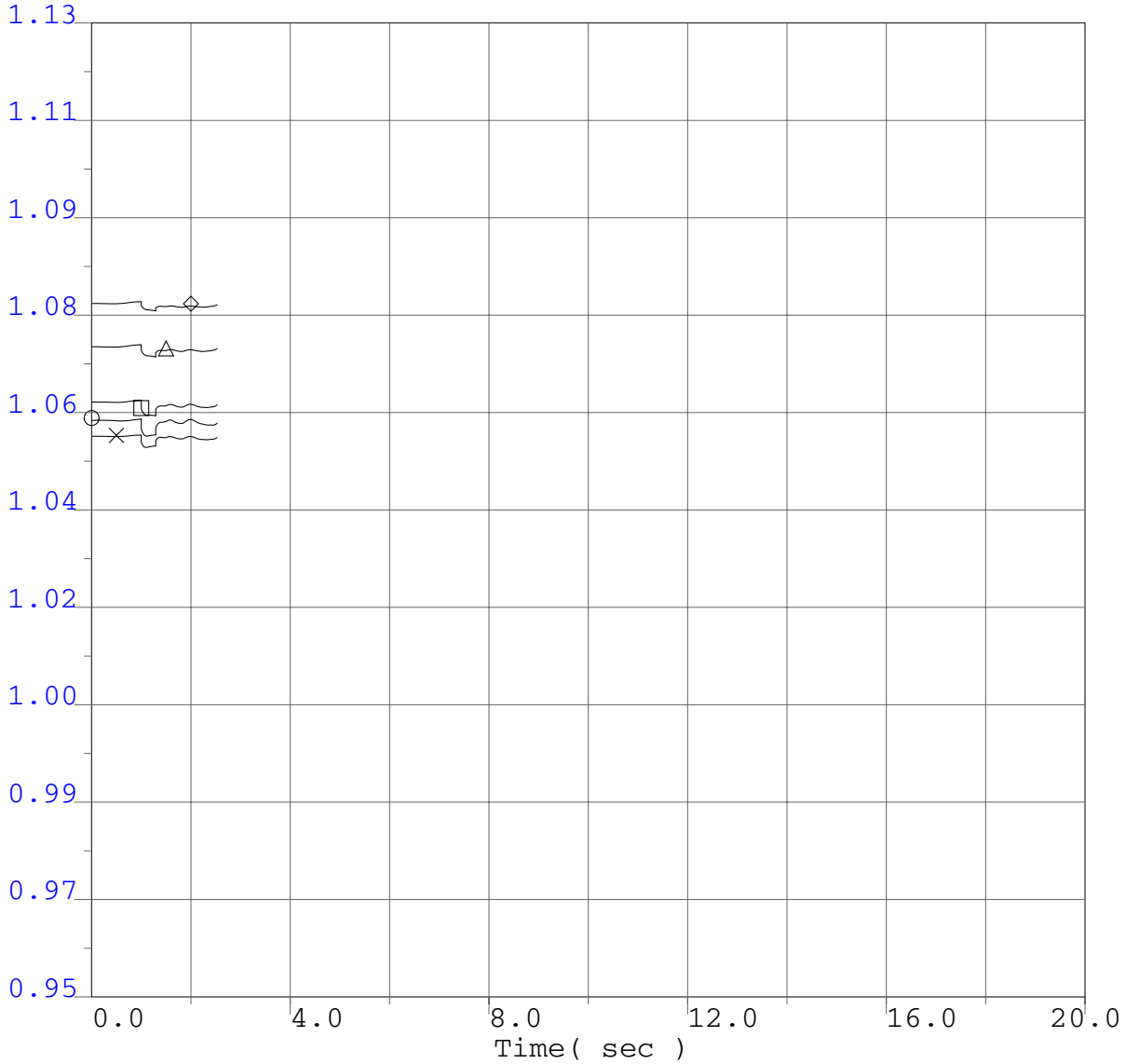

○	0.95	vbus	30042	METCALF	500.0	"*"	1	1.13
×	0.95	vbus	30045	MOSSLAND	500.0	"*"	1	1.13
□	0.95	vbus	30050	LOSBANOS	500.0	"*"	1	1.13
△	0.95	vbus	30055	GATES	500.0	"*"	1	1.13
◇	0.95	vbus	30060	MIDWAY	500.0	"*"	1	1.13

P0411 Project System Impact Study
2008 Winter Peak Base Case
P0411 @ 166.4MW
Humboldt 115kV Bus outage
3 ph 17.4 cyc flt @ Humboldt 115kV bus & clr Humboldt 115kV bus

P0411 Project System Impact Study

Selected WECC Bus Voltage Plots

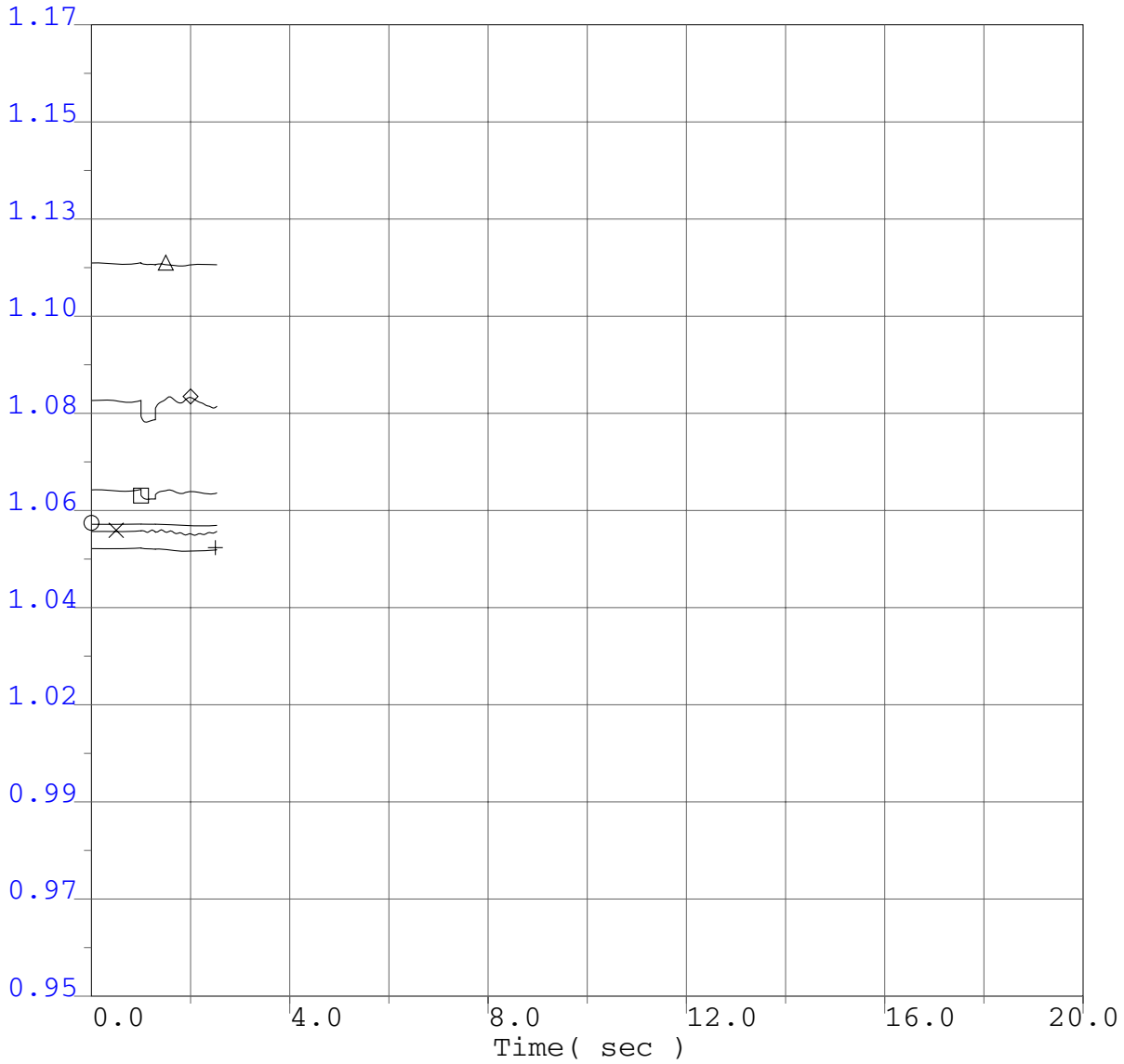

○	0.95	vbus	14001	FOURCORN	500.0	"*"	1	1.17
×	0.95	vbus	50703	NIC500	500.0	"*"	1	1.17
□	0.95	vbus	60240	MIDPOINT	500.0	"*"	1	1.17
△	0.95	vbus	62012	TOWN2	500.0	"*"	1	1.17
◇	0.95	vbus	40687	MALIN	500.0	"*"	1	1.17
+	0.95	vbus	66340	SIGURD	345.0	"*"	1	1.17

P0411 Project System Impact Study
2008 Winter Peak Base Case
P0411 @ 166.4MW
Humboldt 115kV Bus outage
3 ph 17.4 cyc flt @ Humboldt 115kV bus & clr Humboldt 115kV bus

P0411 Project System Impact Study

Selected WECC Bus Voltage Plots

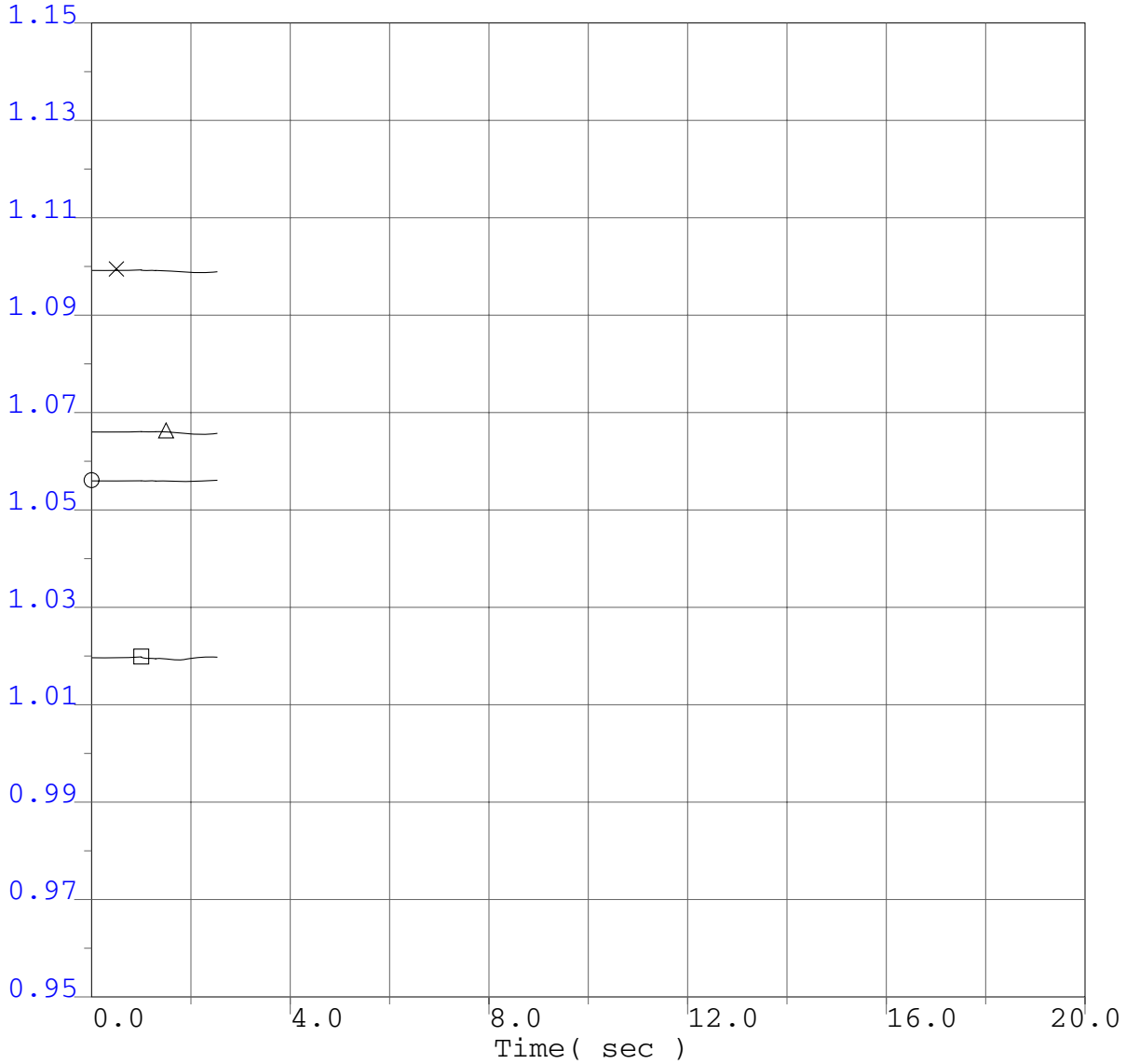

○ 0.95	vbus	54150	LANGDON2	500.0	"*"	1	1.15
× 0.95	vbus	14003	NAVAJO	500.0	"*"	1	1.15
□ 0.95	vbus	24153	VESTAL	230.0	"*"	1	1.15
△ 0.95	vbus	22360	IMPRLVLY	500.0	"*"	1	1.15

P0411 Project System Impact Study
2008 Winter Peak Base Case
P0411 @ 166.4MW
Humboldt 115kV Bus outage
3 ph 17.4 cyc flt @ Humboldt 115kV bus & clr Humboldt 115kV bus

P0411 Project System Impact Study

Selected WECC Bus Frequency Plots

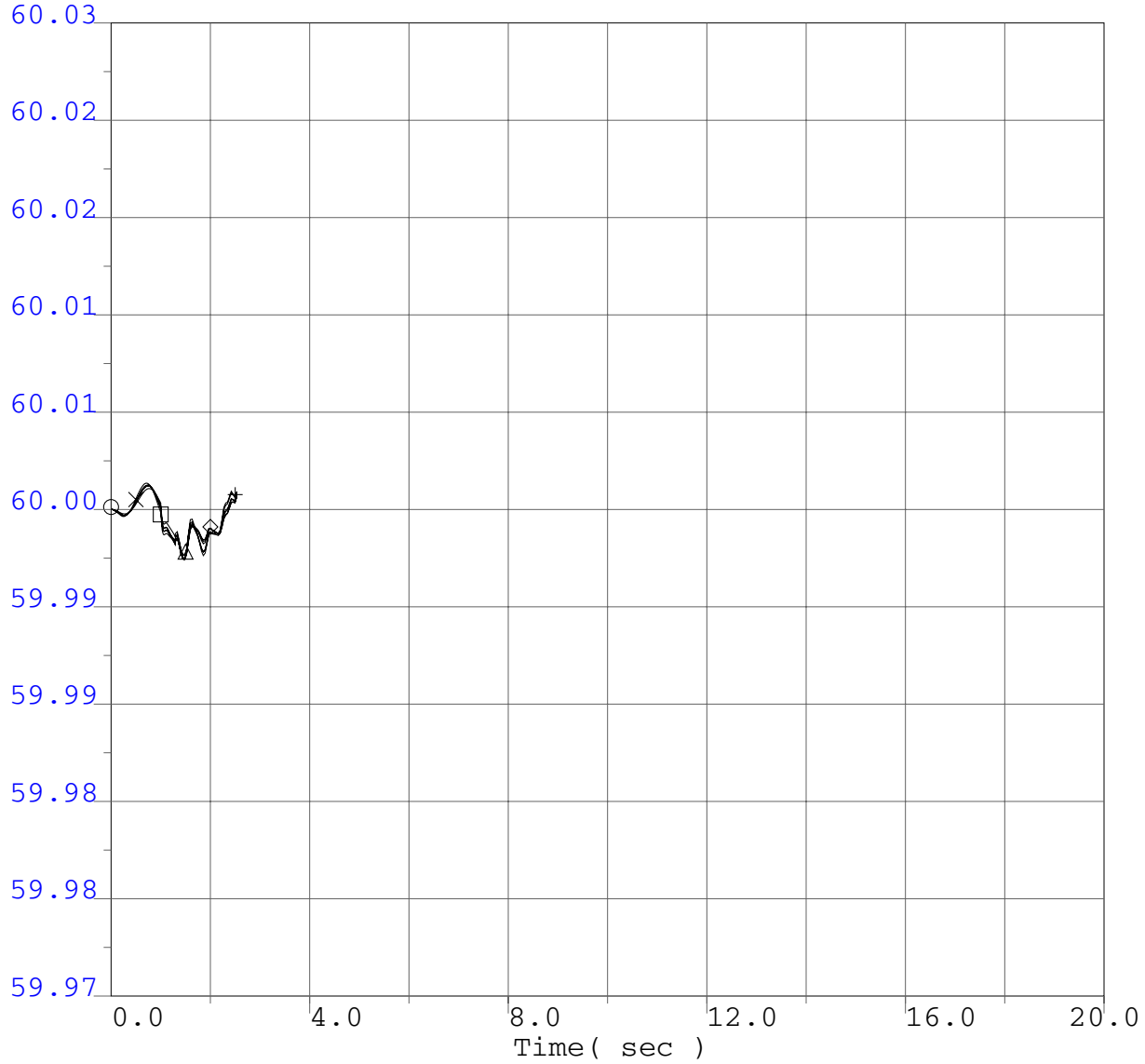

○	59.97	fbus	40687	MALIN	500.0	"*" 1	60.03
×	59.97	fbus	30005	ROUND MT	500.0	"*" 1	60.03
□	59.97	fbus	30015	TABLE MT	500.0	"*" 1	60.03
△	59.97	fbus	30030	VACA-DIX	500.0	"*" 1	60.03
◇	59.97	fbus	30040	TESLA	500.0	"*" 1	60.03
+	59.97	fbus	30035	TRACY	500.0	"*" 1	60.03

P0411 Project System Impact Study
2008 Winter Peak Base Case
P0411 @ 166.4MW
Humboldt 115kV Bus outage
3 ph 17.4 cyc flt @ Humboldt 115kV bus & clr Humboldt 115kV bus

P0411 Project System Impact Study

Selected WECC Bus Frequency Plots

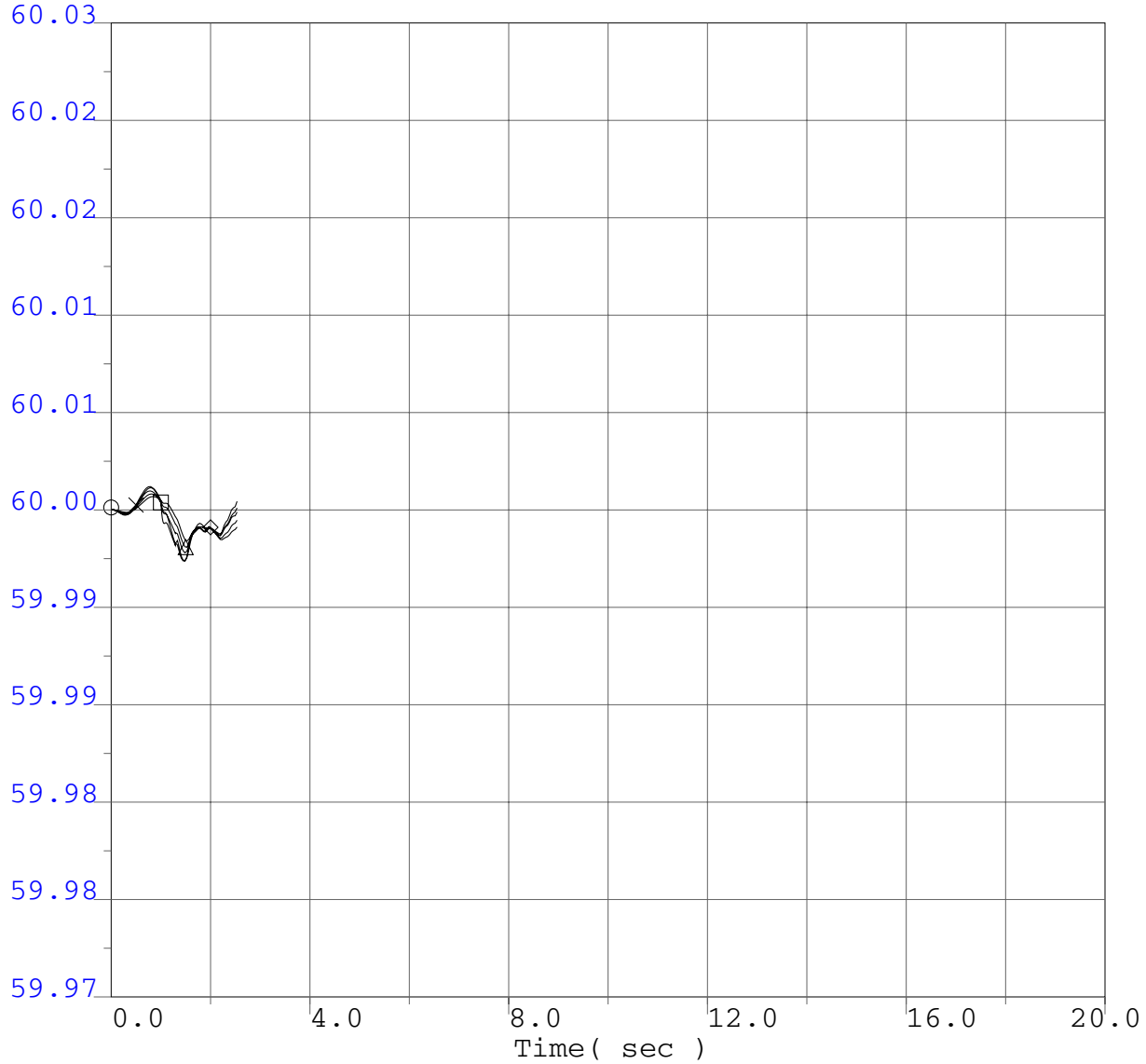

○	59.97	fbus	30042	METCALF	500.0	"*" 1	60.03
×	59.97	fbus	30045	MOSSLAND	500.0	"*" 1	60.03
□	59.97	fbus	30050	LOSBANOS	500.0	"*" 1	60.03
△	59.97	fbus	30055	GATES	500.0	"*" 1	60.03
◇	59.97	fbus	30060	MIDWAY	500.0	"*" 1	60.03

P0411 Project System Impact Study
2008 Winter Peak Base Case
P0411 @ 166.4MW
Humboldt 115kV Bus outage
3 ph 17.4 cyc flt @ Humboldt 115kV bus & clr Humboldt 115kV bus

P0411 Project System Impact Study

Selected WECC Bus Frequency Plots

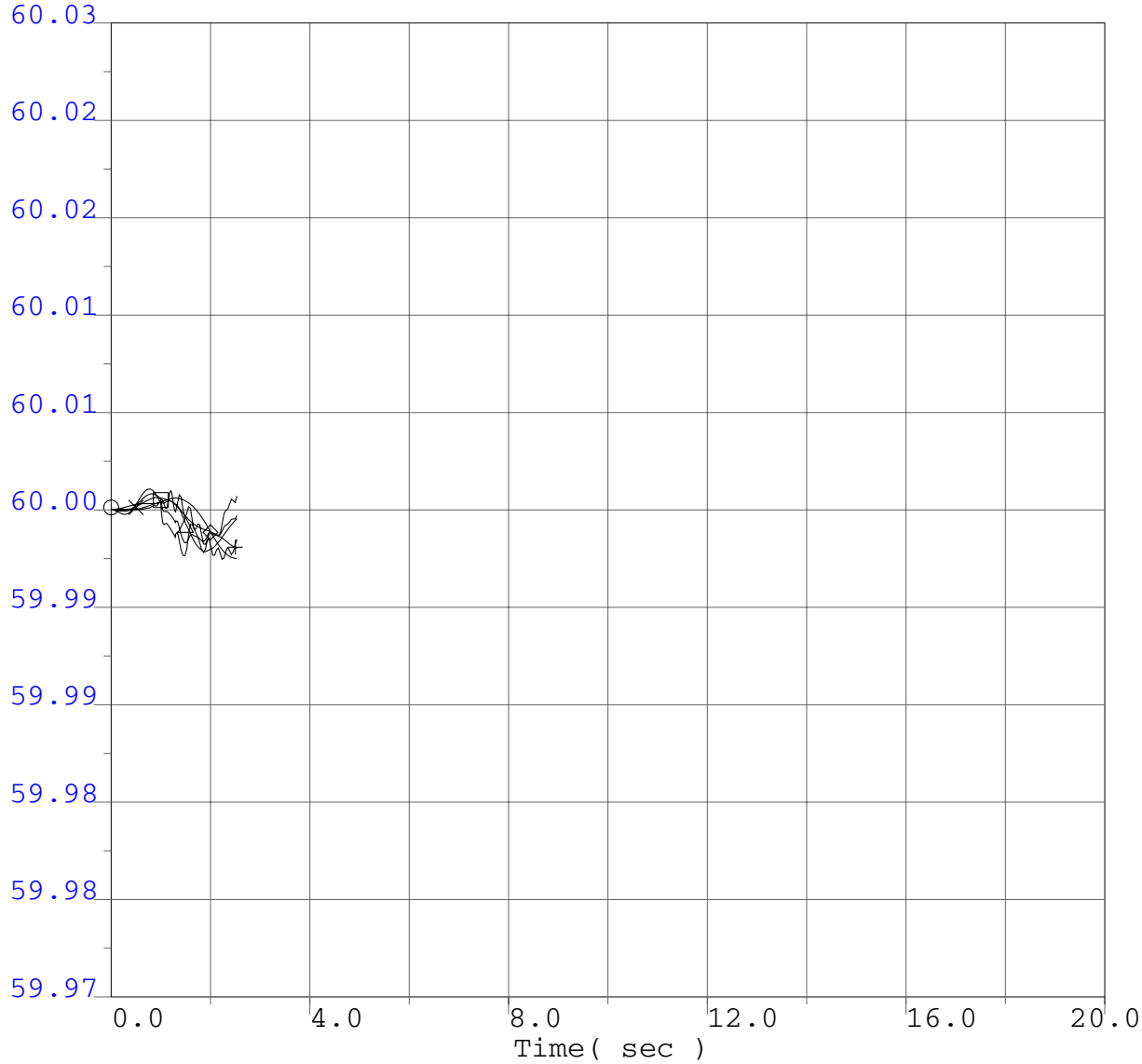

P0411 Project System Impact Study
2008 Winter Peak Base Case
P0411 @ 166.4MW
Humboldt 115kV Bus outage
3 ph 17.4 cyc flt @ Humboldt 115kV bus & clr Humboldt 115kV bus

P0411 Project System Impact Study

Selected WECC Bus Frequency Plots

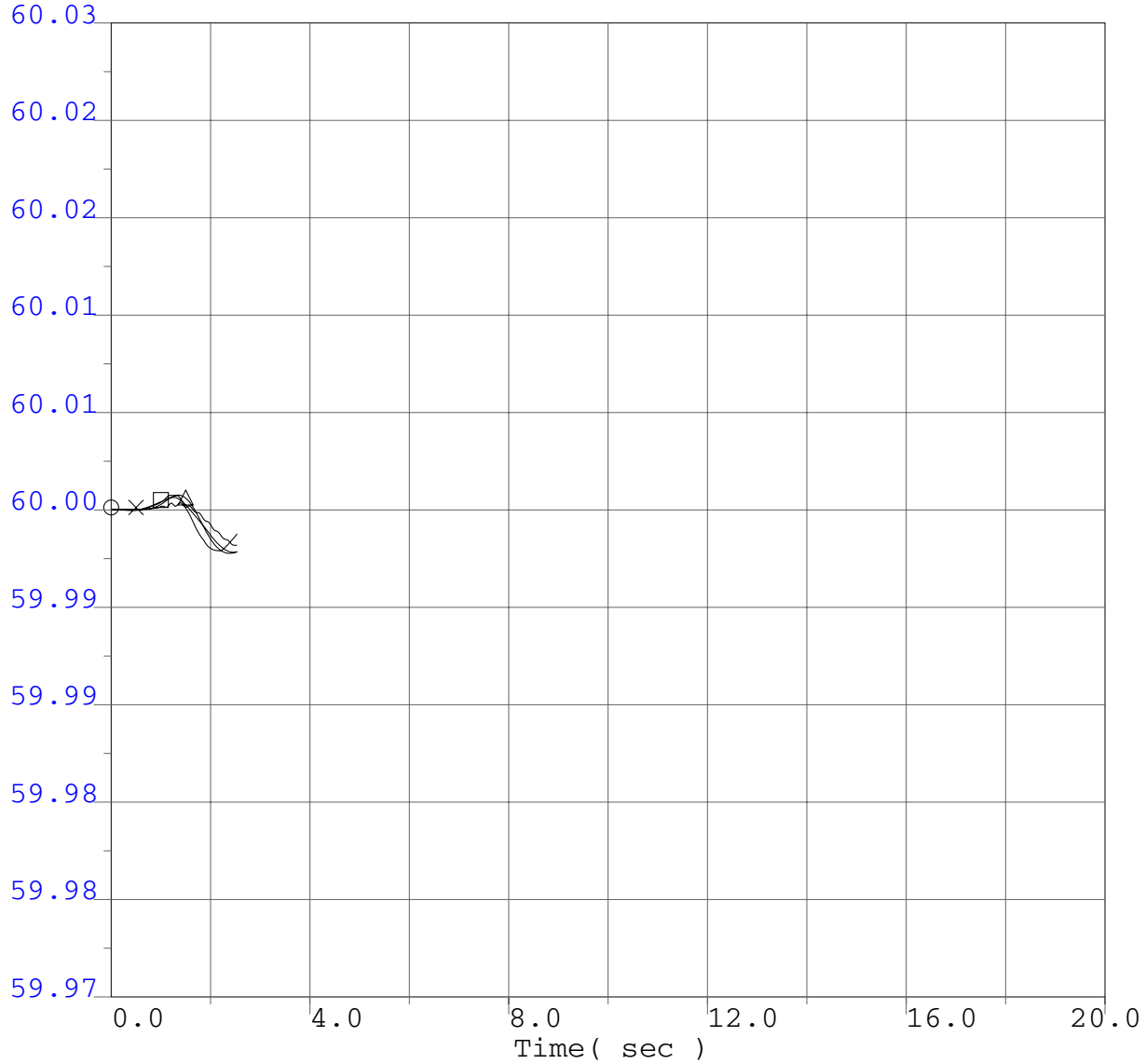

○ 59.97	fbus	54150	LANGDON2	500.0	"*"	1	60.03
× 59.97	fbus	14003	NAVAJO	500.0	"*"	1	60.03
□ 59.97	fbus	24153	VESTAL	230.0	"*"	1	60.03
△ 59.97	fbus	22360	IMPRLVLY	500.0	"*"	1	60.03

P0411 Project System Impact Study
2008 Winter Peak Base Case
P0411 @ 166.4MW
Humboldt 115kV Bus outage
3 ph 17.4 cyc flt @ Humboldt 115kV bus & clr Humboldt 115kV bus

P0411 Project System Impact Study

WECC Generator Rotor Angle

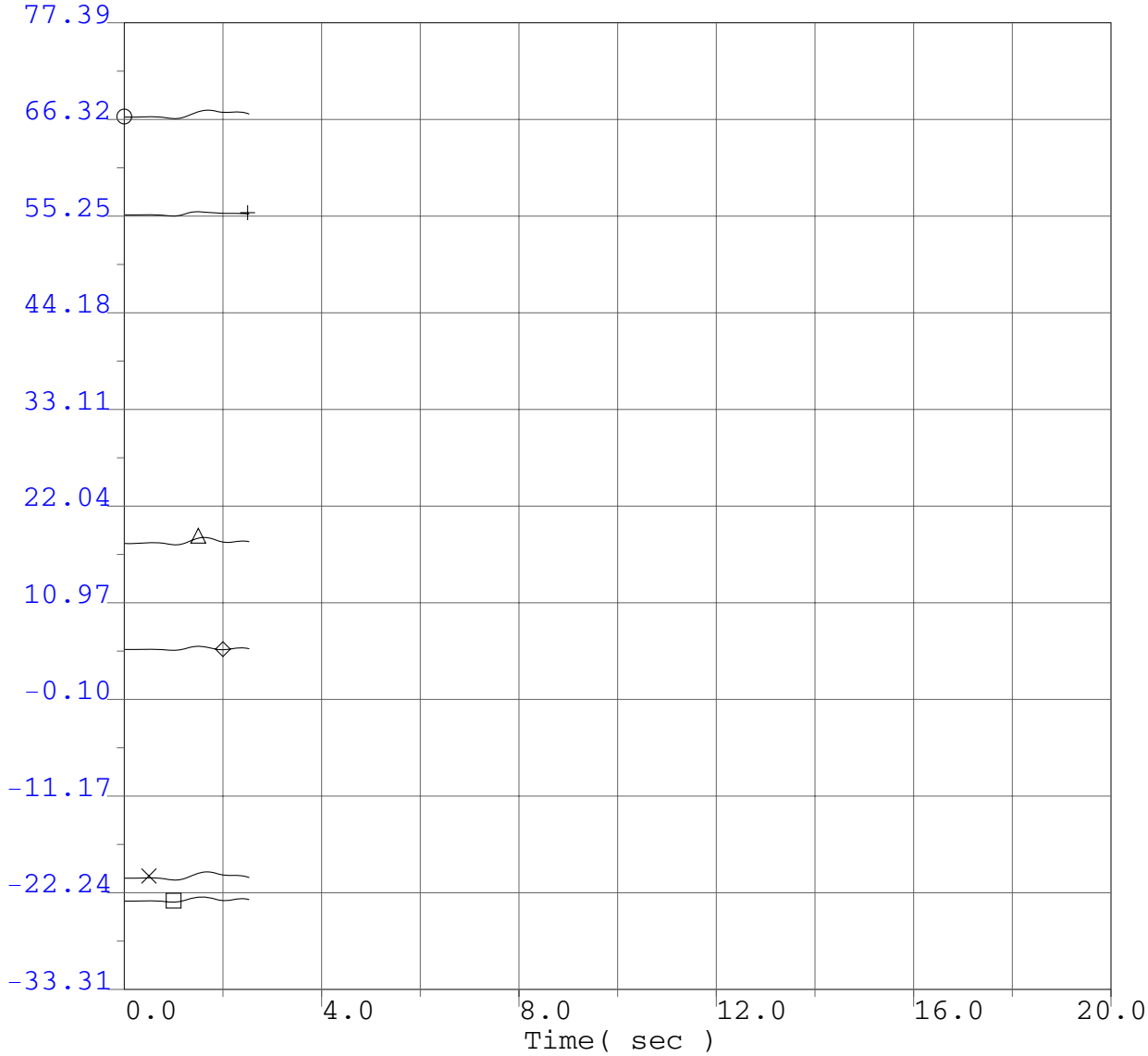

○	-33.31	ang	14914	FCNGN4CC	22.0	"H" 1	77.39
×	-33.31	ang	50500	GMS G6	13.8	"1" 1	77.39
□	-33.31	ang	60100	BRWNL 5	13.8	"1" 1	77.39
△	-33.31	ang	62048	COLSTP 3	26.0	"1" 1	77.39
◇	-33.31	ang	41701	JONDAY01	13.8	"1" 1	77.39
+	-33.31	ang	36411	DIABLO 1	25.0	"1" 1	77.39

P0411 Project System Impact Study
2008 Winter Peak Base Case
P0411 @ 166.4MW
Humboldt 115kV Bus outage
3 ph 17.4 cyc flt @ Humboldt 115kV bus & clr Humboldt 115kV bus

P0411 Project System Impact Study

WECC Generator Rotor Angle

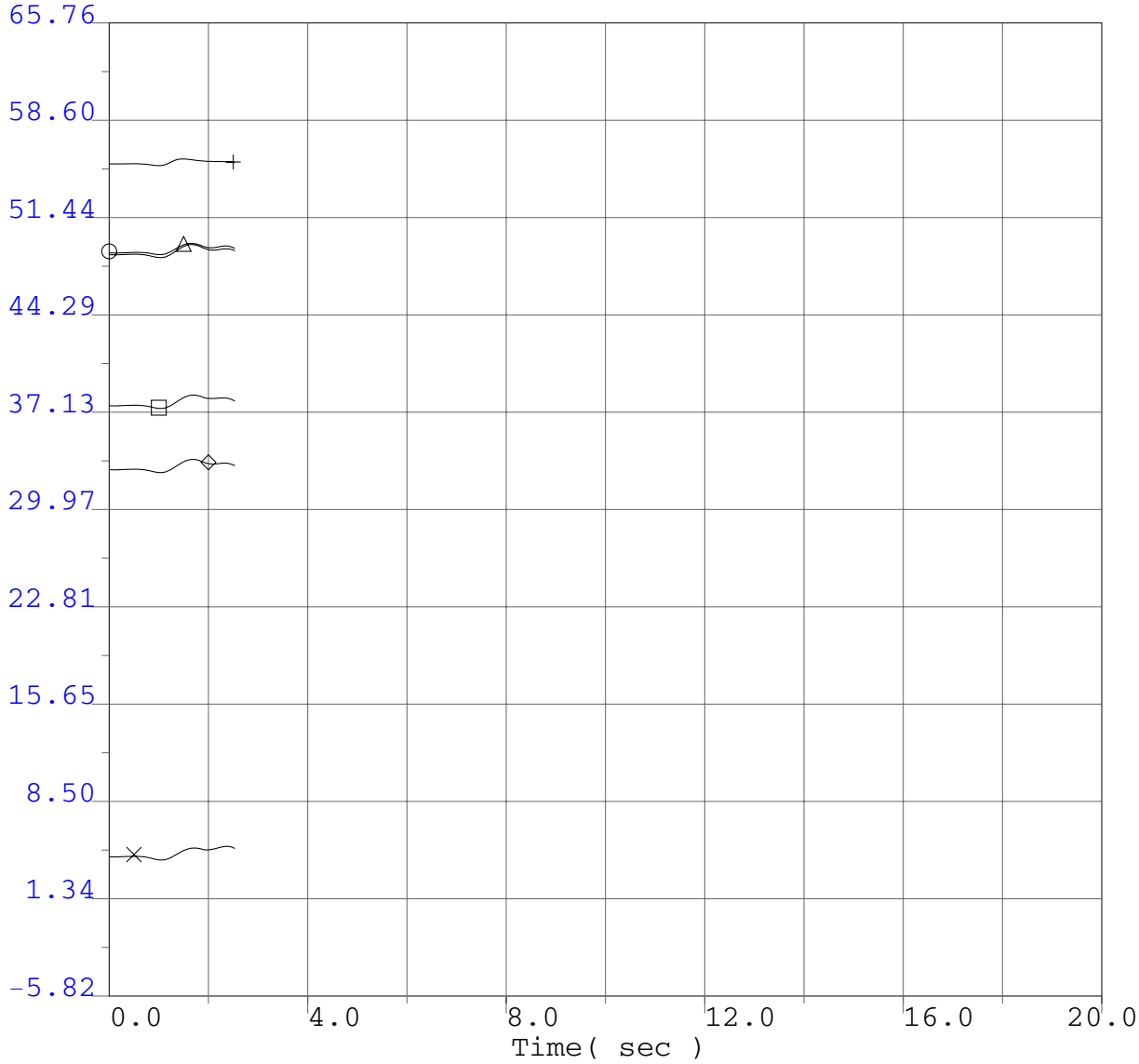

○	-5.82	ang	65490	EHUNTR 1	24.0	"1" 1	65.76
×	-5.82	ang	54280	SUND#2GN	18.0	"2" 1	65.76
□	-5.82	ang	79151	GLENC3-4	13.8	"3" 1	65.76
△	-5.82	ang	24130	S.ONOFR3	22.0	"3" 1	65.76
◇	-5.82	ang	22244	ENCINA 5	24.0	"1" 1	65.76
+	-5.82	ang	36411	DIABLO 1	25.0	"1" 1	65.76

P0411 Project System Impact Study
2008 Winter Peak Base Case
P0411 @ 166.4MW
Humboldt 115kV Bus outage
3 ph 17.4 cyc flt @ Humboldt 115kV bus & clr Humboldt 115kV bus

P0411 Project System Impact Study

Selected PG&E Transmission Line Flows (MW)

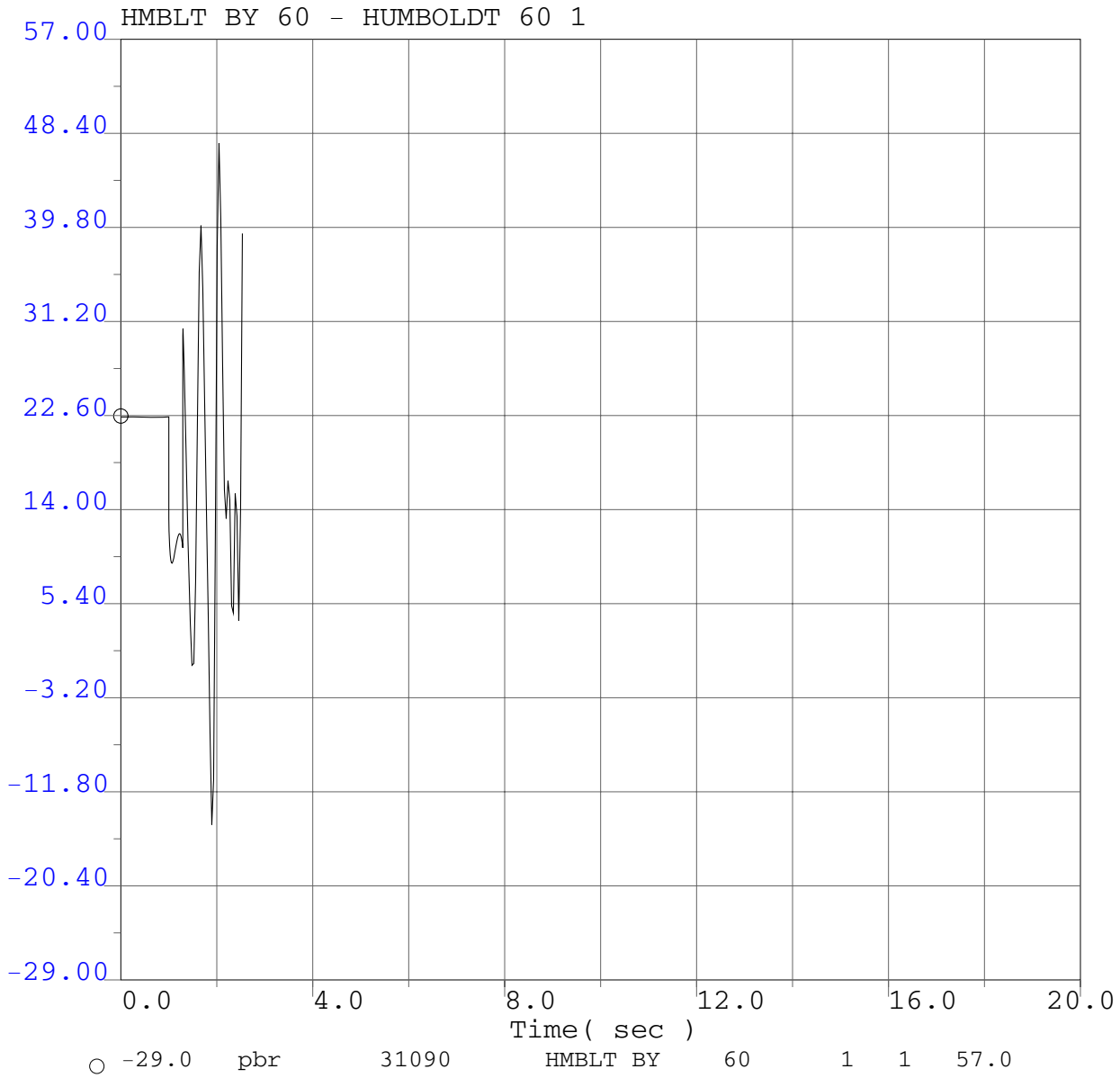

P0411 Project System Impact Study
2008 Winter Peak Base Case
P0411 @ 166.4MW
Humboldt 115kV Bus outage
3 ph 17.4 cyc flt @ Humboldt 115kV bus & clr Humboldt 115kV bus

P0411 Project System Impact Study

Selected PG&E Transmission Line Flows (MW)

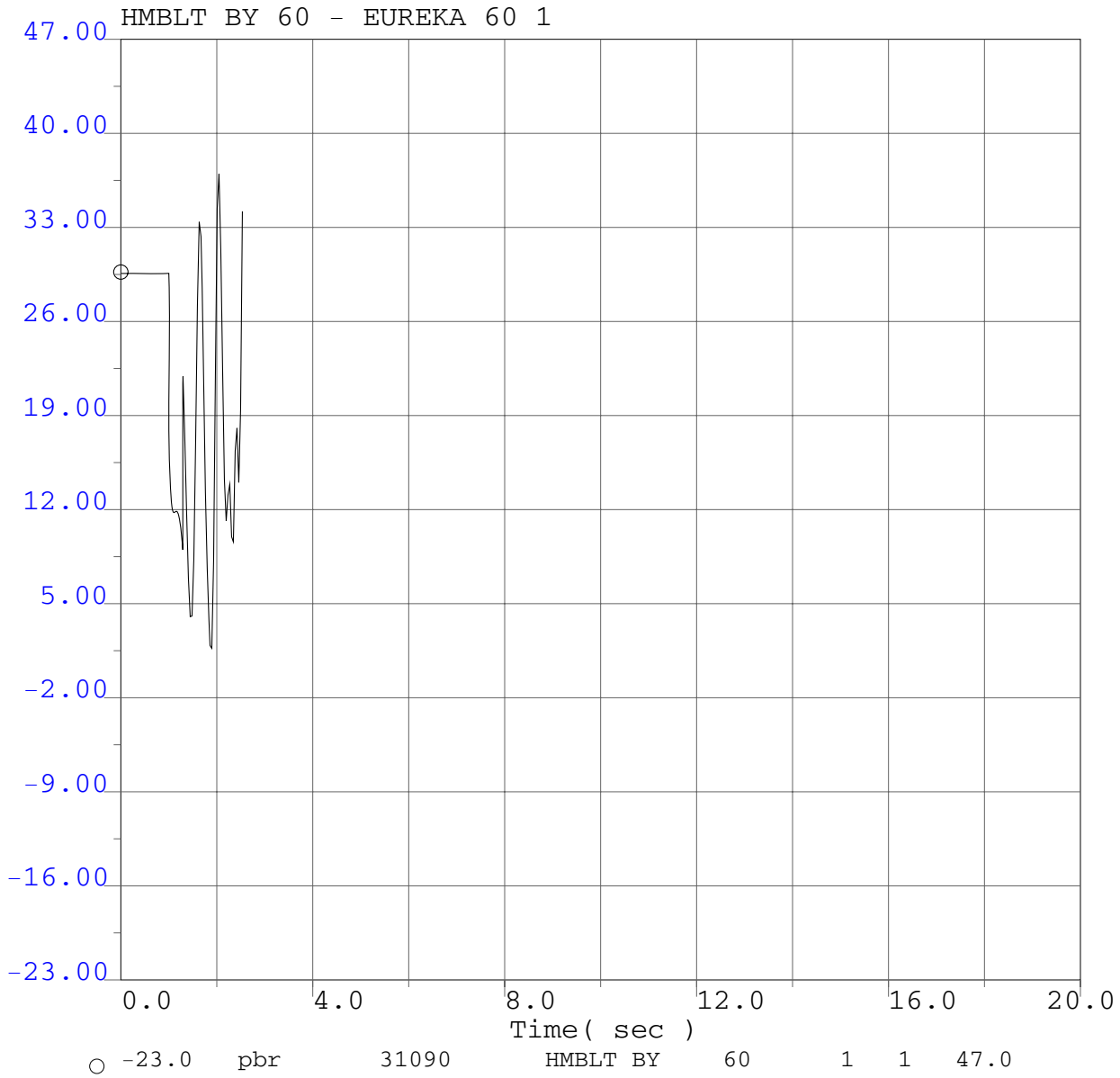

P0411 Project System Impact Study
2008 Winter Peak Base Case
P0411 @ 166.4MW
Humboldt 115kV Bus outage
3 ph 17.4 cyc flt @ Humboldt 115kV bus & clr Humboldt 115kV bus

P0411 Project System Impact Study

Selected PG&E Transmission Line Flows (MW)

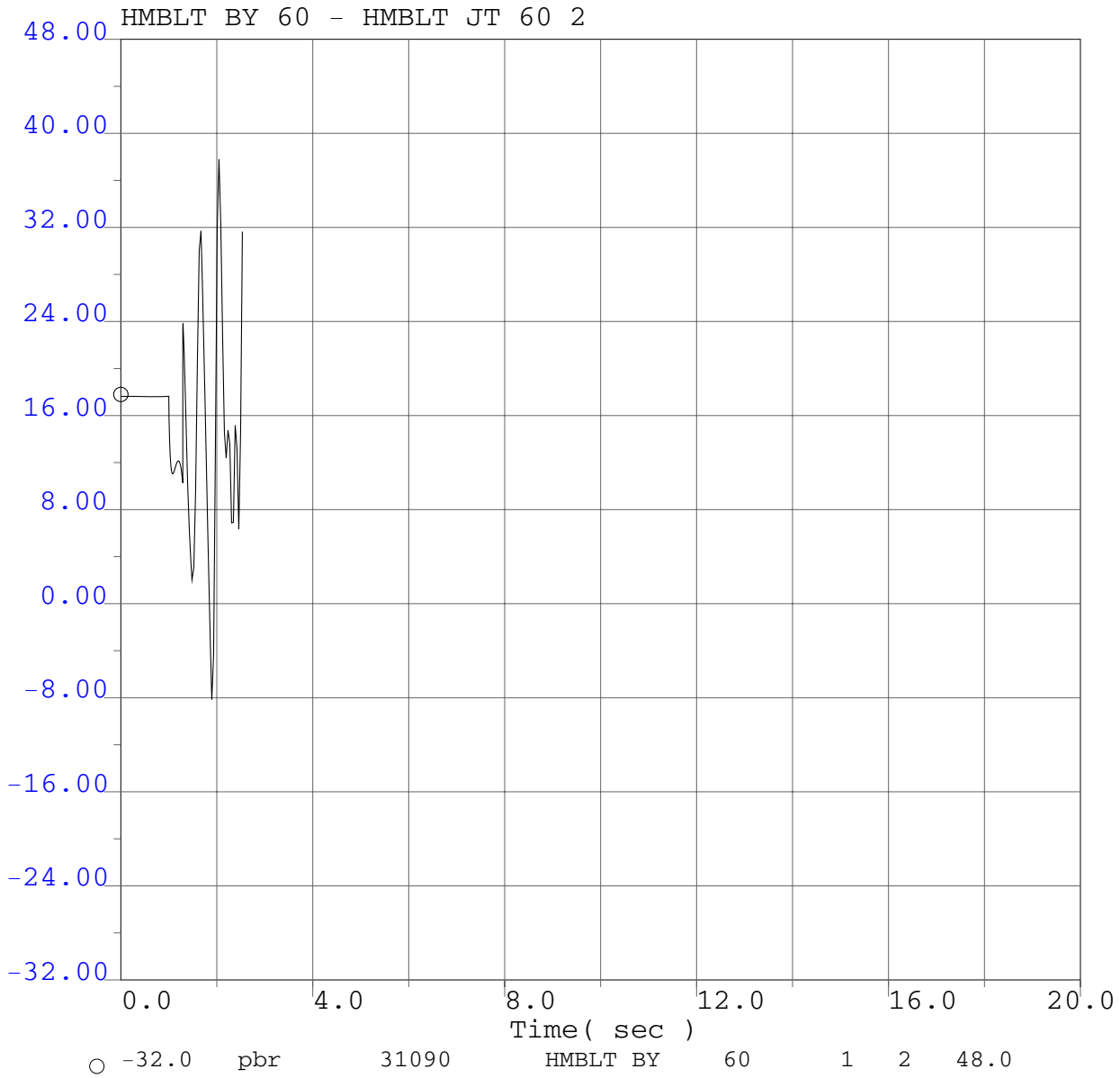

P0411 Project System Impact Study
2008 Winter Peak Base Case
P0411 @ 166.4MW
Humboldt 115kV Bus outage
3 ph 17.4 cyc flt @ Humboldt 115kV bus & clr Humboldt 115kV bus

P0411 Project System Impact Study

Selected PG&E Transmission Line Flows (MW)

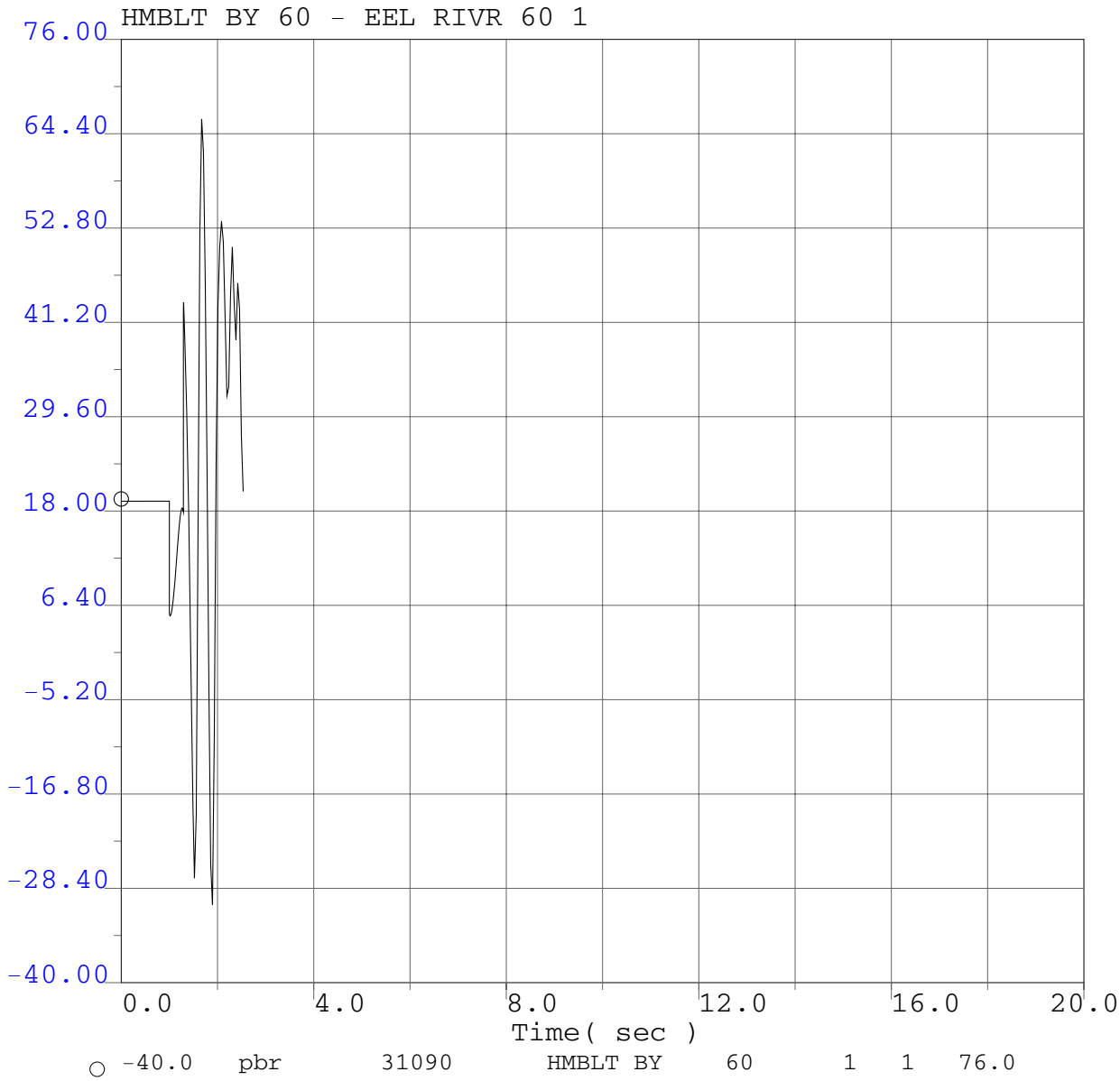

P0411 Project System Impact Study
2008 Winter Peak Base Case
P0411 @ 166.4MW
Humboldt 115kV Bus outage
3 ph 17.4 cyc flt @ Humboldt 115kV bus & clr Humboldt 115kV bus

P0411 Project System Impact Study

Selected PG&E Transmission Line Flows (MW)

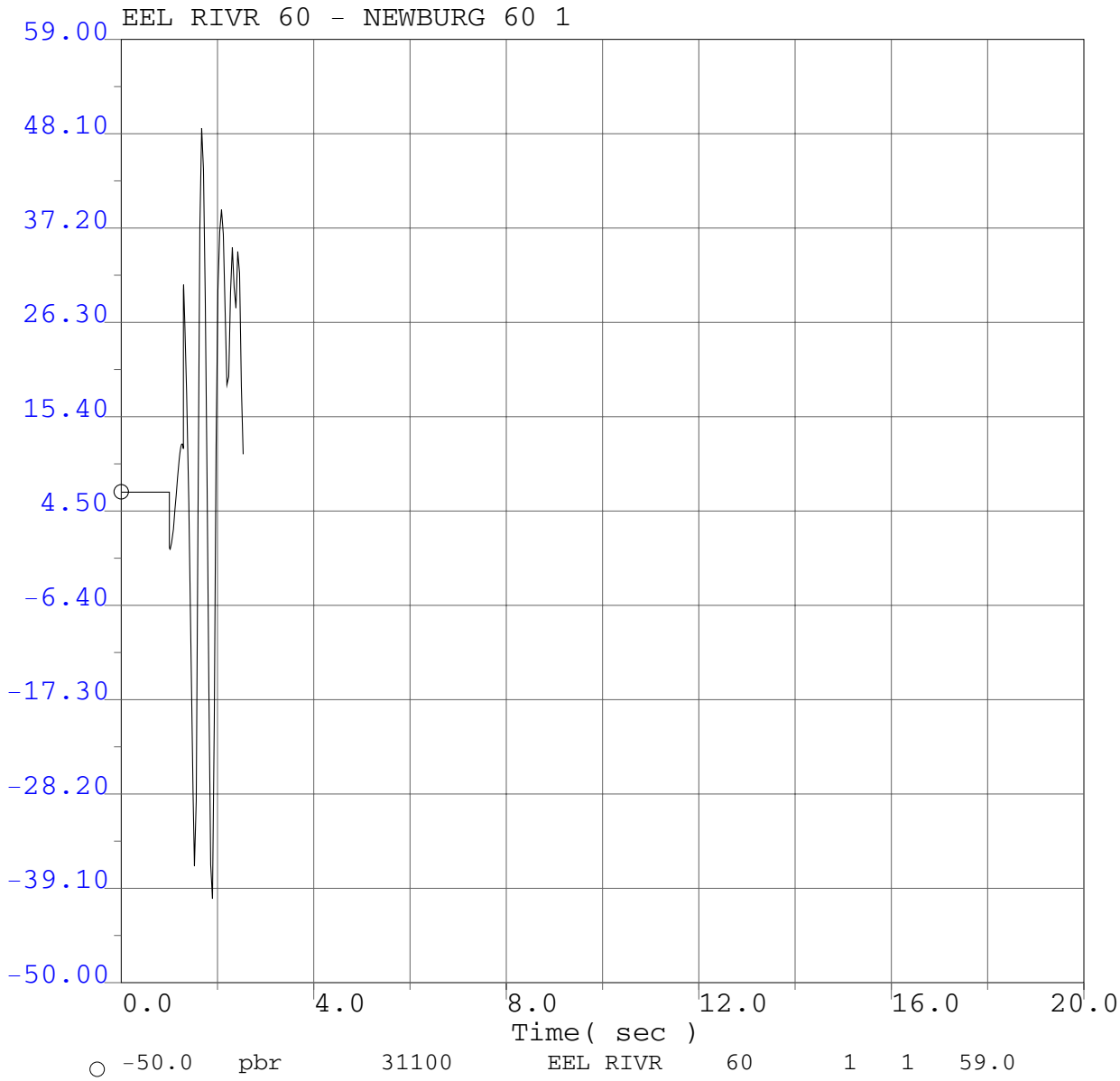

P0411 Project System Impact Study
2008 Winter Peak Base Case
P0411 @ 166.4MW
Humboldt 115kV Bus outage
3 ph 17.4 cyc flt @ Humboldt 115kV bus & clr Humboldt 115kV bus

P0411 Project System Impact Study

Selected PG&E Transmission Line Flows (MW)

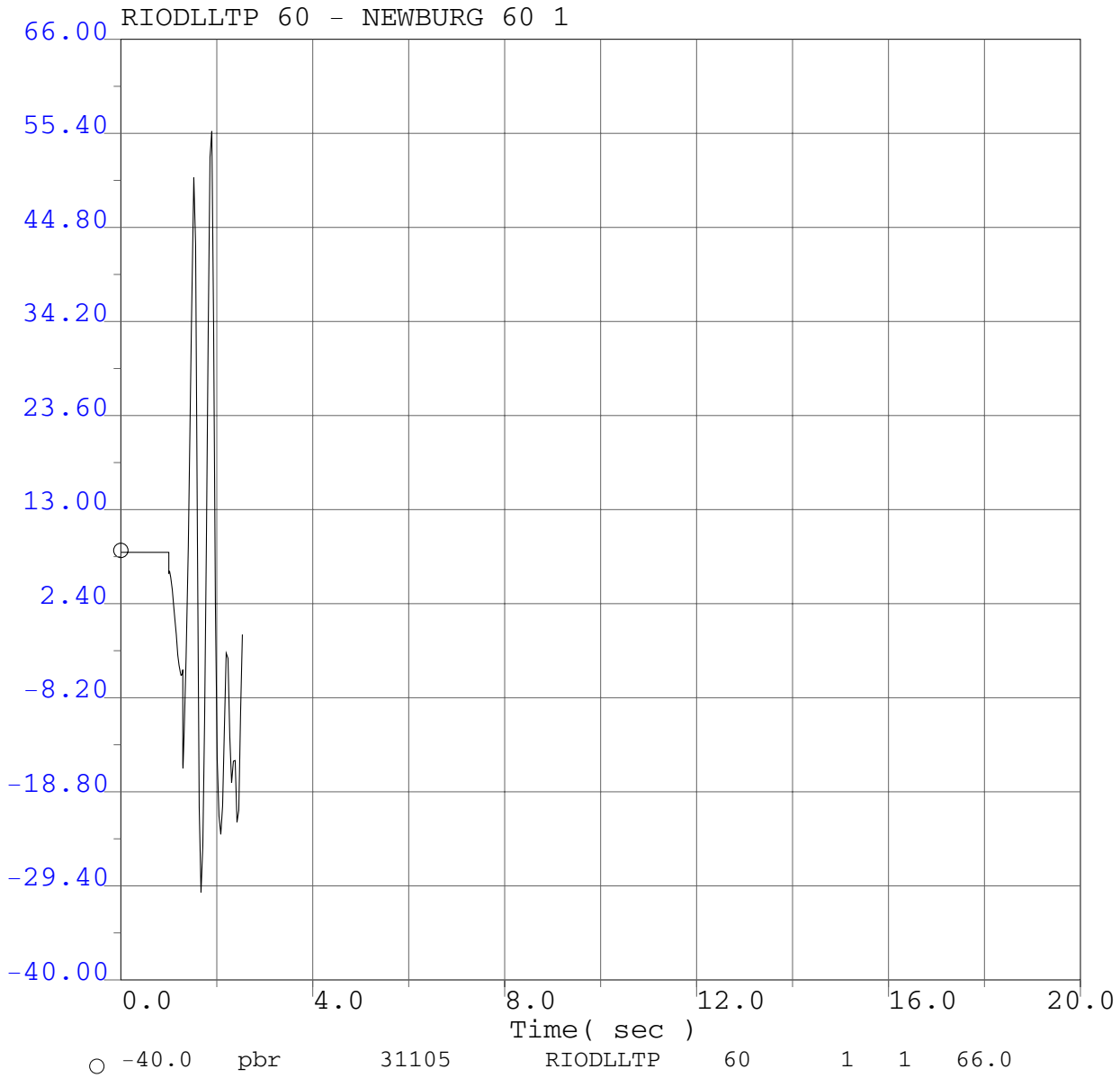

P0411 Project System Impact Study
2008 Winter Peak Base Case
P0411 @ 166.4MW
Humboldt 115kV Bus outage
3 ph 17.4 cyc flt @ Humboldt 115kV bus & clr Humboldt 115kV bus

P0411 Project System Impact Study

Selected PG&E Transmission Line Flows (MW)

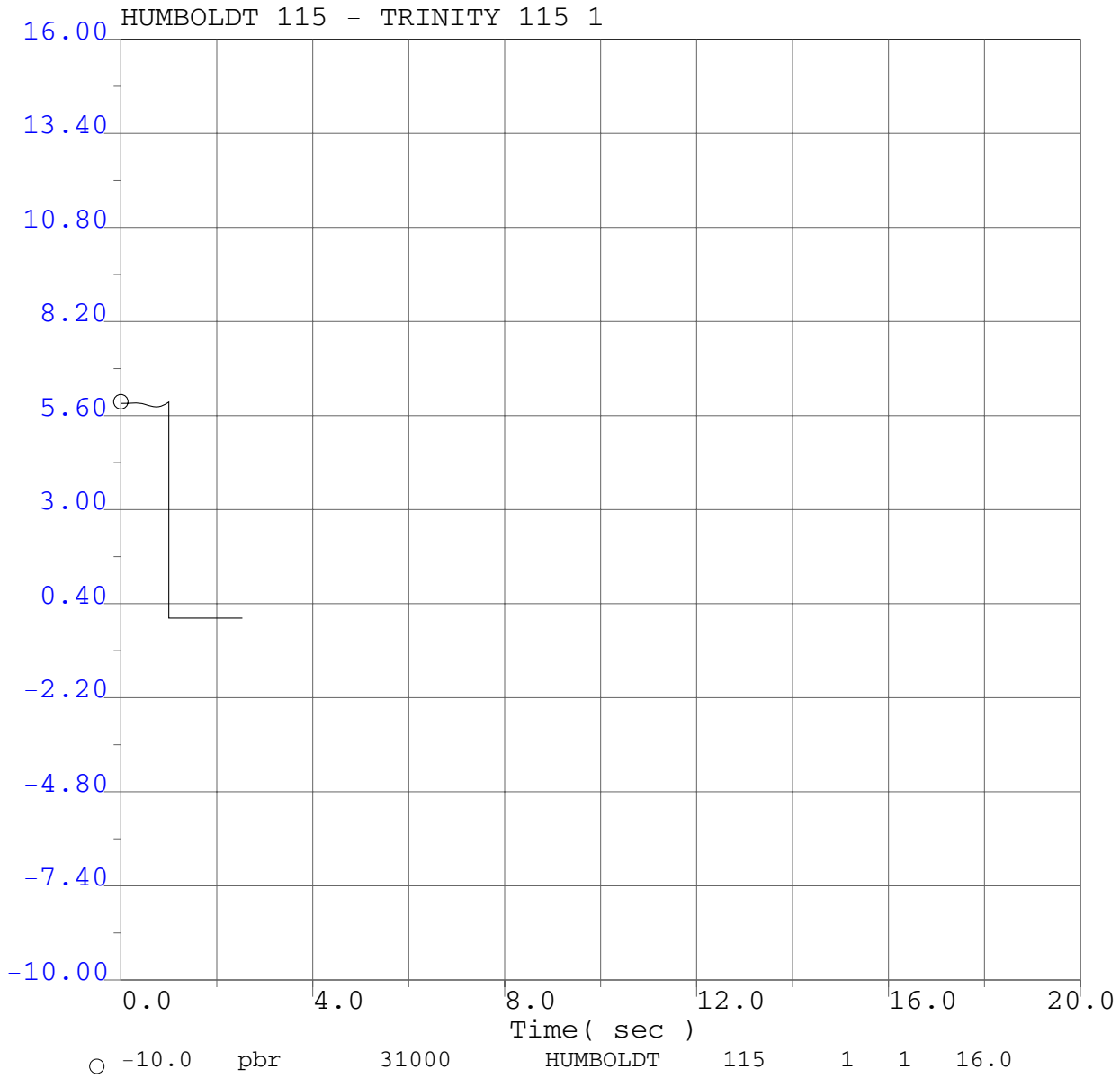

P0411 Project System Impact Study
2008 Winter Peak Base Case
P0411 @ 166.4MW
Humboldt 115kV Bus outage
3 ph 17.4 cyc flt @ Humboldt 115kV bus & clr Humboldt 115kV bus

P0411 Project System Impact Study

Selected PG&E Transmission Line Flows (MW)

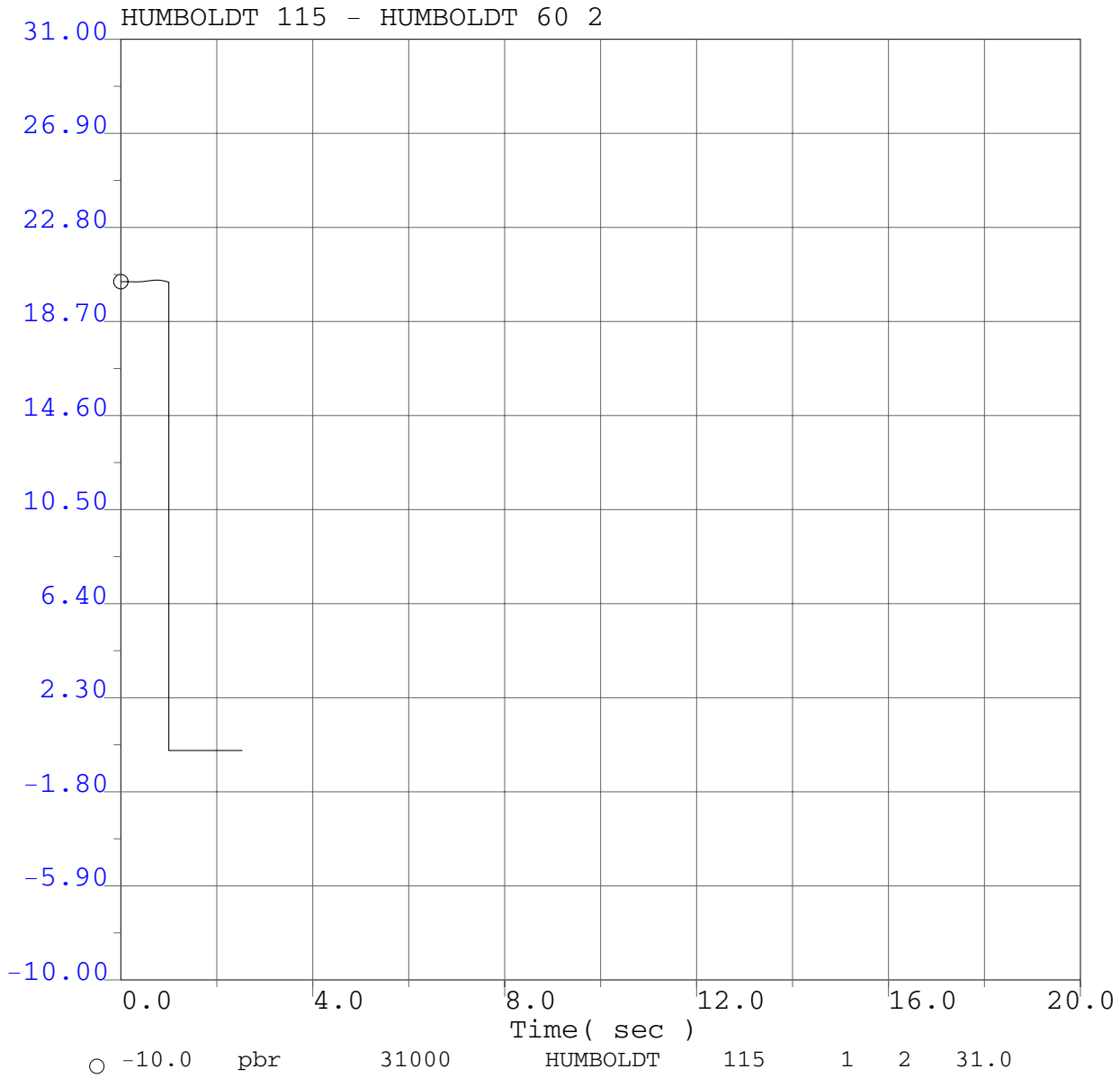

P0411 Project System Impact Study
2008 Winter Peak Base Case
P0411 @ 166.4MW
Humboldt 115kV Bus outage
3 ph 17.4 cyc flt @ Humboldt 115kV bus & clr Humboldt 115kV bus

P0411 Project System Impact Study

Selected PG&E Transmission Line Flows (MW)

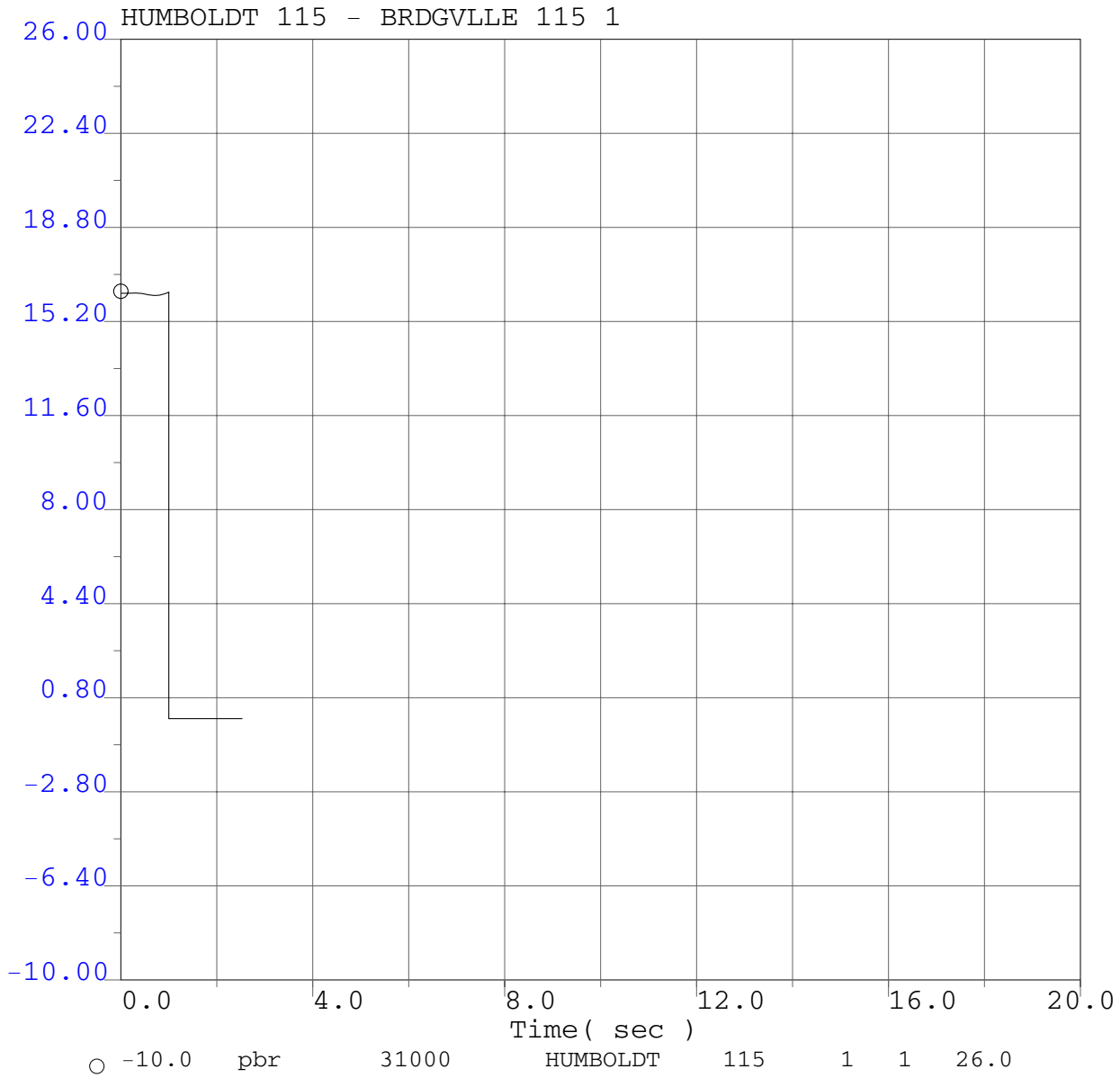

P0411 Project System Impact Study
2008 Winter Peak Base Case
P0411 @ 166.4MW
Humboldt 115kV Bus outage
3 ph 17.4 cyc flt @ Humboldt 115kV bus & clr Humboldt 115kV bus

P0411 Project System Impact Study

Selected PG&E Transmission Line Flows (MW)

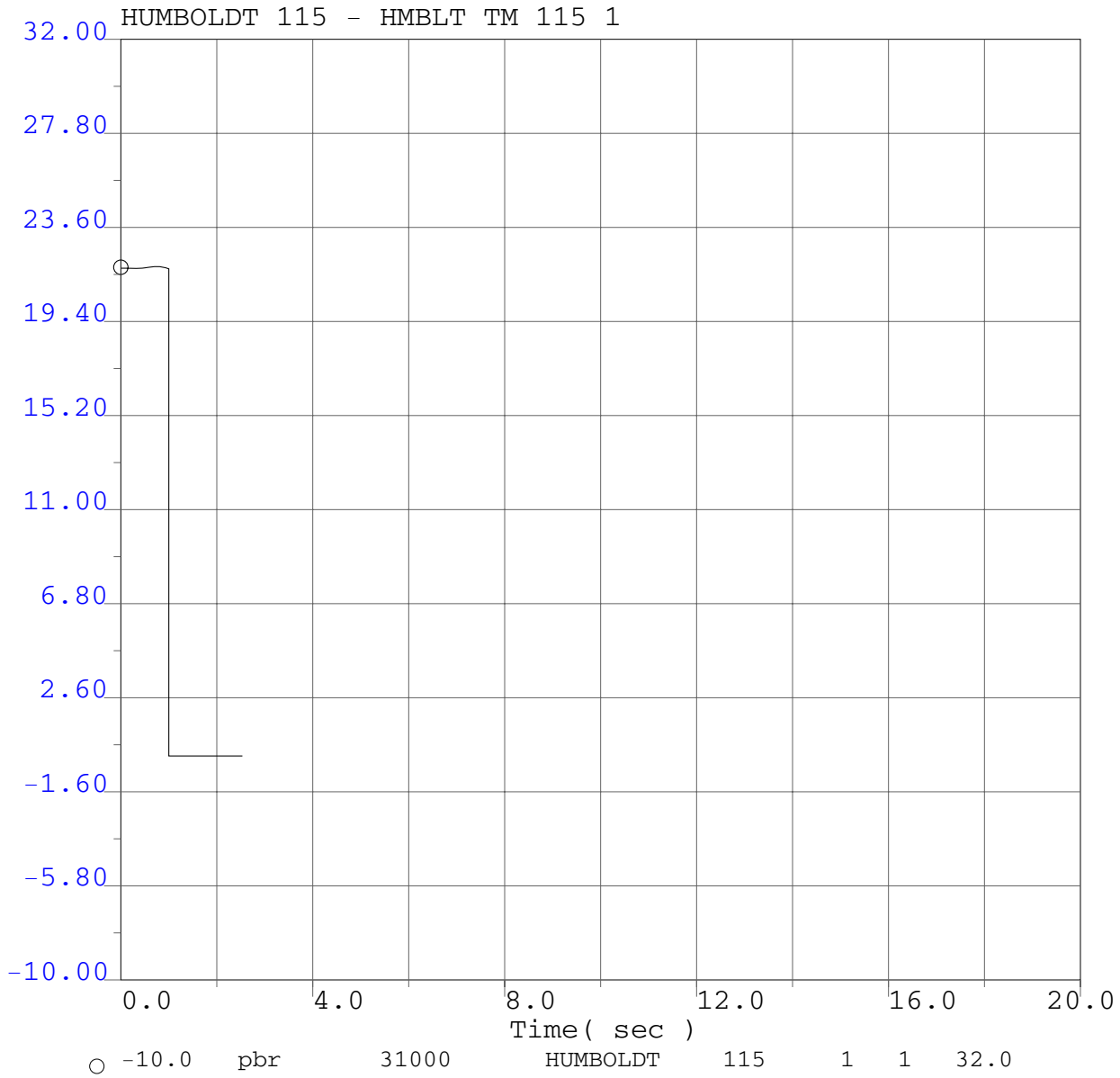

P0411 Project System Impact Study
2008 Winter Peak Base Case
P0411 @ 166.4MW
Humboldt 115kV Bus outage
3 ph 17.4 cyc flt @ Humboldt 115kV bus & clr Humboldt 115kV bus

Appendix G

Preliminary Protection Requirements

RAMCO GENERATION TWO, HUMBOLDT ENERGY FACILITY PROJECT

SYSTEM IMPACT STUDY

PRELIMINARY PROTECTION REQUIREMENTS

EDRO: AUGUST 2008

The following Preliminary Protection Requirements are for estimating purposes only for the Ramco II Humboldt Energy Facility Project. The actual relays specified in the final protection requirements may differ from those outlined in this document.

Per Section G2.1 of the PG&E Interconnection Handbook, PG&E protection requirements are designed and intended to protect PG&E's system only. Generation Entity is responsible for the protection of its own system and equipment and must meet the requirements in the PG&E Interconnection Handbook.

ASSUMPTIONS:

The Humboldt Energy Facility will consist of 10 reciprocating engine generators rated at 16.6 MW (maximum net output will be 166.38 MW) with a plant auxiliary load of 3.65 MW.

Six of the generators will be connected directly to the Humboldt Bay 60kV bus in place of existing Unit 1 and 2. Four generators will be connected to the Humboldt Bay – Humboldt #1 115kV line at PG&E's Humboldt Bay Power Plant Substation in place of existing MEPPS units.

The new 115kV terminal will require one 115kV breaker.

The new 60kV terminals will require two 60kV breakers.

These protection requirements will not cover special protection set-ups for temporary transmission line shoo-fly configurations that may be necessary to complete this project.

Line relays specified are per existing System Protection list of relays approved for purchase. Existing Engineering Design Standards are associated with application of these relays.

Relay coordination was not reviewed for this study. Recoordination studies could result in the required replacement of relays that are determined to be out of range as a result of this interconnection.

Study is based upon existing information available, any changes to the interconnection queue, connection point, or project information will result in a restudy of the area.

PROTECTION REQUIREMENTS

The Protection Requirements will consist of a non-pilot scheme on the Humboldt Bay – Humboldt 115kV line. Due to the addition of CB AA and CB BB, re-wiring of the existing bus differential protection for the Humboldt Bay 60kV will be required. The details are as follows:

HUMBOLDT ENERGY FACILITY

CB AA: Humboldt Energy Facility Generator 1 thru 3 – Connected at 60kV

CB AA: Install one-60kV SF6 circuit breaker with bushing CTs rated 1200/5 per PG&E specifications.

Wire Bank side CTs to existing Humboldt Bay Bus Differential, device 387B

CB BB: Humboldt Energy Facility Generator 4 thru 6 – Connected at 60kV

CB BB: Install one-60kV SF6 circuit breaker with bushing CTs rated 1200/5 per PG&E specifications.

Wire Bank side CTs to existing Humboldt Bay Bus Differential, device 387B

CB CCC: Humboldt Bay – Humboldt #1 115kV Line

Line Length: **Approx 6.3 miles**

CB CCC: Install one-115kV SF6 circuit breaker with bushing CTs rated 3000/5 per PG&E specifications.

Install required relaying as specified in the PG&E interconnection handbook per Section G2.1, note redundancy requirement for application of multifunction relays.

PG&E recommends installing directional relays in order to provide accurate fault location and to prevent delays in restoration of the generation facility for faults on the tie line and within the facility.