URS

DOCKET	
08-AFC-8	
DATE	OCT 19 2009
RECD.	OCT 28 2009

October 19, 2009

Rod Jones
Project Manager
California Energy Commission
1516 Ninth Street
Sacramento, CA 95814

RE: Hydrogen Energy California Revised AFC
CEC Docket No. 08-AFC-8

On behalf of Hydrogen Energy International LLC, the applicant for the Hydrogen Energy California Revised AFC, we are pleased to submit the enclosed documents:

- One print copy of the October 2009 Amendment to Prevention of Significant Deterioration Permit Application, and a DVD containing revised air quality modeling files, which were submitted to the US Environmental Protection Agency on October 7, 2009;
- One print copy of the October 2009 Amendment to the Authority to Construct Permit Application, and a DVD containing revised air quality and public health modeling files, which were submitted to the San Joaquin Valley Air Pollution Control District on October 7, 2009.

URS Corporation

Dale Shileikis
Vice President, Project Manager

Enclosures

cc: Greg Skannal, HEI, w/out enclosure

URS Corporation
221 Main Street, Suite 600
San Francisco, CA 94105
Tel: 415.869.5858
Fax: 415.882.9261
www.urscorp.com

J:\HECA-2\ATC_PSD\Transmittal_RJones_19 Oct 2009.doc

hydrogen energy

October 7, 2009

Leonard Scandura
Permit Services Manager
San Joaquin Valley Air Pollution Control District
Southern Regional Office
34946 Flyover Court
Bakersfield, CA 93308

Subject: **Submittal of Amendment to the Application for Authority to Construct – Hydrogen Energy California SJVAPCD Project S-1093741**

Dear Mr. Scandura:

Hydrogen Energy International LLC (HEI) proposes to modify the nominally rated 250 (approximate) net megawatt (MW) integrated gasification combined cycle power generation unit proposed at a greenfield site in Kern County, California. The attached document is an Amendment to the Authority to Construct / Permit to Operate Application to the San Joaquin Valley Air Pollution Control District (SJVAPCD) for the "HECA" project.

The Applicant is modifying the Project to eliminate the auxiliary combustion turbine generator (CTG) and demonstrate its emissions of particulates less than 2.5 microns in diameter ($PM_{2.5}$) will be below the 100 tons per year (tpy) $PM_{2.5}$ Air Quality Standard threshold.

An Amendment to the Revised Application for Certification for this unit was filed with the California Energy Commission dated September 2009 (Docket # 08-AFC-8). An Amendment to the Prevention of Significant Deterioration (PSD) application will be filed with the Environmental Protection Agency, Region IX.

The enclosed application amendment includes supporting information, as well as a DVD containing electronic copies of revised air quality and public health modeling input and output files. Please contact Gregory Skannal, HEI at (562) 276-1511 or Mark Strehlow at (510) 874-3055 if you have any questions or require additional information.

One World Trade Center, Suite 1600, Long Beach, CA 90831-1600 Main (+1) 562-276-1543 Fax (+1) 562-276-1571 www.hydrogenenergy.com

Sincerely,

Gregory D. Skannal
Manager, HSSE
Hydrogen Energy International LLC

Attachment: Application

Copy: Mark Strehlow, URS
California Energy Commission

Amendment to the Authority to Construct (ATC) Permit Application (08-AFC-8)

for

HYDROGEN ENERGY CALIFORNIA

Kern County, California

Prepared for:
Hydrogen Energy International LLC

hydrogen energy

Submitted to:
California Energy Commission

Prepared by:

URS

October 2009

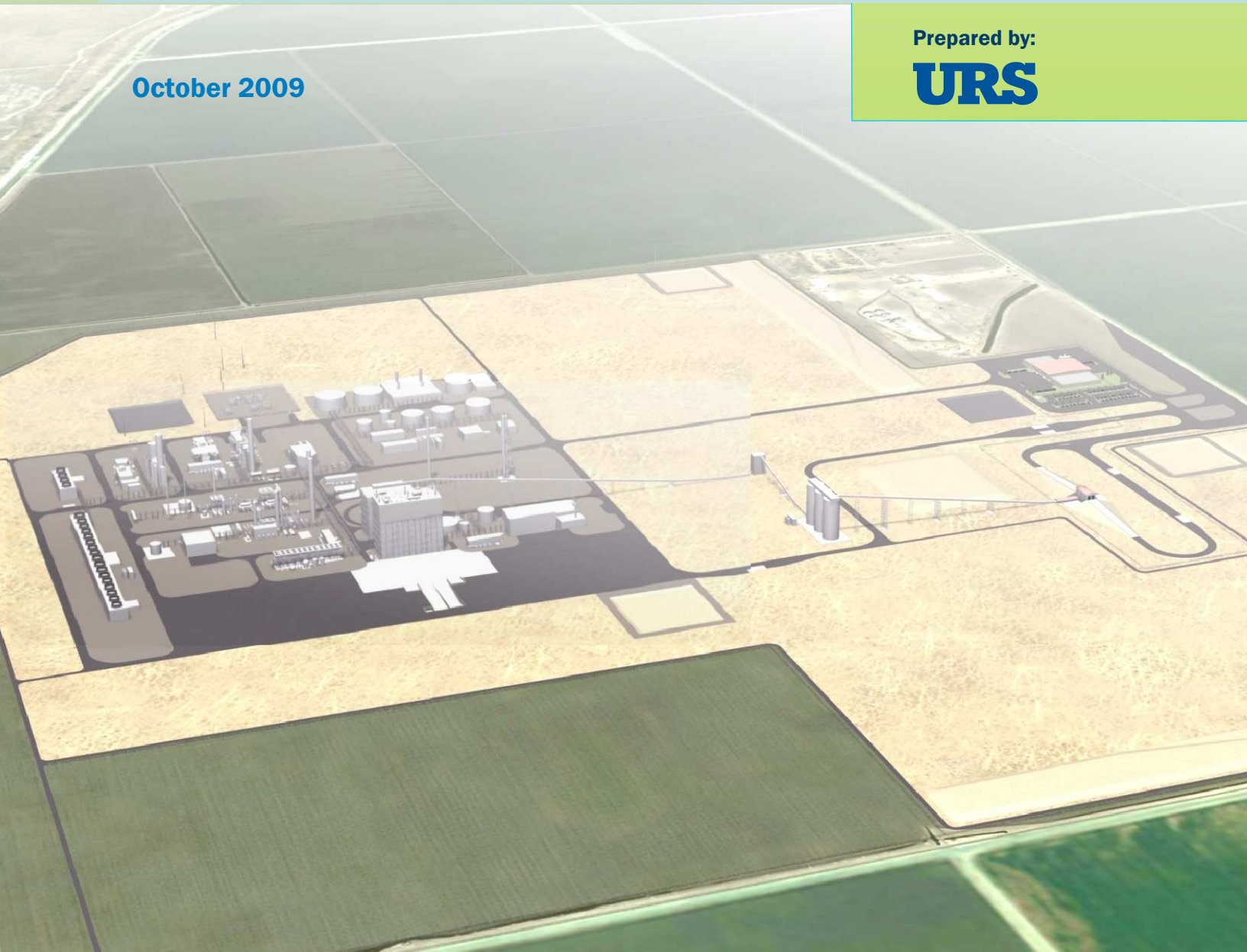

TABLE OF CONTENTS

Section 1 Introduction 1-1

1.1 Overview 1-1

Section 2 Project Description 2-1

2.1 Equipment 2-1

Section 3 Equipment Specifications 3-1

3.1 Equipment List 3-1

Section 4 Expected Emissions 4-1

Section 5 Laws, Ordinances, and Regulations 5-1

Section 6 Emission Offsets 6-1

Section 7 Ambient Air Quality and PSD Analysis 7-1

7.1 Air Dispersion Modeling 7-1
7.2 Compliance with Ambient Air Quality Standards and PSD Requirements 7-4
7.2.1 Impacts on Air Quality Related Values in Class I Area 7-8

Section 8 Health Risk Assessment 8-1

Tables

Revised Table 2-1 Representative Heat and Material Balances

Revised Table 4-1 Total Combined Annual Criteria Pollutant Emissions

Revised Table 4-4 CTG/HSRG Criteria Pollutant Emission Rates during Startup and Shutdown

Revised Table 4-5 Criteria Pollutant Sources and Emission Totals for the Worst Case CTG Emissions Scenario for All Averaging Times

Revised Table 4-6 Average Annual Emissions per Turbine Operating Scenario

Revised Table 6-1 HECA Annual Operating Emissions

Revised Table 6-2 Estimated ERCS Required

Revised Table 7-4 AERMOD Modeling Results for Project Operations (All Project Sources Combined)

Revised Table 7-6 PSD Class I Increment Significance Analysis – CALPUFF Results

Revised Table 7-7 Visibility Analysis – CALPUFF Results

Revised Table 7-8 Total Nitrogen and Sulfur Deposit Analysis – CALPUFF Results

Figures

Revised Figure 1-3 Preliminary Plot Plan

Revised Figure 2-1 Overall Block Flow Diagram

Revised Figure 2-8 Flow Diagram Power Block Systems

Revised Figure 2-9 Flow Diagram Natural Gas System

Revised Figure 7-3 Locations of Maximum Predicted Ground Level Pollutant Concentrations for the Operational Project Area

Appendices

Revised Appendix C3 Revised HECA Downwash Structures

Revised Appendix C4 Revised CALMET/CALPUFF Air Quality Modeling Results

Revised Appendix D1.2 Revised Operating Emissions Stationary Sources

On June 26, 2009, Hydrogen Energy International LLC (HEI) filed an Authority to Construct (ATC) application with the San Joaquin Valley Air Pollution Control District (SJVAPCD) seeking approval to construct and operate the Hydrogen Energy California Project (HECA or Project). The Applicant is modifying the Project to eliminate the auxiliary combustion turbine generator (CTG) and demonstrate its emissions of particulates less than 2.5 microns in diameter ($PM_{2.5}$) will be below the 100 tons per year (tpy) $PM_{2.5}$ Air Quality Standard threshold.

This Amendment provides a detailed discussion of the design modification and revisions to the filed ATC application needed to address this change. The elimination of the auxiliary CTG and reduction in emissions rates do not fundamentally alter the nature of the project, nor do they affect the proposed capture and sequestration of Project carbon emissions.

1.1 OVERVIEW

This submittal describes the Amendment and analyzes whether or not the modification results in any environmental consequences not previously analyzed. As demonstrated, the elimination of the auxiliary CTG will not increase the magnitude of any previously identified environmental impacts, or result in any new significant impacts associated with the Project. The emissions of all criteria pollutants and greenhouse gases (GHG) are reduced as a result of this Project modification. Further, the AERMOD and CALPUFF air modeling results demonstrate that the Project modification reduces criteria pollutant and visibility impacts. Therefore, all impacts are expected to remain less than significant with the Project modification.

This modification is within the 473-acre Project Site and does not result in any additional disturbed areas beyond the Site not previously evaluated. In addition, the modification is not expected to result in any significant changes to the schedule, costs, workforce, or traffic during construction or operations.

This Amendment presents information that has changed as a result of the Project modification. Tables and figures that have been changed as a result of this modification are included in this Amendment with the original table number, but prefaced with “Revised.”

2.1 EQUIPMENT

The Project modification consists of eliminating the auxiliary CTG General Electric (GE) LMS100® and reducing the emission rates for particulate matter less than 10 microns in diameter (PM_{10}) and particulate matter less than 2.5 microns in diameter ($PM_{2.5}$) from the GE Frame 7B CTG)/Heat Recovery Steam Generator (HRSG) when firing hydrogen–rich fuel. Therefore, all references in the filed ATC application to the following are no longer applicable: "auxiliary CTG," "peaking power," auxiliary combustion turbine generator," "GE LMS100®," "CTG-2," "auxiliary Simple Cycle Gas Turbine," "auxiliary Simple Cycle CTG," and "turbines."

The Project would still produce about 250 megawatts (MW) of baseload power and 390 gross MW from the combined cycle plant that is fed by the Gasification Block and would still require two conventional mechanical-draft cooling towers.

The Project modification is reflected in the following revised Project Description figures, which are included in this Amendment:

- Revised Figure 1-3: Preliminary Plot Plan
- Revised Figure 2-1: Overall Block Flow Diagram
- Revised Figure 2-8: Flow Diagram Power Block Systems
- Revised Figure 2-9: Flow Diagram Natural Gas System

The following Project Description tables have been revised to reflect the Project modification, and are included in this Amendment:

Revised Table 2-1: Representative Heat and Material Balances

Revised Table 2-1 Representative Heat and Material Balances

Operating Case:	IGCC PG7321 (FB) Hydrogen-Rich Gas from: 100% Petcoke	IGCC PG7321 (FB) Hydrogen-Rich Gas from: 75 % Coal/ 25 % Petcoke Blend[3]	Combined Cycle PG7321 (FB) Natural Gas		
Ambient Temperature, °F	65 [1]	65 [1]	20	65	115
Feeds:					
Feedstock, stpd (AR)	2,820	3,197	0	0	0
Feedstock, MMBtu/hr [HHV]	3,240	3,255	0	0	0
Fluxant, stpd	60	32	0	0	0
Natural Gas, MMBtu/hr [HHV]	0	0	2,560	2,410	2,310
Water, gpm	2,900	2,810	1,080	1,450	2,130
Products and By-Products:					
Hydrogen, mmscfd [2]	177	177	0	0	0
Carbon Dioxide, stpd	7,400	7,300	0	0	0
Sulfur, stpd	130	40	0	0	0
Gasification Solids, stpd (wet)	140	470	0	0	0
Power Balance:					
Combustion Turbine, MW	232	232	201	183	169
Steam Turbine, MW	160	156	148	146	142
H_2-Rich Fuel Expander, MW	2	2	0	0	0
Gross Power, MW	394	390	349	329	311
Total Auxiliary Load, MW	143	142	16	18	18
Air Separation Unit, MW	74	75	0	0	0
CO_2 Compression, MW	27	27	0	0	0
Other Internal Users, MW	42	40	16	18	18
Net Power, MW	251	248	333	311	293

Source: HECA Project

Notes:

[1] Ambient temperature variations have minimal effect on hydrogen-rich gas fueled combustion turbine generator output and gasification operation. Results are nearly constant for plant output across the ambient temperature range.

[2] Hydrogen contained in the hydrogen-rich gas used to fuel power generation equipment.

[3] Percentage is by thermal input (HHV basis)

AR = as received
°F = degrees Fahrenheit
gpm = gallons per minute
HHV = higher heating value
IGCC = integrated gasification combined cycle
MMBtu/hr = million British thermal units per hour
mmscfd = million standard cubic feet per day
MW = megawatt
stpd = short tons per day

3.1 EQUIPMENT LIST

This section summarizes specifications regarding the following criteria pollutant emitting equipment comprising the Project.

Source #	Source Description
1	Air Separation Unit Cooling Tower: 40,000 gallons per minute Multi-cell Mechanical-draft Cooling Towers with high efficiency drift eliminators; serving the Air Separation Unit.
2	Power Block Cooling Tower: 175,000 gallons per minute Multi-cell Mechanical-draft Cooling Towers with high efficiency drift eliminators; serving the power block
3	Gasification Cooling Tower: 42,000 gallons per minute Multi-cell Mechanical-draft Cooling Towers with high efficiency drift eliminators; serving the Air Separation Unit.
4	Standby Diesel Generator 1: 60 Hz, 3-Phase, 2,000 kW, 0.8 PF standby diesel fueled emergency generator
5	Standby Diesel Generator 2: 60 Hz, 3-Phase, 2,000 kW, 0.8 PF standby diesel fueled emergency generator
6	Combined-cycle Combustion Turbine (CTG/HRSG): The main power block unit consists of a Hydrogen-rich fuel and/or Natural Gas-fired General Electric (GE) 7FB Combustion Turbine Generator (CTG) with a Heat Recovery Steam Generators (HRSG) and one condensing Steam Turbine-Generator (STG) operating in combined cycle mode. The HRSG includes a duct burner, a selective catalytic reduction (SCR) system, and a carbon monoxide catalyst system.
7	Firewater Pump: a 600 hp, 415 kW diesel fueled standby firewater pump.
8	Auxiliary Boiler: a 142 MMBTU/hour natural gas fired boiler equipped with low nitrogen oxide burners and flue gas recirculation; with maximum steam production of 100,000 pounds per hour.
9	Sulfur Recovery System: A sulfur recovery system consists of a Sulfur Recovery Unit (SRU), a Tail Gas Treatment Unit (TGTU), and a tail gas thermal oxidizer (10 MMBtu/hr).
10	CO2 Vent: Alternative (intermittent, infrequent) venting system serving the release stream of CO_2 from the Acid Gas Removal Unit and the Tail gas Treatment Unit.
11	Gasification Flare: Elevated flare with 0.5 MMBtu/hr natural gas pilot.
12	SRU Flare: Elevated flare with 0.3 MMBtu/hr natural gas pilot and 36 MMBtu/hr natural gas assist.
13	Rectisol Flare: Elevated flare with 0.3 MMBtu/hr natural gas pilot.
14	Gasifier Refractory Heater 1: 18 MMBtu/hr refractory heater serving the gasification block.
15	Gasifier Refractory Heater 2: 18 MMBtu/hr refractory heater serving the gasification block.
16	Gasifier Refractory Heater 3: 18 MMBtu/hr refractory heater serving the gasification block.
17	Feedstock Handling System: Series of enclosed conveyors, feedstock storage silos, and feedstock preparation buildings equipped with six dust collection system consisting of hoods and baghouses.

The Project is a nominal 250 net MW IGCC power generating facility consisting of a Gasification Block and hydrogen-rich fuel production unit with carbon capture capability and a combined-cycle power block. The operational emissions from the Project are mainly generated from the combustion of the hydrogen-rich fuel. Other emission sources include cooling towers, solids handling, and an auxiliary boiler.

This Amendment addresses changes to the emission rates from the GE Frame 7B CTG/HRSG as a result of a refinement of the PM_{10} and $PM_{2.5}$ emission factors. The updated emission rates are presented in Revised Table 4-1, Total Combined Annual Criteria Pollutant Emissions. There will be no changes to emission rates from other equipment, and therefore they are not discussed in this section.

Power Block CTG/HRSG Operating Emissions

The most significant emission source of the Project will be the CTG/HRSG train. The power block design will be optimized for performance on 100 percent hydrogen-rich fuel, 100 percent natural gas, or co-firing hydrogen-rich fuel and natural gas. Most of the hydrogen-rich fuel from the gasification plant will be used to fully load the CTG, with any excess (up to about 10 to 14 percent) duct fired in the HRSG. The CTG will operate on hydrogen-rich fuel, natural gas, or a mixture of the two (45 to 90 percent hydrogen-rich fuel) over the compliance load range of 60 to 100 percent. The CTG may be co-fired with natural gas as required to maintain emission-compliant operation if the quantity of hydrogen-rich fuel is insufficient or hydrogen-rich fuel is completely unavailable.

Maximum short-term operational emissions from the CTG/HRSG were determined from a comparative evaluation of potential emissions corresponding to normal operating conditions (including HRSG duct-firing), and CTG startup/shutdown conditions. The long-term operational emissions from the CTG/HRSG were estimated by summing the emissions contributions from normal operating conditions (including hours with and without duct-firing) and CTG/HRSG startup/shutdown conditions.

Operational emissions from the CTG/HRSG were estimated for all the applicable scenarios using base emission rates and startup/shutdown emissions. The base criteria pollutant emission rates provided by the turbine vendor and the engineer for three load conditions (60, 80, and 100 percent) and three ambient temperatures (20, 65, and 97 degrees Fahrenheit [ºF]) when firing natural gas, hydrogen-rich fuel, or co-firing are presented in Revised Table 4-3, 1-Hour Operating Emission Rates for CTG/HRSG Operating Load Scenarios. The revision to the PM_{10} and $PM_{2.5}$ emissions rates from the CTG/HRSG when firing hydrogen-rich fuel due to a refinement of the PM_{10} and $PM_{2.5}$ emission factor are presented in Revised Table 4-3.

CTG/HRSG Startup and Shutdown Emissions

The expected emissions and durations associated with CTG/HRSG startup and shutdown events are summarized in Revised Table 4-4, CTG/HRSG Criteria Pollutant Emission Rates during Startup and Shutdown. No changes to the startup and shutdown times result from this Amendment. However, there will be a revision to the PM_{10} and $PM_{2.5}$ emission rates during cold startup and hot startup scenarios due to a refinement of the PM_{10} and $PM_{2.5}$ emission factor.

CTG/HRSG Emissions Scenarios for Modeling

Reasonable worst-case short-term emissions from the turbines were calculated for use in the air quality modeling. These scenarios form the basis for the air dispersion modeling analyses presented in Section 7.

Revised Table 4-5, Criteria Pollutant Sources and Emission Totals for the Worst-Case CTG Emissions Scenario for All Averaging Times, summarizes the worst-case emissions scenarios adopted to assess maximum impacts to air quality and air quality-related values in the modeling analyses presented in Section 7.

Estimated annual emission totals for all pollutants incorporate the maximum anticipated emissions related to startups and shutdowns, as well as the maximum steady-state operating emissions with and without duct firing. Estimated maximum annual emissions for the GE 7FB turbine are presented in Revised Table 4-6, Average Annual Emissions per Turbine Operating Scenario. Detailed emissions calculations for all scenarios, including revisions, are included in Revised Appendix D1.2.

Revised Table 4-1 Total Combined Annual Criteria Pollutant Emissions

Pollutant	Total Annual (ton/yr)	HRSG Stack Maximum (1) (ton/yr)	Cooling Towers (2) (ton/yr)	Auxiliary Boiler (ton/yr)	Emergency Generators (3) (ton/yr)	Fire Water Pump (ton/yr)	Gasification Flare (ton/yr)	SRU Flare (ton/yr)	Rectisol Flare (ton.yr)	Tail Gas Thermal Oxidizer (ton/yr)	CO_2 Vent (ton/yr)	Gasifier (ton/yr)	Feedstock (4) (ton/yr)
NO_X	186.4	167.2	--	1.7	0.2	0.1	4.3	0.2	0.2	10.9	--	1.8	--
CO	322.7	150.2	--	5.8	0.1	0.2	48.8	0.1	0.1	9.1	106.9	1.5	--
VOC	36.1	32.5	--	0.6	0.03	0.01	0.003	0.002	0.002	0.3	2.4	0.1	--
SO_2	38.4	29.2	--	0.3	0.001	0.0003	0.004	0.055	0.003	8.8	--	0.03	--
PM_{10}	111.4	82.4	24.1	0.8	0.01	0.001	0.007	0.004	0.004	0.4	--	0.1	3.6
$PM_{2.5}$ (5)	99.2	82.4	14.5 (6)	0.8	0.01	0.001	0.007	0.004	0.004	0.4	--	0.1	1.0
NH_3	75.9	75.9	--	--	--	--	--	--	--	--	--	--	--
H_2S	1.3	--	--	--	--	--	--	--	--	--	1.3	--	--

Source: HECA Project

Notes:

1 Total annual HRSG emissions represents the maximum emissions rate from a composite firing scenario (all three fuels)
2 Includes contributions from all three cooling towers
3 Includes contributions from both emergency generators
4 Feedstock emissions are shown as the contribution of all dust collection points.
5 Where $PM_{10} = PM_{2.5}$, it is assumed that PM_{10} is 100 percent $PM_{2.5}$
6 Where $PM_{2.5}$ is 60 percent of the PM_{10} emissions for cooling towers

CO = carbon monoxide
CO_2 = carbon dioxide
CTG = combustion turbine generator
H_2S = hydrogen sulfide
NH_3 = ammonia
NO_X = nitrogen oxides
PM_{10} = particulate matter less than 10 microns in diameter
$PM_{2.5}$ = particulate matter less than 2.5 microns in diameter
SO_2 = sulfur dioxide
VOC = volatile organic compounds

Revised Table 4-3 1-Hour Operating Emission Rates for CTG/HSRG Operating Load Scenarios

Ambient Temperature	UNITS	Winter Minimum, 20°F				Yearly Average, 65°F				Summer Maximum, 97°F			
CTG Load Level	% Load	100%	100%	80%	60%	100%	100%	80%	60%	100%	100%	80%	60%
Evap Cooling Status	Off/on	N/A	N/A	N/A	N/A	N/A	N/A	N/A	N/A	N/A	N/A	N/A	N/A
Duct Burner Status	Off/on	On	Off	Off	Off	On	Off	Off	Off	On	Off	Off	Off
Average Emission Rates from CTG (lbs/hr/turbine) - Normal Operation Natural Gas													
NO_x (@ 4.0 ppm)	Lb/hr	36.3	29.0	24.8	20.8	35.1	27.0	23.1	19.4	33.3	26.1	22.4	18.7
CO (@ 5.0 ppm)	Lb/hr	27.6	22.1	18.8	15.8	26.7	20.5	17.6	14.8	25.3	19.8	17.0	14.2
VOC (@ 2.0 ppm)	Lb/hr	6.3	5.0	4.3	3.6	6.1	4.7	4.0	3.4	5.8	4.5	3.9	3.2
SO_2 (@ 12.65 ppmv in fuel)	Lb/hr	5.1	4.1	3.5	3.0	4.8	3.8	3.3	2.8	4.7	3.7	3.2	2.7
$PM_{10} = PM_{2.5}$	Lb/hr	18.0	18.0	18.0	18.0	18.0	18.0	18.0	18.0	18.0	18.0	18.0	18.0
NH_3 (@ 5.0 ppm slip)	Lb/hr	16.7	13.4	11.4	9.6	16.2	12.5	10.7	9.0	15.4	12.1	10.3	8.6
Average Emission Rates from CTG(lbs/hr/turbine) - Normal Operation Hydrogen-Rich Fuel													
NO_x (@ 4.0 ppm)	Lb/hr		37.2	31.5	26.1	39.7	36.9	31.0	25.6	39.7	38.0	30.9	25.6
CO (@ 3.0 ppm)	Lb/hr		17.0	14.4	11.9	18.1	16.8	14.1	11.7	18.1	17.4	14.1	11.7
VOC (@ 1.0 ppm)	Lb/hr		3.2	2.7	2.3	3.5	3.2	2.7	2.2	3.5	3.3	2.7	2.2
SO_2 (@ 5.0 ppmv in fuel)	Lb/hr		6.1	5.2	4.4	6.8	6.1	5.1	4.3	6.8	6.0	5.1	4.3
$PM_{10} = PM_{2.5}$	Lb/hr		19.8	19.8	19.8	19.8	19.8	19.8	19.8	19.8	19.8	19.8	19.8
NH_3 (@ 5.0 ppm slip)	Lb/hr		17.2	14.6	12.0	18.4	17.0	14.3	11.8	18.4	17.6	14.3	11.8
Average Emission Rates from CTG (lbs/hr/turbine) - Normal Operation Co-firing													
NO_x (@ 4.0 ppm)	Lb/hr	41.3	34.0			38.7	31.7						
CO (@ 5.0 ppm)	Lb/hr	31.4	25.9			29.4	24.1						
VOC (@ 2.0 ppm)	Lb/hr	7.2	5.9			6.7	5.5						
SO_2 (@ 6.7 ppmv in fuel)	Lb/hr	7.4	5.2			7.0	4.8						
$PM_{10} = PM_{2.5}$	Lb/hr	19.8	19.8			19.8	19.8						
NH_3 (@ 5.0 ppm slip)	Lb/hr	19.1	15.7			17.9	14.6						

Source: HECA Project

Notes: Co-firing emissions are controlled at the same amount as natural gas.
Emission rates not provided were not necessary to determine the maximum hourly, 3-hour, 8-hour, 24-hour emission rates or the annual average emission rates.

CO = carbon monoxide
CTG = combustion turbine generator
HRSG = heat recovery steam generator
NH_3 = ammonia
NO_X = nitrogen oxides
ppm = parts per million
PM_{10} = particulate matter less than 10 microns in diameter.
$PM_{2.5}$ = particulate matter less than 2.5 microns in diameter.
SO_2 = sulfur dioxide
VOC = volatile organic compound

Revised Table 4-4 CTG/HSRG Criteria Pollutant Emission Rates during Startup and Shutdown

Cold Startup			Hot Startup			Shutdown		
180 (min. in cold startup)	**Max 1-hr. (lb/hr)**	**Total (lb/180 min.)**	**60 (min. in hot startup)**	**Max 1-hr. (lb/hr)**	**Total lb/60 min.)**	**30 (min. in shutdown)**	**Max 1-hr. (lb/hr)**	**Total (lb/30 min.)**
NO_X	90.7	272.0	NO_X	167.0	167.0	NO_X	62.0	62.0
CO	1,679.7	5,039.0	CO	394.0	394.0	CO	126.0	126.0
VOC	266.7	800.0	VOC	98.0	98.0	VOC	21.0	21.0
SO_2	5.1	15.3	SO_2	5.1	5.1	SO_2	2.6	2.6
$PM_{10} = PM_{2.5}$	19	57.0	$PM_{10} = PM_{2.5}$	19.8	19.8	$PM_{10} = PM_{2.5}$	5.0	5.0

Source: HECA Project

Notes:

CTGs will always be started burning natural gas. Startup and shutdown emission rates above reflect natural gas.

Startup and shutdown SO_2 emissions will always be lower than normal operation SO_2 emissions. Startup and shutdown emissions are assumed equal to normal operations (burning natural gas) at the max emission rate.

Startup/shutdown duration defined as operation of CTG below 60 percent load when gaseous emission rates (lb/hr basis) exceed the controlled rates defined as normal operation

CO = carbon monoxide

NO_X = nitrogen oxides

PM_{10} = particulate matter less than 10 microns in diameter and is assumed to equal $PM_{2.5}$ = particulate matter less than 2.5 microns in diameter

SO_2 = sulfur dioxide

VOC = volatile organic compounds

Revised Table 4-5 Criteria Pollutant Sources and Emission Totals for the Worst Case CTG Emissions Scenario for All Averaging Times

Averaging Time	Worst-Case Emission Scenarios by Operating Equipment	Pollutant	Emissions in Pounds – Entire Period		
			CTG/HRSG (Natural Gas)	CTG/HRSG (Hydrogen-Rich Fuel)	CTG/HRSG (Co-firing)
1 hour	**NO_X:** Cold startup hour	NO_X	167.0	167.0	167.0
	CO: Cold startup hour	CO	1,679.7	1,679.7	1,679.7
	SO_X: Full-load turbine operation with duct firing at peak fuel usage	SO_X	5.1	6.8	7.4
3 hour	**SO_X:** Continuous full-load turbine operation with duct firing (both turbines) at peak fuel usage	SO_X	15.3	20.5	22.1
8 hour	**CO:** Two cold starts, three shutdowns, and remainder of period at full load operation with full duct firing (both turbines) at peak fuel usage	CO	10,469.8	10,465.1	10,471.7
24 hour	**NO_X:** 20 hours of natural gas firing at the winter minimum (20°F) without duct firing and 4 hours of co-firing at the winter minimum (20°F) without duct firing	NO_X	20 hrs = 580.5 Total = 716.5	n/a	4 hrs = 136.0 Total = 716.5
	SO_X, PM_{10}: Continuous full-load turbine operation with duct firing (both turbines) at peak fuel use; except PM_{10} for natural gas: four cold starts, four shutdowns, and remainder of period at full load operation with full duct firing (both turbines) at peak fuel usage	PM_{10} = $PM_{2.5}$	432	475.2	475.2
		SO_X	122.4	163.8	177.2
Annual	**NO_X, CO, VOC, PM_{10}, and SO_X:** 10 hot starts, 10 cold starts and 20 shutdowns, and remainder of turbine operates at full load with duct firing	NO_X	296,044.0	334,353.0	325,712.3
		CO	277,817.2	206,919.2	300,390.9
		VOC	59,906.8	37,984.6	65,066.5
		PM_{10} = $PM_{2.5}$	149,866.0	164,755.6	164,755.6
		SO_X	40,045.4	56,713.0	58,357.9

Source: HECA Project

Notes:

CO = carbon monoxide
CTG = combustion turbine generator
°F = degrees Fahrenheit
HRSG = heat recovery steam generator
NO_X = nitrogen oxides
PM_{10}: = particulate matter less than 10 microns in diameter, and is assumed to equal $PM_{2.5}$ = particulate matter less than 2.5 microns in diameter
SO_X = sulfur oxides
VOC = volatile organic compounds

Revised Table 4-6 Average Annual Emissions per Turbine Operating Scenario

Pollutant	HRSG Stack - Nat Gas (tons/yr/CT)	HRSG Stack - Hydrogen-Rich Fuel (tons/yr/CT)	HRSG Stack - Co Firing (tons/yr/CT)	Maximum (tons/yr/CT)
NO_X	148.0	167.2	162.9	167.2
CO	138.9	103.5	150.2	150.2
VOC	30.0	19.0	32.5	32.5
SO_2	20.0	28.4	29.2	29.2
$PM_{10} = PM_{2.5}$	74.9	82.4	82.4	82.4
NH_3	67.1	75.9	73.9	75.9

Source: HECA Project

Notes:

CT = combustion turbine
CO = carbon monoxide
HRSG = heat recovery steam generator
NH_3 = ammonia
NO_X = nitrogen oxides
PM_{10} = particulate matter 10 microns in diameter
$PM_{2.5}$ = particulate matter 2.5 microns in diameter ($PM_{2.5}$ is assumed to equal PM_{10})
SO_2 = sulfur dioxide
VOC = volatile organic compounds

Commissioning

In this Amendment, there will be no emission rates associated with the commissioning of the Auxiliary CTG, because this unit will no longer be part of the Project design.

PM_{10} emission rates are expected to be lower when commissioning the CTG/HRSG on hydrogen-rich fuel. However, no changes will be made to the emission rates represented in Table 4-12 of the filed ATC application, Duration and Criteria Pollutant Emissions for Commissioning of the CTG/HRSG on Hydrogen-Rich Fuel at 59°F. Therefore, PM_{10} emission rates during the commissioning of the CTG/HRSG on hydrogen-rich fuel will be a conservative over-estimate.

There are no changes to the Laws, Ordinances, Regulations and Standards (LORS) that the Project is applicable to as a result of this amendment.

The removal of the Auxiliary CTG and the revision of the PM_{10} emission rates from the CTG/HRSG reduce the Project emissions. However, the annual Project emissions of CO, NO_X, and PM_{10} are still above the PSD triggers as shown in filed ATC application.

The proposed BACT for the Auxiliary CTG will no longer apply, since the unit has been removed.

The change in offset requirements for this Project as a result of this amendment is shown in Section 6.

Revised estimated required emission reduction credits due to the Project modification are presented in selection revised tables provided below.

Revised Table 6-1 HECA Annual Operating Emissions

Pollutant	Annual Operational Emissions (tons/year)	Annual Operational Emission (pounds/year)	Offset Requirement Threshold (Lbs/yr)
VOC	36.1	72,156.09	20,000
NO_x	186.4	372,841.56	20,000
SO_x	38.4	76,712.73	54,750
PM_{10}	111.4	222,700.73	29,200

Source: HECA Project
Notes:
NO_x = nitrogen oxide(s)
PM_{10} = particulate matter less than 10 microns in diameter
SO_x = sulfur oxides
VOC = volatile organic compounds

Revised Table 6-2 Estimated ERCS Required

Pollutant	Total Annual Offset Requirement (pounds/year)	Total Quarterly Offset Requirement (pounds/quarter)	Annual ERC* (pounds/year)	Quarterly ERC* (pound/quarter)
VOC	52,156	13,039	78,234	19,559
NO_X	352,842	88,210	529,262	132,316
SO_2	21,963	5,491	32,944	8,236
PM_{10}	193,501	48,375	290,251	72,563

*assumed 1.5 distance ratio
Notes:
ERC = emission reduction credits
NO_X = nitrogen oxide(s)
VOC = volatile organic compounds
SO_2 = sulfur oxides

7.1 AIR DISPERSION MODELING

The purpose of the air quality impact analyses is to evaluate whether criteria pollutant emissions resulting from the Project will cause or contribute significantly to a violation of a California or national AAQS or contribute significantly to degradation of air quality-related values in Class I areas. The air quality impact analyses were performed using the same model and model option selections, original meteorological data set issued by SJVAPCD, and receptor locations as in the filed ATC application. Copies of the revised modeling files are included on the Revised Air Quality Modeling DVD included with this Amendment.

Building Wake Effects

The BPIP-Prime analysis was rerun to take into account the removal of the Auxiliary CTG structure. An updated table listing all the structures, minus the Auxiliary CTG building, evaluated in the downwash analysis is included in Revised Appendix C3. Input and output electronic files for the BPIP-Prime analysis are included with those from all other dispersion modeling analyses on the Revised Air Quality Modeling DVD included with this Amendment.

Construction Impacts Modeling

There will be no change to the construction impacts modeling results as a result of this Amendment.

Turbine Impact Screening Modeling

The previously filed ATC application described a turbine impact screening modeling analysis that was performed to determine which CTG/HRSG operating mode and stack parameters produced worst-case off-site impacts. Only the emissions from the CTGs with and without duct firing and evaporative cooling were considered in this preliminary modeling step. The AERMOD model simulated transport and dispersion of natural gas combustion emissions released from the 20-foot-diameter (6.10-meter), 213-foot-tall (65-meter) stack for the CTG/HRSG unit. Unlike in the filed ATC application, the AERMOD model was not used to simulate emissions for the Auxiliary CTG, since it has been removed from the Project design. Revised Table 7-1, Turbine Screening Results Normal Operations – Emissions and Stack Parameters per Turbine, summarizes the combustion CTG screening results for the different CTG operating load conditions.

The maximum ground level concentrations predicted to occur off site with unit turbine emission rates for each of the seven operating conditions shown in Revised Table 7-1 were then multiplied by the corresponding turbine emission rates for specific pollutants. The highest resulting concentration values for each pollutant and averaging time were then identified (see bolded values in the table).

The stack parameters associated with these maximum predicted impacts were used in all subsequent simulations of the refined AERMOD analyses described in the next subsection. (Note that the lower exhaust temperatures and flow rates at reduced turbine loads correspond to reduced plume rise, in some cases resulting in higher off-site pollutant concentrations than the higher baseload emissions.) Model input and output files for the screening modeling analysis are

included with those from all other modeling tasks on the Revised Air Quality modeling DVD that is provided with this Amendment.

Revised Table 7-1 Turbine Screening Results Normal Operations – Emissions and Stack Parameters per Turbine

Case	Case 1A	Case 1B	Case 1C	Case 2A	Case 2B	Case 2C	Case 3
Scenario Description	HRSG Stack, Hydrogen-rich Fuel			HRSG Stack, Natural Gas Fuel			HRSG Stack Co-Firing
HRSG/CTG Load Level	100% Load	80% Load	60% Load	100% Load	80% Load	60% Load	100% Load
Stack Outlet Temperature (°F)	200.0	190.0	180.0	180.0	170.0	160.0	190.0
Stack Outlet Temperature (K)	366.48	360.93	355.37	355.37	349.82	344.26	360.93
Stack Exit Velocity (ft/s)	63.3	51.8	42.7	53.1	45.6	37.7	58.4
Stack Exit Velocity (m/s)	19.3	15.8	13	16.2	13.9	11.5	17.8
NO_X as NO_2 (lb/hr)	166.7	166.7	166.7	166.7	166.7	166.7	166.7
CO (lb/hr)	1,679.4	1,679.4	1,679.4	1,679.4	1,679.4	1,679.4	1,679.4
SO_2 (lb/hr)	8.7	8.7	8.7	8.7	8.7	8.7	8.7
PM_{10} (lb/hr)	19.8	19.8	19.8	19.8	19.8	19.8	19.8
NO_X (g/s)	21	21	21	21	21	21	21
CO (g/s)	211.6	211.6	211.6	211.6	211.6	211.6	211.6
SO_2 (g/s) (based on 0.4 grain total S/100 scf)	1.1	1.1	1.1	1.1	1.1	1.1	1.1
PM_{10} (g/s)	2.5	2.5	2.5	2.5	2.5	2.5	2.5
Model Results – Maximum X/Q concentration (μg/m³/(g/s)) predicted from AERMOD (all receptors)							
1–hour	3.682	4.114	4.483	4.191	4.668	6.536	3.966
3–hour [1]	3.313	3.703	4.035	3.771	4.201	5.882	3.569
8–hour [1]	2.577	2.880	3.138	2.933	3.268	4.575	2.776
24–hour [1]	1.473	1.646	1.793	1.676	1.867	2.614	1.586
annual [1]	0.295	0.329	0.359	0.335	0.373	0.523	0.317
Maximum Concentration (μg/m³) Predicted per Pollutant Normal Operations (all receptors)							
NO_X 1 hour	77.313	86.394	94.140	88.001	98.030	**137.252**	83.280
NO_x annual	6.185	6.911	7.531	7.040	7.842	**10.980**	6.662
CO 1 hour	779.024	870.518	948.575	886.714	987.766	**1,382.977**	839.142
CO 8 hour	545.317	609.363	664.003	620.700	691.436	**968.084**	587.399
SO_2 1 hour	4.050	4.525	4.931	4.610	5.135	**7.189**	4.362
SO_2 3 hour	3.645	4.073	4.438	4.149	4.621	**6.470**	3.926
SO_2 24 hour	1.620	1.810	1.972	1.844	2.054	**2.876**	1.745
SO_2 annual	0.324	0.362	0.394	0.369	0.411	**0.575**	0.349
PM_{10} 24 hour	3.683	4.115	4.483	4.190	4.668	**6.535**	3.965
PM_{10} annual	0.738	0.823	0.898	0.838	0.933	**1.308**	0.793
Case	**Case 1A**	**Case 1B**	**Case 1C**	**Case 2A**	**Case 2B**	**Case 2C**	**Case 3**

Source: HECA Project

[1] Only 1-hour impacts were modeled. Impact concentrations for other averaging times were estimated with USEPA Screening Factors: 0.9 for a 3-hour average time, 0.7 for an 8-hour average time, 0.4 for a 24-hour average time, and 0.08 for an annual average.

Notes:

CO = carbon monoxide
CTG = combustion turbine generator
μg/m³ = micrograms per cubic meter
°F = degrees Fahrenheit
g/s = grams per second
HRSG = heat-recovery steam generator
K = Kelvin
NO_2 = nitrogen dioxide
NO_X = nitrogen oxides
PM_{10} = particulate matter less than 10 microns in diameter
SCR = selective catalytic reduction
SO_2 = sulfur dioxide

Refined Modeling

A refined modeling analysis was performed to estimate off-site criteria pollutant impacts from operational emissions of the Project. The CTG/HRSG was modeled assuming the worst-case emissions corresponding to each averaging time and the turbine stack parameters that were determined in the turbine screening analysis (see previous subsection). The maximum mass emission rates that will occur over any averaging time, whether during turbine startups, normal operations, turbine shutdowns, or a combination of these activities, were used in all refined modeling analyses (see Revised Table 7-1).

The DEGADIS model that was used to calculate CO and H_2S impacts from the carbon dioxide vent in the filed ATC application was not re-run, because there were no changes made to the emission rates from the carbon dioxide vent as a result of this Amendment.

Fumigation Analysis

Fumigation modeling was conducted in the same manner as described in the filed ATC application. However, because the Auxiliary CTG stack is no longer a part of the Project, SCREEN3 was run for the CTG/HRSG unit, tail gas thermal oxidizer, and gasifier refractory heater stack parameters. In addition, new PM_{10} and $PM_{2.5}$ pollutant emissions were used in the fumigation analysis for the CTG/HRSG unit.

A unit emission rate was used (1 gram per second) in the fumigation modeling to obtain a maximum unit concentration (x/Q), and the model results were scaled to reflect expected Project emissions for each pollutant. Inversion breakup fumigation concentrations were calculated for 1 and 3 hour averaging times using U.S. Environmental Protection Agency (USEPA)–approved conversion factors. These multiple-hour model predictions are conservative, since inversion breakup fumigation is a transitory condition that would most likely affect a given receptor location for only a few minutes at a time. To calculate the inversion breakup fumigation, the default thermal internal boundary layer (TIBL) factor of 6 in the SCREEN3 model was used.

Fumigation impacts can affect concentrations longer than 1 hour; the procedures described in Section 4.5.3 of “Screening Procedures for Estimating the Air Quality Impact of Stationary Sources” were used to determine the 3 and 8 hour average concentrations.

Modeling input and output files are included on the Revised Air Quality Modeling DVD included with this Amendment.

7.2 COMPLIANCE WITH AMBIENT AIR QUALITY STANDARDS AND PSD REQUIREMENTS

Air dispersion modeling was done to evaluate the maximum increase in ground level pollutant concentrations resulting from Project emissions based on the modifications, and to compare the maximum predicted impacts, including background pollutant levels, with applicable short-term and long-term California Ambient Air Quality Standards (CAAQS) and National Ambient Air Quality Standards (NAAQS).

Construction Impacts

There will be no change to the construction impacts as a result of this Amendment.

Operational Impacts

The emissions used for each pollutant and averaging time are explained and quantified in Section 4. Commissioning impacts, which will occur on a temporary, one-time basis and will not be representative of normal operations, were addressed separately, as described in the next section.

Revised Table 7-4, AERMOD Modeling Results for Project Operations (All Project Sources Combined), summarizes the maximum predicted criteria pollutant concentrations due to Project emissions. The incremental impacts of Project emissions will be below the federal Prevention of Significant Deterioration (PSD) Significant Impact Levels (SILs) for all attainment pollutants, despite the use of worst-case emissions scenarios for all pollutants and averaging times. Although maximum predicted values for PM_{10} are below the SILs, these thresholds do not apply to this pollutant because the San Joaquin Valley Air Basin is designated as being in non-attainment with respect to the federal ambient standards. No SILs have been established yet for $PM_{2.5}$.

Revised Table 7-4 also shows that the modeled impacts due to the Project emissions, in combination with conservative background concentrations, will not cause a violation of any NAAQS and will not significantly contribute to the existing violations of the federal and state PM_{10} and $PM_{2.5}$ standards. In addition, as described later, all of the Project's operational emissions of non-attainment pollutants and their precursors will be offset to ensure a net air quality benefit.

The locations of predicted maximum impacts will vary by pollutant and averaging time. Revised Figure 7-3, Locations of Maximum Predicted Ground Level Pollutant Concentrations for the Operational Project Area, shows the locations of the maximum predicted operational impacts for all pollutants and averaging times.

The peak 24 hour PM_{10}, $PM_{2.5}$, and SO_2 concentrations and peak SO_2 annual concentration are predicted to occur on the western boundary of the Project Site, while the peak annual PM_{10} and $PM_{2.5}$ concentrations are predicted to occur on the eastern boundary of the Project Site. The peak 1 hour NO_X, SO_2, and CO concentrations, peak 3 hour SO_2 concentration, and peak 8 hour CO concentration are predicted to occur within approximately 2 miles south of the Project Site. The peak annual NO_X concentration occurred at the northern Project Site.

CO impacts from the carbon dioxide vent were predicted to be 2,934 micrograms per cubic meter (µg/m3) at a point off of the Project Site and Controlled Areas at 778 meters from the source. This value is below the CAAQS for CO and below the 8 hour CO SIL, but above the 1 hour CO SIL. A stability class of D combined with a wind speed of 1 meter per second was found to calculate the worst-case results.

Hydrogen sulfide impacts from the carbon dioxide vent were predicted to be 35.84 µg/m3 at the maximum impact point off of the Project Site and Controlled Areas at 778 meters from the source. This value is below the 1 hour CAAQS of 42 $\mu g/m^3$.

Revised Table 7-4 AERMOD Modeling Results for Project Operations (All Project Sources Combined)

Pollutant	Averaging Period	2000	2001	2002	2003	2004	Max	Class II Significance Level	% of SIL	Background Conc. (4)	Monitoring Station Description (4)	CAAQS	NAAQS	Total Conc.
		(µg/m^3)	(µg/m^3)	(µg/m^3)	(µg/m^3)	(µg/m^3)	(µg/m^3)	(µg/m^3)		(µg/m^3)		(µg/m^3)	(µg/m^3)	(µg/m^3)
NO_2 (1)	1-hour (OLM) (1,3)	89.70	89.77	93.90	88.69	90.48	**93.90**	NA	NA	190.1	1	339	NA	284
	Annual (OLM) (1)	0.82	0.86	0.81	0.87	0.79	**0.87**	1	87%	39.6	1	57	100	40.5
CO	1-hour (3)	1,191.74	1,109.96	1,400.54	1,025.55	1,067.22	**1,400.54**	2,000	71%	4,025	2	23,000	40,000	5,425
	8-hour (3)	210.59	167.24	185.80	178.94	150.96	**210.59**	500	43%	2,444	2	10,000	10,000	2,655
SO_2	1-hour (3)	21.03	16.30	20.86	16.05	19.44	**21.03**	NA	NA	340.6	3	655	NA	362
	3-hour (3)	7.38	6.10	6.95	7.07	6.79	**7.38**	25	31%	195	3	NA	1300	202
	24-hour (3)	0.55	0.53	0.46	0.55	0.78	**0.78**	5	18%	81.38	3	105	365	82
	Annual	0.13	0.12	0.13	0.13	0.13	**0.13**	1	14%	26.7	3	NA	80	26.8
PM_{10}	24-hour (3)	2.56	2.39	2.90	2.63	2.58	**2.90**	5	58%	267.4	4	50	150	-
	Annual	0.47	0.47	0.50	0.52	0.53	**0.53**	1	59%	56.5	4	20	Revoked	-
$PM_{2.5}$ (4)	24-hour (3)	1.50	1.42	1.74	1.54	1.54	**1.74**	-	44%	154	5	NA	35	-
	Annual	0.35	0.35	0.37	0.38	0.39	**0.39**	-	45%	25.2	5	12	15	-

Revised Table 7-4 AERMOD Modeling Results for Project Operations (All Project Sources Combined)

Pollutant	Averaging Period	2000	2001	2002	2003	2004	Max	Class II Significance Level	% of SIL	Background Conc. (4)	Monitoring Station Description (4)	CAAQS	NAAQS	Total Conc.
		(µg/m³)	(µg/m³)	(µg/m³)	(µg/m³)	(µg/m³)	(µg/m³)	(µg/m³)		(µg/m³)		(µg/m³)	(µg/m³)	(µg/m³)
H_2S (5)	1-hour	35.84	35.84	35.84	35.84	35.84	**35.84**	NA	NA	NA	NA	42	NA	35.84

Source: HECA Project

Notes:

1 Ozone Limiting Method (OLM) was applied using hourly O_3 data.

2 CO_2 Vent was not included in the AERMOD analysis; it was modeled using DEGADIS/SCREEN3, which predicted maximum impacts of 2,934 µg/m³ for the 1-hour average. The current assumption is that only one gasifier heater is expected to be operational at any time. Auxiliary Boiler does not operate with HRSG at the same time for short-term average period. Therefore, the Auxiliary Boiler was not included in the modeling analysis while HRSG was included because HRSG gives more impact on off-Project Site and Controlled Area concentration.

3 For short-term (1-, 3-, 8-, and 24-hour) modeling, only one emergency generator will be operational at any one time, and the current assumption is that only one gasifier heater is expected to be operational at any one time.

4 Monitoring station for the maximum background concentration is described below:

CARB, Maximum of last three years (2006-2008), Bakersfield Golden State Highway, 2006
CARB, Maximum of last three years (2006-2008), Bakersfield Golden State Highway, 2007
CARB, Maximum of last three years (2006-2008), Bakersfield Golden State Highway, 2008
CARB, Maximum of last three years (2006-2008), Shafter-Walker Street, 2007
CARB, Maximum of last three years (2006-2008), Fresno – 1st Street, 2007

5 H_2S was modeled using DEGADIS (its only source is the CO_2 vent). DEGADIS is a screening model that uses worst-case meteorology rather than actual monitored hourly meteorological data.

CAAQS = California Ambient Air Quality Standards
CO = carbon monoxide
H_2S = hydrogen sulfide
µg/m³ = micrograms per cubic meter
NAAQS = National Ambient Air Quality Standards
NO_2 = nitrogen dioxide
OLM = ozone limiting method
PM_{10} = particulate matter less than 10 microns in diameter
$PM_{2.5}$ = particulate matter less than 2.5 microns in diameter
SO_2 = sulfur dioxide

Fumigation

The predicted peak concentrations from inversion fumigation from Project emissions, including background, are predicted to be below the CAAQS and are as follows:

- NO_X 1 hour = 269.25 µg/m^3
- SO_2 1 hour = 32.68 µg/m^3
- SO_2 3 hour = 21.60 µg/m^3
- CO 1 hour = 5,228.26 µg/m^3

Turbine Commissioning

Changes will be made to the commissioning emission rates, even though the emission rates in the filed ATC application would overestimate emission rates due to the removal of the Auxiliary CTG. The AERMOD model will not be re-run, since there were no changes to turbine commissioning emission rates.

Impacts for Non-attainment Pollutants and their Precursors

The emission offset program described in the SJVAPCD Rules and Regulations was developed to facilitate net air quality improvement when new sources locate within the District. Project impacts of non-attainment pollutants (PM_{10}, $PM_{2.5}$, and O_3) and their precursors (NO_X, SO_2, and VOC) will be fully mitigated by emission offsets. The emission reductions associated with these offsets have not been accounted for in the modeled impacts noted above. Thus, the impacts indicated in the foregoing presentation of model results for the Project may be significantly overestimated.

Effects on Visibility from Plumes

There will be no changes to the effects on visibility from plumes, since there are no changes to the cooling tower emissions as a result of this Amendment.

7.2.1 Impacts on Air Quality Related Values in Class I Area

The CALPUFF modeling analysis for impacts to Air Quality Related Values (AQRV) was updated to reflect the project design changes. The objectives of the modeling were to demonstrate whether air emissions from the Project will cause or contribute to a PSD increment exceedance or cause a significant impact on visibility, regional haze, or sulfur or nitrogen deposition in any Class I area.

Since the Project location has not changed as a result of this Amendment, the same Class I area (San Rafael Wilderness Area) was included in the revised AQRV analysis. PSD increment analysis for the San Rafael Wilderness Class I area is shown in Revised Table 7-6, PSD Class I Increment Significance Analysis – CALPUFF Results. No Class I PSD increments will be exceeded.

Revised Table 7-6 PSD Class I Increment Significance Analysis – CALPUFF Results

Class I Area	Pollutant	Annual NO_x	3-hour SO_2	24-hour SO_2	Annual SO_2	24-hour Particulate Matter	Annual Particulate Matter
	Unit	**µg/m^3**	**µg/m^3**	**µg/m^3**	**µg/m^3**	**µg/m^3**	**Annual**
	Threshold	**0.1**	**1**	**0.2**	**0.08**	**0.32**	**0.16**
San Rafael Wilderness Area	2001	3.77E-03	2.18E-01	2.53E-02	7.47E-04	8.65E-02	3.33E-03
	2002	4.08E-03	2.33E-01	2.56E-02	8.79E-04	7.67E-02	3.80E-03
	2003	4.23E-03	2.73E-01	2.75E-02	8.85E-04	9.29E-02	3.77E-03
Exceed?		No	No	No	No	No	No

Source: HECA Project
µg/m^3 = micrograms per cubic meter
NO_x = nitrogen oxides
SO_2 = sulfur dioxide

Effects on Visibility.

This revised analysis was conducted using the same model (CALPUFF). The same 3-year meteorological data set for 2001-2003 was used in the revised analysis.

Visibility impact results for the San Rafael Wilderness Class I area are shown in Revised Table 7-7, Visibility Analysis – CALPUFF Results. No maximum extinction change exceeds 10 percent with only 1 to 3 days of exceedance of 5 percent despite the conservative operating scenario. Therefore, the Project screening successfully passed all screening criteria.

Revised Table 7-7 Visibility Analysis – CALPUFF Results

Class I Area	Pollutant	No. of Days > 5%	No. of Days >10%	Maximum Extinction Change	Day of Maximum Extinction Change
	Unit	**Days**	**Days**	**%**	**Day**
	Threshold	**0**	**0**	**5**	
San Rafael Wilderness Area	2001	1	0	8.09	308
	2002	3	0	6.56	287
	2003	1	0	5.41	247
Exceed?				No	

Source: HECA Project

Terrestrial Resources.

This revised analysis was conducted using the same model (CALPUFF). Revised Table 7-8, Total Nitrogen and Sulfur Deposition Analysis – CALPUFF Results, summarizes the maximum modeled impacts versus the National Park Service and the U.S. Forest Service significance criteria. All impacts are below the significance criteria.

Revised Table 7-8 Total Nitrogen and Sulfur Deposit Analysis – CALPUFF Results

Class I Area	Pollutant	Deposition Nitrogen	Deposition Sulfur
	Unit	$g/m^2/s$	$g/m^2/s$
	Threshold	1.59E-11	1.59E-11
San Rafael Wilderness Area	2001	9.53E-13	3.91E-13
	2002	1.19E-12	5.12E-13
	2003	1.21E-12	4.61E-13
Exceed?		No	No

Source: HECA Project
Notes:
$g/m^2/s$ = grams per square meter per second.

Aquatic Resources.

A significant effect of NO_X and SO_2 emissions on aquatic resources is nitrogen and sulfur deposition and subsequent acidification. However, because any increased nitrogen and sulfur deposition due to the Project will be minimal, impacts to water acid neutralizing capacity and pH, and, therefore, acidification or eutrophication, are not likely to occur.

The revised CALPUFF/CALMET air impact modeling analysis for Class I areas is presented in selected revised tables, provided in Revised Portions of Appendix C4.

The Project modification would not increase emissions of toxic air contaminants during operation. Therefore, the modification would not change the analysis presented in Section 8 of the filed ATC application, which concluded that the impact of the Project's emissions of toxic air contaminants during operation would be less than significant. Therefore, public health impacts during operation are expected to remain less than significant.

References

URS Corporation, 2009. Authority to Construct Permit Application for Hydrogen Energy California, Kern County, California. Prepared for Energy International LLC. June 2009.

USEPA (U.S. Environmental Protection Agency), 1992. *Screening Procedures for Estimating the Air Quality Impact of Stationary Sources, Revised*. EPA-454/R-92-019. October 1992.

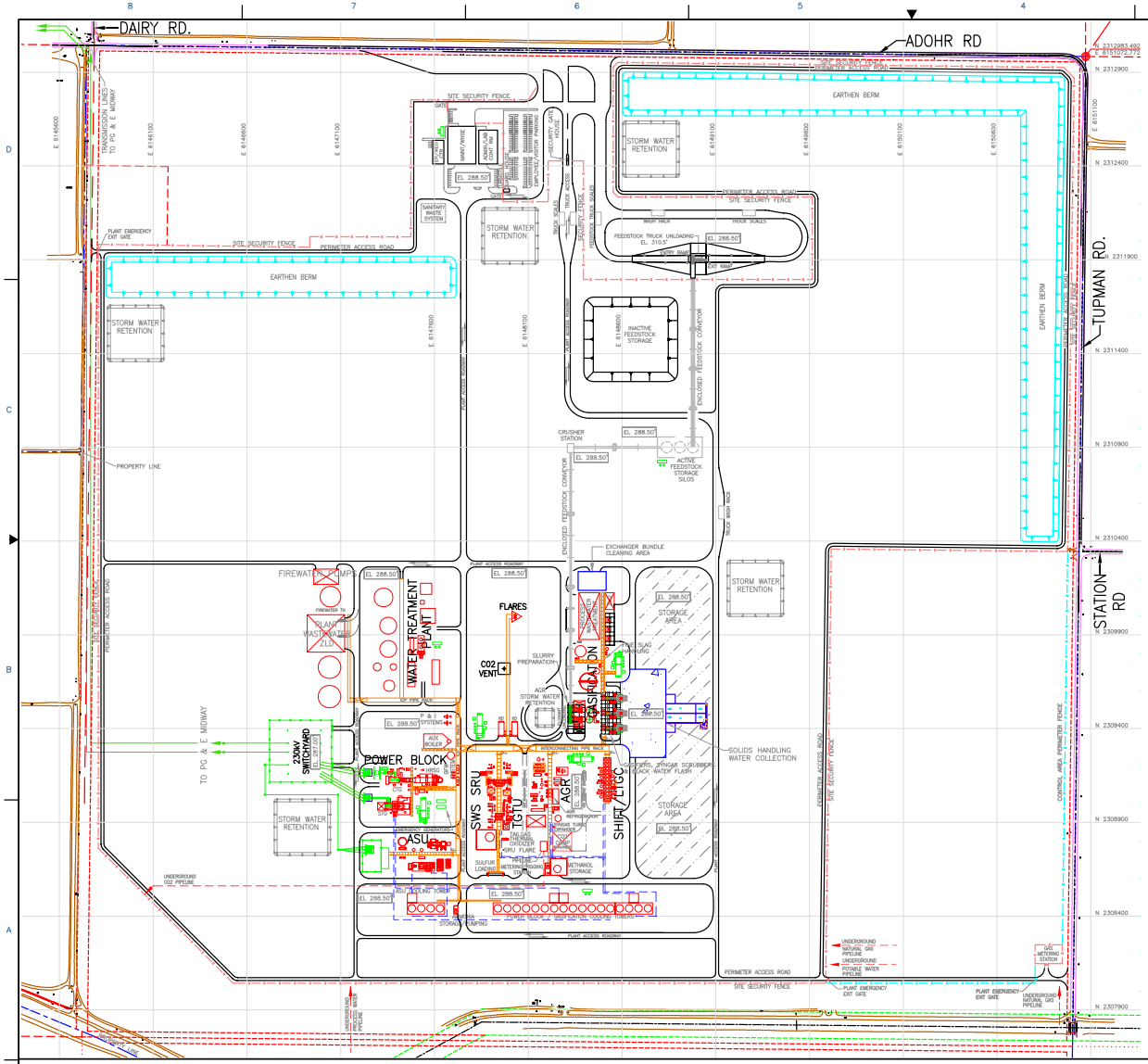

LEGEND

EL 288.50' = H.P. GRADE ELEVATION (FT.)

ASU = AIR SEPARATION UNIT
AGR = ACID GAS REMOVAL
SWS = SOUR WATER STRIPPING
SRU = SULFUR RECOVERY UNIT
TGTU = TAIL GAS TREATING UNIT
CTG = COMBUSTION TURBINE GENERATOR
HRSG = HEAT RECOVERY STEAM GENERATOR
STG = STEAM TURBINE GENERATOR
BFW = BOILER FEEDWATER SYSTEM
PDC = POWER DISTRIBUTION CENTER
LTGC = LOW TEMPERATURE GAS COOLING
ZLD = ZERO LIQUID DISCHARGE
P & I AIR = PLANT AND INSTRUMENT AIR

Source:
Fluor; Hydrogen Energy California, Kern County Power Project;
Preliminary Plot Plan; Drawing No: SK-250-1001, Rev. 1 (09/09/09), Removed Auxiliary CTG

PRELIMINARY PLOT PLAN

September 2009
28067571

Hydrogen Energy California (HECA)
Kern County, California

URS

REVISED FIGURE 1-3

9/15/09 vsa..T:\HECA\GRAPHICS\Amendment Sept 09\Rev 2-5_Prelim Plot Plan.ai

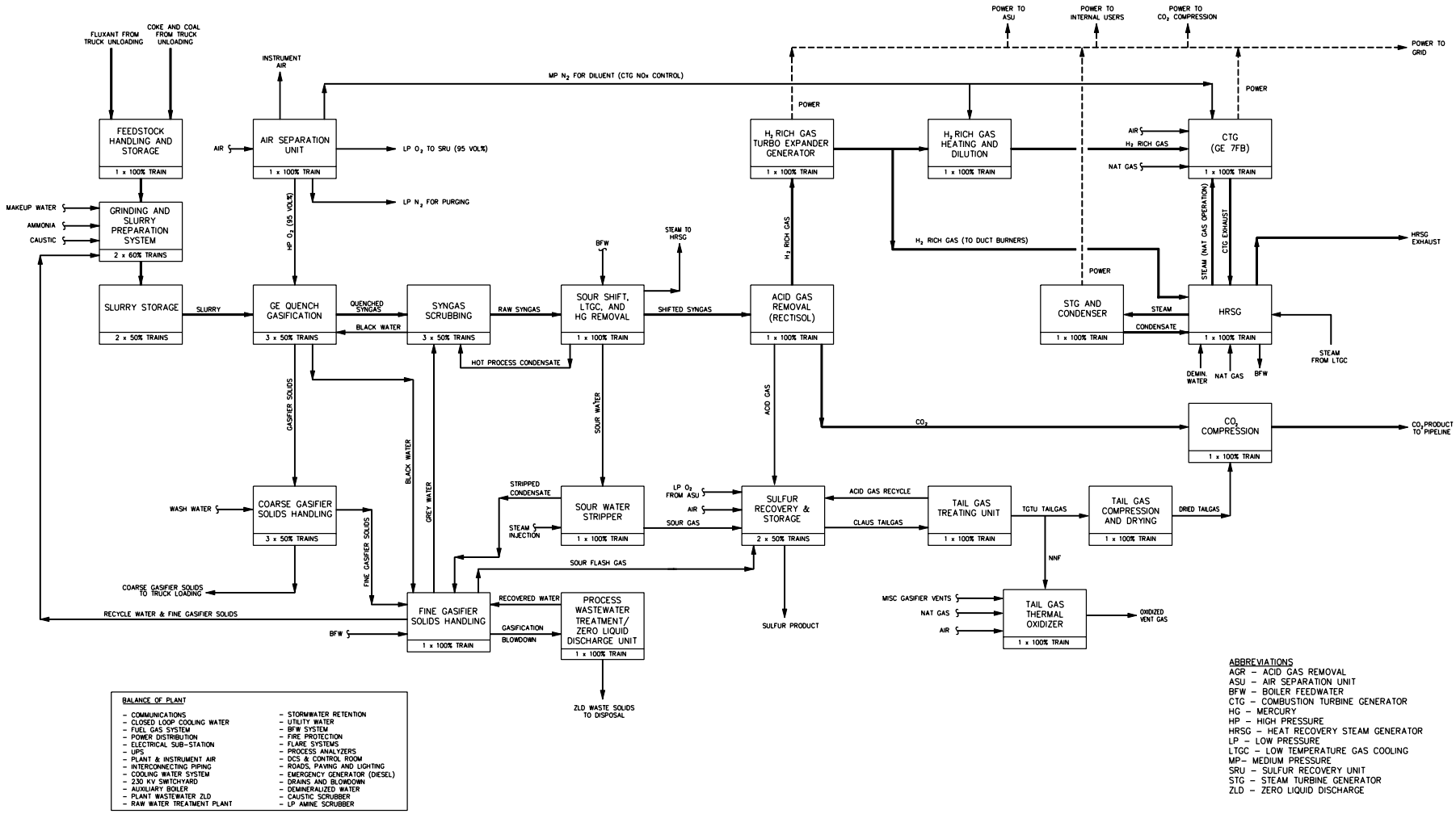

Source:
Fluor; Hydrogen Energy California, Kern County Power Project;
Block Flow Diagram; Drawing No: A3RW-BFD-25-001, Rev. 5 (09/09/09), Removed Auxiliary CTG

OVERALL BLOCK FLOW DIAGRAM

September 2009 Hydrogen Energy California (HECA)
28067571 Kern County, California

URS

REVISED FIGURE 2-1

9/15/09 vsa..T:\HECA\GRAPHICS\Amendment Sept 09\Rev 2-3_overall block.ai

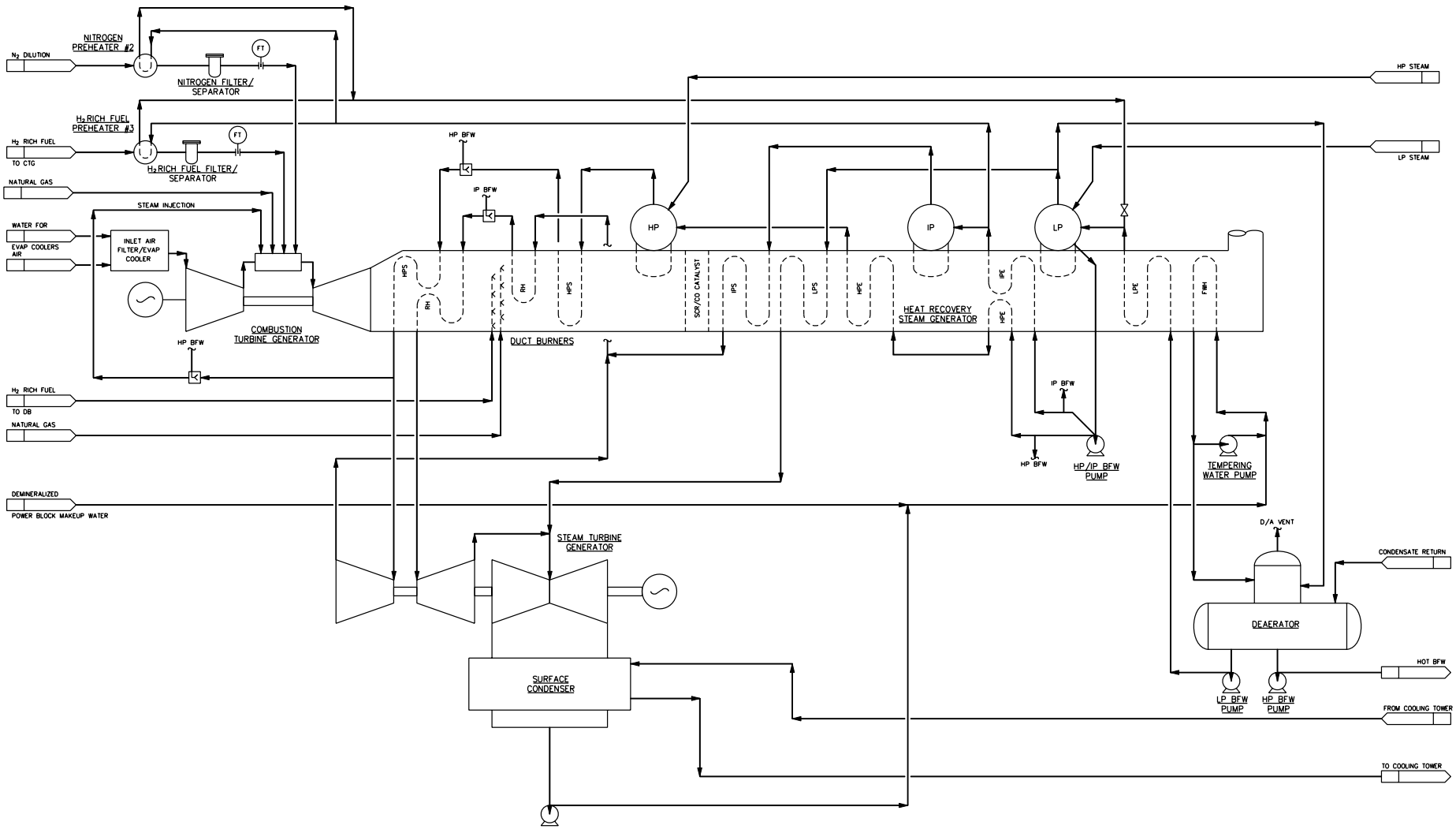

Source:
Fluor; Hydrogen Energy California, Kern County Power Project;
Flow Diagram, Power Block Systems;
Drawing No: A3RW-PFD-25-010, Rev. 2 (09/03/09), Removed Auxiliary CTG

FLOW DIAGRAM
POWER BLOCK SYSTEMS

September 2009 Hydrogen Energy California (HECA)
28067571 Kern County, California

URS

REVISED FIGURE 2-8

9/15/09 vsa..T:\HECA\GRAPHICS\Amendment Sept 09\Rev 2-18_power block systems.ai

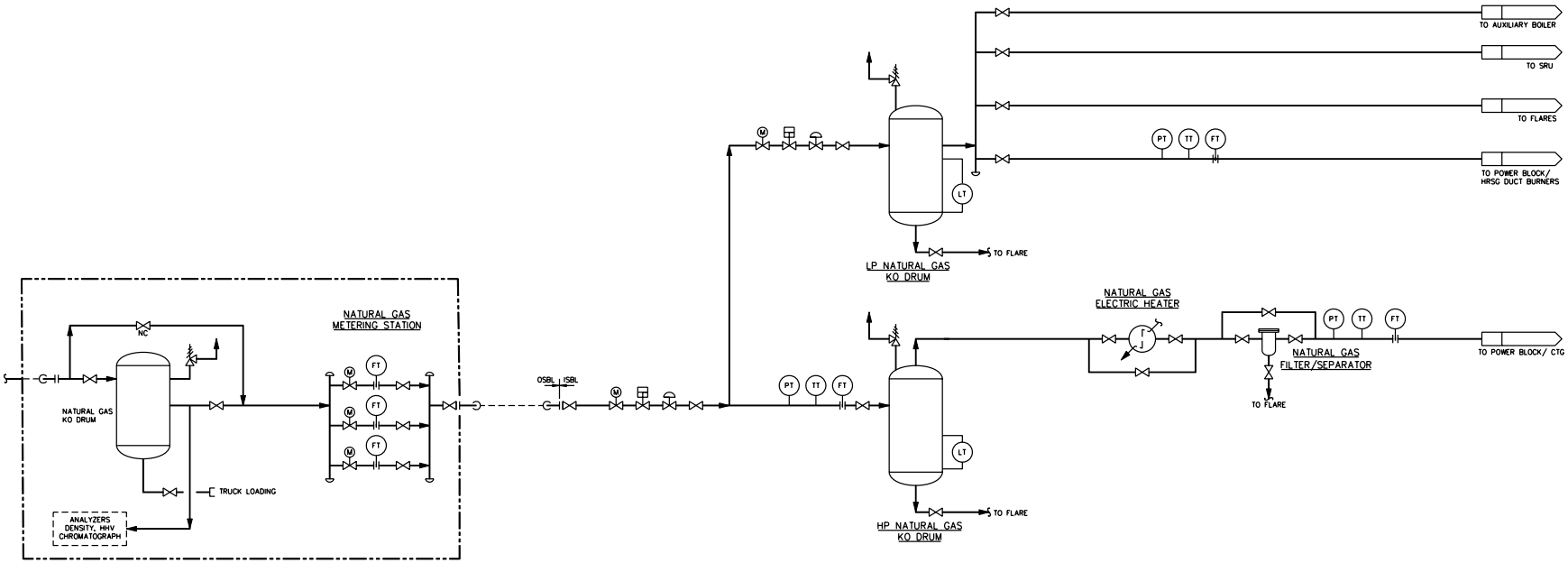

Source:
Fluor; Hydrogen Energy California, Kern County Power Project;
Flow Diagram, Natural Gas System;
Drawing No: A3RW-PFD-25-019, Rev. 3 (09/03/09), Removed Auxiliary CTG

FLOW DIAGRAM
NATURAL GAS SYSTEM

September 2009 Hydrogen Energy California (HECA)
28067571 Kern County, California

URS

REVISED FIGURE 2-9

9/15/09 vsa..T:\HECA\GRAPHICS\Amendment Sept 09\Rev 2-23_natural gas.ai

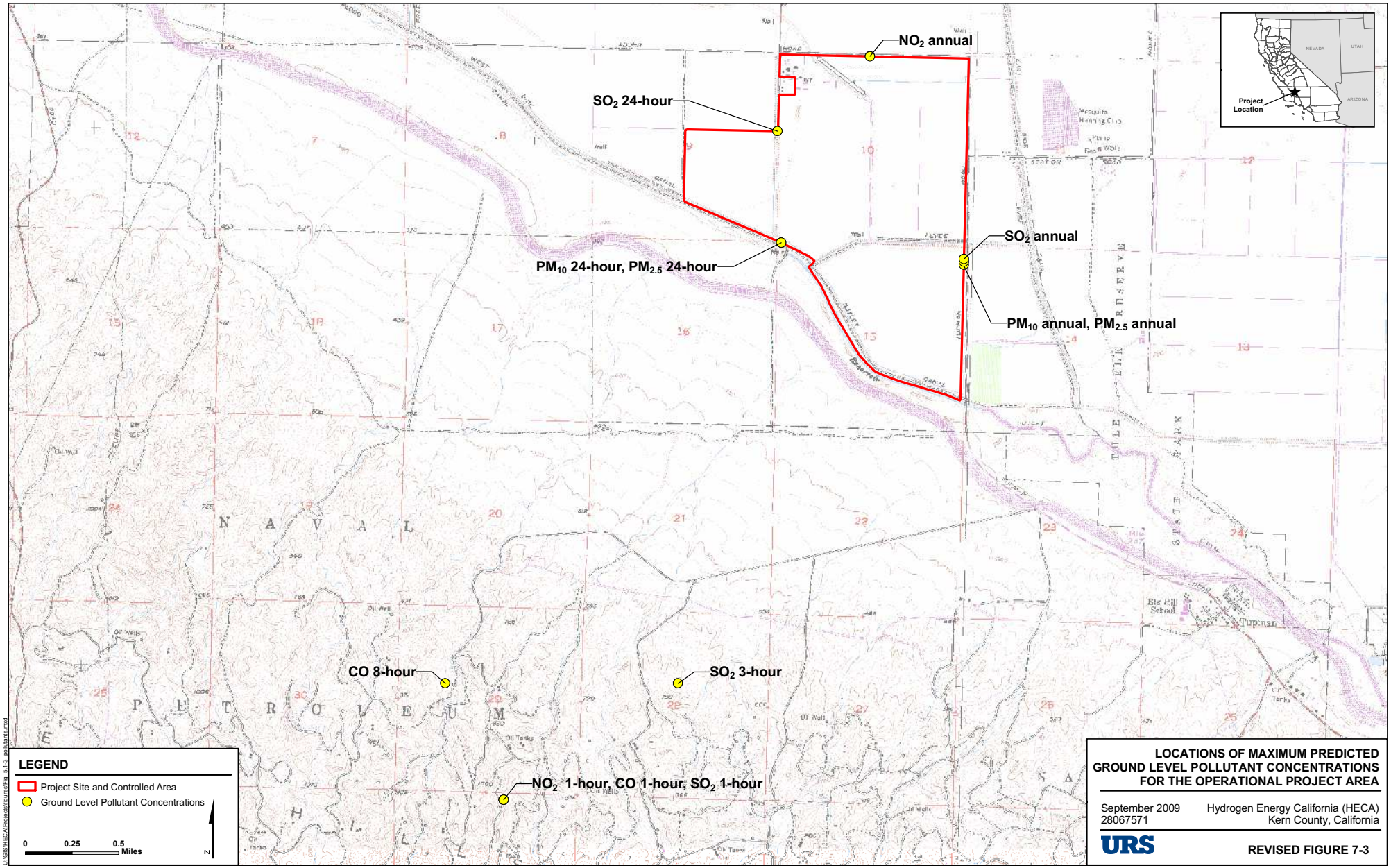

LOCATIONS OF MAXIMUM PREDICTED GROUND LEVEL POLLUTANT CONCENTRATIONS FOR THE OPERATIONAL PROJECT AREA

September 2009 Hydrogen Energy California (HECA)
28067571 Kern County, California

URS

REVISED FIGURE 7-3

Sources: USGS (7.5' quads: Taft 1982, Delano 1982). Created using TOPO!, ©2006 National Geographic Maps, All Rights Reserved. Kern County and State of California (proposed and approved projects).

REVISED APPENDIX C3
HECA DOWNWASH STRUCTURES

Downwash Structures

HECA

Buildings

	Building Name	Comment	Number of Tiers	Tier Number	Base Elevation (ft)	Tier Height (ft)	Number of Corners	Corner 1 East (X) (m)
1	FINESLAG	Fine Slag Handling Enclosure	1	1	288.5	70	4	283221.4
2	SLRYPREP	Slurry Preparation Building	1	1	288.5	165	4	283149.2
3	GASIFIER	Gassifier Structure	1	1	288.5	200	4	283204
4	AGR	AGR Refrigeration Compressor Enclosure	1	1	288.5	40	4	283132.3
5	CO2	CO2 Compressor Enclosure	1	1	288.5	50	4	283148.9
6	ASU_COOL	ASU Cooling Tower	1	1	288.5	50	4	282884
7	STG	Steam Turbine Generator Structure	1	1	288.5	50	12	282851
8	CTG	Combustion Turbine Generator	1	1	288.5	50	10	282851.4
9	HRSG	Heat Recovery Steam Generator	1	1	288.5	90	4	282934.2
10	KO_DRUM	Flare KO Drum	1	1	288.5	35	8	283056.8
11	PWR_COOL	Power Block and Gassification Cooling To	1	1	288.5	50	4	283024.1
12	ASU_COMP	ASU Main Air Compressor Enclosure	1	1	288.5	40	4	282893.5
13	AUX_BOIL	Auxiliary Boiler	1	1	288.5	50	4	282913.4
14	EMER_GN1	Emergency Generator - 1	1	1	288.5	20	4	282933.4
15	EMER_GN2	Emergency Generator - 2	1	1	288.5	20	4	282933.3
16	AIR_SEP	Air Separation Column Can	1	1	288.5	85	22	282918.2
17	AGR_METH	AGR Methanol Wash Column	1	1	288.5	235	4	283091.7
18	LOX_TANK	LOx Tank	1	1	288.5	90	8	282870.4
19	DEMIN1	Demineraized Storage Tank 1	1	1	288.5	45	4	282965.9
20	DEMIN2	Demineraized Storage Tank 2	1	1	288.5	45	4	282965.9

Downwash Structures

HECA

Buildings

	Building Name	Corner 1 North (Y) (m)	Corner 2 East (X) (m)	Corner 2 North (Y) (m)	Corner 3 East (X) (m)	Corner 3 North (Y) (m)	Corner 4 East (X) (m)	Corner 4 North (Y) (m)
1	FINESLAG	3912479.6	283205.3	3912480	283205.2	3912428	283221.5	3912428
2	SLRYPREP	3912325.7	283175.6	3912324.7	283175.5	3912280	283147.7	3912280
3	GASIFIER	3912352.1	283233	3912348.9	283233.2	3912283	283202.9	3912282
4	AGR	3912194.1	283132	3912169.3	283122.3	3912170	283122.7	3912194
5	CO2	3912117	283148.7	3912086.7	283118.1	3912087	283118.6	3912117
6	ASU_COOL	3912012	282944.5	3912011.3	282944.5	3911993	282883.8	3911993
7	STG	3912173.3	282861.6	3912173.1	282861.5	3912177	282869.2	3912177
8	CTG	3912218.2	282855.5	3912218.1	282858	3912216	282873.1	3912216
9	HRSG	3912219.4	282934.6	3912199.7	282909.9	3912201	282906.3	3912221
10	KO_DRUM	3912303.9	283066.5	3912303.3	283065.9	3912281	283056.5	3912281
11	PWR_COOL	3912009.6	283282.8	3912006.9	283282	3911989	283023.6	3911991
12	ASU_COMP	3912076.4	282928.5	3912076.4	282928.6	3912063	282892.7	3912063
13	AUX_BOIL	3912285.6	282913.8	3912261.7	282954.5	3912261	282954.5	3912285
14	EMER_GN1	3912178.4	282948.7	3912178.3	282948.5	3912174	282933.3	3912174
15	EMER_GN2	3912169.2	282948.4	3912169	282948.5	3912165	282933.4	3912165
16	AIR_SEP	3912110.2	282921.3	3912110	282922.8	3912114	282931.3	3912115
17	AGR_METH	3912224	283109.7	3912223.8	283109.7	3912209	283091.3	3912209
18	LOX_TANK	3912113.7	282874.5	3912117.8	282880.2	3912118	282884.3	3912114
19	DEMIN1	3912233.9	282970.3	3912234	282970.5	3912222	282966	3912221
20	DEMIN2	3912215	282970.4	3912214.6	282970.4	3912202	282965.8	3912202

Downwash Structures

HECA

Buildings

	Building Name	Corner 5 East (X) (m)	Corner 5 North (Y) (m)	Corner 6 East (X) (m)	Corner 6 North (Y) (m)	Corner 7 East (X) (m)	Corner 7 North (Y) (m)	Corner 8 East (X) (m)	Corner 8 North (Y) (m)	Corner 9 East (X) (m)	Corner 9 North (Y) (m)
1	FINESLAG										
2	SLRYPREP										
3	GASIFIER										
4	AGR										
5	CO2										
6	ASU_COOL										
7	STG	282869.3	3912173	282889	3912173	282889	3912164	282869.1	3912164	282869.2	3912160
8	CTG	282889.6	3912215	282889.5	3912208	282872.9	3912207	282857.7	3912207	282855.4	3912204
9	HRSG										
10	KO_DRUM	283044.7	3912282	283034.7	3912283	283035.4	3912303	283044.4	3912303		
11	PWR_COOL										
12	ASU_COMP										
13	AUX_BOIL										
14	EMER_GN1										
15	EMER_GN2										
16	AIR_SEP	282931.5	3912113	282934.7	3912113	282934.9	3912109	282937.8	3912108	282943.7	3912111
17	AGR_METH										
18	LOX_TANK	282884.3	3912108	282880	3912104	282874.3	3912104	282870.2	3912108		
19	DEMIN1										
20	DEMIN2										

Downwash Structures

HECA

Buildings

	Building Name	Corner 10 East (X) (m)	Corner 10 North (Y) (m)	Corner 11 East (X) (m)	Corner 11 North (Y) (m)	Corner 12 East (X) (m)	Corner 12 North (Y) (m)	Corner 13 East (X) (m)	Corner 13 North (Y) (m)	Corner 14 East (X) (m)	Corner 14 North (Y) (m)
1	FINESLAG										
2	SLRYPREP										
3	GASIFIER										
4	AGR										
5	CO2										
6	ASU_COOL										
7	STG	282861.4	3912160	282861.2	3912164	282850.9	3912164				
8	CTG	282851.2	3912205								
9	HRSG										
10	KO_DRUM										
11	PWR_COOL										
12	ASU_COMP										
13	AUX_BOIL										
14	EMER_GN1										
15	EMER_GN2										
16	AIR_SEP	282955.1	3912109	282954.9	3912104	282949.9	3912104	282943.7	3912102	282939.4	3912103
17	AGR_METH										
18	LOX_TANK										
19	DEMIN1										
20	DEMIN2										

Downwash Structures

HECA

Buildings

	Building Name	Corner 15 East (X) (m)	Corner 15 North (Y) (m)	Corner 16 East (X) (m)	Corner 16 North (Y) (m)	Corner 17 East (X) (m)	Corner 17 North (Y) (m)	Corner 18 East (X) (m)	Corner 18 North (Y) (m)	Corner 19 East (X) (m)	Corner 19 North (Y) (m)
1	FINESLAG										
2	SLRYPREP										
3	GASIFIER										
4	AGR										
5	CO2										
6	ASU_COOL										
7	STG										
8	CTG										
9	HRSG										
10	KO_DRUM										
11	PWR_COOL										
12	ASU_COMP										
13	AUX_BOIL										
14	EMER_GN1										
15	EMER_GN2										
16	AIR_SEP	282934.8	3912101	282934.8	3912099	282934.7	3912096	282932.7	3912096	282931.1	3912099
17	AGR_METH										
18	LOX_TANK										
19	DEMIN1										
20	DEMIN2										

Downwash Structures

HECA

Buildings

	Building Name	Corner 20 East (X) (m)	Corner 20 North (Y) (m)	Corner 21 East (X) (m)	Corner 21 North (Y) (m)	Corner 22 East (X) (m)	Corner 22 North (Y) (m)
1	FINESLAG						
2	SLRYPREP						
3	GASIFIER						
4	AGR						
5	CO2						
6	ASU_COOL						
7	STG						
8	CTG						
9	HRSG						
10	KO_DRUM						
11	PWR_COOL						
12	ASU_COMP						
13	AUX_BOIL						
14	EMER_GN1						
15	EMER_GN2						
16	AIR_SEP	282922	3912099	282921.1	3912102	282918.1	3912102
17	AGR_METH						
18	LOX_TANK						
19	DEMIN1						
20	DEMIN2						

Downwash Structures

HECA

Tanks

	Tank Name	Description	Base Elevation (ft)	Center East (X) (m)	Center North (Y) (m)	Tank Height (ft)	Tank Diameter (ft)
1	PROC_WTR	Process Water Treatment Feed Tank	288.5	283173.3	3912429.9	32	35
2	GREY_WTR	Grey Water Tank	288.5	283158.5	3912414.5	40	30
3	SETTLER	Settler	288.5	283184.2	3912394.2	35	85
4	SLURTK_N	Slurry Run Tank - N	288.5	283184	3912318	75	38
5	SLURTK_S	Slurry Run Tank - S	288.5	283183.4	3912301.5	75	38
6	SOUR_WTR	Sour Water Stripper Feed Tank	288.5	283022.5	3912123.8	32	48
7	CONDENSA	Condensate Storage Tank	288.5	282957	3912249.6	24	34
8	FIREWATR	Firewater Storage Tank	288.5	282758.5	3912509.6	48	110
9	RAWWATER	Raw Water Tank	288.5	282850.6	3912507.3	48	100
10	TREATD_W	Treated Water Tank	288.5	282857.4	3912461.7	40	90
11	SILO_W	Feedstock Storage Silos - West	288.5	283261.6	3912671.8	150	80
12	SILO_C	Feedstock Storage Silos - Central	288.5	283290.1	3912671.4	150	80
13	SILO_E	Feedstock Storage Silos - East	288.5	283316.9	3912670.5	150	80
14	METHNL	Methanol Storage Tank	288.5	283115.2	3912061.2	40	40
15	AIR_CAN	Air Separation Can	288.5	282943.5	3912106.5	205	33
16	DEMINERA	Demineraized Storage Tank	288.5	282857.3	3912364.3	40	60
17	PURH2O_1	Purified Water Tank	288.5	282857.4	3912424.4	48	90
18	PURH2O_2	Purified Water Tank	288.5	282839.4	3912395.2	48	42.5
19	PURH2O_3	Purified Water Tank	288.5	282865.6	3912395.5	32	35
20	WATERT_N	Water Treatment Tank North	288.5	282761	3912394.8	48	120
21	WATERT_S	Water Treatment Tank South	288.5	282760.9	3912346.9	48	120

REVISED PORTIONS OF APPENDIX C4
CALMET/CALPUFF AIR QUALITY MODELING RESULTS

REVISED PORTIONS OF APPENDIX C4: CALMET/CALPUFF AIR QUALITY MODELING IMPACT ANALYSIS FOR FAR-FIELD CLASS I AREAS

The tables listed below have been revised to reflect the elimination of the GE LMS100® auxiliary combustion turbine generator (CTG) and the reduction of PM_{10} and $PM_{2.5}$ emission rates from the GE Frame 7B CTG/Heat Recovery System Generator (HRSG) when firing hydrogen-rich fuel. The remaining portions of Appendix C4 are unchanged.

Revised List of Tables

Revised Table 2	Maximum Emission Rates of Each Averaging Time Period
Revised Table 3	Source Location and Parameters
Revised Table 4	3-hour Averaged Emission Inventory for CALPUFF (3-hour SO_2 Increment Analysis)
Revised Table 5	24-hour Averaged Emission Inventory for CALPUFF (24-hour NO_x, SO_2, and PM_{10} Increment and Visibility Analyses)
Revised Table 6	Annual Averaged Emission Inventory for CALPUFF (Annual NO_x, SO_2, and PM_{10} Increment and Deposition Analyses)
Revised Table 8	PSD Class I Increment Significance Analysis – CALPUFF Results
Revised Table 9	Visibility Analysis – CALPUFF Results
Revised Table 10	Total Nitrogen and Sulfur Deposition Analysis – CALPUFF Results

Revised Table 2
Maximum Emission Rates of Each Averaging Time Period

Source	3-hr (g/s)	24-hr (g/s)			Annual (g/s)		
	SO_2	NO_X	SO_2	PM_{10}	NO_X	SO_2	PM_{10}
ASUCOOL1	-	-	-	0.0285	-	-	0.0271
ASUCOOL2	-	-	-	0.0285	-	-	0.0271
ASUCOOL3	-	-	-	0.0285	-	-	0.0271
ASUCOOL4	-	-	-	0.0285	-	-	0.0271
PWCOOL1	-	-	-	0.0382	-	-	0.0363
PWCOOL2	-	-	-	0.0382	-	-	0.0363
PWCOOL3	-	-	-	0.0382	-	-	0.0363
PWCOOL4	-	-	-	0.0382	-	-	0.0363
PWCOOL5	-	-	-	0.0382	-	-	0.0363
PWCOOL6	-	-	-	0.0382	-	-	0.0363
PWCOOL7	-	-	-	0.0382	-	-	0.0363
PWCOOL8	-	-	-	0.0382	-	-	0.0363
PWCOOL9	-	-	-	0.0382	-	-	0.0363
PWCOOL10	-	-	-	0.0382	-	-	0.0363
PWCOOL11	-	-	-	0.0382	-	-	0.0363
PWCOOL12	-	-	-	0.0382	-	-	0.0363
PWCOOL13	-	-	-	0.0382	-	-	0.0363
GASCOOL1	-	-	-	0.0300	-	-	0.0285
GASCOOL2	-	-	-	0.0300	-	-	0.0285
GASCOOL3	-	-	-	0.0300	-	-	0.0285
GASCOOL4	-	-	-	0.0300	-	-	0.0285
EMERGEN1 [a]	0.0024	0.0324	0.0003	0.0017	0.0022	0.00002	0.0001
EMERGEN2 [a]	-	-	-	-	-	-	-
HRSGSTK	0.9302	6.5718	0.9302	2.4947	4.8092	0.8394	2.3698
FIREPUMP	0.0005	0.0193	0.0001	0.0002	0.0026	0.000008	0.000026
AUX_BOIL [b]	-	-	-	-	0.0492	0.0091	0.0224
TAIL_TO	0.2546	0.6048	0.2546	0.0202	0.3128	0.2521	0.0104
CO_2_VENT	-	-	-	-	-	-	-
SRUFLARE	2.1933	0.0720	0.2742	0.0018	0.0049	0.0016	0.0001
GF_FLARE	0.0001	7.9380	0.0001	0.0002	0.1239	0.0001	0.0002
GASVENTA [c]	-	-	-	-	-	-	-
GASVENTB [c]	0.0046	0.2495	0.0046	0.0181	0.0513	0.0010	0.0037
GASVENTC [c]	-	-	-	-	-	-	-
DC1	-	-	-	0.0301	-	-	0.0058
DC2	-	-	-	0.0761	-	-	0.0147
DC3	-	-	-	0.0411	-	-	0.0363
DC4	-	-	-	0.0263	-	-	0.0232
DC5	-	-	-	0.0252	-	-	0.0223
DC6	-	-	-	0.0027	-	-	0.0004
RC_FLARE	0.0001	0.0045	0.0001	0.0001	0.0045	0.0001	0.0001

Notes:

a The analysis also assumed that all emissions from two emergency generators are released to the emergency generator 1, which has worst dispersion characteristics.

b. Auxiliary boiler is not fired at the same time that the HRSG is operating.

c. There are three gasifiers. Only one gasifier warming will be operated at any one time. The emission is from GASVENTB, which results worst impact among three gasifiers.

Revised Table 3
Source Location and Parameters

Source ID	Source Description	UTM Easting	UTM Northing	LCC X	LCC Y	Base Elevation	Stack Height	Stack Temperature	Stack Velocity	Stack Diameter
		(m)	(m)	(km)	(km)	(m)	(m)	(k)	(m/s)	(m)
ASUCOOL1	ASU Cooling Tower	282891.3	3912002.1	23.21883	30.06171	87.93	16.76	299.9	7.98	9.14
ASUCOOL2	ASU Cooling Tower	282906.2	3912002.4	23.23371	30.06243	87.93	16.76	299.9	7.98	9.14
ASUCOOL3	ASU Cooling Tower	282922.2	3912002.1	23.24975	30.06254	87.93	16.76	299.9	7.98	9.14
ASUCOOL4	ASU Cooling Tower	282937.3	3912001.4	23.26486	30.06224	87.93	16.76	299.9	7.98	9.14
PWCOOL1	Power Block Cooling Tower	283031.9	3912001.1	23.35941	30.06445	87.93	16.76	299.9	7.98	9.14
PWCOOL2	Power Block Cooling Tower	283046.3	3912000.9	23.37385	30.06469	87.93	16.76	299.9	7.98	9.14
PWCOOL3	Power Block Cooling Tower	283061.6	3912001.0	23.38915	30.06519	87.93	16.76	299.9	7.98	9.14
PWCOOL4	Power Block Cooling Tower	283076.9	3912000.0	23.40443	30.06463	87.93	16.76	299.9	7.98	9.14
PWCOOL5	Power Block Cooling Tower	283092.1	3912000.0	23.4196	30.06494	87.93	16.76	299.9	7.98	9.14
PWCOOL6	Power Block Cooling Tower	283107.9	3912000.0	23.4354	30.06545	87.93	16.76	299.9	7.98	9.14
PWCOOL7	Power Block Cooling Tower	283122.7	3911999.4	23.45019	30.06518	87.93	16.76	299.9	7.98	9.14
PWCOOL8	Power Block Cooling Tower	283137.8	3911999.3	23.46529	30.06555	87.93	16.76	299.9	7.98	9.14
PWCOOL9	Power Block Cooling Tower	283153.5	3911999.5	23.481	30.06609	87.93	16.76	299.9	7.98	9.14
PWCOOL10	Power Block Cooling Tower	283168.8	3911999.2	23.49627	30.06622	87.93	16.76	299.9	7.98	9.14
PWCOOL11	Power Block Cooling Tower	283183.7	3911999.6	23.51118	30.06702	87.93	16.76	299.9	7.98	9.14
PWCOOL12	Power Block Cooling Tower	283199.5	3911999.0	23.52698	30.0669	87.93	16.76	299.9	7.98	9.14
PWCOOL13	Power Block Cooling Tower	283275.2	3911998.1	23.60261	30.068	87.93	16.76	299.9	7.98	9.14
GASCOOL1	Gasification Cooling Tower	283214.6	3911999.4	23.54206	30.06768	87.93	16.76	299.9	7.98	9.14
GASCOOL2	Gasification Cooling Tower	283228.6	3911998.4	23.5561	30.06699	87.93	16.76	299.9	7.98	9.14
GASCOOL3	Gasification Cooling Tower	283244.7	3911998.9	23.57215	30.06791	87.93	16.76	299.9	7.98	9.14
GASCOOL4	Gasification Cooling Tower	283259.1	3911998.1	23.5866	30.06755	87.93	16.76	299.9	7.98	9.14
EMERGEN1	Emergency Generator1	282948.3	3912172.0	23.2713	30.23302	87.93	6.10	677.6	67.38	0.37
EMERGEN2	Emergency Generator2	282948.3	3912172.0	23.2713	30.23302	87.93	6.10	677.6	67.38	0.37
HRSGSTK	HRSG Stack	282940	3912211.5	23.262	30.27232	87.93	65.00	344.3	11.55	6.10
FIREPUMP	Fire Water Pump Diesel Engine	282770.9	3912535.5	23.08432	30.59164	87.93	6.10	727.6	47.52	0.21
AUX_BOIL	Auxiliary Boiler	282955.1	3912273.0	23.27539	30.33414	87.93	24.38	422.0	9.20	1.37
TAIL_TO	Tail Gas Thermal Oxidizer	283049.1	3912112.7	23.37362	30.1765	87.93	50.29	922.0	7.45	0.76

Revised Table 3
Source Location and Parameters (Continued)

Source ID	Source Description	UTM Easting	UTM Northing	LCC X	LCC Y	Base Elevation	Stack Height	Stack Temperature	Stack Velocity	Stack Diameter
		(m)	(m)	(km)	(km)	(m)	(m)	(k)	(m/s)	(m)
CO_2_VENT	CO_2 Vent	283045.7	3912389.7	23.36286	30.45327	87.93	79.25	291.5	55.92	1.07
SRUFLARE	SRU Flare	283042.4	3912097.7	23.36739	30.16128	87.93	76.20	1273.0	20.00	1.09
GF_FLARE	Gasification Flare	283064.5	3912472.6	23.37946	30.53658	87.93	76.20	1273.0	20.00	5.47
GASVENTA	Gasifier Warming Vent A	283212.7	3912342.0	23.531	30.41005	87.93	64.01	338.7	26.39	0.30
GASVENTB	Gasifier Warming Vent B	283211.7	3912316.6	23.53075	30.38457	87.93	64.01	338.7	26.39	0.30
GASVENTC	Gasifier Warming Vent C	283211.2	3912291.0	23.53085	30.35898	87.93	64.01	338.7	26.39	0.30
DC1	FeedStock-DustCollection	283365.3	3913058.7	23.6644	31.13031	87.93	13.87	291.9	15.06	0.51
DC2	FeedStock-DustCollection	283356.0	3912740.9	23.66358	30.81248	87.93	51.97	291.9	14.90	0.81
DC3	FeedStock-DustCollection	283150.4	3912310.2	23.46956	30.37655	87.93	53.79	291.9	14.66	0.56
DC4	FeedStock-DustCollection	283298.0	3912740.9	23.60564	30.81094	87.93	51.97	291.9	15.70	0.43
DC5	FeedStock-DustCollection	283150.4	3912749.0	23.45789	30.81511	87.93	24.23	291.9	15.06	0.43
DC6	FeedStock-DustCollection	283149.9	3912324.5	23.46876	30.39085	87.93	53.79	291.9	14.19	0.23
RC_FLARE	Rectisol Flare	283064.7	3912479.1	23.3795	30.54304	87.93	76.20	1273.0	20.00	0.10

Notes:
Assumed that the temperature of cooling tower is 8 degrees Kelvin degree higher than the annual averaged temperature value from the AERMET meteorological data at Bakersfield monitoring station.
Assumed that the temperature of dust collection is the annual averaged value from the AERMET meteorological data at Bakersfield monitoring station.

K = Kelvin
km = kilometer
LCC = Lambert Conformal Conic
m = meter
m/s = meters per second
UTM = Universal Transverse Mercator

Revised Table 4
3-Hour Averaged Emission Inventory for CALPUFF (3-Hour SO_2 Increment Analysis)

Sources (g/s)	SO_2	SO_4	NO_x	HNO_3	NO_3	INCPM	PM_{10}	SOA						EC
								PM0005	PM0010	PM0015	PM0020	PM0025	PM0100	
EMERGEN1	2.35E-03	-	3.89E-01	-	-	1.69E-03	1.69E-03	-	-	-	-	-	-	-
HRSGSTK	6.20E-01	4.65E-01	2.10E+01	-	-	2.49E+00	-	2.11E-01	3.51E-01	3.23E-01	2.11E-01	1.55E-01	1.55E-01	6.24E-01
FIREPUMP	4.70E-04	-	2.32E-01	-	-	1.93E-04	1.93E-04	-	-	-	-	-	-	-
TAIL_TO	2.55E-01	-	6.05E-01	-	-	2.02E-02	2.02E-02	-	-	-	-	-	-	-
SRUFLARE	2.19E+00	-	5.44E-01	-	-	1.80E-03	1.80E-03	-	-	-	-	-	-	-
GF_FLARE	1.29E-04	-	7.94E+00	-	-	1.89E-04	1.89E-04	-	-	-	-	-	-	-
GASVENTB	4.63E-03	-	2.49E-01	-	-	1.81E-02	1.81E-02	-	-	-	-	-	-	-
RC_FLARE	7.72E-05	-	4.54E-03	-	-	1.13E-04	1.13E-04	-	-	-	-	-	-	-

Notes:
(g/s) = grams per second
EC = Elemental Carbon
HNO_3 = nitric acid
INCPM = total particulate matter emission
NOx = oxides of nitrogen
NO_3 = nitrate
PM0005 = particulate matter 0.05 microns or less in diameter
PM0010 = particulate matter 0.1 microns or less in diameter
PM0015 = particulate matter 0.15 microns or less in diameter
PM0020 = particulate matter 0.2 microns or less in diameter
PM0025 = particulate matter 0.25 microns or less in diameter
PM0100 = particulate matter 1 microns or less in diameter
PM_{10} = particulate matter 10 microns or less in diameter
SO_2 = sulfur dioxide
SO_4 = sulfate compound
SOA = Secondary Organic Aerosol

Revised Table 5
24-hour Averaged Emission Inventory for CALPUFF (24-hour NO_x, SO_2, and PM_{10} Increment and Visibility Analyses)

Sources								SOA						
(g/s)	SO_2	SO_4	NO_x	HNO_3	NO_3	INCPM	PM_{10}	PM0005	PM0010	PM0015	PM0020	PM0025	PM0100	EC
ASUCOOL1	-	-	-	-	-	2.85E-02	2.85E-02	-	-	-	-	-	-	-
ASUCOOL2	-	-	-	-	-	2.85E-02	2.85E-02	-	-	-	-	-	-	-
ASUCOOL3	-	-	-	-	-	2.85E-02	2.85E-02	-	-	-	-	-	-	-
ASUCOOL4	-	-	-	-	-	2.85E-02	2.85E-02	-	-	-	-	-	-	-
PWCOOL1	-	-	-	-	-	3.82E-02	3.82E-02	-	-	-	-	-	-	-
PWCOOL2	-	-	-	-	-	3.82E-02	3.82E-02	-	-	-	-	-	-	-
PWCOOL3	-	-	-	-	-	3.82E-02	3.82E-02	-	-	-	-	-	-	-
PWCOOL4	-	-	-	-	-	3.82E-02	3.82E-02	-	-	-	-	-	-	-
PWCOOL5	-	-	-	-	-	3.82E-02	3.82E-02	-	-	-	-	-	-	-
PWCOOL6	-	-	-	-	-	3.82E-02	3.82E-02	-	-	-	-	-	-	-
PWCOOL7	-	-	-	-	-	3.82E-02	3.82E-02	-	-	-	-	-	-	-
PWCOOL8	-	-	-	-	-	3.82E-02	3.82E-02	-	-	-	-	-	-	-
PWCOOL9	-	-	-	-	-	3.82E-02	3.82E-02	-	-	-	-	-	-	-
PWCOOL10	-	-	-	-	-	3.82E-02	3.82E-02	-	-	-	-	-	-	-
PWCOOL11	-	-	-	-	-	3.82E-02	3.82E-02	-	-	-	-	-	-	-
PWCOOL12	-	-	-	-	-	3.82E-02	3.82E-02	-	-	-	-	-	-	-
PWCOOL13	-	-	-	-	-	3.82E-02	3.82E-02	-	-	-	-	-	-	-
GASCOOL1	-	-	-	-	-	3.00E-02	3.00E-02	-	-	-	-	-	-	-
GASCOOL2	-	-	-	-	-	3.00E-02	3.00E-02	-	-	-	-	-	-	-
GASCOOL3	-	-	-	-	-	3.00E-02	3.00E-02	-	-	-	-	-	-	-
GASCOOL4	-	-	-	-	-	3.00E-02	3.00E-02	-	-	-	-	-	-	-
EMERGEN1	2.94E-04	-	3.24E-02	-	-	1.69E-03	1.69E-03	-	-	-	-	-	-	-
HRSGSTK	6.20E-01	4.65E-01	6.57E+00	-	-	2.49E+00	-	2.11E-01	3.51E-01	3.23E-01	2.11E-01	1.55E-01	1.55E-01	6.24E-01
FIREPUMP	5.88E-05	-	1.93E-02			1.93E-04	1.93E-04							
TAIL_TO	2.55E-01	-	6.05E-01	-	-	2.02E-02	2.02E-02	-	-	-	-	-	-	-
SRUFLARE	2.74E-01	-	7.20E-02	-	-	1.80E-03	1.80E-03	-	-	-	-	-	-	-
GF_FLARE	1.29E-04	-	7.94E+00	-	-	1.89E-04	1.89E-04	-	-	-	-	-	-	-
GASVENTB	4.63E-03	-	2.49E-01	-	-	1.81E-02	1.81E-02	-	-	-	-	-	-	-
DC1	-	-	-	-	-	3.01E-02	3.01E-02	-	-	-	-	-	-	-
DC2	-	-	-	-	-	7.61E-02	7.61E-02	-	-	-	-	-	-	-
DC3	-	-	-	-	-	4.11E-02	4.11E-02	-	-	-	-	-	-	-
DC4	-	-	-	-	-	2.63E-02	2.63E-02	-	-	-	-	-	-	-
DC5	-	-	-	-	-	2.52E-02	2.52E-02	-	-	-	-	-	-	-
DC6	-	-	-	-	-	2.67E-03	2.67E-03	-	-	-	-	-	-	-
RC_FLARE	7.72E-05	-	4.54E-03	-	-	1.13E-04	1.13E-04	-	-	-	-	-	-	-

Notes:
(g/s) = grams per second
EC = Elemental Carbon
HNO_3 = nitric acid
INCPM = total particulate matter emission
NO_x = oxides of nitrogen
NO_3 = nitrate
PM0005 = particulate matter 0.05 microns or less in diameter
PM0010 = particulate matter 0.1 microns or less in diameter
PM0015 = particulate matter 0.15 microns or less in diameter
PM0020 = particulate matter 0.2 microns or less in diameter
PM0025 = particulate matter 0.25 microns or less in diameter
PM0100 = particulate matter 1 microns or less in diameter
PM_{10} = particulate matter 10 microns or less in diameter
SO_2 = sulfur dioxide
SO_4 = sulfate compound
SOA = Secondary Organic Aerosol

Revised Table 6
Annual Averaged Emission Inventory for CALPUFF (Annual NO_x, SO_2, and PM_{10} Increment and Deposition Analyses)

Sources (g/s)	SO_2	SO_4	NO_x	HNO_3	NO_3	INCPM	PM_{10}	PM0005	PM0010	PM0015	SOA	PM0025	PM0100	EC
ASUCOOL1	-	-	-	-	-	2.71E-02	2.71E-02	-	-	-	-	-	-	-
ASUCOOL2	-	-	-	-	-	2.71E-02	2.71E-02	-	-	-	-	-	-	-
ASUCOOL3	-	-	-	-	-	2.71E-02	2.71E-02	-	-	-	-	-	-	-
ASUCOOL4	-	-	-	-	-	2.71E-02	2.71E-02	-	-	-	-	-	-	-
PWCOOL1	-	-	-	-	-	3.63E-02	3.63E-02	-	-	-	-	-	-	-
PWCOOL2	-	-	-	-	-	3.63E-02	3.63E-02	-	-	-	-	-	-	-
PWCOOL3	-	-	-	-	-	3.63E-02	3.63E-02	-	-	-	-	-	-	-
PWCOOL4	-	-	-	-	-	3.63E-02	3.63E-02	-	-	-	-	-	-	-
PWCOOL5	-	-	-	-	-	3.63E-02	3.63E-02	-	-	-	-	-	-	-
PWCOOL6	-	-	-	-	-	3.63E-02	3.63E-02	-	-	-	-	-	-	-
PWCOOL7	-	-	-	-	-	3.63E-02	3.63E-02	-	-	-	-	-	-	-
PWCOOL8	-	-	-	-	-	3.63E-02	3.63E-02	-	-	-	-	-	-	-
PWCOOL9	-	-	-	-	-	3.63E-02	3.63E-02	-	-	-	-	-	-	-
PWCOOL10	-	-	-	-	-	3.63E-02	3.63E-02	-	-	-	-	-	-	-
PWCOOL11	-	-	-	-	-	3.63E-02	3.63E-02	-	-	-	-	-	-	-
PWCOOL12	-	-	-	-	-	3.63E-02	3.63E-02	-	-	-	-	-	-	-
PWCOOL13	-	-	-	-	-	3.63E-02	3.63E-02	-	-	-	-	-	-	-
GASCOOL1	-	-	-	-	-	2.85E-02	2.85E-02	-	-	-	-	-	-	-
GASCOOL2	-	-	-	-	-	2.85E-02	2.85E-02	-	-	-	-	-	-	-
GASCOOL3	-	-	-	-	-	2.85E-02	2.85E-02	-	-	-	-	-	-	-
GASCOOL4	-	-	-	-	-	2.85E-02	2.85E-02	-	-	-	-	-	-	-
EMERGEN1	2.01E-05	-	2.22E-03	-	-	1.15E-04	1.15E-04	-	-	-	-	-	-	-
HRSGSTK	5.60E-01	4.20E-01	4.81E+00	-	-	2.37E+00	-	2.04E-01	3.39E-01	3.12E-01	2.04E-01	1.49E-01	1.49E-01	5.92E-01
FIREPUMP	8.05E-06	-	2.64E-03	-	-	2.64E-05	2.64E-05	-	-	-	-	-	-	-
AUX_BOIL	9.13E-03	-	4.92E-02	-	-	2.24E-02	2.24E-02	-	-	-	-	-	-	-
TAIL_TO	2.52E-01	-	3.13E-01	-	-	1.04E-02	1.04E-02	-	-	-	-	-	-	-
SRUFLARE	1.58E-03	-	4.91E-03	-	-	1.23E-04	1.23E-04	-	-	-	-	-	-	-
GF_FLARE	1.29E-04	-	1.24E-01	-	-	1.89E-04	1.89E-04	-	-	-	-	-	-	-
GASVENTB	9.51E-04	-	5.13E-02	-	-	3.73E-03	3.73E-03	-	-	-	-	-	-	-
DC1	-	-	-	-	-	5.82E-03	5.82E-03	-	-	-	-	-	-	-
DC2	-	-	-	-	-	1.47E-02	1.47E-02	-	-	-	-	-	-	-
DC3	-	-	-	-	-	3.63E-02	3.63E-02	-	-	-	-	-	-	-
DC4	-	-	-	-	-	2.32E-02	2.32E-02	-	-	-	-	-	-	-
DC5	-	-	-	-	-	2.23E-02	2.23E-02	-	-	-	-	-	-	-
DC6	-	-	-	-	-	4.00E-04	4.00E-04	-	-	-	-	-	-	-
RC_FLARE	7.72E-05	-	4.54E-03	-	-	1.13E-04	1.13E-04	-	-	-	-	-	-	-

Notes:
(g/s) = grams per second
EC = Elemental Carbon
HNO_3 = nitric acid
INCPM = total particulate matter emission
NO_x = oxides of nitrogen
NO_3 = nitrate
PM0005 = particulate matter 0.05 microns or less in diameter
PM0010 = particulate matter 0.1 microns or less in diameter
PM0015 = particulate matter 0.15 microns or less in diameter
PM0020 = particulate matter 0.2 microns or less in diameter
PM0025 = particulate matter 0.25 microns or less in diameter
PM0100 = particulate matter 1 microns or less in diameter
PM_{10} = particulate matter 10 microns or less in diameter
SO_2 = sulfur dioxide
SO_4 = sulfate compound
SOA = Secondary Organic Aerosol

Revised Table 8
PSD Class I Increment Significance Analysis – CALPUFF Results

Class I Area	Pollutant	Annual NO_x	3-hr SO_2	24-hr SO_2	Annual SO_2	24-hr PM_{10}	Annual PM_{10}
	Unit	**µg/m^3**	**µg/m^3**	**µg/m^3**	**µg/m^3**	**µg/m^3**	**Annual**
	Threshold	**0.1**	**1**	**0.2**	**0.08**	**0.32**	**0.16**
San Rafael Wilderness Area	2001	3.77E-03	2.18E-01	2.53E-02	7.47E-04	8.65E-02	3.33E-03
	2002	4.08E-03	2.33E-01	2.56E-02	8.79E-04	7.67E-02	3.80E-03
	2003	4.23E-03	2.73E-01	2.75E-02	8.85E-04	9.29E-02	3.77E-03
Exceed?		No	No	No	No	No	No

Notes:
µg/m^3 = micrograms per cubic meter
NO_x = oxides of nitrogen
PM_{10} = particulate matter 10 microns or less in diameter
PSD = Prevention of Significant Deterioration
SO_2 = sulfur dioxide

Revised Table 9
Visibility Analysis – CALPUFF Results

Class I Area	Pollutant	No. of Days > 5%	No. of Days >10%	Max Extinction Change	Day of Maximum Extinction Change
	Unit	**Days**	**Days**	**%**	**Julian Day**
	Threshold	**0**	**0**	**10**	
San Rafael Wilderness Area	2001	1	0	8.09	308
	2002	3	0	6.56	287
	2003	1	0	5.41	247
Exceed?				No	

Revised Table 10
Total Nitrogen and Sulfur Deposition Analysis – CALPUFF Results

Class I Area	Pollutant	Deposition N	Deposition S
	Unit	**g/m^2/s**	**g/m^2/s**
	Threshold	**1.59E-11**	**1.59E-11**
San Rafael Wilderness Area	2001	9.52E-13	3.91E-13
	2002	1.19E-12	5.12E-13
	2003	1.21E-12	4.61E-13
Exceed?		No	No

REVISED APPENDIX D1.2
OPERATING EMISSIONS STATIONARY SOURCES

Modeling Parameters for Emission Sources — Summary

Hydrogen Energy, Inc — *10/7/2009*
HECA Amendment

Parameter		CTG/HRSG , H2-rich Fuel			CTG/HRSG , Natural Gas Fuel			CTG/HRSG Co-Firing **
		100% Load [2]	80% Load	60% Load	100% Load[3]	80% Load	60% Load	100% Load
English Units								
Stack height above grade[1]	ft	213	213	213	213	213	213	213
Stack diameter	ft	20	20	20	20	20	20	20
Stack outlet temperature	^{o}F	200	190	180	180	170	160	190
Stack exit flow, act	ft^3/s	19,900	16,300	13,400	16,700	14,300	11,900	18,300
Metric Units								
Stack height above grade[1]	m	65.0	65.0	65.0	65.0	65.0	65.0	65.0
Stack diameter	m	6.1	6.1	6.1	6.1	6.1	6.1	6.1
Stack outlet temperature	K	366.5	360.9	355.4	355.4	349.8	344.3	360.9
Stack exit flow, act	m^3/s	563.5	461.6	379.4	472.9	404.9	337.0	518.2
Stack Area	m^2	29.2	29.2	29.2	29.2	29.2	29.2	29.2
Stack exit velocity, act	m/s	19.3	15.8	13.0	16.2	13.9	11.5	17.8

Parameter		Aux Boiler	Gasification Flare(4)	SRU Flare(6)	Rectisol Flare (6)	Tail Gas Oxidizer[7]	Gasifier Warming Vent (ea.)	Cooling Towers (per cell)[5]	Diesel Generator (ea.)	Fire Pump Engine	CO_2 Vent
English Units											
Stack height above grade[1]	ft	80	250	250	250	165	210	55	20	20	260
Stack diameter	ft	4.5	9.8	2	1.3	2.5	1.0	30	1.2	0.7	3.5
Stack outlet temperature	^{o}F	300	(NA)	(NA)	(NA)	1200	150	75	760	850	65
Stack exit flow, act	ft^3/s	480	0.5/900	0.3/36	0.3	120	68	18,500	250	60	1,765
Metric Units											
Stack height above grade[1]	m	24.4	76.2	76.2	76.2	50.3	64.0	16.8	6.1	6.1	79.2
Stack diameter	m	1.4	3.0	0.6	0.4	0.8	0.3	9.1	0.4	0.2	1.1
Stack outlet temperature	K	422.0	n/a	n/a	n/a	922.0	338.7	297.0	677.6	727.6	291.5
Stack exit flow, act	m^3/s	13.6	0.01/25.49	0.01/1.02	0.01	3.4	1.9	523.9	7.1	1.7	50.0
Stack Area	m^2	1.5	7.0	0.3	0.1	0.5	0.1	65.7	0.1	0.0	0.9
Stack exit velocity, act	m/s	9.2	0.001/3.64	0.03/3.4	0.1	7.5	26.4	8.0	67.4	47.5	55.9

Notes:

(1) Minimum stack height assumed for worst-case dispersion.

(2) Volume Flow Value shown in table for H2-rich fuel is based on full load syn gas combustion (relatively constant for varying ambient temperatures). Duct firing of the HSRG changes the stack volumetric flow by about 1% or less.

(3) Full load stack flow for natural gas combustion will vary from the value shown in the table during warm summer ambient temperatures to about 18,000 act ft3/sec for winter ambient temperatures. Stack flow rates for co-firing of H2-rich gas and natural gas will range between the values shown for the two fuels separately.

(4) Based on gasifier startup; stack parameters estimated from a previous project, to be confirmed by current flare suppliers.

(5) Thirteen cells estimated for power block cooling tower; four cells estimated for process cooling tower, and four cells estimated for the ASU cooling tower.

(6) Waste gas heat release, 10^6 Btu/hr, HHV. First exit flow value is normal pilot gas, the second value is the maximum startup heat release (Rectisol Flare has no planned operation than standby with pilot on)

(7) Estimated oxidizer stack outlet flow for normal operating case of miscellaneous vent gas disposal; SRU startup case will be about 50% greater.

** HRSG Stack Cofiring is estimated assuming 47% Syngas and the balance natural gas

Parameter		Feed Stock - Dust Collection Units					
		DC-1	DC-2	DC-3	DC-4	DC-5	DC-6
English Units							
Ground elevation	ft	289	289	289	289	289	289
Stack elevation	ft	334	459	465	459	368	465
Stack height above grade	ft	46	171	177	171	80	177
Stack diameter	ft	1.7	2.7	1.8	1.4	1.4	0.8
Stack outlet temperature (1)	^{o}F	Ambient	Ambient	Ambient	Ambient	Ambient	Ambient
Stack exit flow, act	ft^3/s	108	273	127	81	78	21
Metric Units							
Stack height above grade	m	13.9	52.0	53.8	52.0	24.2	53.8
Stack diameter	m	0.5	0.8	0.6	0.4	0.4	0.2
Stack outlet temperature (1)	K	Ambient	Ambient	Ambient	Ambient	Ambient	Ambient
Stack exit flow, act	m^3/s	3.1	7.7	3.6	2.3	2.2	0.6
Stack Area	m^2	0.2	0.5	0.2	0.1	0.1	0.0
Stack exit velocity, act	m/s	15.1	14.9	14.7	15.7	15.1	14.2

(1) Assume ambient temperature

Total Project Modeling Emission Rates — Summary

Hydrogen Energy, Inc
HECA Amendment

10/7/2009

Modeling Worst-Case 1 hr Emissions

	CTG/HRSG Maximum (1)	Cooling Towers (2)			Auxiliary Boiler	Emergency Generators (3)	Fire Water Pump	Gasification Flare	SRU Flare	Rectisol Flare	Tg Thermal Oxidizer	CO_2 Vent	Gasifier (4)	Feedstock					
		Power Block	Process Area	ASU										DC-1	DC-2	DC-3	DC-4	DC-5	DC-6
	(g/sec)	(g/sec/cell)	(g/sec/cell)	(g/sec/cell)	(g/sec)	(g/sec/gen)	(g/sec)	(g/sec)	(g/sec)	(g/sec)	(g/sec)	(g/sec)	(g/sec)	(g/sec)	(g/sec)	(g/sec)	(g/sec)	(g/sec)	(g/sec)
NOx	21.0	--	--	--	0.2	0.4	0.2	7.9	0.544	0.005	0.6	--	0.2	--	--	--	--	--	--
CO	211.6	--	--	--	0.7	0.2	0.4	113.4	0.363	0.003	0.5	53.4	0.2	--	--	--	--	--	--
SO_2	0.9	--	--	--	0.04	0.004	0.0007	0.0001	2.19	0.0001	0.3	--	0.00	--	--	--	--	--	--
H_2S	--	--	--	--	--	--	--	--	--	--	--	0.6	--	--	--	--	--	--	--

(1) HRSG modeling emission rates represents the maximum emissions rate from a composite firing scenario (all three fuels)
(2) There are three separate cooling towers. The modeling rates are per cell.
(3) There are two separate generators. Modeling rates are shown per individual generator.
(4) There are three gasifiers. The modeling rate shown is per individual gasifier. However, only one gasifier warming will be operational at any one time.

Modeling Worst-Case 3 hr Emissions

	CTG/HRSG Maximum (1)	Cooling Towers (2)			Auxiliary Boiler	Emergency Generators (3)	Fire Water Pump	Gasification Flare	SRU Flare	Rectisol Flare	Tg Thermal Oxidizer	CO_2 Vent	Gasifier (4)	Feedstock					
		Power Block	Process Area	ASU										DC-1	DC-2	DC-3	DC-4	DC-5	DC-6
	(g/sec)	(g/sec/cell)	(g/sec/cell)	(g/sec/cell)	(g/sec)	(g/sec/gen)	(g/sec)	(g/sec)	(g/sec)	(g/sec)	(g/sec)	(g/sec)	(g/sec)	(g/sec)	(g/sec)	(g/sec)	(g/sec)	(g/sec)	(g/sec)
SO_2	0.9	--	--	--	0.04	0.002	0.0005	0.0001	2.19	0.00	0.3	--	0.00	--	--	--	--	--	--

(1) HRSG modeling emission rates represents the maximum emissions rate from a composite firing scenario (all three fuels)
(2) There are three separate cooling towers. The modeling rates are per cell.
(3) There are two separate generators. Modeling rates are shown per individual generator.
(4) There are three gasifiers. The modeling rate shown is per individual gasifier. However, only one gasifier warming will be operational at any one time.

Modeling Worst-Case 8 hr Emissions

	CTG/HRSG Maximum (1)	Cooling Towers (2)			Auxiliary Boiler	Emergency Generators (3)	Fire Water Pump	Gasification Flare	SRU Flare	Rectisol Flare	Tg Thermal Oxidizer	CO_2 Vent	Gasifier (4)	Feedstock					
		Power Block	Process Area	ASU										DC-1	DC-2	DC-3	DC-4	DC-5	DC-6
	(g/sec)	(g/sec/cell)	(g/sec/cell)	(g/sec/cell)	(g/sec)	(g/sec/gen)	(g/sec)	(g/sec)	(g/sec)	(g/sec)	(g/sec)	(g/sec)	(g/sec)	(g/sec)	(g/sec)	(g/sec)	(g/sec)	(g/sec)	(g/sec)
CO	164.9	--	--	--	0.7	0.06	0.1	113.4	0.138	0.003	0.5	53.4	0.2	--	--	--	--	--	--

(1) HRSG modeling emission rates represents the maximum emissions rate from a composite firing scenario (all three fuels)
(2) There are three separate cooling towers. The modeling rates are per cell.
(3) There are two separate generators. Modeling rates are shown per individual generator.
(4) There are three gasifiers. The modeling rate shown is per individual gasifier. However, only one gasifier warming will be operational at any one time.

Modeling Worst-Case 24 Hour Emission Rate

	CTG/HRSG Maximum (1)	Cooling Towers (2)			Auxiliary Boiler	Emergency Generators (3)	Fire Water Pump	Gasification Flare	SRU Flare	Rectisol Flare	Tg Thermal Oxidizer	CO_2 Vent	Gasifier (4)	Feedstock					
		Power Block	Process Area	ASU										DC-1	DC-2	DC-3	DC-4	DC-5	DC-6
	(g/sec)	(g/sec/cell)	(g/sec/cell)	(g/sec/cell)	(g/sec)	(g/sec/gen)	(g/sec)	(g/sec)	(g/sec)	(g/sec)	(g/sec)	(g/sec)	(g/sec)	(g/sec)	(g/sec)	(g/sec)	(g/sec)	(g/sec)	(g/sec)
SO_2	0.9	--	--	--	0.04	0.0003	0.0001	0.0001	0.2742	0.0001	0.3	--	0.00	--	--	--	--	--	--
PM_{10}	2.5	0.038	0.030	0.028	0.09	0.002	0.0002	0.0002	0.0018	0.0001	0.02	--	0.02	0.030	0.076	0.041	0.026	0.025	0.003
$PM_{2.5}$ (5)	2.5	0.023	0.018	0.017	0.09	0.002	0.0002	0.0002	0.0018	0.0001	0.02	--	0.02	0.009	0.022	0.012	0.008	0.007	0.001

(1) HRSG modeling emission rates represents the maximum emissions rate from a composite firing scenario (all three fuels)
(2) There are three separate cooling towers. The modeling rates are per cell.
(3) There are two separate generators. Modeling rates are shown per individual generator.
(4) There are three gasifiers. The modeling rate shown is per individual gasifier. However, only one gasifier warming will be operational at any one time.
(5) Where $PM_{10} = PM_{2.5}$, it is assumed that PM_{10} is 100% $PM_{2.5}$

Modeling Annual Average Emission Rate

	CTG/HRSG Maximum (1)	Cooling Towers (2)			Auxiliary Boiler	Emergency Generators (3)	Fire Water Pump	Gasification Flare	SRU Flare	Rectisol Flare	Tg Thermal Oxidizer	CO_2 Vent	Gasifier (4)	Feedstock					
		Power Block	Process Area	ASU										DC-1	DC-2	DC-3	DC-4	DC-5	DC-6
	(g/sec)	(g/sec/cell)	(g/sec/cell)	(g/sec/cell)	(g/sec)	(g/sec/gen)	(g/sec)	(g/sec)	(g/sec)	(g/sec)	(g/sec)	(g/sec)	(g/sec)	(g/sec)	(g/sec)	(g/sec)	(g/sec)	(g/sec)	(g/sec)
NO_X	4.8	--	--	--	0.05	0.002	0.003	0.1	0.005	0.005	0.3	--	0.05	--	--	--	--	--	--
CO	4.3	--	--	--	0.2	0.001	0.005	1.4	0.003	0.003	0.26	3.1	0.04194	--	--	--	--	--	--
VOC	0.9	--	--	--	0.02	0.0005	0.0002	0.0001	0.00005	0.00005	0.01	0.1	0.00326	--	--	--	--	--	--
SO_2	0.8	--	--	--	0.01	0.00002	0.00001	0.0001	0.0016	0.0001	0.3	--	0.00095	--	--	--	--	--	--
PM_{10}	2.4	0.036	0.028	0.027	0.02	0.0001	0.00003	0.0002	0.0001	0.0001	0.01	--	0.004	0.006	0.015	0.036	0.023	0.022	0.0004
$PM_{2.5}$ (5)	2.4	0.022	0.017	0.016	0.02	0.0001	0.00003	0.0002	0.0001	0.0001	0.01	--	0.004	0.002	0.004	0.011	0.0068	0.007	0.0001
H_2S	--	--	--	--	--	--	--	--	--	--	--	0.0	--	--	--	--	--	--	--

(1) HRSG modeling emission rates represents the maximum emissions rate from a composite firing scenario (all three fuels)
(2) There are three separate cooling towers. The modeling rates are per cell.
(3) There are two separate generators. Modeling rates are shown per individual generator.
(4) There are three gasifiers. The modeling rate shown is per individual gasifier. However, only one gasifier warming will be operational at any one time.
(5) Where $PM_{10} = PM_{2.5}$, it is assumed that PM_{10} is 100% $PM_{2.5}$

Total Annual Project Emissions — Emissions Summary

Hydrogen Energy, Inc — *10/7/2009*
HECA Amendment

Pollutant	Total Annual (ton/yr)	CTG/HRSG Maximum [1] (ton/yr)	Cooling Towers [2] (ton/yr)	Auxiliary Boiler (ton/yr)	Emergency Generators [3] (ton/yr)	Fire Water Pump (ton/yr)	Gasification Flare (ton/yr)	SRU Flare (ton/yr)	Rectisol Flare (ton/yr)	Tg Thermal Oxidizer (ton/yr)	CO_2 Vent (ton/yr)	Gasifier Warming (ton/yr)	Feedstock [4] (ton/yr)
NO_X	186.4	167.2	--	1.7	0.2	0.1	4.3	0.2	0.2	10.9	--	1.8	--
CO	322.7	150.2	--	5.8	0.1	0.2	48.8	0.1	0.1	9.1	106.9	1.5	--
VOC	36.1	32.5	--	0.6	0.03	0.01	0.003	0.002	0.002	0.3	2.4	0.1	--
SO_2	38.4	29.2	--	0.3	0.001	0.0003	0.004	0.055	0.003	8.8	--	0.03	--
PM_{10}	111.4	82.4	24.1	0.8	0.01	0.001	0.007	0.004	0.004	0.4	--	0.1	3.6
$PM_{2.5}$ [5]	99.2	82.4	14.5	0.8	0.01	0.001	0.007	0.004	0.004	0.4	--	0.1	1.0
NH_3	75.9	75.9	--	--	--	--	--	--	--	--	--	--	--
H_2S	1.3	--	--	--	--	--	--	--	--	--	1.3	--	--
CO_2e [6]	503,237	323,410	--	16,466	146	29	6,348	176	139	4,797	150,011	1,716	--

(1) Total annual HRSG emissions represents the maximum emissions rate from a composite firing scenario (all three fuels)
(2) Includes contributions from all three cooling towers
(3) Includes contributions from both emergency generators
(4) Feedstock emissions are shown as the contribution of all dust collection points.
(5) Where PM10 = PM2.5, it is assumed that PM10 is 100% PM2.5
(6) CO2e emission rates are shown as metric tons (tonnes)

CTG/HRSG Stack - Comparison of all Firing Scenarios — Emissions Summary

Hydrogen Energy, Inc — *10/7/2009*
HECA Amendment

Summary of CTG/HRSG Emission Rates Under the Three Different Firing Scenarios

Average Annual Emissions per Turbine	CTG/HRSG - Nat Gas (ton/yr/CT)	CTG/HRSG - Syn Gas (ton/yr/CT)	CTG/HRSG - Co Firing (ton/yr/CT)	Maximum (ton/yr/CT)
NO_X	148.0	167.2	162.9	167.2
CO	138.9	103.5	150.2	150.2
VOC	30.0	19.0	32.5	32.5
SO_2	20.0	28.4	29.2	29.2
$PM_{10} = PM_{2.5}$	74.9	82.4	82.4	82.4
NH_3	67.1	75.9	73.9	75.9

Modeling Worst-Case 1 hr Emissions per Turbine	CTG/HRSG - Nat Gas (g/sec/CT)	CTG/HRSG - Syn Gas (g/sec/CT)	CTG/HRSG - Co Firing (g/sec/CT)	Maximum (g/sec/CT)
NOx	21.0	21.0	21.0	21.0
CO	211.6	211.6	211.6	211.6
SO_2	0.6	0.86	0.93	0.9

Modeling Worst-Case 3 hr Emissions per Turbine	CTG/HRSG - Nat Gas (g/sec/CT)	CTG/HRSG - Syn Gas (g/sec/CT)	CTG/HRSG - Co Firing (g/sec/CT)	Maximum (g/sec/CT)
SO_2	0.6	0.86	0.93	0.9

Modeling Worst-Case 8 hr Emissions per Turbine	CTG/HRSG - Nat Gas (g/sec/CT)	CTG/HRSG - Syn Gas (g/sec/CT)	CTG/HRSG - Co Firing (g/sec/CT)	Maximum (g/sec/CT)
CO	164.9	164.8	164.9	164.9

Modeling Worst-Case 24 Hour Emission Rate	CTG/HRSG - Nat Gas (g/sec/CT)	CTG/HRSG - Syn Gas (g/sec/CT)	CTG/HRSG - Co Firing (g/sec/CT)	Maximum (g/sec/CT)
SO_2	0.6	0.86	0.93	0.9
$PM_{10} = PM_{2.5}$	2.4	2.5	2.5	2.5

Modeling Annual Average Emission Rate per Turbine	CTG/HRSG - Nat Gas (g/sec/CT)	CTG/HRSG - Syn Gas (g/sec/CT)	CTG/HRSG - Co Firing (g/sec/CT)	Maximum (g/sec/CT)
NO_X	4.3	4.8	4.7	4.8
CO	4.0	3.0	4.3	4.3
VOC	0.9	0.5	0.9	0.9
SO_2	0.6	0.82	0.84	0.8
$PM_{10} = PM_{2.5}$	2.2	2.4	2.4	2.4

CTG/HRSG Stack - Natural Gas

Emissions Summary

Hydrogen Energy, Inc
HECA Amendment

10/7/2009

CTG Operating Parameters

Ambient Temperature	UNITS	Winter Minimum - 20°F				Yearly Average- 65°F				Summer Maximum - 97°F			
CTG Load Level	Percent Load (%)	100%	100%	80%	60%	100%	100%	80%	60%	100%	100%	80%	60%
Evap Cooling Status	off / on	N/A	N/A	N/A	N/A	N/A	N/A	N/A	N/A	N/A	N/A	N/A	N/A
Duct Burner Status	off / on	On	Off	Off	Off	On	Off	Off	Off	On	Off	Off	Off

Average Emission Rates from CTG (lbs/hr/turbine) - Normal Operation

	UNITS	Winter Minimum - 20°F				Yearly Average- 65°F				Summer Maximum - 97°F			
NO_x (@ 4.0 ppm)	lbm/hr	36.3	29.0	24.8	20.8	35.1	27.0	23.1	19.4	33.3	26.1	22.4	18.7
CO (@ 5.0 ppm)	lbm/hr	27.6	22.1	18.8	15.8	26.7	20.5	17.6	14.8	25.3	19.8	17.0	14.2
VOC (@ 2.0 ppm)	lbm/hr	6.3	5.0	4.3	3.6	6.1	4.7	4.0	3.4	5.8	4.5	3.9	3.2
SO_2 (@ 12.65 ppmv)	lbm/hr	5.1	4.1	3.5	3.0	4.8	3.8	3.3	2.8	4.7	3.7	3.2	2.7
PM_{10} = $PM_{2.5}$	lbm/hr	18.0	18.0	18.0	18.0	18.0	18.0	18.0	18.0	18.0	18.0	18.0	18.0
NH_3 (@ 5.0 ppm slip)	lbm/hr	16.7	13.4	11.4	9.6	16.2	12.5	10.7	9.0	15.4	12.1	10.3	8.6

All turbine operating parameters and emissions data provided by FLUOR based on expected operating parameters.

Startup / Shutdown Emissions from Turbine (1CT)

Cold Startup			Hot Startup			Shutdown		
180 (min. in cold startup)	Max 1-hr. (lb/hr)	Total (lb/180min)	60 (min. in hot startup)	Max 1-hr. (lb/hr)	Total (lb/60min)	30 (min. in shutdown)	Max 1-hr. (lb/hr)	Total (lb/30min)
NO_X	90.7	272.0	**NOx**	167.0	167.0	**NOx**	62.0	62.0
CO	1,679.7	5,039.0	**CO**	394.0	394.0	**CO**	126.0	126.0
VOC	266.7	800.0	**VOC**	98.0	98.0	**VOC**	21.0	21.0
SO_2 (@ 12.65 ppmv)	5.1	15.3	**SO_2**	5.1	5.1	**SO_2**	2.6	2.6
PM_{10} = $PM_{2.5}$	21.3	64.0	**PM_{10} = $PM_{2.5}$**	23.0	23.0	**PM_{10} = $PM_{2.5}$**	5.0	5.0

All turbine operating parameters and emissions data provided by FLUOR based on expected operating parameters.
Startup and shutdown SO_2 emissions will always be lower than normal operation SO_2 emissions. Startup and shutdown emissions are assumed equal to the normal operations max emission rate.

Average Annual Emissions

			Pollutant	Turbine Emissions lb/yr/CT	Emissions ton/yr/CT	Emissions g/sec/CT
Total Hours of Operation	8,322.0					
Total Number of Cold Starts	10.0					
Cold Start Duration (hr)	3.0		NO_X	296,044.0	148.0	4.3
Total Number of Hot Starts	10.0		CO	277,817.2	138.9	4.0
Hot Start Duration (hr)	1.0		VOC	59,906.8	30.0	0.9
Total Number of Shutdowns	20.0		SO_2	40,045.4	20.0	0.6
Shutdown Duration (hr)	0.5		PM_{10} = $PM_{2.5}$	149,866.0	74.9	2.2
Duct Burner Operation (hr)	8,272.0		NH_3	134,158.6	67.1	1.9
Average Normal Operation (hr)	0.0					

Assumptions:
Average annual normal operational emissions are calculated using yearly average- 65°F, at 100 % load.
Duct burner emissions are calculated using yearly average- 65°F, at 100 % load with duct burners.

Parameters

Days per year:	365
Hours per day:	24
Minutes per hour:	60
Seconds per minute:	60

Hydrogen Energy, Inc
HECA Amendment

10/7/2009

First Quarter Emissions (Jan, Feb, Mar)

			Pollutant	Turbine Emissions lb/yr/CT	Emissions ton/yr/CT
Total Hours of Operation	2,080.5				
Total Number of Cold Starts	2.5				
Cold Start Duration (hr)	3.0		NO_X	74,011.0	37.0
Total Number of Hot Starts	2.5		CO	69,454.3	34.7
Hot Start Duration (hr)	1.0		VOC	14,976.7	7.5
Total Number of Shutdowns	5.0		SO_2	10,011.4	5.0
Shutdown Duration (hr)	0.5		$PM_{10} = PM_{2.5}$	37,466.5	18.7
Duct Burner Operation (hr)	2,068.0		NH_3	33,539.7	16.8
Average Normal Operation (hr)	0.0				

Assumptions:
Quarterly normal operational emissions are calculated using yearly average- 65°F, at 100 % load.
Duct burner emissions are calculated using yearly average- 65°F, at 100 % load with duct burners.

Second Quarter Emissions (Apr, May, Jun)

			Pollutant	Turbine Emissions lb/yr/CT	Emissions ton/yr/CT
Total Hours of Operation	2,080.5				
Total Number of Cold Starts	2.5				
Cold Start Duration (hr)	3.0		NO_X	74,011.0	37.0
Total Number of Hot Starts	2.5		CO	69,454.3	34.7
Hot Start Duration (hr)	1.0		VOC	14,976.7	7.5
Total Number of Shutdowns	5.0		SO_2	10,011.4	5.0
Shutdown Duration (hr)	0.5		$PM_{10} = PM_{2.5}$	37,466.5	18.7
Duct Burner Operation (hr)	2,068.0		NH_3	33,539.7	16.8
Average Normal Operation (hr)	0.0				

Assumptions:
Quarterly normal operational emissions are calculated using yearly average- 65°F, at 100 % load.
Duct burner emissions are calculated using yearly average- 65°F, at 100 % load with duct burners.

Third Quarter Emissions (Jul, Aug, Sep)

			Pollutant	Turbine Emissions lb/yr/CT	Emissions ton/yr/CT
Total Hours of Operation	2,080.5				
Total Number of Cold Starts	2.5				
Cold Start Duration (hr)	3.0		NO_X	74,011.0	37.0
Total Number of Hot Starts	2.5		CO	69,454.3	34.7
Hot Start Duration (hr)	1.0		VOC	14,976.7	7.5
Total Number of Shutdowns	5.0		SO_2	10,011.4	5.0
Shutdown Duration (hr)	0.5		$PM_{10} = PM_{2.5}$	37,466.5	18.7
Duct Burner Operation (hr)	2,068.0		NH_3	33,539.7	16.8
Average Normal Operation (hr)	0.0				

Assumptions:
Quarterly normal operational emissions are calculated using yearly average- 65°F, at 100 % load.
Duct burner emissions are calculated using yearly average- 65°F, at 100 % load with duct burners.

Fourth Quarter Emissions (Oct, Nov, Dec)

			Pollutant	Turbine Emissions lb/yr/CT	Emissions ton/yr/CT
Total Hours of Operation	2,080.5				
Total Number of Cold Starts	2.5				
Cold Start Duration (hr)	3.0		NO_X	74,011.0	37.0
Total Number of Hot Starts	2.5		CO	69,454.3	34.7
Hot Start Duration (hr)	1.0		VOC	14,976.7	7.5
Total Number of Shutdowns	5.0		SO_2	10,011.4	5.0
Shutdown Duration (hr)	0.5		$PM_{10} = PM_{2.5}$	37,466.5	18.7
Duct Burner Operation (hr)	2,068.0		NH_3	33,539.7	16.8
Average Normal Operation (hr)	0.0				

Assumptions:
Quarterly normal operational emissions are calculated using yearly average- 65°F, at 100 % load.
Duct burner emissions are calculated using yearly average- 65°F, at 100 % load with duct burners.

Modeling Worst-Case 1 hr Emissions per Turbine

Pollutant	lb/hr/CT	g/sec/CT
NOx	167.0	21.0
CO	1,679.7	211.6
SO_2	5.1	0.6

Assumptions:
Startup emissions represent worst case hr for NOx and CO.
NOx emissions are from hot start
CO emissions are from cold start
Calculation assumes that startup and shutdown SO_2 emissions will always be lower than normal operational SO_2 emissions.

Modeling Worst-Case 3 hr Emissions per Turbine

	hr	emission rate lb/hr	Emissions lb/CT	
Total Hours of Operation	3.0			
Startup Duration	0.0		0.0	contribution over 3 hr from start up
Shutdown Duration	0.0		0.0	contribution over 3 hr from shut down
Hours of Normal Operation (burning natural gas)	3.0	5.1	15.3	contribution over 3 hr from normal operation
SO_2 worst-case 3 hr emissions per turbine	15.3	lb/3 hr		
SO_2 worst-case 1 hr emissions per turbine	5.1	lb/hr		
SO_2 modeling worst-case emissions per turbine	0.6	g/sec		

Assumptions:
Only SO_2 is considered for an average 3-hour Ambient Air Quality Standard.
Normal operation assumes max emission rate
Worst-case 3 hr emissions assumes a total start up of : 0
Worst-case 3 hr emissions assumes a total shut down of : 0
Calculation assumes that startup and shutdown SO_2 emissions will always be lower than normal operational SO_2 emissions

Hydrogen Energy, Inc
HECA Amendment
10/7/2009

Modeling Worst-Case 8 hr Emissions per Turbine

	hr	emission rate lb/hr	Emissions lb/CT	
Total Hours of Operation	8.0			
Startup Duration (cold start)	6.0		10,078.0	contribution over 8 hr from start up
Shutdown Duration	1.5		378.0	contribution over 8 hr from shut down
Hours of Normal Operation (burning natural gas)	0.5	27.6	13.8	contribution over 8 hr from normal operation
CO worst-case 8 hr emissions per turbine	10,469.8	lb/8 hr		
CO worst-case 1 hr emissions per turbine	1,308.7	lb/hr		
CO modeling worst-case emissions per turbine	164.9	g/sec		

Assumptions:
Only CO is considered for an average 8-hour Ambient Air Quality Standard.
Normal operation assumes max emission rate
Worst-case 8 hr emissions assumes a total COLD start up of : 2
Worst-case 8 hr emissions assumes a total shut down of : 3

Worst-Case Daily Emissions per Turbine and Modeling Worst-Case 24 Hour Emission Rate

SO_2 (lb/day/CT)	122.4
SO_2 (g/s/CT) (burning natural gas)	0.6
PM_{10} = $PM_{2.5}$ (lb/day/CT)	
PM_{10} = $PM_{2.5}$ (g/s/CT) (burning natural gas)	

Assumptions:
Only SO_2 and PM are considered for an average 24-hour Ambient Air Quality Standard.
For SO_2 24 hrs of normal operation at max emission rate
For PM emissions are calculated below assuming startup and shutdown contributions.

Worst-Case Daily Emissions per Turbine and Modeling Worst-Case 24 Hour Emission Rate

Pollutant	Time in Startup hr	Startup Emission Rate lb/start	Time in Shut Down hr	Shutdown Emission Rate lb/shutdown	Time in Normal Operation hr	Normal Operation Emission Rate lb/start	Worst-Case Daily Emissions lb/day/CT	Modeling Worst-Case 24 Hr Emission g/s/CT
Nox (1 COLD start up and I shut down)	3.0	272.0	0.5	62.0	17.5	36.3	1,426.4	7.5
Nox (2 HOT start ups and 2 shut downs)	2.0	167.0	1.0	62.0				
CO	12.0	5,039.0	2.0	126.0	10.0	27.6	20,935.8	
VOC	12.0	800.0	2.0	21.0	10.0	6.3	3,347.0	
SO_2								
PM_{10} = $PM_{2.5}$	12.0	64.0	2.0	5.0	10.0	18.0	456.0	2.4

Assumptions:
For CO, VOC, and PM -- emissions are calculated assuming:
Worst-case daily emissions assumes a total COLD start up of : 4
Worst-case daily emissions assumes a total shut down of : 4
Remainder of time is spent in normal operation at winter minimum - 20°F; 100% load

For CALPUFF modeling purposes, NOx emissions are calculated assuming:
Worst-case daily emissions assumes a total COLD start up of : 1 and a total HOT start up of: 2
Worst-case daily emissions assumes a total shut down of : 3
Remainder of time is spent in normal operation at winter minimum - 20°F; 100% load

See above calculation for worst-case daily SO_2:calculated as 24 hrs of normal operation at max emissions rate

CTG/HRSG Stack - SynGas

Emissions Summary

Hydrogen Energy, Inc
HECA Amendment

10/7/2009

CTG Operating Parameters

Ambient Temperature	UNITS	Winter Minimum - 20°F				Yearly Average- 65°F				Summer Maximum - 97°F			
CTG Load Level	Percent Load (%)	100%	100%	80%	60%	100%	100%	80%	60%	100%	100%	80%	60%
Evap Cooling Status	off / on	N/A	N/A	N/A	N/A	N/A	N/A	N/A	N/A	N/A	N/A	N/A	N/A
Duct Burner Status	off / on	On	Off	Off	Off	On	Off	Off	Off	On	Off	Off	Off

Average Emission Rates from CTG (lbs/hr/turbine) - Normal Operation

	UNITS	Winter Minimum - 20°F				Yearly Average- 65°F				Summer Maximum - 97°F			
NO_x (@ 4.0 ppm)	lbm/hr		37.2	31.5	26.1	39.7	36.9	31.0	25.6	39.7	38.0	30.9	25.6
CO (@ 3.0 ppm)	lbm/hr		17.0	14.4	11.9	18.1	16.8	14.1	11.7	18.1	17.4	14.1	11.7
VOC (@ 1.0 ppm)	lbm/hr		3.2	2.7	2.3	3.5	3.2	2.7	2.2	3.5	3.3	2.7	2.2
SO_2 (@ 5.0 ppmv)	lbm/hr		6.1	5.2	4.4	6.8	6.1	5.1	4.3	6.8	6.0	5.1	4.3
PM_{10} = $PM_{2.5}$	lbm/hr		19.8	19.8	19.8	19.8	19.8	19.8	19.8	19.8	19.8	19.8	19.8
NH_3 (@ 5.0 ppm slip)	lbm/hr		17.2	14.6	12.0	18.4	17.0	14.3	11.8	18.4	17.6	14.3	11.8

All turbine operating parameters and emissions data provided by FLUOR based on expected operating parameters.

Startup / Shutdown Emissions from Turbine (1CT)

Cold Startup			Hot Startup			Shutdown		
180 (min. in cold startup)	Max 1-hr. (lb/hr)	Total (lb/180min)	60 (min. in hot startup)	Max 1-hr. (lb/hr)	Total (lb/60min)	30 (min. in shutdown)	Max 1-hr. (lb/hr)	Total (lb/30min)
NO_X	90.7	272.0	**NOx**	167.0	167.0	**NOx**	62.0	62.0
CO	1,679.7	5,039.0	**CO**	394.0	394.0	**CO**	126.0	126.0
VOC	266.7	800.0	**VOC**	98.0	98.0	**VOC**	21.0	21.0
SO_2 (@ 12.65 ppmv)	5.1	15.3	**SO2**	5.1	5.1	**SO2**	2.6	2.6
PM_{10} = $PM_{2.5}$	21.3	64.0	**PM_{10} = $PM_{2.5}$**	23.0	23.0	**PM_{10} = $PM_{2.5}$**	5.0	5.0

All turbine operating parameters and emissions data provided by FLUOR based on expected operating parameters.
CTGs will always be started burning natural gas. Startup and shutdown emission rates above reflect natural gas.
Startup and shutdown SO_2 emissions will always be lower than normal operation SO_2 emissions. Startup and shutdown emissions are assumed equal to normal operations (burning natural gas) at the max emission rate.

Average Annual Emissions

			Pollutant	Turbine Emissions lb/yr/CT	Emissions ton/yr/CT	Emissions g/sec/CT
Total Hours of Operation	8,322.0					
Total Number of Cold Starts	10.0					
Cold Start Duration (hr)	3.0		NO_X	334,353.0	167.2	4.8
Total Number of Hot Starts	10.0		CO	206,919.2	103.5	3.0
Hot Start Duration (hr)	1.0		VOC	37,984.6	19.0	0.5
Total Number of Shutdowns	20.0		SO_2	56,713.0	28.4	0.8
Shutdown Duration (hr)	0.5		PM_{10} = $PM_{2.5}$	164,755.6	82.4	2.4
Duct Burner Operation (hr)	8,272.0		NH_3	151,855.7	75.9	2.2
Average Normal Operation (hr)	0.0					

Assumptions:
Average annual normal operational emissions are calculated using yearly average- 65°F, at 100 % load.
Duct burner emissions are calculated using yearly average- 65°F, at 100 % load with duct burners.

Parameters

Days per year:	365
Hours per day:	24
Minutes per hour:	60
Seconds per minute:	60

Hydrogen Energy, Inc
HECA Amendment

10/7/2009

First Quarter Emissions (Jan, Feb, Mar)

			Pollutant	Turbine Emissions lb/yr/CT	Emissions ton/yr/CT
Total Hours of Operation	2,080.5				
Total Number of Cold Starts	2.5				
Cold Start Duration (hr)	3.0		NO_X	83,588.3	41.8
Total Number of Hot Starts	2.5		CO	51,729.8	25.9
Hot Start Duration (hr)	1.0		VOC	9,496.2	4.7
Total Number of Shutdowns	5.0		SO_2	14,178.3	7.1
Shutdown Duration (hr)	0.5		$PM_{10} = PM_{2.5}$	41,188.9	20.6
Duct Burner Operation (hr)	2,068.0		NH_3	37,963.9	19.0
Average Normal Operation (hr)	0.0				

Assumptions:
Quarterly normal operational emissions are calculated using yearly average- 65°F, at 100 % load.
Duct burner emissions are calculated using yearly average- 65°F, at 100 % load with duct burners.

Second Quarter Emissions (Apr, May, Jun)

			Pollutant	Turbine Emissions lb/yr/CT	Emissions ton/yr/CT
Total Hours of Operation	2,080.5				
Total Number of Cold Starts	2.5				
Cold Start Duration (hr)	3.0		NO_X	83,588.3	41.8
Total Number of Hot Starts	2.5		CO	51,729.8	25.9
Hot Start Duration (hr)	1.0		VOC	9,496.2	4.7
Total Number of Shutdowns	5.0		SO_2	14,178.3	7.1
Shutdown Duration (hr)	0.5		$PM_{10} = PM_{2.5}$	41,188.9	20.6
Duct Burner Operation (hr)	2,068.0		NH_3	37,963.9	19.0
Average Normal Operation (hr)	0.0				

Assumptions:
Quarterly normal operational emissions are calculated using yearly average- 65°F, at 100 % load.
Duct burner emissions are calculated using yearly average- 65°F, at 100 % load with duct burners.

Third Quarter Emissions (Jul, Aug, Sep)

			Pollutant	Turbine Emissions lb/yr/CT	Emissions ton/yr/CT
Total Hours of Operation	2,080.5				
Total Number of Cold Starts	2.5				
Cold Start Duration (hr)	3.0		NO_X	83,588.3	41.8
Total Number of Hot Starts	2.5		CO	51,729.8	25.9
Hot Start Duration (hr)	1.0		VOC	9,496.2	4.7
Total Number of Shutdowns	5.0		SO_2	14,178.3	7.1
Shutdown Duration (hr)	0.5		$PM_{10} = PM_{2.5}$	41,188.9	20.6
Duct Burner Operation (hr)	2,068.0		NH_3	37,963.9	19.0
Average Normal Operation (hr)	0.0				

Assumptions:
Quarterly normal operational emissions are calculated using yearly average- 65°F, at 100 % load.
Duct burner emissions are calculated using yearly average- 65°F, at 100 % load with duct burners.

Fourth Quarter Emissions (Oct, Nov, Dec)

			Pollutant	Turbine Emissions lb/yr/CT	Emissions ton/yr/CT
Total Hours of Operation	2,080.5				
Total Number of Cold Starts	2.5				
Cold Start Duration (hr)	3.0		NO_X	83,588.3	41.8
Total Number of Hot Starts	2.5		CO	51,729.8	25.9
Hot Start Duration (hr)	1.0		VOC	9,496.2	4.7
Total Number of Shutdowns	5.0		SO_2	14,178.3	7.1
Shutdown Duration (hr)	0.5		$PM_{10} = PM_{2.5}$	41,188.9	20.6
Duct Burner Operation (hr)	2,068.0		NH_3	37,963.9	19.0
Average Normal Operation (hr)	0.0				

Assumptions:
Quarterly normal operational emissions are calculated using yearly average- 65°F, at 100 % load.
Duct burner emissions are calculated using yearly average- 65°F, at 100 % load with duct burners.

Modeling Worst-Case 1 hr Emissions per Turbine

Pollutant	lb/hr/CT	g/sec/CT
NOx	167.0	21.0
CO	1,679.7	211.6
SO_2	6.8	0.9

Assumptions:
Startup emissions represent worst case hr for NOx and CO. Startup and shutdown only burn natural gas.
NOx emissions are from hot start
CO emissions are from cold start
Normal operation burning syngas represents worst case SO_2.
Calculation assumes that startup and shutdown SO_2 emissions will always be lower than normal operational (burning natural gas) SO_2 emissions.

Modeling Worst-Case 3 hr Emissions per Turbine

	hr	Emission Rate lb/hr	Emissions lb/CT	
Total Hours of Operation	3.0			
Startup Duration	0.0		0.0	contribution over 3 hr from start up
Shutdown Duration	0.0		0.0	contribution over 3 hr from shut down
Hours of Normal Operation (burning syngas)	3.0	6.8	20.5	contribution over 3 hr from normal operation
SO_2 worst-case 3 hr emissions per turbine	20.5	lb/3 hr		
SO_2 worst-case 1 hr emissions per turbine	6.8	lb/hr		
SO_2 modeling worst-case emissions per turbine	0.9	g/sec		

Assumptions:
Only SO_2 is considered for an average 3-hour Ambient Air Quality Standard.
Normal operation burning syngas represents worst case SO_2.
Worst-case 3 hr emissions assumes a total start up of : 0
Worst-case 3 hr emissions assumes a total shut down of : 0
Calculation assumes that startup and shutdown SO_2 emissions will always be lower than normal operational (burning natural gas) SO_2 emissions.

Hydrogen Energy, Inc *10/7/2009*
HECA Amendment

Modeling Worst-Case 8 hr Emissions per Turbine

	hr	Emission Rate lb/hr	Emissions lb/CT	
Total Hours of Operation	8.0			
Startup Duration	6.0		10,078.0	contribution over 8 hr from start up
Shutdown Duration	1.5		378.0	contribution over 8 hr from shut down
Hours of Normal Operation (burning syngas)	0.5	18.1	9.1	contribution over 8 hr from normal operation
CO worst-case 8 hr emissions per turbine	10,465.1	lb/8 hr		
CO worst-case 1 hr emissions per turbine	1,308.1	lb/hr		
CO modeling worst-case emissions per turbine	164.8	g/sec		

Assumptions:
Only CO is considered for an average 8-hour Ambient Air Quality Standard.
Normal operation assumes max rate.
Worst-case 8 hr emissions assumes a total COLD start up of : 2
Worst-case 8 hr emissions assumes a total shut down of : 3

Worst-Case Daily Emissions per Turbine and Modeling Worst-Case 24 Hour Emission Rate

SO_2 (lb/day/CT)	163.8
SO_2 (g/s/CT) (burning syngas)	0.9
PM_{10} = $PM_{2.5}$ (lb/day/CT)	475.2
PM_{10} = $PM_{2.5}$ (g/s/CT) (burning syngas)	2.5

Assumptions:
Only SO_2 and PM are considered for an average 24-hour Ambient Air Quality Standard.
For SO_2 24 hrs of normal operation max emission rate
For PM 24 hrs of normal operation max emission rate

Worst-Case Daily Emissions per Turbine and Modeling Worst-Case 24 Hour Emission Rate

Pollutant	Time in Startup hr	Startup Emission Rate lb/start	Time in Shut Down hr	Shutdown Emission Rate lb/shutdown	Time in Normal Operation hr	Normal Operation Emission Rate lb/start	Worst-Case Daily Emissions lb/day/CT	Modeling Worst-Case 24 Hr Emission g/s/CT
NOx	12.0	272.0	2.0	62.0	10.0	39.7	1,733.4	
CO	12.0	5,039.0	2.0	126.0	10.0	18.1	20,841.4	
VOC	12.0	800.0	2.0	21.0	10.0	3.5	3,318.6	
SO_2								
PM_{10} = $PM_{2.5}$								

Assumptions:
For NOx, CO, and VOC -- emissions are calculated assuming:
Worst-case daily emissions assumes a total start up of : 4
Worst-case daily emissions assumes a total shut down of : 4
Remainder of time is spent in normal operation at max emission rate
See above calculation for worst-case daily SO_2 and PM: calculated as 24 hrs of normal operationat max emissions rate

CTG/HRSG Stack - Co Firing

Emissions Summary

Hydrogen Energy, Inc
HECA Amendment

10/7/2009

CTG Operating Parameters

Ambient Temperature	**UNITS**	**Winter Minimum - 20°F**				**Yearly Average- 65°F**				**Summer Maximum - 97°F**			
CTG Load Level	Percent Load (%)	100%	100%	80%	60%	100%	100%	80%	60%	100%	100%	80%	60%
Evap Cooling Status	off / on	N/A	N/A	N/A	N/A	N/A	N/A	N/A	N/A	N/A	N/A	N/A	N/A
Duct Burner Status	off / on	On	Off	Off	Off	On	Off	Off	Off	On	Off	Off	Off

Average Emission Rates from CTG (lbs/hr/turbine) - Normal Operation

	UNITS	**Winter Minimum - 20°F**				**Yearly Average- 65°F**				**Summer Maximum - 97°F**			
NO_x (@ 4.0 ppm)	lbm/hr	41.3	34.0			38.7	31.7						
CO (@ 5.0 ppm)	lbm/hr	31.4	25.9			29.4	24.1						
VOC (@ 2.0 ppm)	lbm/hr	7.2	5.9			6.7	5.5						
SO_2 (@ 6.7 ppmv, average) (12.65 ppm duct firing)	lbm/hr	7.4	5.2			7.0	4.8						
$PM_{10} = PM_{2.5}$	lbm/hr	19.8	19.8			19.8	19.8						
NH_3 (@ 5.0 ppm slip)	lbm/hr	19.1	15.7			17.9	14.6						

All turbine operating parameters and emissions data provided by FLUOR based on expected operating parameters. 5.0659
Co-firing emissions are controlled at the same amount as natural gas.

Startup / Shutdown Emissions from Turbine (1CT)

Cold Startup			**Hot Startup**			**Shutdown**		
180 (min. in cold startup)	Max 1-hr. (lb/hr)	Total (lb/180min)	60 (min. in hot startup)	Max 1-hr. (lb/hr)	Total (lb/60min)	30 (min. in shutdown)	Max 1-hr. (lb/hr)	Total (lb/30min)
NO_X	90.7	272.0	**NOx**	167.0	167.0	**NOx**	62.0	62.0
CO	1,679.7	5,039.0	**CO**	394.0	394.0	**CO**	126.0	126.0
VOC	266.7	800.0	**VOC**	98.0	98.0	**VOC**	21.0	21.0
SO_2 (@ 12.65 ppmv)	5.1	15.3	**SO2**	5.1	5.1	**SO2**	2.6	2.6
$PM_{10} = PM_{2.5}$	21.3	64.0	**$PM_{10} = PM_{2.5}$**	23.0	23.0	**$PM_{10} = PM_{2.5}$**	5.0	5.0

All turbine operating parameters and emissions data provided by FLUOR based on expected operating parameters.
CTGs will always be started burning natural gas. Startup and shutdown emission rates above reflect natural gas.
Startup and shutdown SO_2 emissions will always be lower than normal operation SO_2 emissions. Startup and shutdown emissions are assumed equal to normal operations (burning natural gas) at the max emission rate.

Average Annual Emissions

			Pollutant	**Turbine Emissions lb/yr/CT**	**Emissions ton/yr/CT**	**Emissions g/sec/CT**
Total Hours of Operation	8,322.0					
Total Number of Cold Starts	10.0					
Cold Start Duration (hr)	3.0		NO_X	325,712.3	162.9	4.7
Total Number of Hot Starts	10.0		CO	300,390.9	150.2	4.3
Hot Start Duration (hr)	1.0		VOC	65,066.5	32.5	0.9
Total Number of Shutdowns	20.0		SO_2	58,357.9	29.2	0.8
Shutdown Duration (hr)	0.5		$PM_{10} = PM_{2.5}$	164,755.6	82.4	2.4
Duct Burner Operation (hr)	8,272.0		NH_3	147,864.1	73.9	2.1
Average Normal Operation (hr)	0.0					

Assumptions:
Average annual normal operational emissions are calculated using yearly average- 65°F, at 100 % load.
Duct burner emissions are calculated using yearly average- 65°F, at 100 % load with duct burners.

Parameters

Days per year:	365
Hours per day:	24
Minutes per hour:	60
Seconds per minute:	60

CTG/HRSG Stack - Co Firing

Emissions Summary

Hydrogen Energy, Inc
HECA Amendment

10/7/2009

First Quarter Emissions (Jan, Feb, Mar)

			Pollutant	Turbine Emissions lb/yr/CT	Emissions ton/yr/CT
Total Hours of Operation	2,080.5				
Total Number of Cold Starts	2.5				
Cold Start Duration (hr)	3.0		NO_X	81,428.1	40.7
Total Number of Hot Starts	2.5		CO	75,097.7	37.5
Hot Start Duration (hr)	1.0		VOC	16,266.6	8.1
Total Number of Shutdowns	5.0		SO_2	14,589.5	7.3
Shutdown Duration (hr)	0.5		$PM_{10} = PM_{2.5}$	41,188.9	20.6
Duct Burner Operation (hr)	2,068.0		NH_3	36,966.0	18.5
Average Normal Operation (hr)	0.0				

Assumptions:
Quarterly normal operational emissions are calculated using yearly average- 65°F, at 100 % load.
Duct burner emissions are calculated using yearly average- 65°F, at 100 % load with duct burners.

Second Quarter Emissions (Apr, May, Jun)

			Pollutant	Turbine Emissions lb/yr/CT	Emissions ton/yr/CT
Total Hours of Operation	2,080.5				
Total Number of Cold Starts	2.5				
Cold Start Duration (hr)	3.0		NO_X	81,428.1	40.7
Total Number of Hot Starts	2.5		CO	75,097.7	37.5
Hot Start Duration (hr)	1.0		VOC	16,266.6	8.1
Total Number of Shutdowns	5.0		SO_2	14,589.5	7.3
Shutdown Duration (hr)	0.5		$PM_{10} = PM_{2.5}$	41,188.9	20.6
Duct Burner Operation (hr)	2,068.0		NH_3	36,966.0	18.5
Average Normal Operation (hr)	0.0				

Assumptions:
Quarterly normal operational emissions are calculated using yearly average- 65°F, at 100 % load.
Duct burner emissions are calculated using yearly average- 65°F, at 100 % load with duct burners.

Modeling Worst-Case 1 hr Emissions per Turbine

Pollutant	lb/hr/CT	g/sec/CT
NOx	167.0	21.0
CO	1,679.7	211.6
SO_2	7.4	0.93

Assumptions:
Startup emissions represent worst case hr for NOx and CO. Startup and shutdown only burn natural gas.
NOx emissions are from hot start
CO emissions are from cold start
Normal operation co firing represents worst case SQ
always be lower than normal operational (burning natural gas) S_2
emissions.

Third Quarter Emissions (Jul, Aug, Sep)

			Pollutant	Turbine Emissions lb/yr/CT	Emissions ton/yr/CT
Total Hours of Operation	2,080.5				
Total Number of Cold Starts	2.5				
Cold Start Duration (hr)	3.0		NO_X	81,428.1	40.7
Total Number of Hot Starts	2.5		CO	75,097.7	37.5
Hot Start Duration (hr)	1.0		VOC	16,266.6	8.1
Total Number of Shutdowns	5.0		SO_2	14,589.5	7.3
Shutdown Duration (hr)	0.5		$PM_{10} = PM_{2.5}$	41,188.9	20.6
Duct Burner Operation (hr)	2,068.0		NH_3	36,966.0	18.5
Average Normal Operation (hr)	0.0				

Assumptions:
Quarterly normal operational emissions are calculated using yearly average- 65°F, at 100 % load.
Duct burner emissions are calculated using yearly average- 65°F, at 100 % load with duct burners.

Fourth Quarter Emissions (Oct, Nov, Dec)

			Pollutant	Turbine Emissions lb/yr/CT	Emissions ton/yr/CT
Total Hours of Operation	2,080.5				
Total Number of Cold Starts	2.5				
Cold Start Duration (hr)	3.0		NO_X	81,428.1	40.7
Total Number of Hot Starts	2.5		CO	75,097.7	37.5
Hot Start Duration (hr)	1.0		VOC	16,266.6	8.1
Total Number of Shutdowns	5.0		SO_2	14,589.5	7.3
Shutdown Duration (hr)	0.5		$PM_{10} = PM_{2.5}$	41,188.9	20.6
Duct Burner Operation (hr)	2,068.0		NH_3	36,966.0	18.5
Average Normal Operation (hr)	0.0				

Assumptions:
Quarterly normal operational emissions are calculated using yearly average- 65°F, at 100 % load.
Duct burner emissions are calculated using yearly average- 65°F, at 100 % load with duct burners.

Hydrogen Energy, Inc *10/7/2009*
HECA Amendment

Modeling Worst-Case 3 hr Emissions per Turbine

	hr	emission rate lb/hr	Emissions lb/CT	
Total Hours of Operation	3.0			
Startup Duration	0.0		0.0	contribution over 3 hr from start up
Shutdown Duration	0.0		0.0	contribution over 3 hr from shut down
Hours of Normal Operation (co firing)	3.0	7.4	22.1	contribution over 3 hr from normal operation
SO_2 worst-case 3 hr emissions per turbine	22.1	lb/3 hr		
SO_2 worst-case 1 hr emissions per turbine	7.4	lb/hr		
SO_2 modeling worst-case emissions per turbine	0.9	g/sec		

Assumptions:
Only SO_2 is considered for an average 3-hour Ambient Air Quality Standard.
Normal operation co firing represents worst case SO
Worst-case 3 hr emissions assumes a total start up of : 0
Worst-case 3 hr emissions assumes a total shut down of : 0
always be lower than normal operational (burning natural gas) S_2 emissions.

Modeling Worst-Case 8 hr Emissions per Turbine

	hr	emission rate lb/hr	Emissions lb/CT	
Total Hours of Operation	8.0			
Startup Duration	6.0		10,078.0	contribution over 8 hr from start up
Shutdown Duration	1.5		378.0	contribution over 8 hr from shut down
Hours of Normal Operation (co firing)	0.5	31.4	15.7	contribution over 8 hr from normal operation
CO worst-case 8 hr emissions per turbine	10,471.7	lb/8 hr		
CO worst-case 1 hr emissions per turbine	1,309.0	lb/hr		
CO modeling worst-case emissions per turbine	164.9	g/sec		

Assumptions:
Only CO is considered for an average 8-hour Ambient Air Quality Standard.
Normal operation assumes max rate.
Worst-case 8 hr emissions assumes a total COLD start up of : 2
Worst-case 8 hr emissions assumes a total shut down of : 3

Worst-Case Daily Emissions per Turbine and Modeling Worst-Case 24 Hour Emission Rate

SO_2 (lb/day/CT)	177.2
SO2 (g/s/CT) (co firing)	0.9
PM_{10} = $PM_{2.5}$ (lb/day/CT)	475.2
PM_{10} = $PM_{2.5}$ (g/s/CT) (cofiring)	2.5

Assumptions:
Only SO_2 and PM are considered for an average 24-hour Ambient Air Quality Standard.
For SO_2 24 hrs of normal operation max emission rate
For PM 24 hrs of normal operation max emission rate

Worst-Case Daily Emissions per Turbine and Modeling Worst-Case 24 Hour Emission Rate

Pollutant	Time in Startup hr	Startup Emission Rate lb/start	Time in Shut Down hr	Shutdown Emission Rate lb/shutdown	Time in Normal Operation hr	Normal Operation Emission Rate lb/start	Worst-Case Daily Emissions lb/day/CT	Modeling Worst-Case 24 Hr Emission g/s/CT
NOx	12.0	272.0	2.0	62.0	10.0	41.3	1,748.8	
CO	12.0	5,039.0	2.0	126.0	10.0	31.4	20,974.1	
VOC	12.0	800.0	2.0	21.0	10.0	7.2	3,355.8	
SO_2								
PM_{10} = $PM_{2.5}$								

Assumptions:
For NOx, CO, and VOC -- emissions are calculated assuming:
Worst-case daily emissions assumes a total start up of : 4
Worst-case daily emissions assumes a total shut down of : 4
Remainder of time is spent in normal operation at max emission rate
See above calculation for worst-case daily SOand PM: calculated as 24 hrs of normal operationat max emissions rate

Hydrogen Energy, Inc *10/7/2009*
HECA Amendment

Auxiliary Boiler - Annual Operating Emissions

Total Hours of Operation	2,190	hr/yr
Firing Rate	142	MMBtu/hr

Hours per Qtr			
Q1	**Q2**	**Q3**	**Q4**
547.5	547.5	547.5	547.5

Assuming equal operation in each quarter

Auxiliary Boiler Emission Factors

NOx (low NOx burner and flue gas recirculation, 9 ppmvd (3% O2))	0.011	lb/MMBtu
CO (50 ppmvd (3% O2))	0.037	lb/MMBtu
VOC	0.004	lb/MMBtu
SO_2 (12.65 ppmv total sulfur in pipeline natural gas)	0.00204	lb/MMBtu
$PM_{10} = PM_{2.5}$	0.005	lb/MMBtu

Auxiliary Boiler Pollutant Emission Rates

	Auxiliary Boiler Emissions				
Pollutant	**lb/hr**	**lb/day**	**lb/yr**	**ton/qtr**	**ton/yr**
NOx	1.56	37.49	3,420.78	0.43	1.7
CO	5.25	126.10	11,506.26	1.44	5.8
VOC	0.57	13.63	1,243.92	0.16	0.6
SO_2	0.29	6.96	635.09	0.08	0.3
$PM_{10} = PM_{2.5}$	0.71	17.04	1,554.90	0.19	0.8

Hydrogen Energy, Inc
HECA Amendment

10/7/2009

Modeling Worst-Case 1 hr Emissions

NOx (g/sec)	0.2
CO (g/sec)	0.7
SO_2 (g/sec)	0.04

Only NOx, CO, and SO_2 are considered for an average 1-hour Ambient Air Quality Standard.

Modeling Worst-Case 3 hr Emissions

SO_2 (lb/3-hr)	0.87
SO_2 (g/sec)	0.04

Only SO_2 is considered for an average 3-hour Ambient Air Quality Standard.

Modeling Worst-Case 8 hr Emissions

CO (lb/8-hr)	42.03
CO (g/sec)	0.7

Only CO is considered for an average 8-hour Ambient Air Quality Standard.

Modeling Worst-Case 24 Hour Emissions

SO_2 (lb/24-hr)	6.96
SO_2 (g/sec)	0.04
PM_{10} = $PM_{2.5}$ (lb/24-hr)	17.04
PM_{10} = $PM_{2.5}$ (g/sec)	0.09

Only SO_2 and PM are considered for an average 24-hour Ambient Air Quality Standard.

Modeling Annual Average Emissions

NOx (g/sec)	0.05
CO (g/sec)	0.2
VOC (g/sec)	0.02
SO_2 (g/sec)	0.01
PM_{10} = $PM_{2.5}$ (g/sec)	0.02

Parameters

Days per year:	365
Hours per day:	24
Minutes per hour:	60
Seconds per minute:	60

Hydrogen Energy, Inc *10/7/2009*
HECA Amendment

Gasification Flare - Normal Operating Emissions From Pilot

Total Hours of Operation	8,760	hr/yr
Gasification Flare Pilot Fuel Use =	0.5	MMBtu/hr

Hours per Qtr			
Q1	**Q2**	**Q3**	**Q4**
2190	2190	2190	2190

Assuming equal operation in each quarter

Pilot Pollutant Emission Factors

NOx (lb/MMBtu, HHV)	0.12
CO (lb/MMBtu, HHV)	0.08
VOC (lb/MMBtu, HHV)	0.0013
SO_2 (lb/MMBtu, HHV) (12.65 ppm)	0.002
VOC (lb/MMBtu, HHV)	0.0013
PM_{10} = $PM_{2.5}$ (lb/MMBtu, HHV)	0.003

Pilot Pollutant Emission Rates

	Pilot Emissions				
Pollutant	**lb/hr**	**lb/day**	**lb/yr**	**ton/qtr**	**ton/yr**
NOx	0.060	1.44	525.60	0.07	0.26
CO	0.040	0.96	350.40	0.04	0.18
VOC	0.001	0.02	5.69	0.0007	0.003
SO_2	0.001	0.02	8.94	0.0011	0.004
PM_{10} = $PM_{2.5}$	0.002	0.04	13.14	0.00	0.007

Hydrogen Energy, Inc *10/7/2009*
HECA Amendment

Gasification Flare - Operating Emissions During Gasifier Startup and Shutdown

Total Flare SU/SD Operation	115,500	MMBtu/yr
Wet Unshifted Gas Heat Rate	900	MMBtu/hr
Dry Shifted Gas Heat Rate	768	MMBtu/hr
Approximate Operating Hours (wet)	96	hr/yr
Approximate Operating Hours (dry)	38	hr/yr

Startup and shutdown flared gas scenario

Cold plant startup =	30,000	MMBtu/yr (1 event)	(assume 20% unshifted)
Plant shutdown =	500	MMBtu/yr (1 event)	(assume 100% unshifted)
Gasifier outages =	60,000	MMBtu/yr (24 events)	(assume 100% unshifted)
Gasifier hot restarts =	25,000	MMBtu/yr (12 events)	(assume 100% unshifted)
Total	**115,500**	**MMBtu/yr**	(approx 75% unshifted)

SU/SD Flare Pollutant Emission Factors

NOx (lb/MMBtu, HHV)	0.07
CO (lb/MMBtu, HHV) (wet)	1.00
CO (lb/MMBtu, HHV) (dry)	0.37
VOC (lb/MMBtu, HHV)	0
SO_2 (lb/MMBtu, HHV)	0
PM_{10} = $PM_{2.5}$ (lb/MMBtu, HHV)	0

SU/SD Flare Pollutant Emission Rates

	SU/SD Flare Emissions						
Pollutant	**lb/hr (wet)**	**lb/hr (dry)**	**% Wet**	**% Dry**	**lb/hr (wet/dry)**	**ton/qtr (wet/dry)**	**ton/yr (wet/dry)**
NOx	63.0	53.8	75.0%	25.0%	60.70	1.01	4.04
CO	900.0	284.3	75.0%	25.0%	746.08	12.16	48.65
VOC	0	0	0	0	0	0	0
SO_2	0	0	0	0	0	0	0
PM_{10} = $PM_{2.5}$	0	0	0	0	0	0	0

Total emissions are determined based on the fractional amount of wet and dry gas burned.

Gasification Flare — Emissions Summary

Hydrogen Energy, Inc — *10/7/2009*
HECA Amendment

Total Gasification Flare Emissions

Pollutant	Emissions			
	Pilot (ton/yr)	SU/SD (ton/yr)	Total (ton/qtr)	Total (ton/yr)
NOx	0.26	4.04	1.08	4.3
CO	0.18	48.65	12.21	48.8
VOC	0.003	0.00	0.001	0.003
SO_2	0.004	0.00	0.001	0.004
$PM_{10} = PM_{2.5}$	0.01	0.00	0.002	0.01

Modeling Worst-Case 1 hr Emissions

NOx (g/sec)	7.9
CO (g/sec)	113.4
SO_2 (g/sec)	0.0001

Only NOx, CO, and SO_2 are considered for an average 1-hour Ambient Air Quality Standard.
NOx and CO rates are taken from the SU/SD flaring events
SO_2 rate is from pilot operation

Parameters

Days per year:	365
Hours per day:	24
Minutes per hour:	60
Seconds per minute:	60

Modeling Worst-Case 3 hr Emissions

SO_2 (lb/3-hr)	0.003
SO_2 (g/sec)	0.0001

Only SO_2 is considered for an average 3-hour Ambient Air Quality Standard.
SO_2 pounds per 3-hr assumes three (3) hours of pilot operation.

Modeling Worst-Case 8 hr Emissions

CO (lb/8-hr)	7,200.00
CO (g/sec)	113.4

Only CO is considered for an average 8-hour Ambient Air Quality Standard.
Pounds per 8-hr assumes eight (8) hours of SU/SD flaring events.

Hydrogen Energy, Inc *10/7/2009*
HECA Amendment

Modeling Worst-Case 24 Hour Emissions

SO_2 (lb/24-hr)	0.02
SO_2 (g/sec)	0.0001
PM_{10} = $PM_{2.5}$ (lb/24-hr)	0.04
PM_{10} = $PM_{2.5}$ (g/sec)	0.0002

Only SO_2 and PM are considered for an average 24-hour Ambient Air Quality Standard.
Pounds per 24-hr assumes 24 hours of pilot operation.

Modeling Annual Average Emissions

NOx (g/sec)	0.1
CO (g/sec)	1.4
VOC (g/sec)	0.0001
SO_2 (g/sec)	0.0001
PM_{10} = $PM_{2.5}$ (g/sec)	0.0002

Pounds per year assumes contributions from both pilot operation and SU/SD flaring

Hydrogen Energy, Inc *10/7/2009*
HECA Amendment

SRU Flare - Normal Operating Emissions from Pilot

Total Hours of Operation	8,760	hr/yr
SRU Flare Pilot Firing Rate	0.3	MMBtu/hr

Hours per Qtr			
Q1	**Q2**	**Q3**	**Q4**
2190	2190	2190	2190

Assuming equal operation in each quarter

Pilot Pollutant Emission Factors

NOx (lb/MMBtu, HHV)	0.12
CO (lb/MMBtu, HHV)	0.08
VOC (lb/MMBtu, HHV)	0.0013
SO_2 (lb/MMBtu, HHV) (12.65 ppm)	0.002
PM_{10} = $PM_{2.5}$ (lb/MMBtu, HHV)	0.003

Pilot Pollutant Emission Rates

	Pilot Emissions				
Pollutant	**lb/hr**	**lb/day**	**lb/yr**	**ton/qtr**	**ton/yr**
NOx	0.036	0.86	315.36	0.04	0.2
CO	0.024	0.58	210.24	0.03	0.1
VOC	0.0004	0.01	3.42	0.0004	0.002
SO_2	0.0006	0.01	5.37	0.0007	0.003
PM_{10} = $PM_{2.5}$	0.0009	0.02	7.88	0.00	0.004

Hydrogen Energy, Inc *10/7/2009*
HECA Amendment

SRU - Operating Emissions During Gasifier Startup and Shutdown

Natural Gas Heat Rate (assist gas)	36.0	MMBtu/hr			
Approximate Operating Hours	6.0	hr/yr	approximately	2	events

Control efficiency of scrubber = 99.62%
Acid gas lb/hr SO2 = 4,600 lb/hr scrubbed SO2= 17.3

SU/SD Flare Pollutant Emission Factors

NOx (lb/hr)	4.32
CO (lb/hr)	2.88
VOC (lb/hr)	0.05
SO_2 (lb/hr) from natural gas	0.07
SO_2 (lb/hr) from sour flaring	17.33
PM_{10} = $PM_{2.5}$(lb/hr)	0.11

Natural gas emissions are the same as those listed for the pilot multiplied by the heat rate of the assist gas

SU/SD Flare Pollutant Emission Rates

	SU/SD Flare Emissions				
Pollutant	**lb/hr**	**lb/day**	**lb/yr**	**ton/qtr**	**ton/yr**
NOx	4.32	13.0	25.9	0.00324	0.0130
CO	2.88	8.6	17.3	0.00216	0.0086
VOC	0.05	0.1	0.3	0	0.0001
SO_2	17.41	52.2	104.4	0.01	0.0522
PM_{10} = $PM_{2.5}$	0.11	0.3	0.6	0	0.0003

SRU Flare - Total Annual Emissions

	Emissions			
Pollutant	**Pilot (ton/yr)**	**SU/SD (ton/yr)**	**Total (ton/qtr)**	**Total (ton/yr)**
NOx	0.16	0.0130	0.04	0.2
CO	0.11	0.0086	0.03	0.1
VOC	0.002	0.0001	0.000	0.002
SO_2	0.003	0.05	0.014	0.1
PM_{10} = $PM_{2.5}$	0.004	0.0003	0.001	0.004

SRU Flare — Emissions Summary

Hydrogen Energy, Inc — *10/7/2009*
HECA Amendment

Modeling Worst-Case 1 hr Emissions

NOx (g/sec)	0.544
CO (g/sec)	0.363
SO_2 (g/sec)	2.19

Only NOx, CO, and SO2 are considered for an average 1-hour Ambient Air Quality Standard.
NOx, CO, and SO2 one (1) hr rates are from taken from the SU/SD flaring events

Parameters

Days per year:	365
Hours per day:	24
Minutes per hour:	60
Seconds per minute:	60

Modeling Worst-Case 3 hr Emissions

SO_2 (lb/3-hr)	52.22
SO_2 (g/sec)	2.19

Only SO_2 is considered for an average 3-hour Ambient Air Quality Standard.
Pounds per 3-hr assumes aproximately 3 hours (1 event) from SU/SD flaring.

Modeling Worst-Case 8 hr Emissions

CO (lb/8-hr)	8.76
CO (g/sec)	0.138

Only CO is considered for an average 8-hour Ambient Air Quality Standard.
Pounds per 8-hr assumes aproximately 3 hours (1 event) from SU/SD flaring and the remainder in pilot operation.

Modeling Worst-Case 24 Hour Emissions

SO_2 (lb/24-hr)	52.23
SO_2 (g/sec)	0.27
PM_{10} = $PM_{2.5}$ (lb/24-hr)	0.34
PM_{10} = $PM_{2.5}$ (g/sec)	0.0018

Only SO_2 and PM are considered for an average 24-hour Ambient Air Quality Standard.
SO_2 and PM pounds per 24-hr assume aproximately 3 hours (1 event) from SU/SD flaring and the remainder in pilot operation.

Modeling Annual Average Emissions

NOx (g/sec)	0.005
CO (g/sec)	0.003
VOC (g/sec)	0.00005
SO_2 (g/sec)	0.002
PM_{10} = $PM_{2.5}$ (g/sec)	0.0001

Pounds per year assumes contributions from both pilot operation and SU/SD flaring

Hydrogen Energy, Inc *10/7/2009*
HECA Amendment

Rectisol - Normal Operating Emissions from Pilot

Total Hours of Operation	8,760	hr/yr
Rectisol Flare Pilot Firing Rate	0.3	MMBtu/hr

Hours per Qtr			
Q1	**Q2**	**Q3**	**Q4**
2190	2190	2190	2190

Assuming equal operation in each quarter

Pilot Pollutant Emission Factors

NOx (lb/MMBtu, HHV)	0.12
CO (lb/MMBtu, HHV)	0.08
VOC (lb/MMBtu, HHV)	0.0013
SO_2 (lb/MMBtu, HHV) (12.65 ppm)	0.002
PM_{10} = $PM_{2.5}$ (lb/MMBtu, HHV)	0.003

Pilot Pollutant Emission Rates

Pollutant	**Pilot Emissions lb/hr**	**lb/day**	**lb/yr**	**ton/qtr**	**ton/yr**
NOx	0.036	0.86	315.36	0.04	0.2
CO	0.024	0.58	210.24	0.03	0.1
VOC	0.0004	0.01	3.42	0.0004	0.002
SO_2	0.0006	0.01	5.37	0.0007	0.003
PM_{10} = $PM_{2.5}$	0.0009	0.02	7.88	0.00	0.004

Hydrogen Energy, Inc *10/7/2009*
HECA Amendment

Rectisol Flare - Total Annual Emissions

Pollutant	Emissions Pilot (ton/yr)	Total (ton/qtr)	Total (ton/yr)
NOx	0.16	0.04	0.2
CO	0.11	0.03	0.1
VOC	0.002	0.000	0.002
SO_2	0.003	0.001	0.003
PM_{10} = $PM_{2.5}$	0.004	0.001	0.004

Modeling Worst-Case 1 hr Emissions

NOx (g/sec)	0.005
CO (g/sec)	0.003
SO_2 (g/sec)	0.0001

Only NOx, CO, and SO2 are considered for an average 1-hour Ambient Air Quality Standard.
NOx, CO, and SO2 one (1) hr rates are from taken from the natural gas pilot emissions

Parameters

Days per year:	365
Hours per day:	24
Minutes per hour:	60
Seconds per minute:	60

Modeling Worst-Case 3 hr Emissions

SO_2 (lb/3-hr)	0.0018
SO_2 (g/sec)	0.0001

Only SO_2 is considered for an average 3-hour Ambient Air Quality Standard.
Pounds per 3-hr assumes aproximately 3 hours the natural gas pilot emissions.

Hydrogen Energy, Inc *10/7/2009*
HECA Amendment

Modeling Worst-Case 8 hr Emissions

CO (lb/8-hr)	0.19
CO (g/sec)	0.003

Only CO is considered for an average 8-hour Ambient Air Quality Standard.
Pounds per 8-hr assumes aproximately 8 hours of pilot operation.

Modeling Worst-Case 24 Hour Emissions

SO_2 (lb/24-hr)	0.01
SO_2 (g/sec)	0.0001
PM_{10} = $PM_{2.5}$ (lb/24-hr)	0.02
PM_{10} = $PM_{2.5}$ (g/sec)	0.0001

Only SO_2 and PM are considered for an average 24-hour Ambient Air Quality Standard.
SO_2 and PM pounds per 24-hr assume aproximately 32 hoursof pilot operation.

Modeling Annual Average Emissions

NOx (g/sec)	0.005
CO (g/sec)	0.003
VOC (g/sec)	0.00005
SO_2 (g/sec)	0.0001
PM_{10} = $PM_{2.5}$ (g/sec)	0.0001

Pounds per year assumes contributions from both pilot operation and SU/SD flaring

Hydrogen Energy, Inc *10/7/2009*
HECA Amendment

Thermal Oxidizer - Process Vent Disposal Emissions

Total Hours of Operation	8,760	hr/yr
Thermal Oxidizer Firing Rate	10	MMBtu/hr

Hours per Qtr			
Q1	**Q2**	**Q3**	**Q4**
2190	2190	2190	2190

Assuming equal operation in each quarter

Process Vent Gas Pollutant Emission Factors

NOx (lb/MMBtu, HHV)	0.24
CO (lb/MMBtu, HHV)	0.20
VOC (lb/MMBtu, HHV)	0.0070
SO_2 (lb/MMBtu, HHV)	See Below
PM_{10} = $PM_{2.5}$ (lb/MMBtu, HHV)	0.008

Assume an allowance of 2 lb/hr SO_2 emission to account for sulfur in the various vent streams plus fuel.

Process Vent Gas Pollutant Emission Rates

	Process Vent Gas Emissions				
Pollutant	**lb/hr**	**lb/day**	**lb/yr**	**ton/qtr**	**ton/yr**
NOx	2.40	57.60	21,024.00	2.63	10.5
CO	2.00	48.00	17,520.00	2.19	8.8
VOC	0.07	1.68	613.20	0.0767	0.3
SO_2	2.00	48.00	17,520.00	2.1900	8.8
PM_{10} = $PM_{2.5}$	0.08	1.92	700.80	0.09	0.4

Assume an allowance of 2 lb/hr SO_2 emission to account for sulfur in the various vent streams plus fuel.

Hydrogen Energy, Inc *10/7/2009*
HECA Amendment

Thermal Oxidizer - SRU Startup Waste Gas Disposal

Total Hours of Operation	300	hr/yr
Thermal Oxidizer Firing Rate	10	MMBtu/hr

Hours per Qtr			
Q1	**Q2**	**Q3**	**Q4**
75	75	75	75

Assuming equal operation in each quarter

SRU Startup Waste Gas Disposal Emission Factors

NOx (lb/MMBtu, HHV)	0.24
CO (lb/MMBtu, HHV)	0.20
VOC (lb/MMBtu, HHV)	0.007
SO_2 (lb/MMBtu, HHV) (12.65 ppm)	0.002
PM_{10} = $PM_{2.5}$ (lb/MMBtu, HHV)	0.008

SRU Startup Waste Gas Disposal Pollutant Emission Rates

	SRU Startup Waste Gas Disposal Emissions				
Pollutant	**lb/hr**	**lb/day**	**lb/yr**	**ton/qtr**	**ton/yr**
NOx	2.40	57.60	720.00	0.09	0.36
CO	2.00	48.00	600.00	0.08	0.30
VOC	0.07	1.68	21.00	0.003	0.011
SO_2	0.02	0.49	6.17	0.001	0.003
PM_{10} = $PM_{2.5}$	0.08	1.92	24.00	0.003	0.012

Thermal Oxidizer - Total Annual Emissions

	Emissions			
Pollutant	**Vent (ton/yr)**	**SU/SD (ton/yr)**	**Total (ton/qtr)**	**Total (ton/yr)**
NOx	10.51	0.36	2.72	10.9
CO	8.76	0.30	2.27	9.1
VOC	0.31	0.011	0.08	0.3
SO_2	8.76	0.003	2.19	8.8
PM_{10} = $PM_{2.5}$	0.35	0.012	0.09	0.4

Tail Gas Thermal Oxidizer — Emissions Summary

Hydrogen Energy, Inc
HECA Amendment

10/7/2009

Modeling Worst-Case 1 hr Emissions

NOx (g/sec)	0.6
CO (g/sec)	0.50
SO_2 (g/sec)	0.25

Only NOx, CO, and SO_2 are considered for an average 1-hour Ambient Air Quality Standard.

NOx, CO, and SO_2 one (1) hr rates include contributions from both process venting and SRU startup.

Parameters

Days per year:	365
Hours per day:	24
Minutes per hour:	60
Seconds per minute:	60

Modeling Worst-Case 3 hr Emissions

SO_2 (lb/3-hr)	6.06
SO_2 (g/sec)	0.3

Only SO_2 is considered for an average 3-hour Ambient Air Quality Standard.

SO_2 pounds per 3-hr assumes three (3) hours of oxidation from both process venting and SRU startup.

Modeling Worst-Case 8 hr Emissions

CO (lb/8-hr)	32.00
CO (g/sec)	0.5

Only CO is considered for an average 8-hour Ambient Air Quality Standard.

Pounds per 8-hr assumes eight (8) hours of oxidation from both process venting and SRU startup.

Modeling Worst-Case 24 Hour Emissions

SO_2 (lb/24-hr)	48.49
SO_2 (g/sec)	0.3
PM_{10} = $PM_{2.5}$ (lb/24-hr)	3.84
PM_{10} = $PM_{2.5}$ (g/sec)	0.02

Only SO_2 and PM are considered for an average 24-hour Ambient Air Quality Standard.

Pounds per 24-hr assumes 24 hours of oxidation from both process venting and SRU startup.

Modeling Annual Average Emissions

NOx (g/sec)	0.3
CO (g/sec)	0.26
VOC (g/sec)	0.01
SO_2 (g/sec)	0.3
PM_{10} = $PM_{2.5}$ (g/sec)	0.01

Pounds per year assumes all contributions from annual waste gas oxidation and periodic SRU startup.

Hydrogen Energy, Inc *10/7/2009*
HECA Amendment

Gasifier Warming Emissions - Normal Operation

Total Hours of Operation	1,800	hr/yr
Gasifier Firing Rate	18	MMBtu/hr

Hours per Qtr			
Q1	**Q2**	**Q3**	**Q4**
450	450	450	450

Assuming equal operation in each quarter

Gasifier Pollutant Emission Factors

NOx (lb/MMBtu, HHV)	0.11
CO (lb/MMBtu, HHV)	0.09
VOC (lb/MMBtu, HHV)	0.007
SO_2 (lb/MMBtu, HHV) (12.65 ppm)	0.002
PM_{10} = $PM_{2.5}$ (lb/MMBtu, HHV)	0.008

Gasifier Pollutant Emission Rates

	Gasifier Emissions				
Pollutant	**lb/hr**	**lb/day**	**lb/yr**	**ton/qtr**	**ton/yr**
NOx	1.98	47.52	3,564.00	0.45	1.8
CO	1.62	38.88	2,916.00	0.36	1.5
VOC	0.13	3.02	226.80	0.03	0.1
SO_2	0.04	0.88	66.10	0.01	0.0
PM_{10} = $PM_{2.5}$	0.14	3.46	259.20	0.03	0.1

Please Note That There Are Three Gassifiers; However, Under Normal Operations, Only One Operates At A Time.

Gasifier Warming — Emissions Summary

Hydrogen Energy, Inc — *10/7/2009*
HECA Amendment

Modeling Worst-Case 1 hr Emissions

NOx (g/sec)	0.2
CO (g/sec)	0.2
SO_2 (g/sec)	0.0046

Only NOx, CO, and SO_2 are considered for an average 1-hour Ambient Air Quality Standard.

NOx, CO, and SO_2 one (1) hr rates assume normal operation.

Parameters

Days per year:	365
Hours per day:	24
Minutes per hour:	60
Seconds per minute:	60

Modeling Worst-Case 3 hr Emissions

SO_2 (lb/3-hr)	0.11
SO_2 (g/sec)	0.0046

Only SO_2 is considered for an average 3-hour Ambient Air Quality Standard.

SO_2 pounds per 3-hr assumes three (3) hours of normal operation.

Modeling Worst-Case 8 hr Emissions

CO (lb/8-hr)	12.96
CO (g/sec)	0.2

Only CO is considered for an average 8-hour Ambient Air Quality Standard.

Pounds per 8-hr assumes eight (8) hours of normal operation.

Modeling Worst-Case 24 Hour Emissions

SO_2 (lb/24-hr)	0.88
SO_2 (g/sec)	0.0046
PM_{10} = $PM_{2.5}$ (lb/24-hr)	3.46
PM_{10} = $PM_{2.5}$ (g/sec)	0.02

Only SO_2 and PM are considered for an average 24-hour Ambient Air Quality Standard.

Pounds per 24-hr assumes 24 hours of normal operation.

Gasifier Warming — Emissions Summary

Hydrogen Energy, Inc — *10/7/2009*
HECA Amendment

Modeling Annual Average Emissions

NOx (g/sec)	0.1
CO (g/sec)	0.0419
VOC (g/sec)	0.0033
SO_2 (g/sec)	0.0010
PM_{10} = $PM_{2.5}$ (g/sec)	0.0037

Pounds per year assumes 1,800 hours of annual normal operation.

Hydrogen Energy, Inc *10/7/2009*
HECA Amendment

Cooling Towers - Annual Operating Emissions

Total Hours of Operation	8,322	hr/yr

Hours per Qtr			
Q1	**Q2**	**Q3**	**Q4**
2080.5	2080.5	2080.5	2080.5

Assuming equal operation in each quarter

Cooling Tower Operating Parameters

	Power Block	Process Area	ASU	Basis
Cooling water (CW) circulation rate, gpm	175,000	42,300	40,200	Typical plant performance
CW circulation rate (million lb/hr)	88	21	20	
CW dissolved solids (ppmw)	9,000	9,000	9,000	(See note)
Drift, fraction of circulating CW	0.0005%	0.0005%	0.0005%	Expected BACT

Note: Assumed 9,000 ppm TDS in circulating cooling water. Circulating water could range from 1200 to 90,000 ppm TDS depending on makeup water quality and tower operation. PM10 emissions would vary proportionately.

Cooling Tower PM_{10} Emissions

	Cooling Tower PM_{10} Emissions				
	lb/hr	**lb/day**	**lb/yr**	**ton/qtr**	**ton/yr**
Power Block Cooling Tower PM_{10} Emissions	3.94	94.50	32,767.88	4.10	16.38
Process Area Cooling Tower PM_{10} Emissions	0.95	22.84	7,920.46	0.99	3.96
ASU Cooling Tower PM_{10} Emissions	0.90	21.71	7,527.25	0.94	3.76

Hydrogen Energy, Inc *10/7/2009*
HECA Amendment

Total Cooling Tower PM_{10} Emissions

	(ton/yr)
PM_{10}	24.11
$PM_{2.5}$	14.46

$PM_{2.5}$ emission factors were determined by multiplying PM_{10} numbers by a "$PM_{2.5}$ fraction of PM_{10}" value. Fractional values for $PM_{2.5}$ were taken from the SCAQMD guidance: Final - Methodology to Calculate $PM_{2.5}$ and $PM_{2.5}$ Significance Thresholds, October 2006: Appendix A - Updated CEIDARS Table with $PM_{2.5}$ Fractions.

Parameters

Days per year:	365
Hours per day:	24
Minutes per hour:	60
Seconds per minute:	60

Modeling Worst-Case 24 Hour Emissions	Power Block	Process Area	ASU
Cells per Cooling Tower	13	4	4
PM_{10} (lb/24-hr)	94.50	22.84	21.71
PM_{10} (g/sec/cell)	0.038	0.030	0.028
$PM_{2.5}$ (lb/24-hr)	56.70	13.71	13.02
$PM_{2.5}$ (g/sec/cell)	0.023	0.018	0.017

PM is considered for an average 24-hour Ambient Air Quality Standard.
Pounds per 24-hr assumes 24 hours of continual operation.

Modeling Worst-Case Annual Emissions	Power Block	Process Area	ASU
Cells per Cooling Tower	13	4	4
PM_{10} (ton/yr)	16.38	3.96	3.76
PM_{10} (g/sec/cell)	0.036	0.028	0.027
$PM_{2.5}$ (lb/24-hr)	9.830	2.376	2.258
$PM_{2.5}$ (g/sec/cell)	0.022	0.017	0.016

PM is considered for an annual average Ambient Air Quality Standard.
Assumes continual annual operation.

Hydrogen Energy, Inc *10/7/2009*
HECA Amendment

Emergency Generator - Expected Emergency Operation and Maintenance

Total Hours of Operation	50	hr/yr
Generator Specification	2,800	Bhp

Hours per Qtr			
Q1	**Q2**	**Q3**	**Q4**
12.5	12.5	12.5	12.5

Assuming equal operation in each quarter

Generator Pollutant Emission Factors (per generator)

NOx (g/Bhp/hr)	0.50
CO (g/Bhp/hr)	0.29
VOC (g/Bhp/hr)	0.11
SO_2 (g/Bhp/hr)	N/A
$PM_{10} = PM_{2.5}$ (g/Bhp/hr)	0.03

Generator Pollutant Emission Rates (per generator)

	Generator Emissions				
Pollutant	**lb/hr**	**lb/day**	**lb/yr**	**ton/qtr**	**ton/yr**
NOx	3.09	6.17	154.32	0.02	0.1
CO	1.79	3.58	89.51	0.01	0.04
VOC	0.68	1.36	33.95	0.00	0.02
SO_2	0.03	0.06	1.40	0.00	0.001
$PM_{10} = PM_{2.5}$	0.16	0.32	8.02	0.00	0.00

Fuel sulfur content =	15	ppmw
SO_2 emissions =	0.20	lb SO_2/1000 gal
Fuel flow	140.00	gal/hr

Pounds per day assumes two (2) hours of operation for maintenance and testing.

Please note that there are two generators; all emissions are shown for individual generators

Modeling Worst-Case 1 hr Emissions (per generator)

NOx (g/sec)	0.4
CO (g/sec)	0.2
SO_2 (g/sec)	0.004

Only NOx, CO, and SO_2 are considered for an average 1-hour Ambient Air Quality Standard.

Parameters

Days per year:	365
Hours per day:	24
Minutes per hour:	60
Seconds per minute:	60

Hydrogen Energy, Inc *10/7/2009*
HECA Amendment

Modeling Worst-Case 3 hr Emissions (per generator)

SO_2 (lb/3-hr)	0.06
SO_2 (g/sec)	0.002

Only SO_2 is considered for an average 3-hour Ambient Air Quality Standard.
Pounds per 3-hr assumes two (2) hours of operation.

Modeling Worst-Case 8 hr Emissions (per generator)

CO (lb/8-hr)	3.58
CO (g/sec)	0.06

Only CO is considered for an average 8-hour Ambient Air Quality Standard.
Pounds per 8-hr assumes two (2) hours of operation.

Modeling Worst-Case 24 Hour Emissions (per generator)

SO_2 (lb/24-hr)	0.06
SO_2 (g/sec)	0.0003
PM_{10} = $PM_{2.5}$ (lb/24-hr)	0.32
PM_{10} = $PM_{2.5}$ (g/sec)	0.002

Only SO_2 and PM are considered for an average 24-hour Ambient Air Quality Standard.
Pounds per 24-hr assumes two (2) hours of operation.

Modeling Annual Average Emissions (per generator)

NOx (g/sec)	0.002
CO (g/sec)	0.001
VOC (g/sec)	0.000
SO_2 (g/sec)	0.00002
PM_{10} = $PM_{2.5}$ (g/sec)	0.0001

Pounds per year assumes 50 hours of operation.

Emergency Diesel Firewater Pump — Emissions Summary

Hydrogen Energy, Inc — *10/7/2009*
HECA Amendment

Fire Water Pump - Expected Emergency Operation and Maintenance

Total Hours of Operation	100	hr/yr
Fire Water Pump Specification	556	Bhp

Hours per Qtr			
Q1	**Q2**	**Q3**	**Q4**
25	25	25	25

Assuming equal operation in each quarter

Fire Water Pump Pollutant Emission Factors

NOx (g/Bhp/hr)	1.50
CO (g/Bhp/hr)	2.60
VOC (g/Bhp/hr)	0.14
SO_2 (g/Bhp/hr)	N/A
$PM_{10} = PM_{2.5}$ (g/Bhp/hr)	0.015

Fire Water Pump Pollutant Emission Rates

	Fire Water Pump Emissions				
Pollutant	**lb/hr**	**lb/day**	**lb/yr**	**ton/qtr**	**ton/yr**
NOx	1.84	3.68	183.86	0.02	0.1
CO	3.19	6.37	318.69	0.04	0.2
VOC	0.17	0.34	17.16	0.00	0.01
SO_2	0.01	0.01	0.56	0.0001	0.0003
$PM_{10} = PM_{2.5}$	0.02	0.04	1.84	0.00	0.00

Fuel sulfur content =	15	ppmw
SO_2 emissions =	0.20	lb SO_2/1000 gal
Fuel flow	28.00	gal/hr

Pounds per day assumes two (2) hours of operation for maintenance and testing.

Emergency Diesel Firewater Pump — Emissions Summary

Hydrogen Energy, Inc — *10/7/2009*

HECA Amendment

Modeling Worst-Case 1 hr Emissions

NOx (g/sec)	0.2
CO (g/sec)	0.4
SO_2 (g/sec)	0.0007

Only NOx, CO, and SO_2 are considered for an average 1-hour Ambient Air Quality Standard

Parameters

Days per year:	365
Hours per day:	24
Minutes per hour:	60
Seconds per minute:	60

Modeling Worst-Case 3 hr Emissions

SO_2 (lb/3-hr)	0.01
SO_2 (g/sec)	0.0005

Only SO_2 is considered for an average 3-hour Ambient Air Quality Standard.

Pounds per 3-hr assumes two (2) hours of operation.

Modeling Worst-Case 8 hr Emissions

CO (lb/8-hr)	6.37
CO (g/sec)	0.1

Only CO is considered for an average 8-hour Ambient Air Quality Standard.

Pounds per 8-hr assumes two (2) hours of operation.

Emergency Diesel Firewater Pump — Emissions Summary

Hydrogen Energy, Inc — *10/7/2009*
HECA Amendment

Modeling Worst-Case 24 Hour Emissions

SO_2 (lb/24-hr)	0.01
SO_2 (g/sec)	0.0001
PM_{10} = $PM_{2.5}$ (lb/24-hr)	0.04
PM_{10} = $PM_{2.5}$ (g/sec)	0.0002

Only SO_2 and PM are considered for an average 24-hour Ambient Air Quality Standard.
Pounds per 24-hr assumes two (2) hours of operation.

Modeling Annual Average Emissions

NOx (g/sec)	0.003
CO (g/sec)	0.005
VOC (g/sec)	0.0002
SO_2 (g/sec)	0.00001
PM_{10} = $PM_{2.5}$ (g/sec)	0.00003

Pounds per year assumes 100 hours of operation.

Hydrogen Energy, Inc
HECA Amendment

10/7/2009

Intermittent CO_2 Vent - Venting Operation

Total Days of Operation	21	day/yr
Total Hours of Operation	504	hr/yr
Total Flow	656,000	lb/hr
Total Flow	15,150	lbmol/hr

Hours per Qtr			
Q1	**Q2**	**Q3**	**Q4**
5.25	5.25	5.25	5.25

Assuming equal operation in each quarter

Vent Gas Pollutant Emission Factors

CO (ppmv)	1000
VOC (ppmv)	40
H_2S (ppmv)	10

Molecular weight

H_2S	34	lb/lbmol
CO	28	lb/lbmol
VOC	16	lb/lbmol

Vent Gas Pollutant Emission Rates

	Vent Gas Emissions				
Pollutant	**lb/hr**	**lb/day**	**lb/yr**	**ton/qtr**	**ton/yr**
CO	424.20	10,180.88	213,798.43	26.72	106.9
VOC	9.70	232.71	4,886.82	0.61	2.4
H_2S	5.15	123.62	2,596.12	0.32	1.3

Intermittent CO_2 Vent

Emissions Summary

Hydrogen Energy, Inc
HECA Amendment

10/7/2009

Modeling Worst-Case 1 hr Emissions

CO (g/sec)	53.4
H_2S (g/sec)	0.6

Only H_2S and CO are considered for an average 1-hour Ambient Air Quality Standard.
H_2S and CO one (1) hr rates assume normal venting operation.

Parameters

Days per year:	365
Hours per day:	24
Minutes per hour:	60
Seconds per minute:	60

Modeling Worst-Case 8 hr Emissions

CO (lb/8-hr)	3,393.63
CO (g/sec)	53.4

Only CO is considered for an average 8-hour Ambient Air Quality Standard.
Pounds per 8-hr assumes eight (8) continuous hours of venting.

Modeling Annual Average Emissions

CO	3.1
VOC	0.1
H2S	0.0

Pounds per year assumes normal venting averaged over the entire year.

Feedstock - Dust Collection

Emissions Summary

Hydrogen Energy, Inc
HECA Amendment

10/7/2009

Operation

Total Hours of Operation	8,760	hr/yr

Hours per Qtr			
Q1	**Q2**	**Q3**	**Q4**
2190	2190	2190	2190

Assuming equal operation in each quarter

Description	Dust Collector No.	Max Feed Handling Rate (ton/hr)	Air Flow to Collector (acfm)	Max Collector PM Emission Rate (lb/hr)	Emission Factor (lb/ton)	Max 24-hr Average		Annual Average	
						Feed Rate (ton/hr)	PM Emission (lb/hr)	Feed Rate (ton/hr)	PM Emission (lb/hr)
Truck Unloading	DC-1	900	6,467	0.277	0.00031	775	0.239	150	0.046
Coke/coal Silos (filling)	DC-2	900	16,376	0.702	0.00078	775	0.604	150	0.117
Mass Flow Bins (in/out)	DC-3	170	7,620	0.327	0.00192	170	0.327	150	0.288
Coke/coal Silos (loadout)	DC-4	170	4,872	0.209	0.00123	170	0.209	150	0.184
Crusher Inlet/Outlet	DC-5	170	4,673	0.200	0.00118	170	0.200	150	0.177
Fluxant Bins (filling)	DC-6	100	1,234	0.053	0.00053	40	0.021	6	0.003

Maximum dust collector PM emission rate based on expected supplier guarantee of 0.005 grain/scf outlet dust loading.

The maximum 24-hr feed rate to the gasifiers is limited by the grinding mill capacity.

Duct Collector Emission Rates

Pollutant	Collector Emissions				
	lb/hr	lb/day	lb/yr	ton/qtr	ton/yr
Dust Collecter 1 (DC-1)	0.24	5.73	404.65	0.05	0.2
Dust Collecter 2 (DC-2)	0.60	14.50	1,024.67	0.13	0.5
Dust Collecter 3 (DC-3)	0.33	7.84	2,524.21	0.32	1.3
Dust Collecter 4 (DC-4)	0.21	5.01	1,613.90	0.20	0.8
Dust Collecter 5 (DC-5)	0.20	4.81	1,547.98	0.19	0.8
Dust Collecter 6 (DC-6)	0.02	0.51	27.80	0.00	0.0

Pounds per hour and pounds per day calculated based on the maximum 24-hr average emission rate.

Pounds per year calculated based on the annual average emission rate.

	lb/yr	ton/qtr	ton/yr
PM_{10}	**7,143.2**	**0.9**	**3.6**
$PM_{2.5}$	**2085.8**	**0.3**	**1.0**

$PM_{2.5}$ emission factors were determined by multiplying PM_{10} numbers by a "$PM_{2.5}$ fraction of PM_{10}" value. Fractional values for $PM_{2.5}$ were taken from the SCAQMD guidance: Final - Methodology to Calculate $PM_{2.5}$ and $PM_{2.5}$ Significance Thresholds, October 2006: Appendix A - Updated CEIDARS Table with $PM_{2.5}$ Fractions.

Feedstock - Dust Collection

Emissions Summary

Hydrogen Energy, Inc
HECA Amendment

10/7/2009

Parameters

Days per year:	365
Hours per day:	24
Minutes per hour:	60
Seconds per minute:	60

Modeling Worst-Case 24 Hour Emissions	DC-1	DC-2	DC-3	DC-4	DC-5	DC-6
PM_{10} (lb/day)	5.73	14.50	7.84	5.01	4.81	0.51
PM_{10} (g/sec)	0.030	0.076	0.041	0.026	0.025	0.003
$PM_{2.5}$ (lb/24-hr)	1.673	4.235	2.289	1.463	1.404	0.148
$PM_{2.5}$ (g/sec)	0.009	0.022	0.012	0.008	0.007	0.001

PM is considered for an average 24-hour Ambient Air Quality Standard.

Pounds per hour calculated based on the maximum 24-hr average emission rate.

Modeling Annual Average Emissions	DC-1	DC-2	DC-3	DC-4	DC-5	DC-6
PM_{10} (lb/yr)	404.65	1,024.67	2,524.21	1,613.90	1,547.98	27.80
PM_{10} (g/sec)	0.006	0.015	0.036	0.023	0.022	0.000
$PM_{2.5}$ (lb/24-hr)	118.158	299.204	737.068	471.259	452.010	8.117
$PM_{2.5}$ (g/sec)	0.002	0.004	0.011	0.007	0.007	0.000

Pounds per year calculated based on the annual average emission rate.

Hydrogen Energy, Inc *10/7/2009*
HECA Amendment

GHG emissions are numerically depicted as metric tons (tonne) of carbon dioxide equivalents (CO_2e). CO_2e represents CO_2 plus the additional warming potential from CH_4 and N_2O. CH_4 and N_2O have 21 and 310 times the warming potential of CO_2, respectively.

Natural Gas GHG Emission Factors						Diesel GHG Emission Factors				
CO_2 =	52.78	kg/MMBtu =	116.36	lb/MMBtu		CO_2 =	10.15	kg/gal =	22.38	lb/gal
CH_4 =	0.0059	kg/MMBtu =	0.013	lb/MMBtu		CH_4 =	0.0003	kg/gal =	0.001	lb/gal
N_2O =	0.0001	kg/MMBtu =	0.00022	lb/MMBtu		N_2O =	0.0001	kg/gal =	0.0002	lb/gal

CO_2, CH_4, and N_2O emission factors are taken from Appendix C of the California Climate Action Registry (CCAR) General Reporting Protocol Version 2.2 (March 2007)

HRSG Stack - Burning Natural Gas

Operating Hours		876	hr/yr			
HRSG Heat Input		1,998	MMBtu/hr			
CO_2 =	92,403	tonne/yr				
CH_4 =	10	tonne/yr =	217	tonne CO_2e/yr		
N_2O =	0.18	tonne/yr =	54	tonne CO_2e/yr	Total tonne CO_2e/yr =	92,674

Startup and shutdown of the HRSG will be accomplished using natural gas. The total operating hours, including startup and shutdown, are estimated at 876 hr/yr for the worst-case greenhouse gas emissions from natural gas combustion. The total startup and shutdown duration are estimated at 50 hr/yr for the worst-case criteria pollutant emissions.

HRSG heat input rate is assumed to be the maximum heat input rate firing natural gas, which corresponds to winter minimum (20 F).

HRSG Stack - Burning Hydrogen-Rich Fuel

				Syngas GHG Emission Factors		
Operating Hours		7,446	hr/yr			
HRSG Heat Input		2,432	MMBtu/hr	CO_2 =	28.1	lb/MMBtu
CO_2 =	230,735	tonne/yr		Total tonne CO_2e/yr =	230,735	

Startup and shutdown of the HRSG will be accomplished using natural gas. The total operating hours, including startup and shutdown, are estimated at 876 hr/yr for the worst-case greenhouse gas emissions from natural gas combustion. The total startup and shutdown duration are estimated at 50 hr/yr for the worst-case criteria pollutant emissions.

HRSG heat input rate is assumed to be the maximum heat input rate firing Hydrogen-rich Fuel, which corresponds to winter minimum (20 F).

Hydrogen Energy, Inc *10/7/2009*
HECA Amendment

GHG emissions are numerically depicted as metric tons (tonne) of carbon dioxide equivalents (CO_2e). CO_2e represents CO_2 plus the additional warming potential from CH_4 and N_2O. CH_4 and N_2O have 21 and 310 times the warming potential of CO_2, respectively.

Auxiliary Boiler

Operating Hours		2,190	hr/yr			
HRSG Heat Input		142	MMBtu/hr			
CO_2 =	16,418	tonne/yr				
CH_4 =	2	tonne/yr =	39	tonne CO_2e/yr		
N_2O =	0.03	tonne/yr =	10	tonne CO_2e/yr	Total tonne CO_2e/yr =	16,466

Emergency Generators

Operating Hours		50	hr/yr			
HRSG Heat Input		2,800	Bhp			
CO_2 =	3,201	lb/hr =	73	tonne CO_2/yr		
CH_4 =	0.09	lb/hr =	0.045	tonne CO_2e/yr		
N_2O =	0.03	lb/hr =	0.2218	tonne CO_2e/yr	Total tonne CO_2e/yr* =	146

The following conversions were used to convert from lb/gallon to lb/hp-hour; and then multiplying by the rated horsepower rating: 1 gallon/137,000 Btu; and 7,000 Btu/hp-hour.

* Total tonnes CO_2e per year represent the contributions from both generators.

Fire Water Pump

Operating Hours		100	hr/yr			
HRSG Heat Input		556	Bhp			
CO_2 =	636	lb/hr =	29	tonne CO_2/yr		
CH_4 =	0.02	lb/hr =	0.018	tonne CO_2e/yr		
N_2O =	0.01	lb/hr =	0.0881	tonne CO_2e/yr	Total tonne CO_2e/yr =	29

The following conversions were used to convert from lb/gallon to lb/hp-hour; and then multiplying by the rated horsepower rating: 1 gallon/137,000 Btu; and 7,000 Btu/hp-hour.

Hydrogen Energy, Inc *10/7/2009*
HECA Amendment

GHG emissions are numerically depicted as metric tons (tonne) of carbon dioxide equivalents (CO_2e). CO_2e represents CO_2 plus the additional warming potential from CH_4 and N_2O. CH_4 and N_2O have 21 and 310 times the warming potential of CO_2, respectively.

Gasification Flare

Pilot Operation						
Operating Hours		8,760	hr/yr			
HRSG Heat Input		0.5	MMBtu/hr			
CO_2 =	231	tonne/yr				
CH_4 =	0.03	tonne/yr =	0.5	tonne CO_2e/yr		
N_2O =	0.0004	tonne/yr =	0.1	tonne CO_2e/yr	Total tonne CO_2e/yr =	232
Flaring Events						
Total Operation		115,500	MMBtu/yr			
CO_2 =	6,098	tonne/yr				
CH_4 =	0.7	tonne/yr =	14	tonne CO_2e/yr		
N_2O =	0.01	tonne/yr =	4	tonne CO_2e/yr	Total tonne CO_2e/yr =	6,116

GHG emissions from flaring events are conservatively estimated using GHG emission factors for natural gas combustion.

Hydrogen Energy, Inc *10/7/2009*
HECA Amendment

GHG emissions are numerically depicted as metric tons (tonne) of carbon dioxide equivalents (CO_2e). CO_2e represents CO_2 plus the additional warming potential from CH_4 and N_2O. CH_4 and N_2O have 21 and 310 times the warming potential of CO_2, respectively.

SRU Flare

Pilot Operation						
Operating Hours		8,760	hr/yr			
HRSG Heat Input		0.3	MMBtu/hr			
CO_2 =	139	tonne/yr				
CH_4 =	0.02	tonne/yr =	0.3	tonne CO_2e/yr		
N_2O =	0.0003	tonne/yr =	0.08	tonne CO_2e/yr	Total tonne CO_2e/yr =	139
Flaring Events (assist gas)						
Operating Hours		6	hr/yr			
HRSG Heat Input		36	MMBtu/hr			
CO_2 =	11	tonne/yr				
CH_4 =	0.001	tonne/yr =	0.03	tonne CO_2e/yr		
N_2O =	0.00002	tonne/yr =	0.007	tonne CO_2e/yr	Total tonne CO_2e/yr =	11
Throughput (inerts)						
H_2S =		25	%			
CO_2 (inerts) =		75	%			
H_2S =		72	lbmol/hr			
CO_2 (inerts) =		216	lbmol/hr			
CO_2 (inerts) =		9,488	lb/hr			
Operating Hours		6	hr/yr			
					Total tonne CO_2e/yr =	26

GHG emissions from flaring events are conservatively estimated using GHG emission factors for natural gas combustion.
Throughtput (inerts) amount calculated from the relationship of CO2 to H2S in the SRU Flare.

Hydrogen Energy, Inc *10/7/2009*
HECA Amendment

GHG emissions are numerically depicted as metric tons (tonne) of carbon dioxide equivalents (CO_2e). CO_2e represents CO_2 plus the additional warming potential from CH_4 and N_2O. CH_4 and N_2O have 21 and 310 times the warming potential of CO_2, respectively.

Rectisol Flare

Pilot Operation						
Operating Hours		8,760	hr/yr			
HRSG Heat Input		0.3	MMBtu/hr			
CO_2 =	139	tonne/yr				
CH_4 =	0.02	tonne/yr =	0.3	tonne CO_2e/yr		
N_2O =	0.0003	tonne/yr =	0.08	tonne CO_2e/yr	Total tonne CO_2e/yr =	139

GHG emissions from flaring events are conservatively estimated using GHG emission factors for natural gas combustion.

Tail Gas Thermal Oxidizer

Process Vent Disposal Emissions						
Operating Hours		8,760	hr/yr			
HRSG Heat Input		10	MMBtu/hr			
CO_2 =	4,625	tonne/yr				
CH_4 =	0.52	tonne/yr =	10.9	tonne CO_2e/yr		
N_2O =	0.0088	tonne/yr =	2.7	tonne CO_2e/yr	Total tonne CO_2e/yr =	4,638
SRU Startup Waste Gas Disposal						
Operating Hours		300	hr/yr			
HRSG Heat Input		10	MMBtu/hr			
CO_2 =	158	tonne/yr				
CH_4 =	0.018	tonne/yr =	0.37	tonne CO_2e/yr		
N_2O =	0.00030	tonne/yr =	0.093	tonne CO_2e/yr	Total tonne CO_2e/yr =	159

GHG emissions from flaring events are conservatively estimated using GHG emission factors for natural gas combustion.

Hydrogen Energy, Inc *10/7/2009*
HECA Amendment

GHG emissions are numerically depicted as metric tons (tonne) of carbon dioxide equivalents (CO_2e). CO_2e represents CO_2 plus the additional warming potential from CH_4 and N_2O. CH_4 and N_2O have 21 and 310 times the warming potential of CO_2, respectively.

Intermittent CO_2 Vent

Operating Hours	504	hr/yr		
CO_2 Emission Rate	656,000	lb/hr		
			Total tonne CO_2e/yr =	150,011

Assumes 21 days per year venting at full rate.

Gasifier Warming

Operating Hours		1,800	hr/yr			
HRSG Heat Input		18	MMBtu/hr			
CO_2 =	1,711	tonne/yr				
CH_4 =	0	tonne/yr =	4	tonne CO_2e/yr		
N_2O =	0.00	tonne/yr =	1	tonne CO_2e/yr	Total tonne CO_2e/yr =	1,716

Total tonne CO_2e/yr =	**503,237**

URS

October 19, 2009

Rod Jones
Project Manager
California Energy Commission
1516 Ninth Street
Sacramento, CA 95814

RE: Hydrogen Energy California Revised AFC
CEC Docket No. 08-AFC-8

On behalf of Hydrogen Energy International LLC, the applicant for the Hydrogen Energy California Revised AFC, we are pleased to submit the enclosed documents:

- One print copy of the October 2009 Amendment to Prevention of Significant Deterioration Permit Application, and a DVD containing revised air quality modeling files, which were submitted to the US Environmental Protection Agency on October 7, 2009;
- One print copy of the October 2009 Amendment to the Authority to Construct Permit Application, and a DVD containing revised air quality and public health modeling files, which were submitted to the San Joaquin Valley Air Pollution Control District on October 7, 2009.

URS Corporation

Dale Shileikis
Vice President, Project Manager

Enclosures

cc: Greg Skannal, HEI, w/out enclosure

URS Corporation
221 Main Street, Suite 600
San Francisco, CA 94105
Tel: 415.869.5858
Fax: 415.882.9261
www.urscorp.com

J:\HECA-2\ATC_PSD\Transmittal_RJones_19 Oct 2009.doc

hydrogen energy

October 7, 2009

Leonard Scandura
Permit Services Manager
San Joaquin Valley Air Pollution Control District
Southern Regional Office
34946 Flyover Court
Bakersfield, CA 93308

Subject: **Submittal of Amendment to the Application for Authority to Construct – Hydrogen Energy California SJVAPCD Project S-1093741**

Dear Mr. Scandura:

Hydrogen Energy International LLC (HEI) proposes to modify the nominally rated 250 (approximate) net megawatt (MW) integrated gasification combined cycle power generation unit proposed at a greenfield site in Kern County, California. The attached document is an Amendment to the Authority to Construct / Permit to Operate Application to the San Joaquin Valley Air Pollution Control District (SJVAPCD) for the "HECA" project.

The Applicant is modifying the Project to eliminate the auxiliary combustion turbine generator (CTG) and demonstrate its emissions of particulates less than 2.5 microns in diameter ($PM_{2.5}$) will be below the 100 tons per year (tpy) $PM_{2.5}$ Air Quality Standard threshold.

An Amendment to the Revised Application for Certification for this unit was filed with the California Energy Commission dated September 2009 (Docket # 08-AFC-8). An Amendment to the Prevention of Significant Deterioration (PSD) application will be filed with the Environmental Protection Agency, Region IX.

The enclosed application amendment includes supporting information, as well as a DVD containing electronic copies of revised air quality and public health modeling input and output files. Please contact Gregory Skannal, HEI at (562) 276-1511 or Mark Strehlow at (510) 874-3055 if you have any questions or require additional information.

One World Trade Center, Suite 1600, Long Beach, CA 90831-1600 Main (+1) 562-276-1543 Fax (+1) 562-276-1571 www.hydrogenenergy.com

Sincerely,

Gregory D. Skannal
Manager, HSSE
Hydrogen Energy International LLC

Attachment: Application

Copy: Mark Strehlow, URS
California Energy Commission