Oxy CO_2 EOR Project

Proposed MRV Plan

Presentation Overview

- **Introduction**
  - **MRV plan development**
  - **Project overview**
  - **MRV plan overview**
- Assessment of Risk of Leakage
- Monitoring Program
- Determining Sequestration Volumes
- Other Topics in the MRV Plan

MRV Plan Context

- Site-specific MRV plan is tailored for Oxy's Elk Hills oil field and the HECA AFC
- Oxy would use CO_2 captured from HECA for EOR, resulting in CO_2 sequestration
- MRV plan intended to measure and verify amounts of HECA CO_2 sequestered by Oxy CO_2 EOR Project

OXY's MRV Plan Development

- Reviewed Institutional Models:
  - EPA Greenhouse Gas Reporting Rule Subparts W and RR
  - EPA UIC Class VI rules and comments
  - UIC Class II permit criteria
  - California SB 1368 Emission Performance Standard Requirements
- Consulted with:
  - Internal experts from multi-disciplines across Oxy
  - HECA
  - External experts from various environmental groups
  - External experts from academia
  - CEC through AFC process

The CO_2 EOR Process at Elk Hills

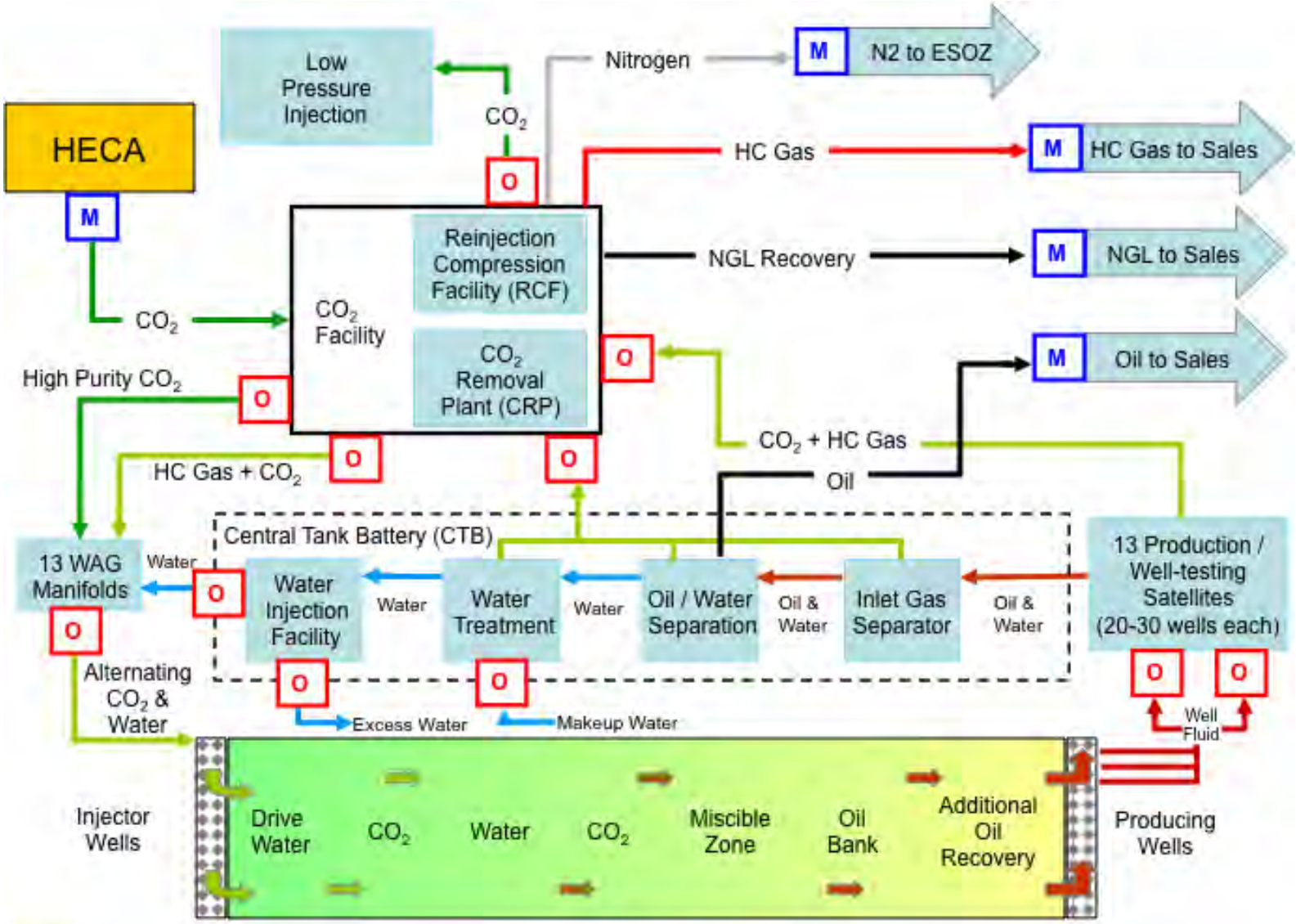

M Custody Transfer Meter & CO_2 Analyzer / Sampler

O Operations Meter for Total CO_2, HC Gas, Water, Oil

Key Questions Addressed

- What does the Oxy CO_2 EOR Project entail?
- Why is Elk Hills a good location for the Project?
- How do we know injected CO_2 will not leak to the surface?
- How will we monitor behavior of injected CO_2 and confirm it remains within target reservoirs?
- How much CO_2 will be sequestered?

Oxy CO_2 EOR Project MRV Plan

- Part 1 – Summary
- Part 2 – Detailed Project Description
- Part 3 – Assessment of Risk of Leakage
- Part 4 – Monitoring Program
- Part 5 – Determining Sequestration Volumes
- Part 6 – Monitoring, Reporting, and Verification
- Part 7 – Monitoring: Quality Assurance / Quality Control

Presentation Overview

- Introduction
- **Assessment of Risk of Leakage**
  - **Site characterization**
  - **Potential leakage pathway identification**
  - **Potential leakage pathway assessment**
- Monitoring Program
- Determining Sequestration Volumes
- Other Topics in the MRV Plan

The Oxy CO_2 EOR Target Reservoirs

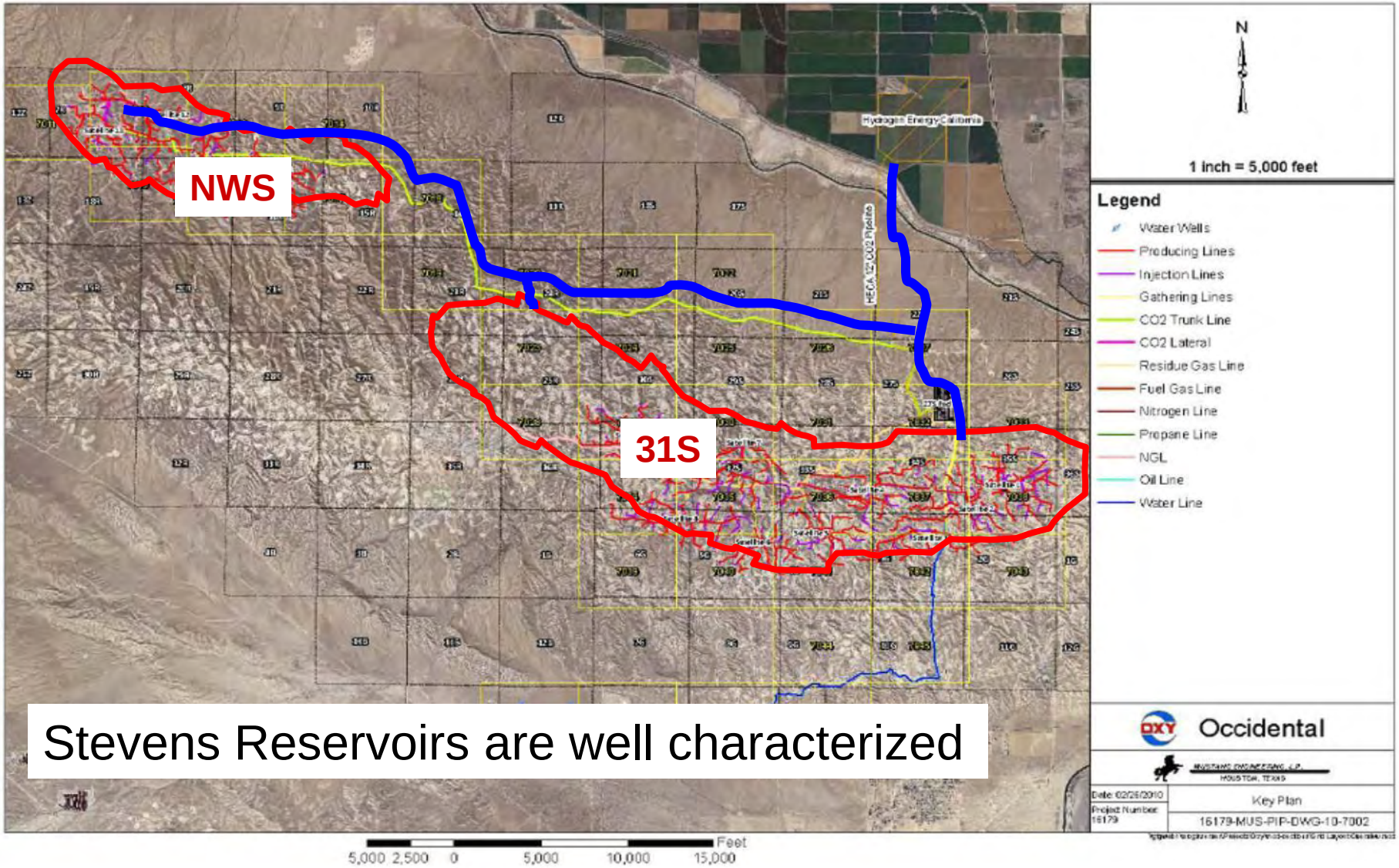

Stevens Reservoirs are well characterized

Elk Hills Geology Ideally Suited for CO_2 EOR

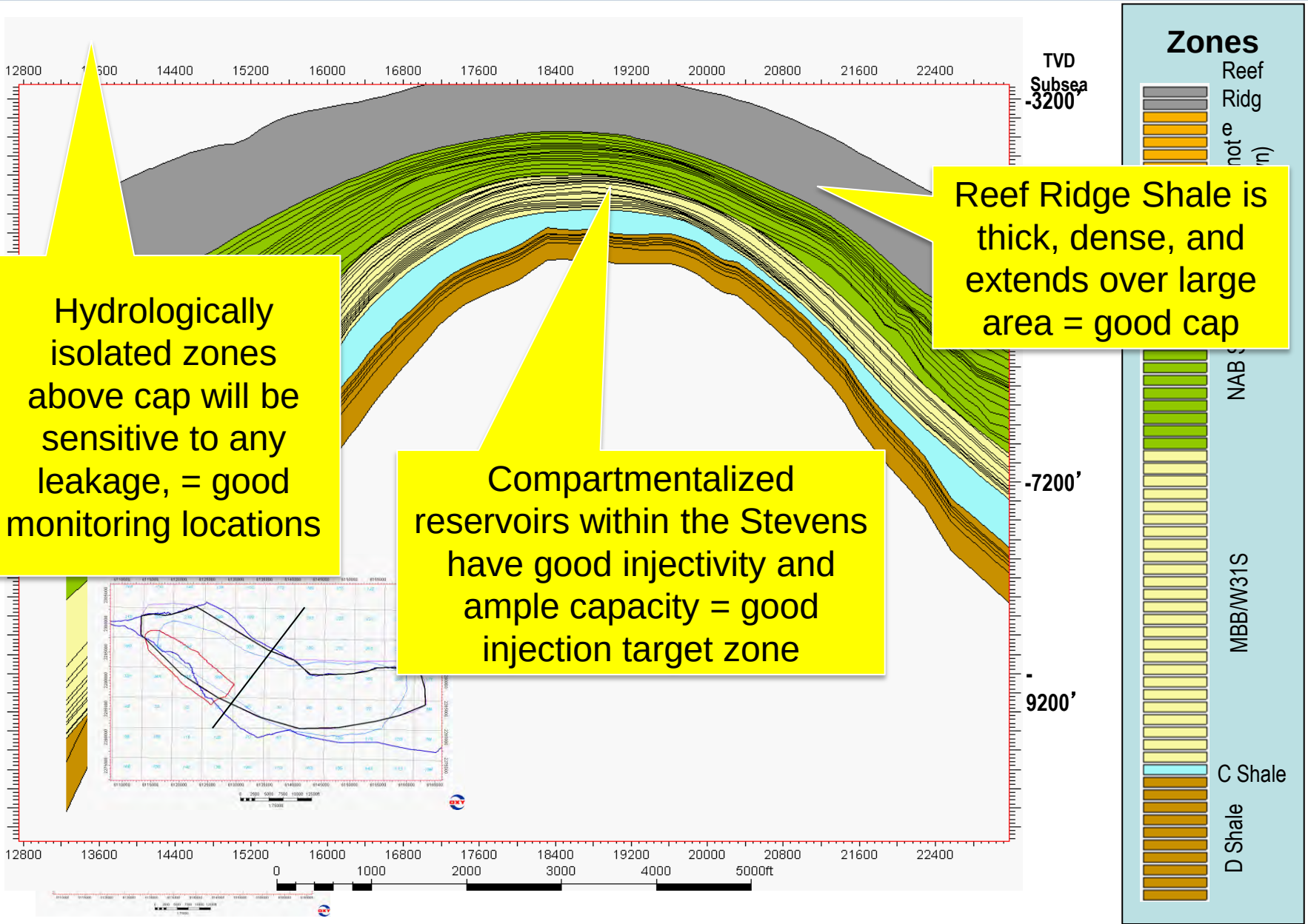

Multiple Seals

- Elk Hills has a number of seals and production zones that have contained separate pools of oil and gas for millions of years
- Longstanding and active field development provides extensive and well-documented subsurface database

Note: Image is intended to be illustrative and is not a cross section at Elk Hills,

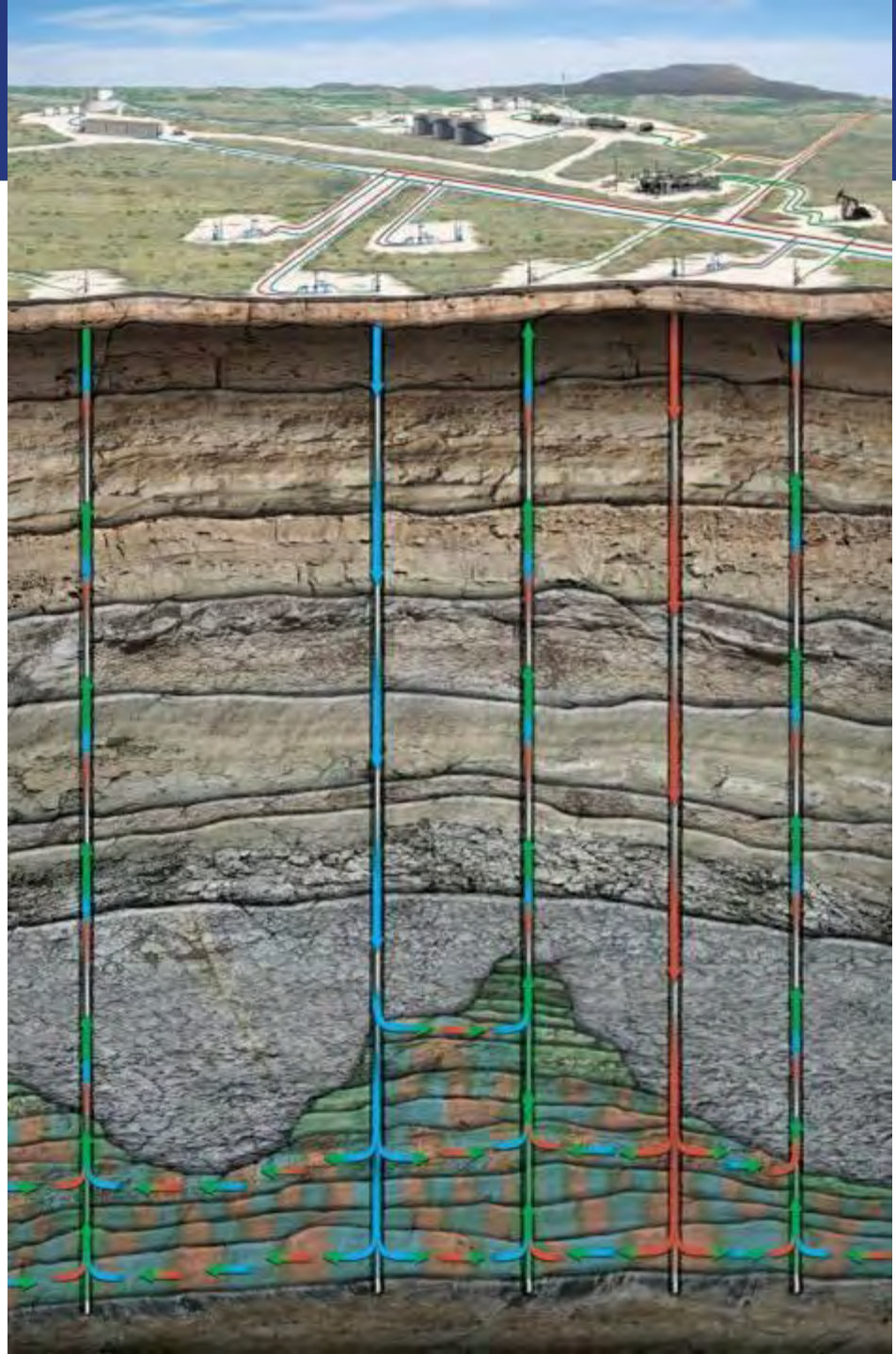

Multiple Layers Within the Stevens Reservoirs

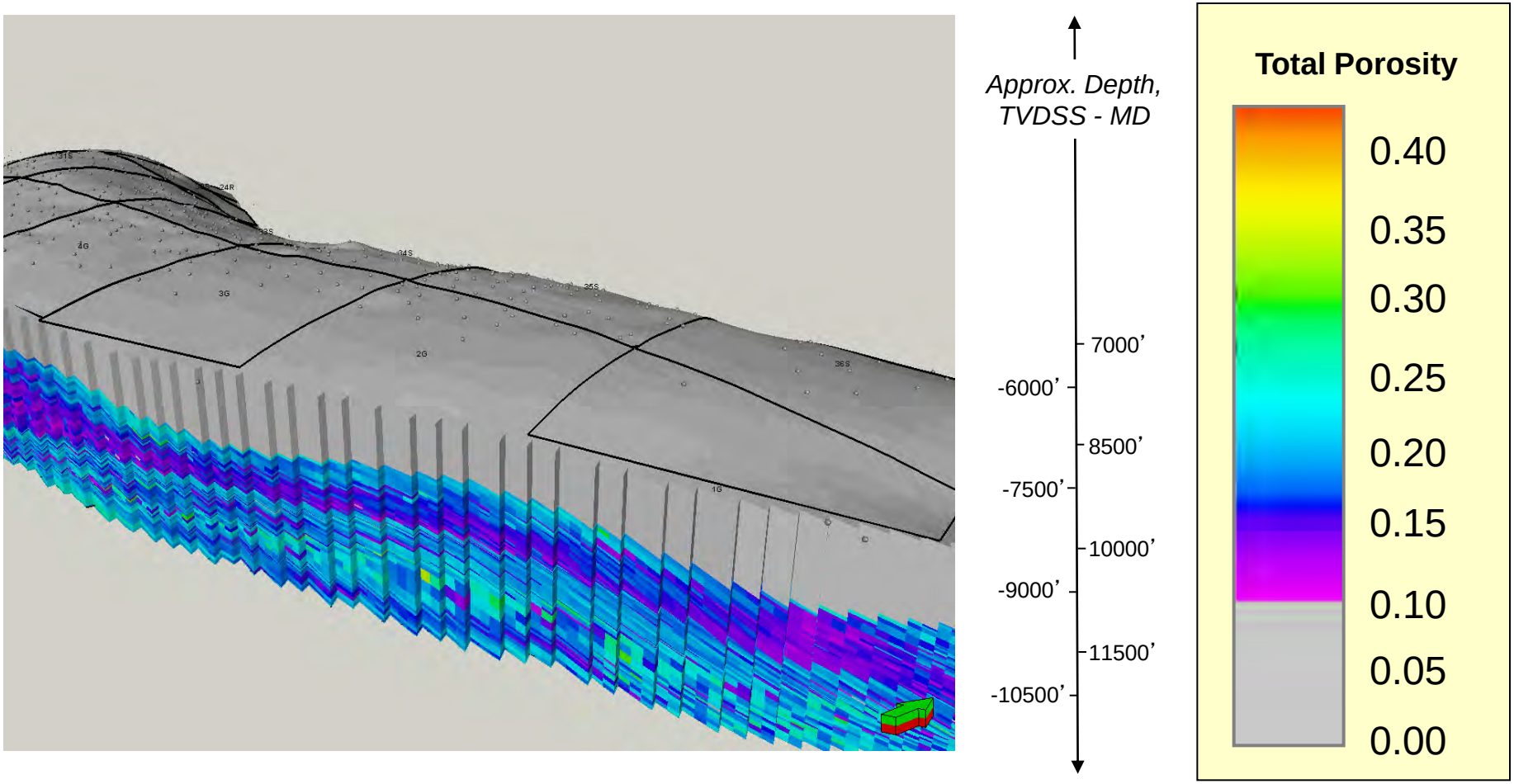

Large field size and multiple reservoirs ensure long-lived EOR project, sufficient storage capacity for volume of CO_2. Main Body B (MBB) is the primary target for injection and is within the Stevens Reservoirs.

Evaluation of Potential Leakage Pathways

- Faults & Fractures
- Natural and Induced Seismic Activity
- Existing Well Bores
- Previous Operations
- Pipeline & Surface Equipment
- Overfill Through Lateral Spillpoints
- Dissolution of CO_2 into Formation Fluid
- New Drilling

Leakage Pathway Assessment

- The structure and stratigraphy of Elk Hills oil field is ideally suited for injection and trapping of CO2
- Existing and future wells present little risk of release to the surface
- Faults are non-transmissive through Reef Ridge Shale within project boundaries
- No other potential leakage pathways are considered significant

No leakage pathways identified that would result in significant leakage of CO_2

Presentation Overview

- Introduction
- Assessment of Risk of Leakage
- **Monitoring Program**
  - **Informed by reservoir modeling**
  - **Main components**
- Determining Sequestration Volumes
- Other Topics in the MRV Plan

Monitoring Plan

- Informed by modeling of behavior of injected CO_2
- Includes four main components:
  - Monitoring wells in zone above Reef Ridge Shale
  - Surface inspection of facilities and wellsites
  - Monitoring of the CO_2 injection
  - Measurement of incidental and operational losses

CO_2 in MBB After 20 Years

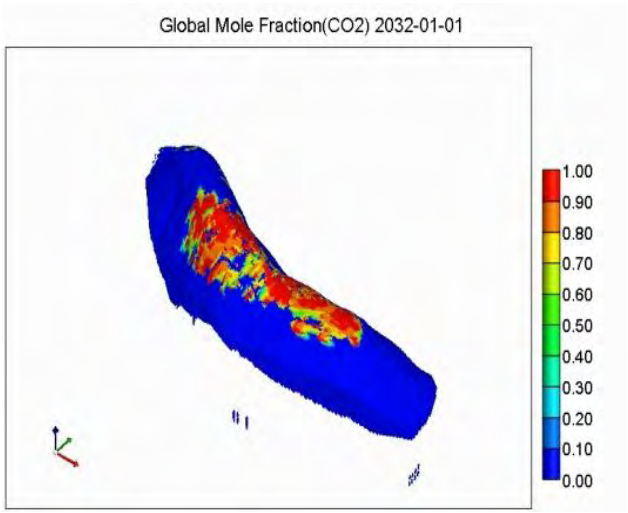

"Birdseye view" at top and mid-depth

Vertical extent

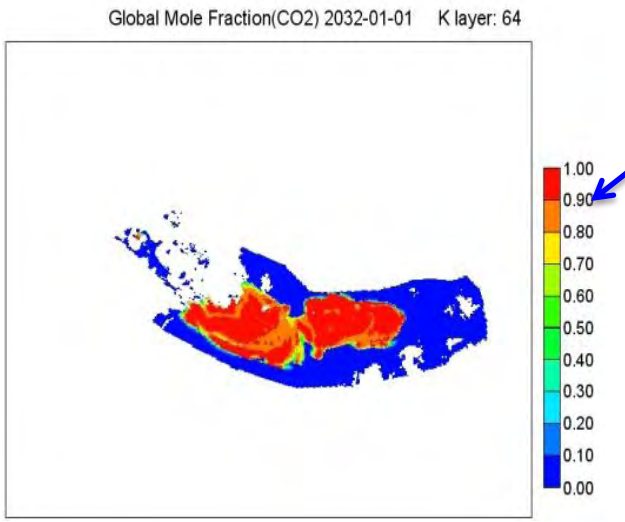

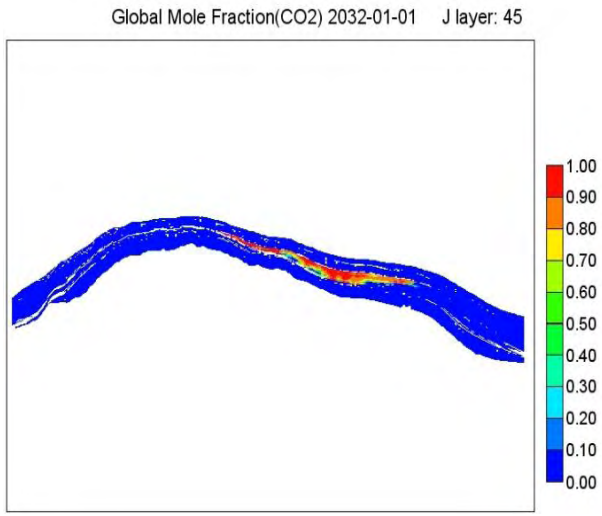

External model built by CMG using GEM Simulator

CO_2 in MBB After 138 Years

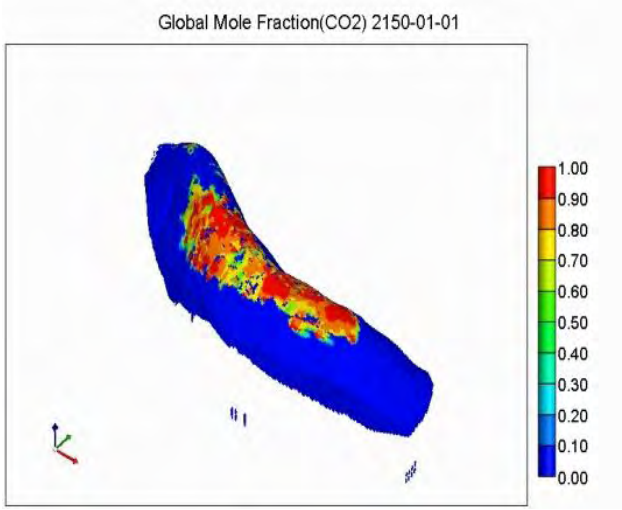

"Birdseye view" at top and mid-depth

Vertical extent

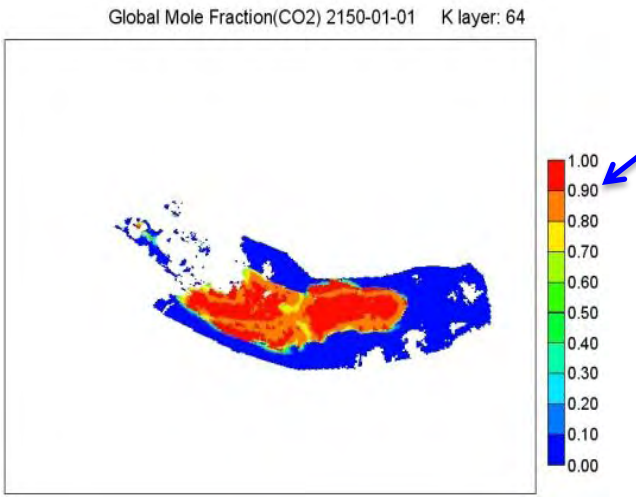

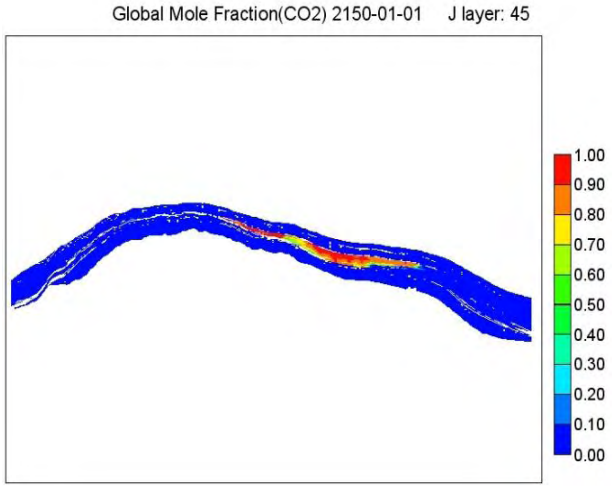

External model built by CMG using GEM Simulator

Predicted Behavior of Injected CO_2

- After 250 years, 100% injected CO_2 still remains within the MBB within the Stevens
- Reef Ridge Shale can tolerate 7,500psi, more than 3,000psi above reservoir pressure
- Injected CO_2 will be contained laterally by Reef Ridge Shale
- The Stevens Reservoirs can contain all of the HECA CO_2

1. Monitoring Above the Reef Ridge Shale

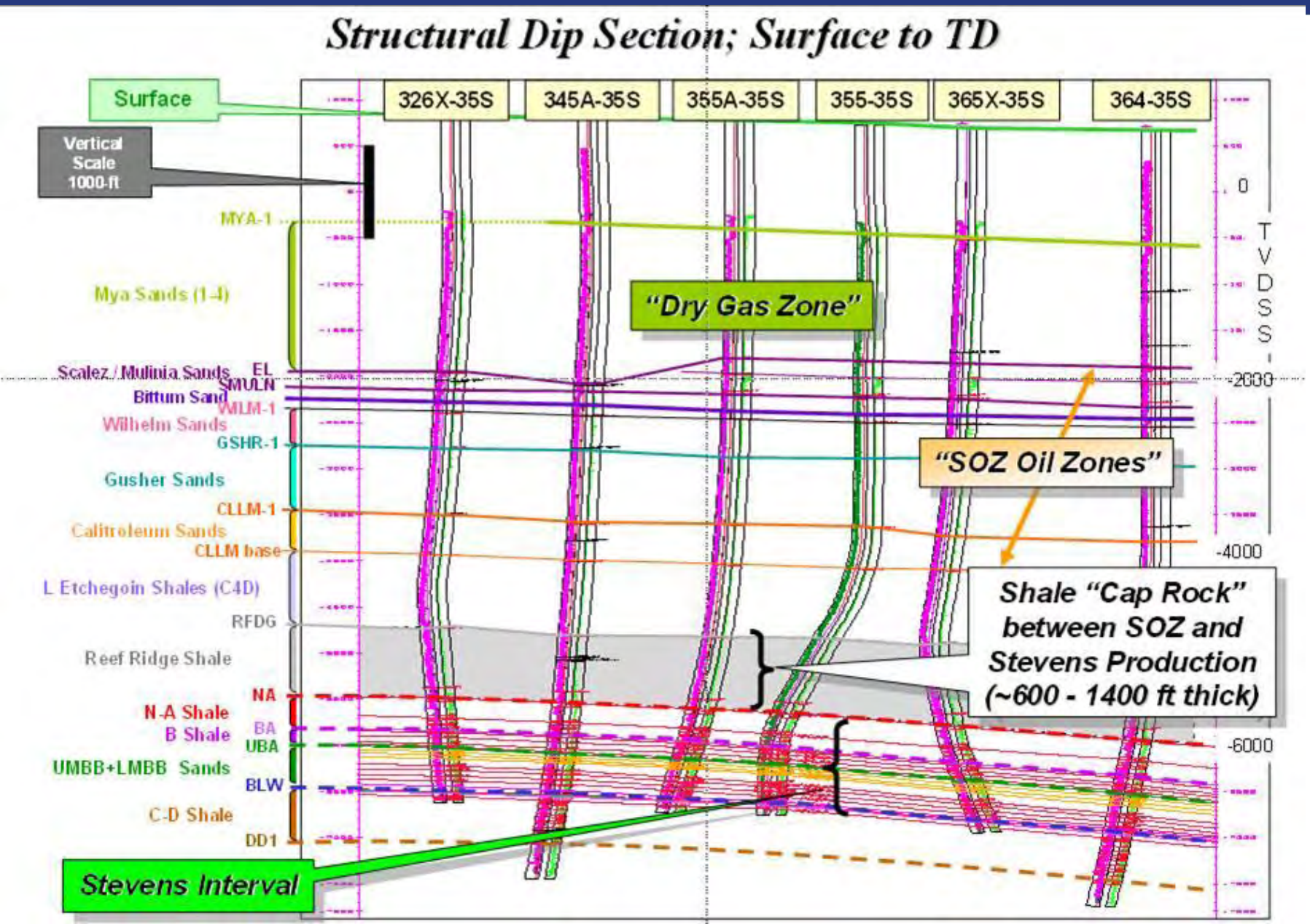

2. Surface Inspection

- When CO_2 leaks to the atmosphere it decompresses
  - Highly audible
  - Rapid cooling that forms visible vapor or ice
- The subsurface reservoirs being used for this project are well delineated and under the control of Oxy
- Oxy teams perform daily facility inspections and weekly well-site inspections

3. Monitoring the CO_2 Injection Operations

- Oxy will use an injection and performance plan for each well; this will include a projection of the rate and volume of CO_2 injection
  - Integral to the economic operation of the CO_2 EOR project
  - Any variances from relevant baselines will be investigated
  - Variances do not necessarily indicate leakage but may indicate opportunities to improve performance
- If variance indicates migration from the Stevens reservoirs, Oxy will report it promptly

4. Measuring Incidental and Operational CO_2 Losses

- Oxy currently reports measured and estimated incidental and operational emissions under air quality permits and regulations
  - Emissions sources include: valves, connectors, flanges, open-ended lines, compressor equipment, vents, pumps, meters, and other potential fugitive sources
- Oxy follows similar procedures consistent with US EPA GHG Reporting Rules and ARB rules
  - Procedures in place to estimate incidental and operational CO_2 losses

Presentation Overview

- Introduction
- Project Description
- Assessment of Risk of Leakage
- Monitoring Program
- **Determining Sequestration Volumes**
- Other Topics in the MRV Plan

How Much CO_2 Will Be Sequestered Through EOR?

Material Mass Balance Equation:

CO_2 transferred to Oxy

- CO_2 measured in products moved offsite
- CO_2 emitted through leakage (if any)
- Incidental and operational losses of CO_2

= CO_2 Sequestered

The CO_2 EOR Process at Elk Hills

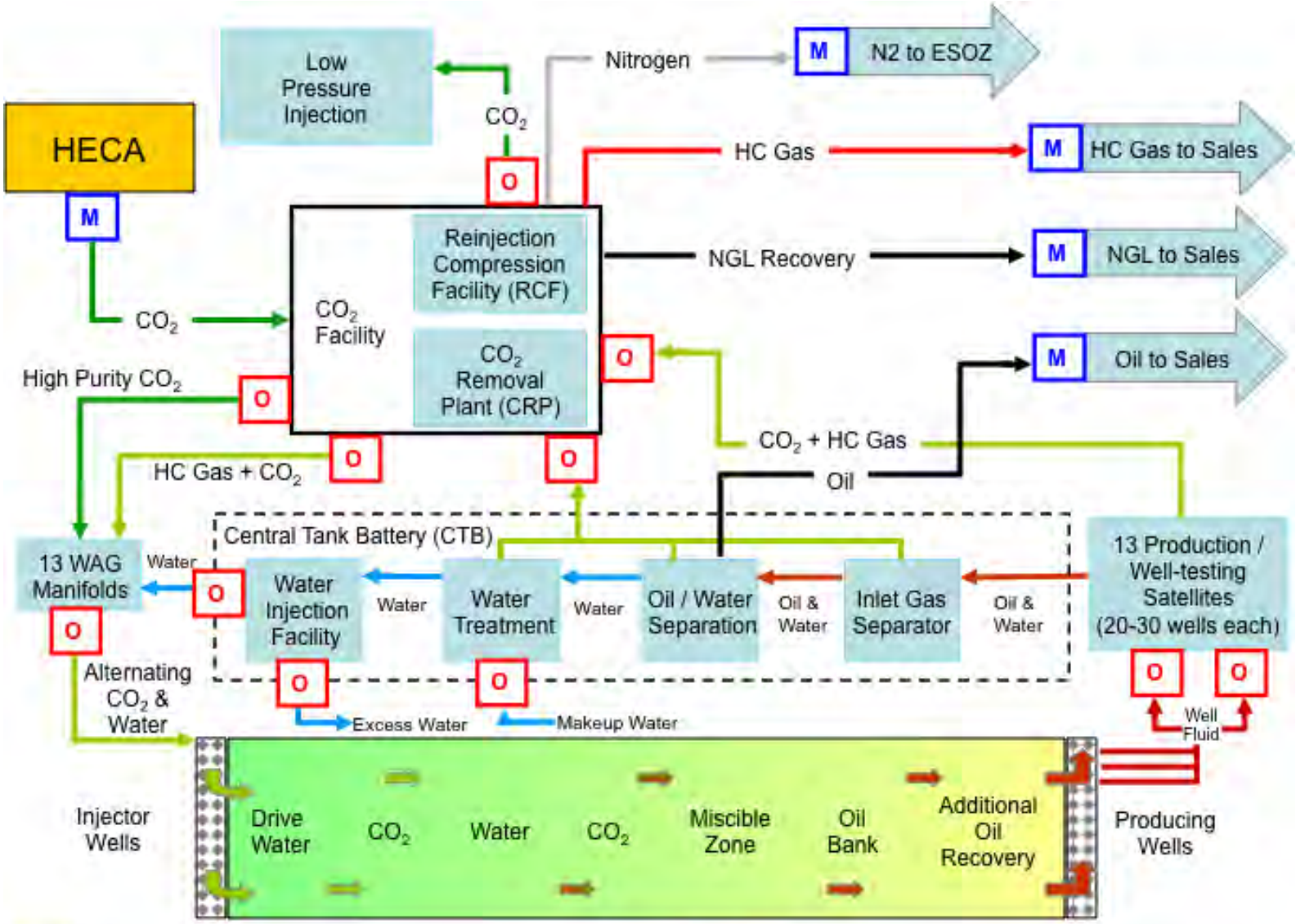

M Custody Transfer Meter & CO_2 Analyzer / Sampler

O Operations Meter for Total CO_2, HC Gas, Water, Oil

Presentation Overview

- Introduction
- Project Description
- Assessment of Risk of Leakage
- Monitoring Program
- Determining Sequestration Volumes
- **Other Topics in the MRV Plan**

Activities After Injection Ceases

- Remove surface equipment
- Verify location of injected CO_2
- Confirm integrity of Reef Ridge Shale
- Confirm integrity of well bores

Other Items in the MRV Plan

- Data Handling
- Missing Data Procedures
- Reporting and Recordkeeping
- Monitoring System Maintenance
- QA/QC
- MRV Plan Adjustments