URS

DOCKET	
08-AFC-8	
DATE	JAN 08 2010
RECD.	JAN 08 2010

January 8, 2010

Dockets Unit
California Energy Commission
1516 Ninth Street, MS 4
Sacramento, CA 95814

RE: Hydrogen Energy California Project
Application for Certification 08-AFC-8

On behalf of Hydrogen Energy International LLC, the applicant for the above-referenced Hydrogen Energy California AFC, we are pleased to submit the enclosed document:

- One print copy of *Responses to CEC Data Requests Set One (#1, 2, 11, 17, 31b, 32, 33, 36, 64f, 85 through 90, and 125 through 132)*

The Responses to Data Requests document has been provided electronically to the Dockets Unit and to all parties listed on the Proof of Service list.

URS Corporation

Dale Shileikis
Vice President, Environmental Services

Enclosures

CC: Rod Jones (w/o enclosure)

URS Corporation
221 Main Street, Suite 600
San Francisco, CA 94105
Tel: 415.896.5858
Fax: 415.882.9261
www.urscorp.com

Responses to CEC Data Requests Set One (Nos. 1, 2, 11, 17, 31b, 32, 33, 36, 64f, 85 through 90, and 125 through 132)

Revised Application for Certification (08-AFC-8) for HYDROGEN ENERGY CALIFORNIA Kern County, California

Prepared for:
Hydrogen Energy International LLC

hydrogen energy

Submitted to:
California Energy Commission

Prepared by:
URS

January 2010

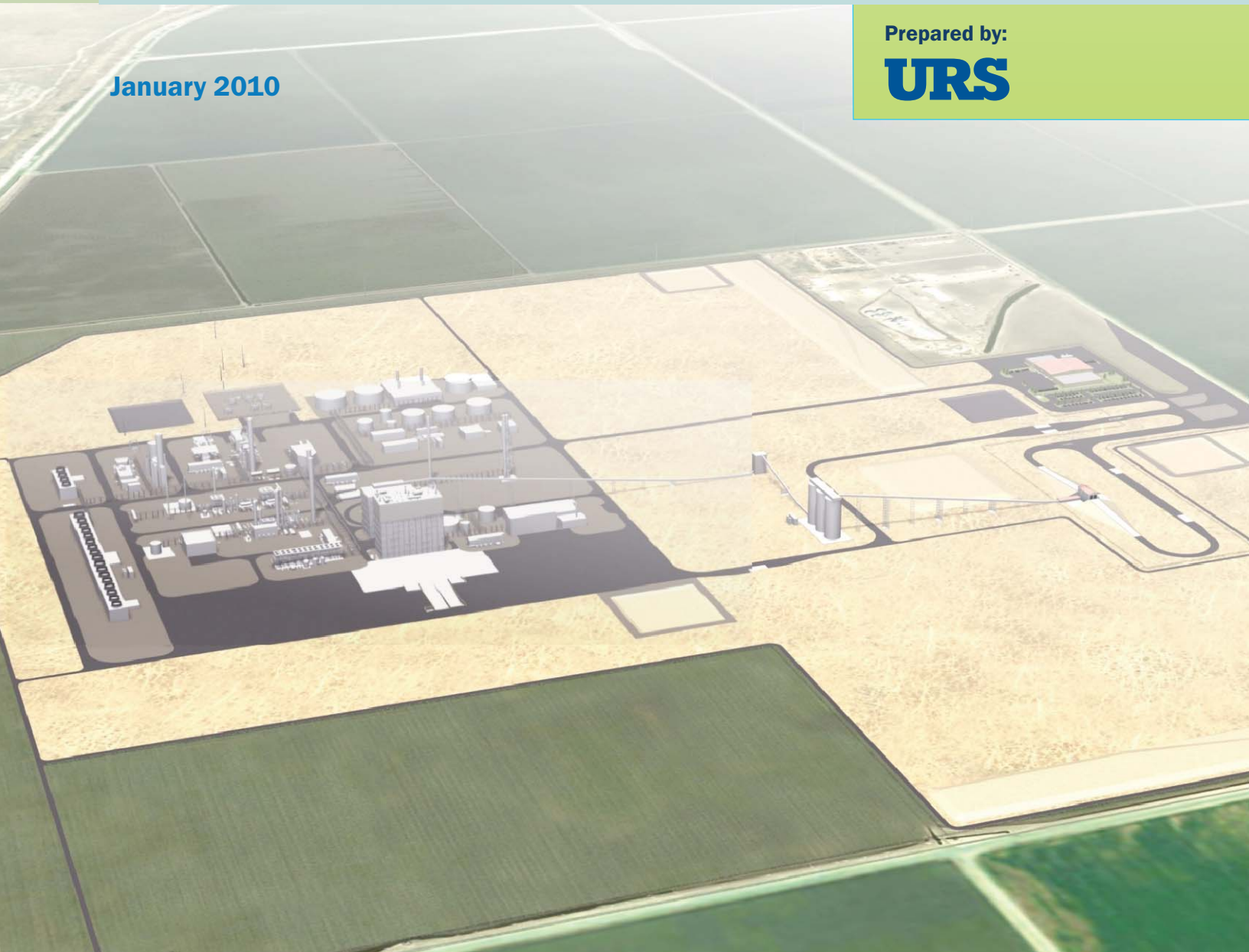

TABLE OF CONTENTS

RESPONSES TO CEC DATA REQUESTS SET ONE – NOS. 1, 2, 11, ET AL.

AIR QUALITY
1, 2, 11, 17, 31B, 32, 33, AND 36

CULTURAL RESOURCES
64F

PUBLIC HEALTH
85 THROUGH 90

VISUAL RESOURCES
125 THROUGH 132

This material is based upon work supported by the Department of Energy National Energy Technology Laboratory under Award Number DE-FE0000663.

This report was prepared as an account of work sponsored by an agency of the United States Government. Neither the United States Government nor any agency thereof, nor any of their employees, makes any warranty, express or implied, or assumes any legal liability or responsibility for the accuracy, completeness, or usefulness of any information, apparatus, product, or process disclosed, or represents that its use would not infringe privately owned rights. Reference herein to any specific commercial product, process, or service by trade name, trademark, manufacturer, or otherwise does not necessarily constitute or imply its endorsement, recommendation, or favoring by the United States Government or any agency thereof. The views and opinions of authors expressed herein do not necessarily state or reflect those of the United States Government or any agency thereof.

ATTACHMENTS

Attachment 11-1 HECA Overall Component Balances
Attachment 32-1 Public Records Request Submitted to the San Joaquin Valley Air Pollution Control District
Attachment 32-2 List of Emissions Sources Provided by the San Joaquin Valley Air Pollution Control District

TABLES

Revised Table 2-11 Representative Heat and Material Balances
Table 125-1 Summary of CTG/HRSG Exhaust Condition Parameters
Table 126-1 Power Block Cooling Tower Heat Rejection and Exhaust Air Flow Totals
Table 126-2 Gasification Block Cooling Tower Exhaust Air Flows and Temperatures and Heat Rejection Loads
Table 128-1 Air Separation Unit Cooling Tower Exhaust Air Flows and Temperatures and Heat Rejection Loads
Table 130-1 Air Separation Unit Cooling Tower Exhaust Air Flows and Temperatures and Heat Rejection Loads
Table 130-2 Power Block Cooling Tower Exhaust Air Flows and Temperatures and Heat Rejection Loads
Table 130-3 Gasification Block Cooling Tower Exhaust Air Flows and Temperatures and Heat Rejection Loads
Table 130-4 Air Separation Unit Cooling Tower Exhaust Air Flows and Temperatures and Heat Rejection Loads
Table 131-1 Representative Cooling Tower Manufacturer and Model Information

FIGURES

Figure 32-1 SJVAPCD Identified Sources Near HECA

LIST OF ACRONYMS AND ABBREVIATIONS USED IN RESPONSES

AFC	Application for Certification
AR	as received
ASU	air separation unit
CEC	California Energy Commission
CO	carbon monoxide
CO_2	carbon dioxide
CTG	combustion turbine generator
°F	degrees Fahrenheit
gpm	gallons per minute
H_2	hydrogen
HECA	Hydrogen Energy California
HHV	higher heating value
HRSG	heat recovery steam generator
IGCC	integrated gasification combined cycle
kg/s	kilogram per second
kpph	kilopascals per hour
MMBtu/hr	million British thermal units per hour
MMlb/hr	million pounds per hour
mmscfd	million standard cubic feet per day
MW	megawatt
MWth	megawatt, thermal
PM_{10}	particulate matter less than 10 microns in diameter
SJVAPCD	San Joaquin Valley Air Pollution Control District
stpd	short tons per day
wt%	percent weight

Technical Area: Air Quality
Author: William Walters

BACKGROUND

In order to evaluate the air quality impacts from this project the baseline conditions of the Project Site need to be understood.

DATA REQUEST

1. Please describe the types of activities that emit combustion and fugitive dust emissions on the site currently and the quantities of the criteria pollutant emissions that occur from those activities.

RESPONSE

To respond to this data request and also to Data Request Nos. 32 and 33, the Applicant completed and submitted a Public Records Request Form to the San Joaquin Valley Air Pollution Control District (SJVAPCD) on October 26, 2009, asking in part for any emissions information regarding the Port Organics facility that recently ceased operations on the Project Site and adjacent Controlled Area. In addition, that same request asked for information about any other sources on the Project Site for which the SJVAPCD had records, including agricultural emissions.

The information provided by SJVAPCD did not identify any newly permitted sources or recent permit applications for any sources currently occupying the Project Site or Controlled Area (see the response to Data Request 32 in this document for the information received from SJVAPCD). In addition, SJVAPCD staff confirmed via phone contact that the name "Port Organics" does not appear on the list of companies holding air permits in Kern County. Therefore, the Applicant concludes that there are no current SJVAPCD-regulated activities on the Project Site.

Agricultural activities (typically exempt from SJVAPCD regulations) occurring on the 628-acre Controlled Area portion of the Hydrogen Energy California (HECA) property could continue. Therefore, there would be no change in emissions related to agricultural activities in the Controlled Area. Agricultural activities within the 473-acre Project Site would be discontinued. SJVAPCD was asked for recommendations for emission factors applicable to the fugitive dust emissions and the fuel combustion emissions from mobile sources for the types of agricultural activities present, but offered none. Although there may be a reduction in localized air emissions as a result of cessation of agricultural activities at the Project Site, the Applicant is not claiming any credit for the reduction of agricultural activity air pollutant emissions from the 473-acre Project Site at this time.

DATA REQUEST

2. Please describe whether those activities will be permanently discontinued from the entire project site when the project is completed and estimate the reductions from the current onsite baseline emissions.

RESPONSE

See response to Data Request 1. At this time, the Applicant is not claiming any credit for reductions to baseline emissions from the Project Site and Controlled Area.

BACKGROUND

The AFC does not provide energy and mass balances that are necessary for staff to fully understand the gasification technology and its emission sources. Additionally, some technical details on the gasification process need clarification. Staff needs this information to understand the process and complete both its criteria pollutant impact analysis and its greenhouse gases (GHG) impact analysis.

DATA REQUEST

11. Please provide energy and mass balance data for the gasification process for both petroleum coke and coal. The mass balance data should clearly show carbon, water, sulfur, volatile organic compounds (VOC), toxic air contaminants (TACs), and total solids contents throughout the process.

RESPONSE

Attachment 11-1 contains two diagrams that show the mass balance data for carbon, sulfur, total inert solids, and water. Data are shown for the 75 percent coal/25 percent petroleum coke case and the 100 percent petroleum coke case. Information showing mass balance data for volatile organic compounds and toxic air contaminants is given in the response to Data Request No. 17A, and will be provided in the responses to Data Request Nos. 17B and 89. Please refer to those responses. Energy balance data was provided with the Revised Application for Certification (AFC). Please refer to Revised Table 2-11, Representative Heat and Material Balances, from the Amendment to the Revised AFC, included below.

Revised Table 2-11
Representative Heat and Material Balances

Operating Case	IGCC PG7321 (FB) Hydrogen-Rich Gas from		Combined Cycle PG7321 (FB) Natural Gas		
	100% Petcoke	75 % Coal/ 25 % Petcoke Blend[3]			
Ambient Temperature, °F	65 [1]	65 [1]	20	65	115
Feeds					
Feedstock, stpd (AR)	2,820	3,197	0	0	0
Feedstock, MMBtu/hr [HHV]	3,240	3,255	0	0	0
Fluxant, stpd	60	32	0	0	0
Natural Gas, MMBtu/hr [HHV]	0	0	2,560	2,410	2,310
Water, gpm	2,900	2,810	1,080	1,450	2,130
Products and By-Products					
Hydrogen, mmscfd [2]	177	177	0	0	0
Carbon Dioxide, stpd	7,400	7,300	0	0	0
Sulfur, stpd	130	40	0	0	0
Gasification Solids, stpd (wet)	140	470	0	0	0
Power Balance					
Combustion Turbine, MW	232	232	201	183	169
Steam Turbine, MW	160	156	148	146	142
H_2-Rich Fuel Expander, MW	2	2	0	0	0
Gross Power, MW	394	390	349	329	311
Total Auxiliary Load, MW	143	142	16	18	18
Air Separation Unit, MW	74	75	0	0	0
CO_2 Compression, MW	27	27	0	0	0
Other Internal Users, MW	42	40	16	18	18
Net Power, MW	251	248	333	311	293

Source: HECA Project

Notes:
[1] Ambient temperature variations have minimal effect on hydrogen-rich gas fueled combustion turbine generator output and gasification operation. Results are nearly constant for plant output across the ambient temperature range.
[2] Hydrogen contained in the hydrogen-rich gas used to fuel power generation equipment.
[3] Percentage is by thermal input (HHV basis)

AR = as received
CO^2 = carbon dioxide
°F = degrees Fahrenheit
gpm = gallons per minute
HHV = higher heating value
IGCC = integrated gasification combined cycle
MMBtu/hr = million British thermal units per hour
mmscfd = million standard cubic feet per day
MW = megawatt
stpd = short tons per day

ATTACHMENT 11-1
HECA OVERALL COMPONENT BALANCES

HECA Overall Component Balances

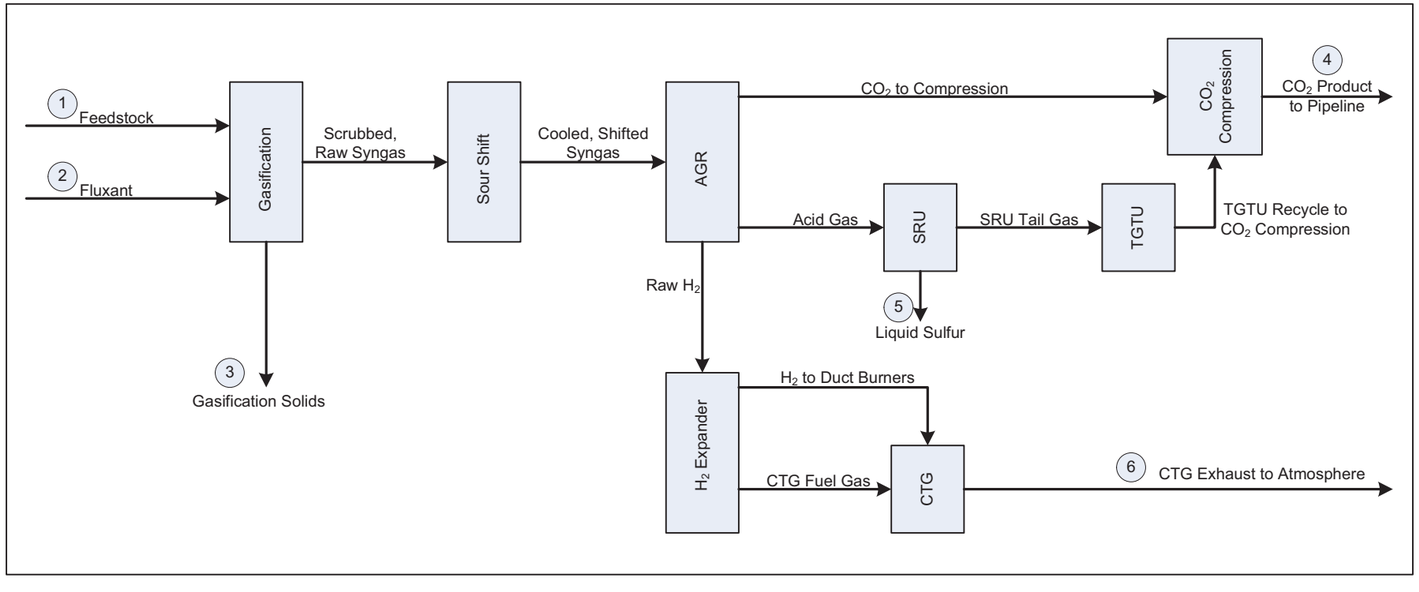

100% Petroleum Coke Feedstock

Carbon Balance:

Carbon In (lb/hr)	Carbon out (lb/hr)
(1) 186,000	(3) 200
(2) -	(4) 167,500
	(5) -
	(6) 18,300

Sulfur Balance:

Sulfur In (lb/hr)	Sulfur out (lb/hr)
(1) 10,600	(3) -
(2) -	(4) 10
	(5) 10,590
	(6) -

Inert Solids Balance:

Inert Solids In (lb/hr)	Inert Solids out (lb/hr)
(1) 800	(3) 5,600[1]
(2) 4,800	(4) -
	(5) -
	(6) -

75%Coal/25%PetCoke Feedstock

Carbon In (lb/hr)	Carbon out (lb/hr)
(1) 184,000	(3) 600
(2) -	(4) 166,400
	(5) -
	(6) 17,000

Sulfur In (lb/hr)	Sulfur out (lb/hr)
(1) 3,500	(3) -
(2) -	(4) <10
	(5) 3,490
	(6) -

Inert Solids In (lb/hr)	Inert Solids out (lb/hr)
(1) 17,600	(3) 19,100[1]
(2) 2,600[2]	(4) -
	(5) -
	(6) -

Feedstocks:

	100% Petcoke		**75%Coal/25%Coke**	
STPD (As Received)	2820		3200	
STPD (dry)	2540		2850	
Component	wt% (dry)	lb/hr	wt% (dry)	lb/hr
C	88	186,000	78.23	184,000
H	4	8,500	4.9	11,000
N	2	4,200	1.68	4,000
S	5	10,600	1.5	3,500
O	0.6	1,300	6.2	14,000
Ash	0.4	800	7.49	17,600
Moisture	10		10.85	

Notes: 1) Only Ash contained in the Feedstock is shown in the solids balance. All other feedstock components are excluded.
2) Solid fluxant decomposes to solid ash (CaO) and gaseous CO_2. The solids out is less than the solids in due to this decomposition.

Source: HECA Project

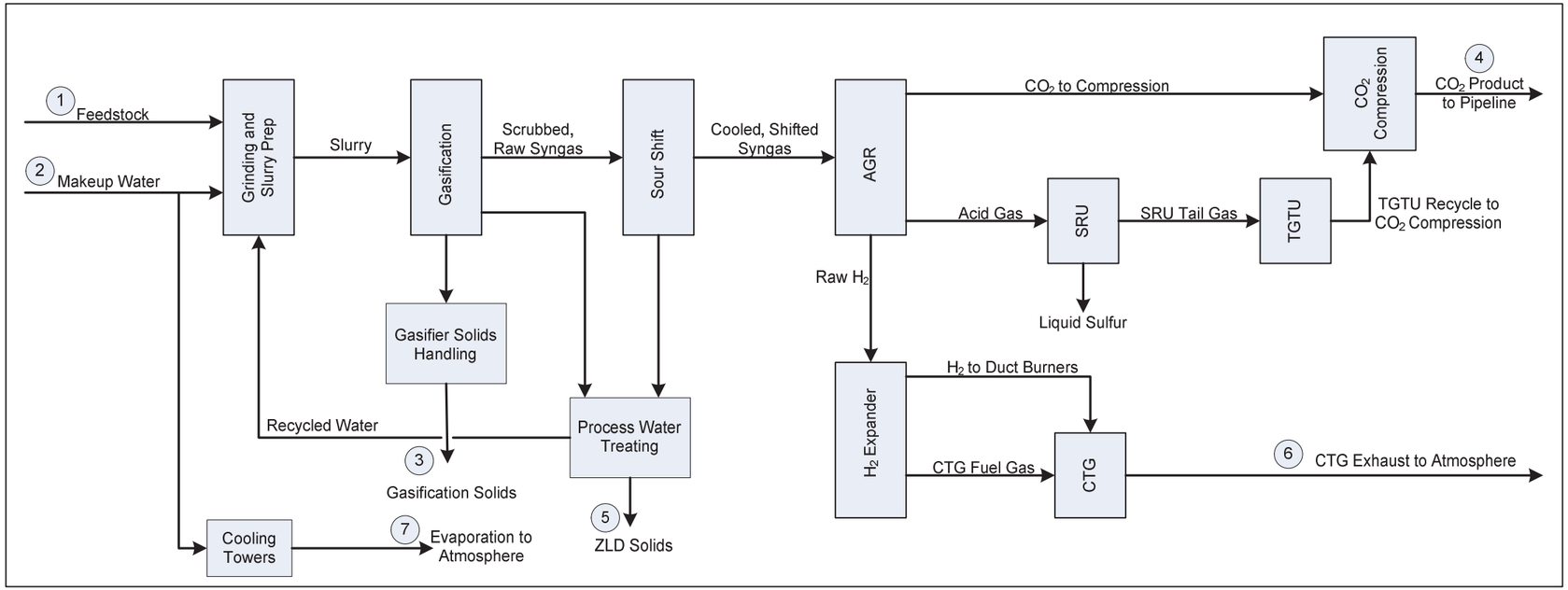

Water Balance:

100% Petroleum Coke Feedstock

Water In (lb/hr)	Water Out (lb/hr)
(1) 23,500	(3) 5,800
(2) 1,452,000	(4) -
	(5) 400
	(6) 350,000
	(7) 1,119,300

75%Coal/25% PetCoke Feedstock

Water In (lb/hr)	Water Out (lb/hr)
(1) 28,600	(3) 19,700
(2) 1,407,000	(4) -
	(5) 400
	(6) 354,000
	(7) 1,061,500

Source: HECA Project

BACKGROUND

The project description does not indicate that there is the potential for any fugitive VOC emissions. However, it is unclear if there are intermediate steps in the gasifier process that would include gaseous or liquid organic products that could result in fugitive VOC emissions.

DATA REQUEST

17. A. Please indicate if there are VOCs created as intermediate products in the gasification process and calculate the potential fugitive VOC emissions from piping components (flanges, valves, pumps, compressors, etc.).

B. Please provide an estimated count of those piping components.

RESPONSE

A. The Applicant is requesting an extension of 30 days to address this data request.

B. The Applicant is requesting an extension of 30 days to address this data request.

BACKGROUND

The AFC does not show any gasoline diesel storage for vehicle refueling. Staff would like to confirm that the applicant does not plan to store gasoline or diesel for vehicle refueling.

DATA REQUEST

31 b. Alternatively, or provide information for any proposed onsite gasoline storage and refueling facilities including throughput information and permitting requirements.

RESPONSE

b. In response to the California Energy Commission (CEC) data request, the Applicant has reevaluated the need for such a facility. The Applicant reconfirms that the HECA Project design has not changed and does not include any onsite gasoline or diesel vehicle refueling facilities. Dedicated onsite vehicles unlicensed for highway use and the stationary fuel storage tanks on the emergency diesel fire pump engine and emergency diesel generator engines will likely be refueled via licensed service trucks coming to the site. Facility vehicles licensed for travel on public roads will either be refueled by the service trucks or drive to one of several nearby commercial filling stations or truck stops.

BACKGROUND

The AFC, page 5.1-70, indicates that the results of a cumulative impacts analysis will be provided under separate cover and that Appendix J provides a list of projects located within 6 miles of the site from the SJVAPCD. However, staff's review indicates that Appendix J contains a list of projects from Kern County and not stationary source projects from the SJVAPCD. Staff needs the applicant to obtain the project list from the SJVAPCD and complete the cumulative impacts analysis.

DATA REQUEST

32. Please provide a list from the SJVAPCD of large stationary source projects with permitted emissions, for projects with greater than 5 tons of permitted emissions of any single criteria pollutant, located within six miles of the project site that have been recently permitted, but did not start operation prior to 2009, or are in the process of being permitted.

RESPONSE

A public records request was submitted to the SJVAPCD requesting the list of sources meeting the criteria specified in this data request; a copy of that request is included as Attachment 32-1. SJVAPCD responded with a list of sources, a copy of which is included as Attachment 32-2. There are no sources on the list that meet all of the criteria for inclusion specified in this data request. Specifically, all sources on the list emit less than 5 tons per year of any single criteria pollutant. Therefore, there are no sources to be included in the cumulative impacts modeling requested in Data Request 33. For information purposes only, all the sources from the SJVAPCD list are located and identified on Figure 32-1.

FIGURE 32-1

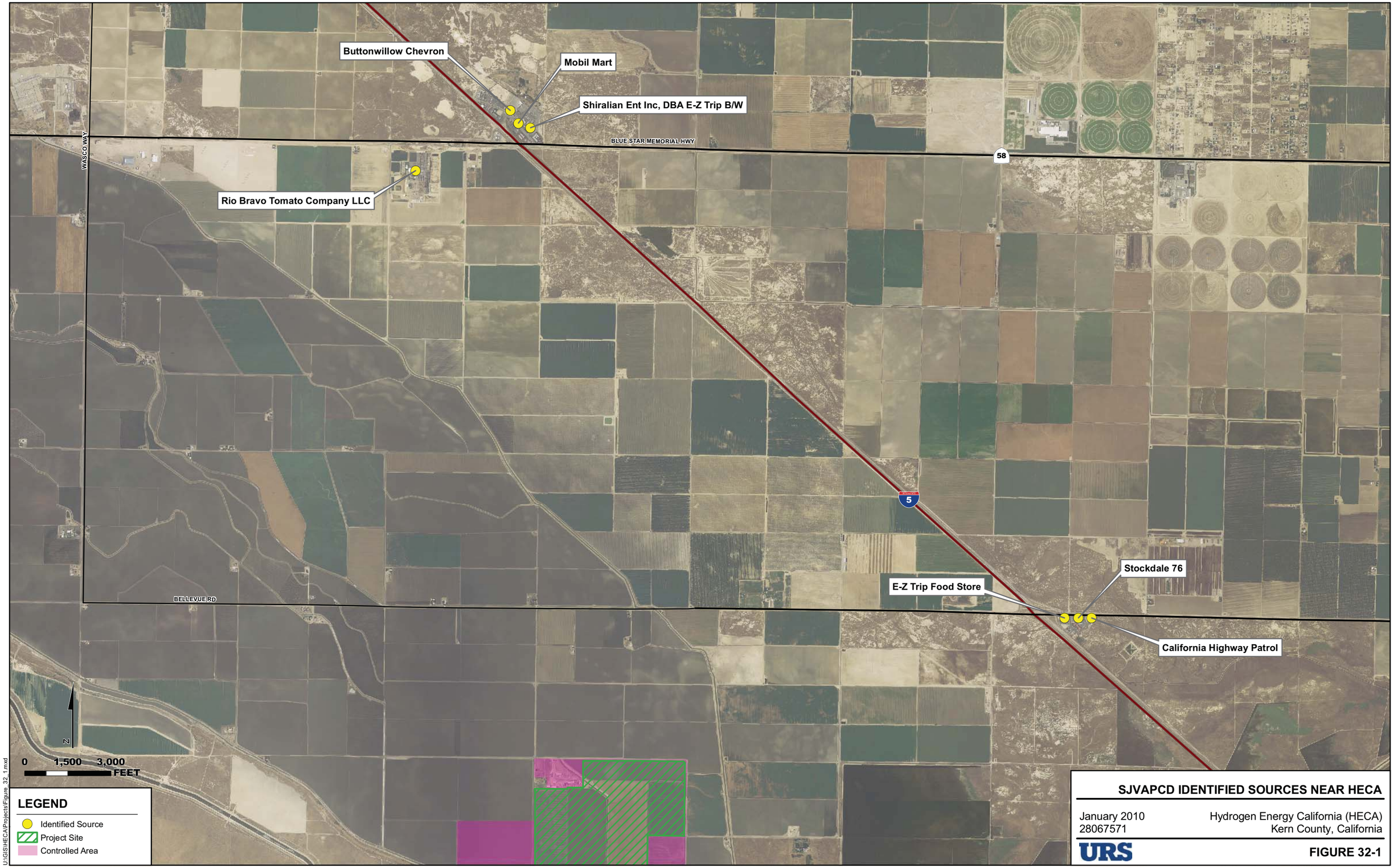

SJVAPCD IDENTIFIED SOURCES NEAR HECA

January 2010
28067571

Hydrogen Energy California (HECA)
Kern County, California

URS

FIGURE 32-1

ATTACHMENT 32-1
PUBLIC RECORDS REQUEST SUBMITTED TO
THE SAN JOAQUIN VALLEY AIR POLLUTION CONTROL DISTRICT

San Joaquin Valley
Air Pollution Control District
1990 E. Gettysburg Avenue, Fresno, CA 93726-0244
(559) 230-6000 www.Valleyair.org

Public Records Requests
Phone (559) 230-6000
Fax (559) 230-6061

Office Use Only
CONTROL NUMBER

PUBLIC RECORDS REQUEST FORM

ATTENTION REQUESTOR: To expedite your request for District records, please fill out this form completely. Identify specifically the type of records you are requesting. Please limit your request to one facility or one site address for each request form filed, and three requests items per form. Additional forms or pages can be used if requesting information for more than one facility or for records not identified on this form. Requests should reasonably describe identifiable records prepared, owned, used, or retained by the District. Staff is available to assist you in identifying those records in the District's possession. The District is not required by law to create a new record or list from an existing record. By submission of this form I hereby agree to reimburse the SJVUAPCD for the direct cost of duplicating the requested records in accordance with Gov. Code Sec. 6253(b).

REQUESTOR INFORMATION

NAME: Mark Strehlow DATE: Oct 26, 2009

COMPANY: URS Corporation, on behalf of Hydrogen Energy International LLC

MAILING ADDRESS: 1333 Broadway Suite 800

CITY: Oakland STATE: CA ZIP CODE: 94612

PHONE # 510 874 3055 FAX # E-MAIL: Mark_Strehlow@URSCorp.com

DOCUMENTS REQUESTED (*3 Items per form*)

- [ ] Permit Application(s)
- [ ] Permit(s) to Operate (PTO)
- [ ] Authorities to Construct (ATC)
- [ ] Engineering Evaluation(s)
- [ ] Emissions Inventory Statement(s)
- [ ] Health Risk Assessment(s)
- [ ] Site Inspection Report(s)
- [ ] Source Test Report(s)
- [ ] Air Monitoring Data
- [ ] Complaints
- [ ] Notice(s) of Violation (NOV)
- [ ] Notice(s) to Comply (NTC)
- [ ] All Records/General File Review
- [ ] Toxic Sources within 1/4 mi School Review
- [ ] Asbestos Notification(s)/Record(s)
- [ ] AB2588 "Hot Spots" Information
- [x] Other (*Describe below or on additional pages*):

Please provide a list of large stationary source projects with permitted emissions, for projects with greater than 5 tons of permitted emissions of any single criteria pollutant, located within 6 miles of HECA project site that have been recently permitted, but did not start operation prior to 2009, or are in the process of being permitted. In addition, please provide any emissions inventory applicable to the former Port Organics operation on the proposed HECA property regardless of any minimum criteria pollutant emission rate.

DATE OF DOCUMENTS REQUESTED: From: To:

REQUESTED FACILITY INFORMATION (*If Applicable*)

FACILITY NAME: Hydrogen Energy California (HECA) FACILITY I.D. NO. *(if known)*

FACILITY ADDRESS: Section 10 of Township 30 South, Range 24 East in Kern County

CITY: STATE: CA ZIP CODE:

METHOD OF DELIVERY (Check all that apply)

- [ ] Pick Up
- [ ] U.S. Mail
- [ ] FAX (Maximum 30 Pages)
- [ ] CD/DVD
- [x] Email (Maximum 5 MB)
- [x] Other
- [ ] Inspection of records only, no copies required (District will contact you to setup an appointment for inspection)

- [ ] I request that the SJVUAPCD contact me prior to completing the requested records if the cost exceeds $

ATTACHMENT 32-2
LIST OF EMISSIONS SOURCES PROVIDED BY
THE SAN JOAQUIN VALLEY AIR POLLUTION CONTROL DISTRICT

ATC Within 6 Miles

APPs Received Between 1/1/2009 and 12/31/2009

All Sources less than 5 Tons

Region S

Facility ID *1456*

Facility Name E-Z TRIP FOOD STORE

Facility Type GASOLINE DISPENSING

Distance To Location
5641.616

Degrees
26.37063

	Received	*Type*	*Status*	*Description*
VOC	1/14/2009	ATC	FINAL	installation of Healy EVR Phase II

Facility ID *2002*

Facility Name STOCKDALE 76

Facility Type GASOLINE DISPENSING

Distance To Location
5527.26

Degrees
26.96527

	Received	*Type*	*Status*	*Description*
VOC	10/5/2009	ATC	PR-INCO	installation of Phase II EVR and new dispensers

Facility ID *2187*

Facility Name SHIRALIAN ENT INC, DBA E-Z TRIP-B/W

Facility Type GASOLINE DISPENSING

Distance To Location
7835.253

Degrees
353.6736

	Received	*Type*	*Status*	*Description*
VOC	1/14/2009	ATC	FINAL	installation of Healy EVR Phase II

Facility ID *2346*

Facility Name CALIFORNIA HIGHWAY PATROL

Facility Type POLICE PROTECTION

Distance To Location

5773.069

Degrees

25.67612

	Received	Type	Status	Description
VOC	3/16/2009	ATC	FINAL	modify GDF/remove Phase II, per Rule 4622 ORVR exemption

Facility ID *2797*

Facility Name BUTTONWILLOW CHEVRON

Facility Type GASOLINE DISPENSING

Distance To Location

7835.387

Degrees

353.6724

	Received	Type	Status	Description
	8/5/2009	ATC	FINAL	Veeder Root Phase II Upgrade with ISD
VOC	3/17/2009	ATC	FINAL	installation of six new dispensers
	1/20/2009	ATC	FINAL	VST Phase II upgrade with Veeder Root vapor filter and without ISD

Facility ID *3043*

Facility Name MOBIL MART

Facility Type GASOLINE DISPENSING

Distance To Location

7818.377

Degrees

353.4922

	Received	Type	Status	Description
VOC	3/30/2009	ATC	FINAL	Vapor polisher upgrade

Facility ID *3550*

Facility Name RIO BRAVO TOMATO COMPANY LLC

Facility Type TOMATO PROCESSING

Distance To Location

7865.64

Degrees

344.3918

NOx
3.5 Tons/year

Received	*Type*	*Status*	*Description*
3/30/2009	PEER	FINAL	PEER: ONE (1) BOILER

DATA REQUEST

33. Please provide a cumulative impacts modeling analysis in consultation with Energy Commission staff based on the project list provided by SJVAPCD.

RESPONSE

A cumulative impacts modeling analysis is not included because no qualifying sources have been identified by SJVAPCD for inclusion in a cumulative impacts modeling analysis, as discussed in the response to Data Request 32.

BACKGROUND

The applicant has revised certain equipment and emission assumptions and staff's data requests are likely to create additional revisions to the operating emissions. Therefore, staff needs the applicant to remodel the operating emissions based on the finalized emission assumptions.

DATA REQUEST

36. Please revise the operations emission modeling, as appropriate, to include all of the revised onsite operating emission estimates.

RESPONSE

No revised operational emissions of criteria pollutants have resulted from the response to other data requests, with the exception of the change to the emissions of carbon monoxide (CO) and particulate matter less than 10 microns in diameter (PM_{10}) from the two infrequently used (not to exceed 50 hours per year each) emergency diesel generator engines described in the response to Data Request 30. The changes in emissions from the two emergency diesel engines are very small compared to the total emissions from the Project and are therefore expected to have very small (if even discernable) changes to the modeled impacts to air quality. Additionally, the originally modeled results for CO and PM_{10} emissions from the entire Project were well below and demonstrated a large margin of compliance with all Significant Impact Levels for both of these pollutants. Therefore, revised modeling of these two pollutants is not warranted.

Technical Area: Cultural Resources
Authors: Amanda Blosser, Beverly E. Bastian, and Michael McGuirt

Note: Any information that identifies the location of archaeological sites needs to be submitted under confidential cover.

BACKGROUND

HECA anticipates a variety of ground-disturbing activities that have the potential to impact previously known and newly identified archaeological sites within and adjacent to the project Rights-of-Way (ROWs). The project ROWs are defined by the project as:

- The project site and laydown areas, plus 50 feet around them;
- A transmission line corridor 175 feet wide; and
- In or within 50 feet of the centerline of all other proposed linear facilities, such as pipelines.

In addition to ground disturbance in these ROWs, the HECA project would construct both temporary and permanent access roads, use horizontal directional drilling (HDD) under extant linear facilities, and install tubular transmission line support structures. To identify all potential project impacts to cultural resources, staff needs additional location data on various project components, on the extent of cultural resources survey completed and remaining to be completed, and on all known and newly identified cultural resources.

DATA REQUEST

64. Please provide, under confidential cover, a series of maps (based on USGS 7.5-minute topographic maps enlarged to a scale of 1"=1,000 feet) that includes the project site and all the proposed alternative routes of linear facilities. In addition to the project components, please depict the following:

F. The proposed installation locations of transmission line tubular support structures;

RESPONSE

F. Figure 64-1(f) has been provided under confidential cover, at the requested scale, on U.S. Geological Survey maps. The maps include modified transmission routes 1a and 1b; identified cultural resources; areas that have not been surveyed that are within the CEC's defined archaeological survey area for linear facilities; and the installation locations of the transmission tubular support structures.

Technical Area: Public Health
Author: Dr. Alvin Greenberg

BACKGROUND

The AFC did not provide diesel particulate matter (DPM) emission factors for equipment and vehicles that will be used during construction activities nor was a health risk assessment prepared for diesel emissions from construction activities. Table 5.1-10 of the AFC provides modeling results for combustion sources during construction activities for criteria pollutants, including PM_{10} and $PM_{2.5}$, but not DPM. While staff understands that project construction emissions are short-term and may indeed pose an insignificant risk to public health as the AFC states, staff needs to verify this by reviewing the DPM emission factors and health risk assessment for construction activities.

DATA REQUEST

85. Please provide DPM emission factors from construction activities, the AERMOD air dispersion results (Chi/Q in ug/m^3 per g/sec) at the PMI, MEIR and MEIW (as defined in data requests 86, 87, and 88 below), and a health risk assessment for diesel construction equipment emissions.

RESPONSE

The Applicant is requesting an extension of 30 days to address this data request.

BACKGROUND

Public health impacts are modeled in the Health Risk Assessment at grid receptors located outside of both the Project Site and the Controlled Area. Impacts should also be determined for the Point of Maximum Impact (PMI) regardless of whether it occurs inside or outside of the Project Site and Controlled Area. Impacts at the location of the Maximally Exposed Individual Worker (MEIW) should likewise be determined.

DATA REQUEST

86. Please provide the location (in UTM coordinates), the AERMOD air dispersion results (Chi/Q in ug/m^3 per g/sec) at that location, and the estimated cancer risk, chronic hazard index and acute hazard index at the Point of Maximum Impact within the Project Site area, within the Controlled Area, and outside of both areas.

RESPONSE

The Applicant is requesting an extension of 30 days to address this data request.

DATA REQUEST

87. Please provide the location (in UTM coordinates), the AERMOD air dispersion results (Chi/Q in ug/m3 per g/sec) at that location, and the estimated cancer risk, chronic hazard index and acute hazard index at the MEIW within the Project Site area, within the Controlled Area, and outside of both areas.

RESPONSE

The Applicant is requesting an extension of 30 days to address this data request.

BACKGROUND

Staff identified two potential nearest Maximally Exposed Individual Residents (MEIRs). One is located next to the facility to the northwest and is evaluated in the AFC. The applicant is attempting to purchase this property. The other nearest residence is located east of the Project Site, at the intersection of Station Road and Tupman Road. The location of this residence should also be evaluated in the HRA for public health impacts.

DATA REQUEST

88. Please provide the location (in UTM coordinates), the AERMOD air dispersion results (Chi/Q in ug/m^3 per g/sec) at that location, and the estimated cancer risk, chronic hazard index and acute hazard index at the nearest residence located at the intersection of Station Road and Tule Park Road.

RESPONSE

The Applicant is requesting an extension of 30 days to address this data request.

BACKGROUND

The AFC identifies all HECA Toxic Air Contaminant (TAC) emission sources on page 5.6-10 of the Revised AFC under the subheading "Stationary Sources." Staff is concerned that not all sources are contained in that list. Staff needs a list of all source, all TACs emitted from those sources, and all emissions factors in order to properly and fully asses the potential for impacts to workers and the off-site public.

Also, Tables 5.6-2 through 13 show that emissions factors of TACs emitted from the facility are derived from various sources including EPA AP-42 tables, the Ventura County APCD, CARB CATEF tables, and the project itself ("HECA Project"). Staff needs to know the basis for all decisions to use these sources of emissions factors and whether for an explanation of the project itself can serve as a source of information.

DATA REQUEST

89. Please provide an updated list of all sources of TACs in tabular format listing the source, the identity of the TAC, and the emission factor. Please include all fugitive emissions of TACs from valves and flanges (especially hydrogen sulfide) and from all mobile sources (such as DPM from the trucks that would deliver petcoke and coal feedstock to the facility). Please use the maximum number of truck deliveries expected to and from the facility. (Mobile sources can be modeled as an area source in the facility fenceline and when within 0.1 mile of the facility.)

RESPONSE

The Applicant is requesting an extension of 30 days to address this data request.

DATA REQUEST

90. Please provide a discussion to support the choice of emission factors and explain why emission factors from a similar facility were not used.

RESPONSE

Stationary Equipment Emission Factors

The Applicant is requesting an extension of 30 days to address this data request.

Technical Area: Visual Resources – Visible Plume
Author: William Walters

BACKGROUND

Staff needs additional information to review the applicant's visible plume modeling analysis for the combustion turbine generator/heat recovery steam generator (CTG/HRSG). Staff requires additional CTG/HRSG exhaust information to confirm the modeling inputs used in the applicant's analysis and complete this review.

DATA REQUEST

125. Please summarize for the gas turbine/HRSGs the exhaust conditions to complete or correct data in the table below.

Parameter	***CTG/HRSG Exhaust***					
Stack Height*	***65 meters (213 feet)***					
Stack Diameter*	***6.1 meters (20 feet)***					
Ambient Temperature*	***30°F***		***65°F***		***100°F***	
	Non-Duct Fired					
Fuel Type	***H_2-Rich***	***Nat Gas***	***H_2-Rich***	***Nat Gas***	***H_2-Rich***	***Nat Gas***
Full Load Exhaust Temperature (°F)						
Full Load Exhaust Flow Rate (1000 lbs/hr)						
Full Load Exhaust Moisture Content (wt %)						
	Duct Fired					
Fuel Type	***H_2-Rich***	***Nat Gas***	***H_2-Rich***	***Nat Gas***	***H_2-Rich***	***Nat Gas***
Full Load Exhaust Temperature (°F)						
Full Load Exhaust Flow Rate (1000 lbs/hr)						
Full Load Exhaust Moisture Content (wt %)						

**** Stack height and diameter are from Appendix D of the AFC. Limited exhaust data is available for Appendix D but does not provide the ambient conditions assumed.***

Different cold weather, average annual, and hot weather temperature conditions can be provided as available.

RESPONSE

The requested data are presented in Table 125-1.

Table 125-1
Summary of CTG/HRSG Exhaust Conditions

Parameter	CTG/HRSG Exhaust							
Stack Height	65 meters (213 feet)							
Stack Diameter	6.1 meters (20 feet)							
Ambient Temperature	20°F		39°F		65°F		115°F	
	Non-Duct Fired							
Fuel Type	**H_2-Rich**	**Nat Gas**	**H_2-Rich**	**Nat Gas**	**H_2-Rich**	**Nat Gas**	**H_2-Rich**	**Nat Gas**
Full Load Exhaust Temperature (°F)	194	181	199	180	200	179	203	180
Full Load Exhaust Flow Rate (kpph)	4,082	3,962	4,086	3,845	4,102	3,706	4,015	3,524
Full Load Exhaust Moisture Content (wt%)	7.9	8.5	8.0	8.7	8.4	9.0	8.9	9.5
	Duct Fired							
Fuel Type	**H_2-Rich**	**Nat Gas**	**H_2-Rich**	**Nat Gas**	**H_2-Rich**	**Nat Gas**	**H_2-Rich**	**Nat Gas**
Full Load Exhaust Temperature (°F)	193	181	198	180	200	180	203	180
Full Load Exhaust Flow Rate (kpph)	4,095	3,986	4,099	3,869	4,115	3,730	4,032	3,548
Full Load Exhaust Moisture Content (wt%)	8.8	9.7	8.9	9.9	9.3	10.3	10.2	10.9

Notes:

The 20°F ambient temperature is an extreme minimum, while 39°F ambient is more representative of minimum monthly average winter conditions.

CTG = combustion turbine generator
°F = degrees Fahrenheit
H_2 = hydrogen
HRSG = heat recovery steam generator
kpph = kilopascals per hour
wt% = percent weight

BACKGROUND

Staff plans to perform a plume modeling analysis for the cooling tower and review the applicant's visible plume modeling analysis. Staff requires additional cooling tower operating information to complete this analysis.

DATA REQUEST

126. Please summarize for the main power block/gas cooling tower the conditions that affect vapor plume formation including cooling tower heat rejection, exhaust temperature, and exhaust mass flow rate. Please provide values to complete the table, and additional data as necessary for staff to be able to determine how the heat rejection load varies with ambient conditions and also determine at what ambient conditions cooling tower cells may be shut down.

Parameter	***Main Power Block/Gas Cooling Tower Exhausts***					
Number of Cells	***17 cells (1 by 17)***					
Cell Height*	***16.76 meters (55 feet)***					
Cell Diameter*	***9.14 meters (30 feet)***					
Tower Housing Length*	***259.20 meters (850 feet)***					
Tower Housing Width*	***18.29 meters (60 feet)***					
Ambient Temperature*	***30°F***		***65°F***		***100°F***	
Ambient Relative Humidity	***90%***		***40%***		***15%***	
Duct Firing	***Yes***	***No***	***Yes***	***No***	***Yes***	***No***
Number of Cells in Operation						
Heat Rejection (MW/hr)						
Exhaust Temperature (°F)						
Exhaust Flow Rate (lb/hr)						

****Cell height and diameter and tower length and width are from air quality modeling files, where the tower height is somewhat different than the value given in the SACTI visible plume modeling files.***

RESPONSE

The power block and gasification block cooling towers are separate systems that operate independently and have therefore been handled separately. Power block cooling tower heat rejection and exhaust air flow totals are provided in Table 126-1, along with the exhaust air temperature. The exhaust air leaves the cooling tower at essentially 100 percent relative humidity. Cooling tower fans are shut off at lower ambient temperatures to control the minimum cooling water supply temperature and the steam turbine exhaust pressure. Data have been provided across the ambient temperature range. Note that 20 degree Fahrenheit (°F) ambient temperature is an extreme minimum, while 39°F ambient is more representative of the minimum monthly average winter conditions. Therefore, the presence of visible plumes is expected to be less frequent than the analysis suggests.

The gasification block cooling tower exhaust air flows and temperatures and heat rejection loads are included in the Table 126-2. These conditions were calculated for a constant heat rejection across the ambient temperature range, which closely approximates the expected operating profile.

The cooling tower design specifications will incorporate a range of key operating parameters, including ambient conditions, heat rejection loads, prevailing wind direction, noise emission requirements, and drift limits. The supplier will apply design margins as appropriate to ensure cooling tower performance guarantees are met.

Table 126-1
Power Block Cooling Tower Heat Rejection and Exhaust Air Flow Totals

Parameter	**Power Block Cooling Tower Exhausts**							
Number of Cells	13 cells (1 by 13)							
Cell Height	16.76 meters (55 feet)							
Cell Diameter	9.14 meters (30 feet)							
Tower Housing Length	198.21 meters (650 feet)							
Tower Housing Width	18.29 meters (60 feet)							
Ambient Dry Bulb Temperature	20°F		39°F		65°F		115°F	
Ambient Wet Bulb Temperature	19°F		36.8°F		55.5°F		74.8°F	
Ambient Relative Humidity	85%		82%		55%		15%	
Fuel Type	**H_2-Rich Fuel Gas**							
HRSG Duct Firing	**Yes**	**No**	**Yes**	**No**	**Yes**	**No**	**Yes**	**No**
Number of Cells in Operation	8	7	11	9	13	13	13	13
Heat Rejection (MWth)	292.2	248.5	294.6	248.7	297.5	250.5	307.7	248.8
Exhaust Air Dry Bulb Temperature (°F)	69.5	67.3	70.3	70.3	78.1	75.1	91.8	88.6
Exhaust Air Wet Bulb Temperature (°F)	69.5	67.3	70.3	70.3	78.1	75.1	91.8	88.6
Exhaust Air Flow Rate (MMlb/hr)	38.2	34.6	50.2	42.5	58.0	58.1	55.9	56.3
Fuel Type	**Natural Gas**							
HRSG Duct Firing	**Yes**	**No**	**Yes**	**No**	**Yes**	**No**	**Yes**	**No**
Number of Cells in Operation	6	3	8	4	13	8	13	13
Heat Rejection (MWth)	231.9	152.5	231.3	151.3	231.0	150.6	232.9	152.2
Exhaust Air Dry Bulb Temperature (°F)	69.2	71.6	70.9	73.5	73.7	73.2	88.0	83.6
Exhaust Air Wet Bulb Temperature (°F)	69.2	71.6	70.9	73.5	73.7	73.2	88.0	83.6
Exhaust Air Flow Rate (MMlb/hr)	30.4	18.6	38.5	22.7	58.5	39.4	56.3	56.8

Notes:
°F = degrees Fahrenheit
H_2 = hydrogen
HRSG = heat recovery steam generator
MMlb/hr = million pounds per hour
MWth = megawatt, thermal

Table 126-2
Gasification Block Cooling Tower Exhaust Air Flows and Temperatures and Heat Rejection Loads

Parameter	Gasification Block Cooling Tower Exhausts			
Number of Cells	4 cells (1 by 4)			
Cell Height	16.76 meters (55 feet)			
Cell Diameter	9.14 meters (30 feet)			
Tower Housing Length	60.99 meters (200 feet)			
Tower Housing Width	18.29 meters (60 feet)			
Ambient Dry Bulb Temperature	20°F	39°F	65°F	115°F
Ambient Wet Bulb Temperature	19°F	36.8°F	55.5°F	74.8°F
Ambient Relative Humidity	85%	82%	55%	15%
Number of Cells in Operation	4	4	4	4
Heat Rejection (MWth) (1)	88.9	88.9	88.9	88.9
Exhaust Air Dry Bulb Temp (°F)	60.0	70.1	81.0	93.5
Exhaust Air Wet Bulb Temp (°F)	60.0	70.1	81.0	93.5
Exhaust Air Flow Rate (MMlb/hr)	15.6	15.3	14.9	14.4

Notes:
°F = degrees Fahrenheit
MMlb/hr = million pounds per hour
MWth = megawatt, thermal

DATA REQUEST

127. Additional combinations of temperature and relative humidity, if provided by the applicant, will be used to more accurately represent the cooling tower exhaust conditions. Please include appropriate design safety margins for the heat rejection, exhaust flow rate and exhaust temperature in consideration that the air flow per heat rejection ratio is often used as Condition of Certification confirmation of design limit.

RESPONSE

Please see the response to Data Request 126.

DATA REQUEST

128. Please summarize for the main power block/gas cooling tower the conditions that affect vapor plume formation including cooling tower heat rejection, exhaust temperature, and exhaust mass flow rate. Please provide values to complete the table, and additional data as necessary for staff to be able to determine how the heat rejection load varies with ambient conditions and also determine at what ambient conditions cooling tower cells may be shut down.

Parameter	***ASU Cooling Tower Exhausts***		
Number of Cells	***4 cells (1 by 4)***		
Cell Height*	***16.76 meters (55 feet)***		
Cell Diameter*	***9.14 meters (30 feet)***		
Tower Housing Length*	***60.70 meters (199 feet)***		
Tower Housing Width*	***18.29 meters (60 feet)***		
Ambient Temperature*	***30°F***	***65°F***	***100°F***
Ambient Relative Humidity	***90%***	***40%***	***15%***
Number of Cells in Operation			
Heat Rejection (MW/hr)			
Exhaust Temperature (°F)			
Exhaust Flow Rate (lb/hr)			

****Cell height and diameter and tower length and width are from air quality modeling files, where the tower height is somewhat different than the value given in the SACTI visible plume modeling files.***

RESPONSE

The air separation unit (ASU) cooling tower exhaust air flows and temperatures and heat rejection loads are included in Table 128-1. These conditions were calculated for a constant heat rejection across the ambient temperature range, which approximates constant oxygen production. Note that 20°F ambient temperature is an extreme minimum, while 39°F ambient temperature is more representative of the average minimum monthly winter conditions. Therefore, the presence of visible plumes is expected to be less frequent than the analysis suggests.

The cooling tower design specifications will incorporate a range of key operating parameters, including ambient conditions, heat rejection loads, prevailing wind direction, noise emission requirements, drift limits, etc. The supplier will apply design margins as appropriate to ensure cooling tower performance guarantees are met.

Table 128-1
Air Separation Unit Cooling Tower Exhaust Air Flows and Temperatures and Heat Rejection Loads

Parameter	Air Separation Unit Cooling Tower Exhausts			
Number of Cells	4 cells (1 by 4)			
Cell Height	16.76 meters (55 feet)			
Cell Diameter	9.14 meters (30 feet)			
Tower Housing Length	60.70 meters (199 feet)			
Tower Housing Width	18.29 meters (60 feet)			
Ambient Dry Bulb Temperature	20°F	39°F	65°F	115°F
Ambient Wet Bulb Temperature	19°F	36.8°F	55.5°F	74.8°F
Ambient Relative Humidity	85%	82%	55%	15%
Number of Cells in Operation	4	4	4	4
Heat Rejection (MWth)	93.6	93.6	93.6	93.6
Exhaust Air Dry Bulb Temp (°F)	62.0	71.7	82.3	94.5
Exhaust Air Wet Bulb Temp (°F)	62.0	71.7	82.3	94.5
Exhaust Air Flow Rate (MMlb/hr)	15.4	15.1	14.7	14.2

Notes:
°F = degrees Fahrenheit
MMlb/hr = million pounds per hour
MWth = megawatt, thermal

DATA REQUEST

129. Additional combinations of temperature and relative humidity, if provided by the applicant, will be used to more accurately represent the cooling tower exhaust conditions. Please include appropriate design safety margins for the heat rejection, exhaust flow rate and exhaust temperature in consideration that the air flow per heat rejection ratio is often used as Condition of Certification confirmation of design limit.

RESPONSE

Please see the response to Data Request 128.

DATA REQUEST

130. Staff is concerned that the very high air flow rates per heat rejection values provided in the applicant's SACTI modeling files will be difficult to meet if they are required as a design condition. Please review the air flow rate and heat rejection data and confirm that following values used in the SACTI modeling are correct.

A. Main Power Block/Gas Cooling Tower – 27.8 kg/s air flow per MWh of cooling
B. ASU Cooling Tower – 30.9 kg/s air flow per MWh of cooling.

RESPONSE

The ASU cooling tower exhaust air flows and temperatures and heat rejection loads are included in Table 130-1. These conditions were calculated for a constant heat rejection across the ambient temperature range, which approximates constant oxygen production. Note that 20°F ambient temperature is an extreme minimum, while 39°F ambient temperature is more representative of the average minimum monthly winter conditions. Therefore, the presence of visible plumes is expected to be less frequent than the analysis suggests.

The cooling tower design specifications will incorporate a range of key operating parameters, including ambient conditions, heat rejection loads, prevailing wind direction, noise emission requirements, drift limits, etc. The supplier will apply design margins as appropriate to ensure cooling tower performance guarantees are met.

Table 130-1
Air Separation Unit Cooling Tower Exhaust Air Flows and Temperatures and Heat Rejection Loads

Parameter	Air Separation Unit Cooling Tower Exhausts			
Number of Cells	4 cells (1 by 4)			
Cell Height	16.76 meters (55 feet)			
Cell Diameter	9.14 meters (30 feet)			
Tower Housing Length	60.70 meters (199 feet)			
Tower Housing Width	18.29 meters (60 feet)			
Ambient Dry Bulb Temperature	20°F	39°F	65°F	115°F
Ambient Wet Bulb Temperature	19°F	36.8°F	55.5°F	74.8°F
Ambient Relative Humidity	85%	82%	55%	15%
Number of Cells in Operation	4	4	4	4
Heat Rejection (MWth)	93.6	93.6	93.6	93.6
Exhaust Air Dry Bulb Temp (°F)	62.0	71.7	82.3	94.5
Exhaust Air Wet Bulb Temp (°F)	62.0	71.7	82.3	94.5
Exhaust Air Flow Rate (MMlb/hr)	15.4	15.1	14.7	14.2

Notes:
°F = degrees Fahrenheit
MMlb/hr = million pounds per hour
MWth = megawatt, thermal

A. For the Power Block & Gasification Block Cooling Towers, the following tables provide the exhaust air flow per heat rejection rate.

Table 130-2
Power Block Cooling Tower Exhaust Air Flows and Temperatures and Heat Rejection Loads

Parameter	**Power Block Cooling Tower Exhausts**							
Number of Cells	13 cells (1 by 13)							
Ambient Dry Bulb Temperature	20°F		39°F		65°F		115°F	
Ambient Wet Bulb Temperature	19°F		36.8°F		55.5°F		74.8°F	
Ambient Relative Humidity	85%		82%		55%		15%	
Fuel Type	**H_2-Rich Fuel Gas**							
HRSG Duct Firing	**Yes**	**No**	**Yes**	**No**	**Yes**	**No**	**Yes**	**No**
Air Flow/Heat Rejection (kg/s per MWth)	16.5	17.5	21.5	21.5	24.6	29.2	22.9	28.5
Heat Rejection (MWth)	292.2	248.5	294.6	248.7	297.5	250.5	307.7	248.8
Exhaust Air Flow Rate (MMlb/hr)	38.2	34.6	50.2	42.5	58.0	58.1	55.9	56.3
Fuel Type	**Natural Gas**							
HRSG Duct Firing	**Yes**	**No**	**Yes**	**No**	**Yes**	**No**	**Yes**	**No**
Air Flow/Heat Rejection (kg/s per MWth)	16.5	15.4	21.0	18.9	31.9	33.0	30.5	47.0
Heat Rejection (MWth)	231.9	152.5	231.3	151.3	231.0	150.6	232.9	152.2
Exhaust Air Flow Rate (MMlb/hr)	30.4	18.6	38.5	22.7	58.5	39.4	56.3	56.8

Notes:
°F = degrees Fahrenheit
kg/s = kilograms per second
MMlb/hr = million pounds per hour
MWth = megawatt, thermal

Table 130-3
Gasification Block Cooling Tower Exhaust Air Flows and Temperatures and Heat Rejection Loads

Parameter	Gasification Block Cooling Tower Exhausts			
Number of Cells	4 cells (1 by 4)			
Ambient Dry Bulb Temperature	20°F	39°F	65°F	115°F
Ambient Wet Bulb Temperature	19°F	36.8°F	55.5°F	74.8°F
Ambient Relative Humidity	85%	82%	55%	15%
Number of Cells in Operation	4	4	4	4
Air Flow/Heat Rejection (kg/s per MWth)	22.1	21.7	21.1	20.4
Heat Rejection (MWth)	88.9	88.9	88.9	88.9
Exhaust Air Flow Rate (MMlb/hr)	15.6	15.3	14.9	14.4

Notes:
°F = degrees Fahrenheit
kg/s = kilograms per second
MMlb/hr = million pounds per hour
MWth = megawatt, thermal

B. For the ASU Cooling Tower, the following table provides the exhaust air flow per heat rejection rate.

Table 130-4
Air Separation Unit Cooling Tower Exhaust Air Flows and Temperatures and Heat Rejection Loads

Parameter	Air Separation Unit Cooling Tower Exhausts			
Number of Cells	4 cells (1 by 4)			
Ambient Dry Bulb Temperature	20°F	39°F	65°F	115°F
Ambient Wet Bulb Temperature	19°F	36.8°F	55.5°F	74.8°F
Ambient Relative Humidity	85%	82%	55%	15%
Number of Cells in Operation	4	4	4	4
Air Flow/Heat Rejection (kg/s per MWth)	20.7	20.3	19.8	19.1
Heat Rejection (MWth)	93.6	93.6	93.6	93.6
Exhaust Air Flow Rate (MMlb/hr)	15.4	15.1	14.7	14.2

Notes:
°F = degrees Fahrenheit
kg/s = kilograms per second
MMlb/hr = million pounds per hour
MWth = megawatt, thermal

DATA REQUEST

131. Please provide the cooling tower manufacturer and model number information and a fogging frequency curve from the cooling tower vendor for the two cooling towers, if available.

RESPONSE

The following table contains a representative cooling tower manufacturer and model number for each of the cooling towers in the HECA project. Final cooling towers selected will be the same or similar. Fogging frequency curves are not available at this time.

Table 131-1
Representative Cooling Tower Manufacturer and Model Information

Cooling Tower Service	Manufacturer	Model Number
Power Block	SPX Cooling Technologies Inc.	F489-6.0-13
Gasification Block	SPX Cooling Technologies Inc.	F489-6.0-4
Air Separation Unit	SPX Cooling Technologies Inc.	F489-6.0-4

DATA REQUEST

132. Please identify if the cooling tower fan motors will be dual speed or have variable speed/flow controllers for either of the two cooling towers.

RESPONSE

The power block, gasification block, and ASU cooling towers will have single, fixed-speed fan motors. Fans will be turned off during periods of excess cooling capacity; there are no variable-speed controllers.

BEFORE THE ENERGY RESOURCES CONSERVATION AND DEVELOPMENT COMMISSION OF THE STATE OF CALIFORNIA
1516 NINTH STREET, SACRAMENTO, CA 95814
1-800-822-6228 – WWW.ENERGY.CA.GOV

APPLICATION FOR CERTIFICATION FOR THE *HYDROGEN ENERGY CALIFORNIA PROJECT*

Docket No. 08-AFC-8

PROOF OF SERVICE LIST (Rev. 9/3/09)

APPLICANT

Gregory D. Skannal
Tiffany Rau
Rick Harrison
Hydrogen Energy International LLC
One World Trade Center, Suite 1600
Long Beach, CA 90831
gregory.skannal@hydrogenenergy.com
tiffany.rau@hydrogenenergy.com
rick.harrison@hydrogenenergy.com

Asteghik Khajetoorians,
Senior BP Legal Attorney
BP America, Inc.
6 Centerpointe Drive, LPR 6-550
La Palma, CA 90623
Asteghik.Khajetoorians@bp.com

APPLICANT'S CONSULTANT

Dale Shileikis, Vice President
Energy Services Manager
Major Environmental Programs
URS Corporation
221 Main Street, Suite 600
San Francisco, CA 94105-1917
dale_shileikis@urscorp.com

COUNSEL FOR APPLICANT

Michael J. Carroll
Latham & Watkins, LLP
650 Town Center Drive, 20th Fl.
Costa Mesa, CA 92626-1925
michael.carroll@lw.com

INTERESTED AGENCIES

California ISO
e-recipient@caiso.com

INTERVENORS

***Tom Frantz**
Association of Irritated Residents
30100 Orange Street
Shafter, CA 93263
tfrantz@bak.rr.com

ENERGY COMMISSION

JAMES D. BOYD
Vice Chair and Presiding Member
jboyd@energy.state.ca.us

JEFFREY D. BYRON
Commissioner and Associate Member
jbyron@energy.state.ca.us

Raoul Renaud
Hearing Officer
rrenaud@energy.state.ca.us

Rod Jones
Project Manager
rjones@energy.state.ca.us

Lisa De Carlo
Staff Counsel
ldecarlo@energy.state.ca.us

Public Adviser's Office
publicadviser@energy.state.ca.us

DECLARATION OF SERVICE

I, Dale Shileikis, declare that on January 8, 2010, I served and filed copies of the attached Responses to Data Requests Set One (Nos. 1,2, 11, 17, 31b, 32, 33, 36, 64f, 85 through 90, and 125 through 132, dated January, 2010. The original document, filed with the Docket Unit, is accompanied by a copy of the most recent Proof of Service list, located on the web page for this project at: **[www.energy.ca.gov/sitingcases/hydrogen_energy]**.

The documents have been sent to both the other parties in this proceeding (as shown on the Proof of Service list) and to the Commission's Docket Unit, in the following manner:

(*Check all that Apply*)

FOR SERVICE TO ALL OTHER PARTIES:

X sent electronically to all email addresses on the Proof of Service list

_____ by personal delivery or by depositing in the United States mail at _____ with first-class postage thereon fully prepaid and addressed as provided on the Proof of Service list above to those addresses **NOT** marked "email preferred."

AND

FOR FILING WITH THE ENERGY COMMISSION:

X sending an original paper copy and one electronic copy, mailed and emailed respectively, to the address below (***preferred method***);

OR

_____ depositing in the mail an original and 12 paper copies, as follows:

CALIFORNIA ENERGY COMMISSION
Attn: Docket No. 08-AFC-8
1516 Ninth Street, MS-4
Sacramento, CA 95814-5512

docket@energy.state.ca.us

I declare under penalty of perjury that the foregoing is true and correct.