OCCIDENTAL OF ELK HILLS INC

321-2G

Event: WELL MAINT - RIG
Event End: 11/6/2007 00:00
Sec. Reason: BODY BREAK
End Status: FINISHED - SUCCESS
Well Classification: DEVELOPMENT

Ground Level: 854.0ft
Datum: ORIGINAL KB @ 871.00ft (default)
API No.: 0402979858

Wellbore: ORIGINAL HOLE
PBMD: 7,025.0ft
Btm TMD: 7,820.0ft
Spud Date: 6/28/1987 00:00
BH Coord X: 6,151,749.74uss ft
BH Coord Y: 2,286,582.03uss ft

Casing Shoes (ft) | Schematic (12/1/2007) | Openings Top/Btm/Type/Status

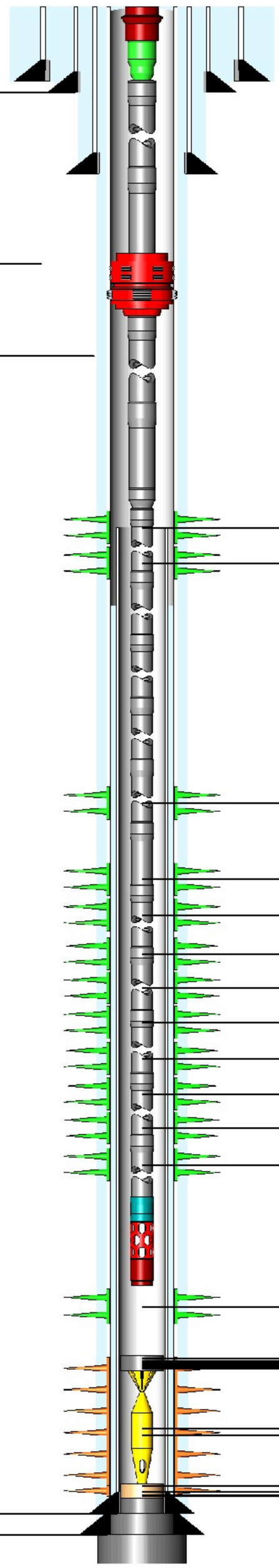

319.0
74.0
3,233.0
7,686.0
7,801.0

6,192.0ft, 6,212.0ft, PERFORATED, OPE
6,228.0ft, 6,253.0ft, PERFORATED, OPE
6,474.0ft, 6,560.0ft, PERFORATED, OPE
6,736.0ft, 6,742.0ft, PERFORATED, OPE
6,756.0ft, 6,766.0ft, PERFORATED, OPE
6,792.0ft, 6,798.0ft, PERFORATED, OPE
6,804.0ft, 6,808.0ft, PERFORATED, OPE
6,816.0ft, 6,821.0ft, PERFORATED, OPE
6,834.0ft, 6,838.0ft, PERFORATED, OPE
6,848.0ft, 6,851.0ft, PERFORATED, OPE
6,856.0ft, 6,868.0ft, PERFORATED, OPE
6,878.0ft, 6,915.0ft, PERFORATED, SQU
6,878.0ft, 6,915.0ft, PERFORATED, OPE
6,930.0ft, 6,980.0ft, PERFORATED, OPE
6,930.0ft, 6,980.0ft, REPERFORATED, S
7,056.0ft, 7,087.0ft, PERFORATED, SQU
7,107.0ft, 7,122.0ft, PERFORATED, SQU
7,122.0ft, 7,142.0ft, PERFORATED, SQU
7,160.0ft, 7,173.0ft, PERFORATED, SQU
7,183.0ft, 7,208.0ft, PERFORATED, SQU
7,225.0ft, 7,250.0ft, PERFORATED, SQU
7,250.0ft, 7,280.0ft, PERFORATED, SQU
7,300.0ft, 7,346.0ft, PERFORATED, SQU
7,310.0ft, 7,366.0ft, PERFORATED, SQU
7,346.0ft, 7,366.0ft, PERFORATED, SQU
7,442.0ft, 7,528.0ft, PERFORATED, SQU
7,465.0ft, 7,525.0ft, PERFORATED, SQU
7,550.0ft, 7,579.0ft, PERFORATED, SQU
7,570.0ft, 7,609.0ft, REPERFORATED, S
7,570.0ft, 7,609.0ft, PERFORATED, SQU
7,579.0ft, 7,609.0ft, PERFORATED, SQU

ROD STRING Report Date: 11/4/2007 00:00

Component	Top MD (ft)	Btm MD (ft)
POLROD	0.0	30.0
PNYROD	30.0	56.0
R-4PER	56.0	2,696.0
R-4PER	2,696.0	6,056.0
R-5PER	6,056.0	6,896.0
RSTBAR	6,896.0	6,900.0
INSPMP	6,900.0	6,924.0

TUBING STRING Report Date: 6/4/2007 00:00

Component	Top MD (ft)	Btm MD (ft)
TH-DBB	17.0	17.6
FATNIP	17.6	18.3
CAS	18.3	5,922.6
AC	5,922.6	5,924.9
CAS	5,924.9	6,175.8
XO	6,175.8	6,177.0
CAS	6,177.0	6,917.0
STNIP	6,917.0	6,918.0
PERFJT	6,918.0	6,922.0
STCOLL	6,922.0	6,922.5

PLUG BACK Report Date: 4/28/2003 00:00

Component	Top MD (ft)	Btm MD (ft)
CEMENT	7,025.0	7,309.0

PLUG BACK Report Date: 6/6/1996 00:00

Component	Top MD (ft)	Btm MD (ft)
JUNK	7,309.0	7,318.0

PLUG BACK Report Date: 6/5/1996 00:00

Component	Top MD (ft)	Btm MD (ft)
FILL	7,318.0	7,663.0

PLUG BACK Report Date: 8/19/1994 00:00

Component	Top MD (ft)	Btm MD (ft)
CEMENT	7,663.0	7,686.0

PLUG BACK Report Date: 8/11/1994 00:00

Component	Top MD (ft)	Btm MD (ft)
CEMENT	7,686.0	7,801.0

PLUG BACK Report Date: 7/27/1987 00:00

Component	Top MD (ft)	Btm MD (ft)
CEMENT	7,801.0	7,820.0

CONDUCTOR CASING Report Date: 6/28/1987 00:00

Item	OD (in)	Grade	Wt. (ppf)	TopMD (ft)	BtmMD (ft)
CASING JOINT(S)	20.000		94.00	17.0	57.0

SURFACE CASING Report Date: 7/5/1987 00:00

Item	OD (in)	Grade	Wt. (ppf)	TopMD (ft)	BtmMD (ft)
CASING JOINT(S)	13.375	H-40	48.00	17.0	319.0

INTERMEDIATE CASING Report Date: 7/11/1987 00:00

Item	OD (in)	Grade	Wt. (ppf)	TopMD (ft)	BtmMD (ft)
CASING JOINT(S)	9.625	K-55	40.00	17.0	3,216.0

PRODUCTION CASING Report Date: 7/27/1987 00:00

Item	OD (in)	Grade	Wt. (ppf)	TopMD (ft)	BtmMD (ft)
CASING JOINT(S)	7.000	N-80	26.00	17.0	89.0
CASING JOINT(S)	7.000	K-55	23.00	89.0	5,051.0
CASING JOINT(S)	7.000	K-55	26.00	5,051.0	6,954.2
FLAG JOINT	7.000	K-55	26.00	6,954.2	6,977.4
CASING JOINT(S)	7.000	K-55	26.00	6,977.4	7,106.0
CASING JOINT(S)	7.000	N-80	26.00	7,106.0	7,801.0

LINER Report Date: 8/11/1994 00:00

Item	OD (in)	Grade	Wt. (ppf)	TopMD (ft)	BtmMD (ft)
SEAL PROTECTOR	5.000			6,349.2	6,357.8
SEALBORE EXTENSION	5.000			6,357.8	6,362.3
CASING HANGER	5.000	N-80	18.00	6,362.3	6,371.4
CASING JOINT(S)	5.000	N-80	18.00	6,371.4	7,682.7
FLOAT COLLAR	5.500			7,682.7	7,684.7
GUIDE SHOE	5.562			7,684.7	7,686.0

Well: 321-2G S/T/R: 2G/31S/24E

CASING CEMENT DETAIL
- - -
Sfc Csg. Cmt Vol.: 425 cf
Hole Size: 17.5"
Top Job: No
Rtns to Sfc: 56 cf
TOC: Sfc
- - -

Interm Csg. Cmt Vol.: 1480 cf
Hole Size: 12.25"
Top Job: No
Rtns to Sfc: 45 cf
TOC: Sfc
- - -

Prod. Csg. Cmt Vol.: 1360 cf
Hole Size: 8.75"
Top Job: No
Rtns to Sfc:
TTOC: Sfc
- - -

Liner Cmt Vol.: 146 cf
Hole Size: 6.25"
Top Job: No
Rtns to Sfc: No
TTOC: TOL
- - -
Top of Formation:
UBA: 7034'
BLW: 7610'

Volume Behind Pipe:
1.3 Yield Assumed
Theoretical Calculations (TTOC)