OCCIDENTAL OF ELK HILLS INC

328-34S

Event: WELL MAINT - RIG
Event End: 7/24/2009 00:00
Sec. Reason: SPLIT

Ground Level: 973.0ft
Datum: ORIGINAL KB @ 987.00ft (default)
API No.: 0402954413

Wellbore: ORIGINAL HOLE
PBMD: 5,981.0ft
Btm TMD: 8,000.0ft
Spud Date: 12/1/1976 00:00
BH Coord X: 6,146,188.90uss ft
BH Coord Y: 2,287,119.40uss ft

Casing Shoes (ft) | Schematic (8/1/2009) | Openings Top/Btm/Type/Status

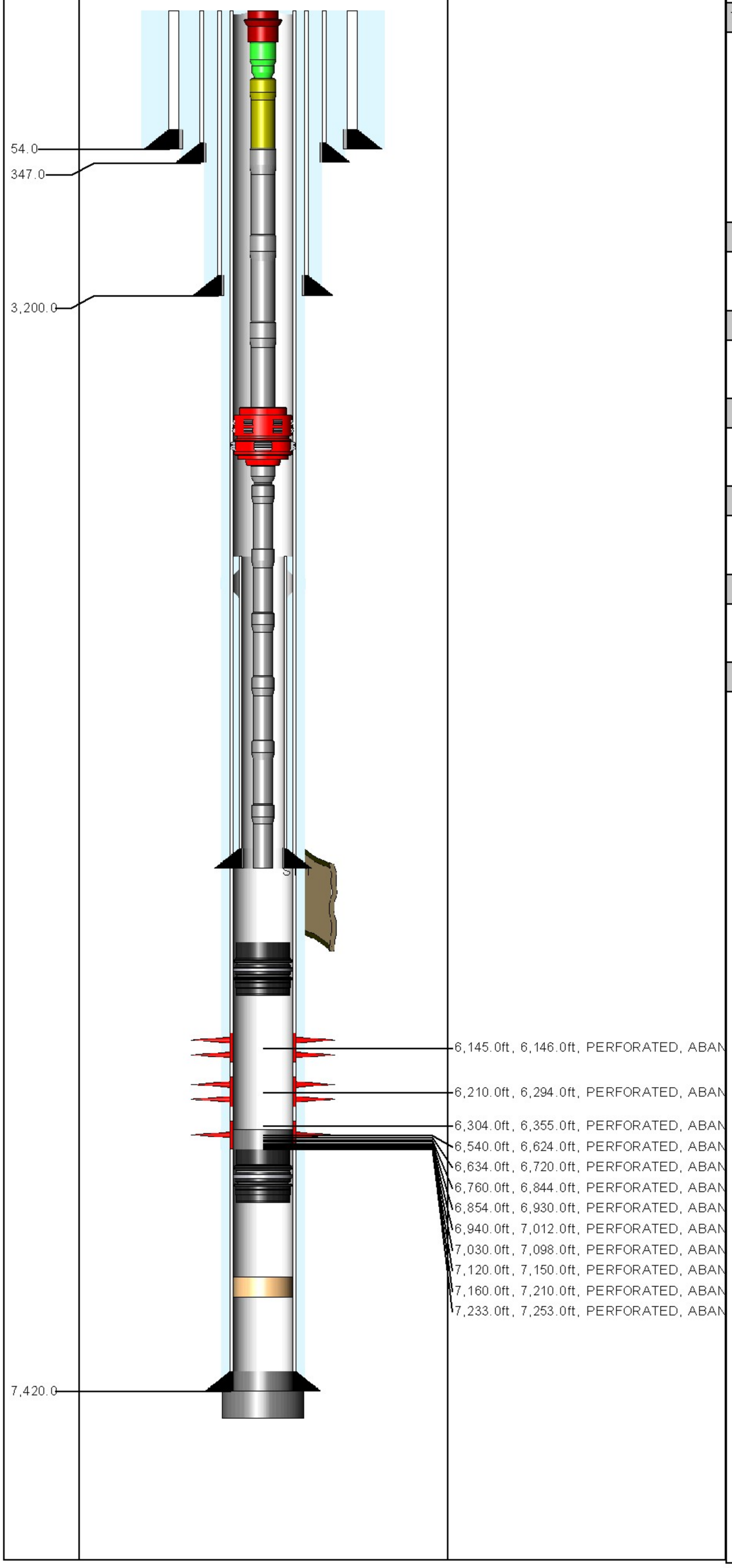

ROD STRING Report Date: 7/23/2009 00:00

Component	Top MD (ft)	Btm MD (ft)
POLRDL	0.0	36.0
R-4PER	36.0	2,766.0
R-4PER	2,766.0	5,496.0
R-5PER	5,496.0	5,886.0
R-6PER	5,886.0	6,696.0
RSTBAR	6,696.0	6,699.0
INSPMP	6,699.0	6,723.0

TUBING STRING Report Date: 7/22/2009 00:00

Component	Top MD (ft)	Btm MD (ft)
TH-DBB	14.0	15.0
FATNIP	15.0	15.6
PUPJNT	15.6	26.0
TBGJNT	26.0	5,612.4
AC	5,612.4	5,614.4
XO	5,614.4	5,615.5
TBGJNT	5,615.5	6,711.3
STNIP	6,711.3	6,712.4
TBGJNT	6,712.4	6,743.8
STCOLL	6,743.8	6,744.2

PLUG BACK Report Date: 8/2/2001 00:00

Component	Top MD (ft)	Btm MD (ft)
BP-DR	5,981.0	5,984.0

PLUG BACK Report Date: 7/31/2001 00:00

Component	Top MD (ft)	Btm MD (ft)
CEMENT	6,310.0	7,275.0

PLUG BACK Report Date: 9/22/1990 00:00

Component	Top MD (ft)	Btm MD (ft)
BP-DR	7,275.0	7,277.0

PLUG BACK Report Date: 9/19/1990 00:00

Component	Top MD (ft)	Btm MD (ft)
FILL	7,290.0	7,319.0

PLUG BACK Report Date: 4/19/1977 00:00

Component	Top MD (ft)	Btm MD (ft)
CEMENT	7,370.0	7,420.0

PLUG BACK Report Date: 4/18/1977 00:00

Component	Top MD (ft)	Btm MD (ft)
CEMENT	7,420.0	8,000.0

CONDUCTOR CASING Report Date: 12/1/1976 00:00

Item	OD (in)	Grade	Wt. (ppf)	TopMD (ft)	BtmMD (ft)
CASING JOINT(S)	20.000			14.0	54.0

SURFACE CASING Report Date: 3/24/1977 00:00

Item	OD (in)	Grade	Wt. (ppf)	TopMD (ft)	BtmMD (ft)
CASING JOINT(S)	13.375	H-40	48.00	14.0	347.0

INTERMEDIATE CASING Report Date: 3/29/1977 00:00

Item	OD (in)	Grade	Wt. (ppf)	TopMD (ft)	BtmMD (ft)
CASING JOINT(S)	9.625	K-55	40.00	14.0	3,200.0

PRODUCTION CASING Report Date: 4/18/1977 00:00

Item	OD (in)	Grade	Wt. (ppf)	TopMD (ft)	BtmMD (ft)
CASING JOINT(S)	7.000	K-55	26.00	14.0	83.1
CASING JOINT(S)	7.000	K-55	23.00	83.1	4,561.0
CASING JOINT(S)	7.000	K-55	26.00	4,561.0	6,484.2
FLAG JOINT	7.000	K-55	26.00	6,484.2	6,495.6
CASING JOINT(S)	7.000	K-55	26.00	6,495.6	7,371.8
FLOAT COLLAR	7.000	K-55	26.00	7,371.8	7,374.4
CASING JOINT(S)	7.000	K-55	26.00	7,374.4	7,417.4
FLOAT SHOE	7.000	K-55	26.00	7,417.4	7,420.0

LINER Report Date: 8/26/2001 00:00

Item	OD (in)	Grade	Wt. (ppf)	TopMD (ft)	BtmMD (ft)
TIE BACK RECEPTACLE	5.000			5,731.0	5,742.4
LINER HANGER	7.000			5,742.4	5,749.8
LINER HANGER LANDING COLLAR	7.000			5,749.8	5,751.5
LINER HANGER	7.000			5,751.5	5,758.1
CROSSOVER	7.000			5,758.1	5,760.6
CASING JOINT(S)	5.000	L-80	18.00	5,760.6	7,421.7
LANDING COLLAR	5.000			7,421.7	7,421.7
	5.000			7,421.7	7,421.7
CASING JOINT(S)	5.000	L-80	18.00	7,421.7	7,514.0
FLOAT SHOE	5.000			7,514.0	7,515.8

Well: 328-34S S/T/R: 34S/30S/24E

CASING CEMENT DETAIL
- - -
Sfc Csg. Cmt Vol.: 388 cf
Hole Size: 17.5"
Top Job: No
Rtns to Sfc: Trace
TOC: Sfc
- - -

Interm Csg. Cmt Vol.: 1753 cf
Hole Size: 12.25"
Top Job: No
Rtns to Sfc: 300 cf
TOC: Sfc
- - -

Prod. Csg. Cmt Vol.: 1900 cf
Hole Size: 8.75"
Top Job: No
Rtns to Sfc:
TTOC: Sfc

Liner Cmt Vol.:
Hole Size:
Top Job:
Rtns to Sfc:
TTOC:
- - -
Top of Formation:
UBA: 6834'
BLW: 7365'

Volume Behind Pipe:
1.3 Yield Assumed
Theoretical Calculations (TTOC)