Event: WELL MAINT - RIG
Event End: 10/9/2008 00:00
Sec. Reason: LOW PRODUCTION
End Status: FINISHED - SUCCESS
Well Classification: DEVELOPMENT

OCCIDENTAL OF ELK HILLS INC

337-35S

Ground Level: 795.0ft
Datum: ORIGINAL KB @ 809.00ft (default)
API No.: 0402958872

Wellbore: ORIGINAL HOLE
PBMD: 7,486.0ft
Btm TMD: 7,844.0ft
Spud Date: 2/5/1979 00:00
BH Coord X: 6,152,327.93uss ft
BH Coord Y: 2,287,351.57uss ft

Casing Shoes (ft)	Schematic (10/9/2008)	Openings Top/Btm/Type/Status

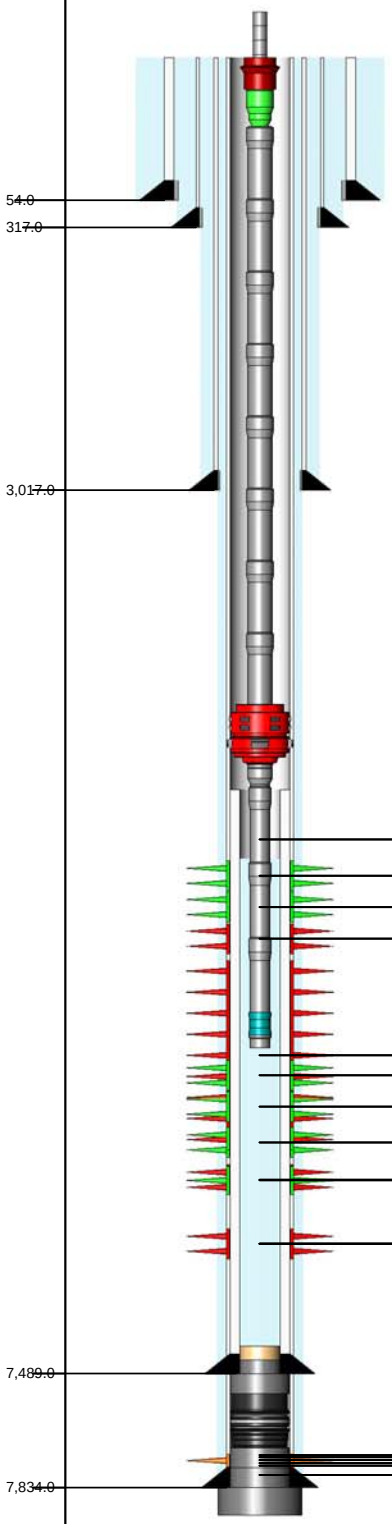

6,250.0ft, 6,251.0ft, WSO PERFS, SQUEEZE
6,720.0ft, 6,787.0ft, PERFORATED, OPEN
6,807.0ft, 6,822.0ft, PERFORATED, OPEN
6,845.0ft, 6,985.0ft, PERFORATED, ABANDO
7,010.0ft, 7,204.0ft, PERFORATED, ABANDO
7,134.0ft, 7,143.0ft, PERFORATED, OPEN
7,146.0ft, 7,157.0ft, PERFORATED, OPEN
7,170.0ft, 7,215.0ft, PERFORATED, OPEN
7,229.0ft, 7,354.0ft, PERFORATED, ABANDO
7,235.0ft, 7,354.0ft, PERFORATED, OPEN
7,385.0ft, 7,430.0ft, PERFORATED, ABANDO
7,385.0ft, 7,430.0ft, REPERFORATED, OPEN
7,595.0ft, 7,620.0ft, PERFORATED, SQUEEZ
7,630.0ft, 7,654.0ft, PERFORATED, SQUEEZ
7,665.0ft, 7,706.0ft, PERFORATED, SQUEEZ
7,725.0ft, 7,745.0ft, PERFORATED, SQUEEZ
7,755.0ft, 7,790.0ft, PERFORATED, SQUEEZ
7,815.0ft, 7,816.0ft, SQZ PERFS, SQUEEZED

ROD STRING Report Date: 10/8/2008 00:00

Component	Top MD (ft)	Btm MD (ft)
POLROD	0.0	36.0
ROD	36.0	1,926.0
ROD	1,926.0	3,816.0
ROD	3,816.0	7,026.0
RSTBAR	7,026.0	7,030.0
INSPMP	7,030.0	7,060.0

TUBING STRING Report Date: 10/7/2008 00:00

Component	Top MD (ft)	Btm MD (ft)
TH-DBB	14.0	14.6
FATNIP	14.6	15.3
TBGJNT	15.3	6,078.3
AC	6,078.3	6,080.6
TBGJNT	6,080.6	6,174.9
XO	6,174.9	6,176.0
TBGJNT	6,176.0	7,071.3
STNIP	7,071.3	7,072.4
TBGJNT	7,072.4	7,103.3

PLUG BACK Report Date: 10/10/2002 00:00

Component	Top MD (ft)	Btm MD (ft)
FILL	7,465.0	7,486.0

PLUG BACK Report Date: 7/23/1993 00:00

Component	Top MD (ft)	Btm MD (ft)
CEMENT	7,486.0	7,489.0

PLUG BACK Report Date: 7/23/1993 00:00

Component	Top MD (ft)	Btm MD (ft)
CEMENT	7,489.0	7,490.0

PLUG BACK Report Date: 9/7/1979 00:00

Component	Top MD (ft)	Btm MD (ft)
CR-PRM	7,490.0	7,492.0
CEMENT	7,492.0	7,805.0

PLUG BACK Report Date: 3/17/1979 00:00

Component	Top MD (ft)	Btm MD (ft)
CEMENT	7,805.0	7,834.0

PLUG BACK Report Date: 3/15/1979 00:00

Component	Top MD (ft)	Btm MD (ft)
CEMENT	7,834.0	7,844.0

CONDUCTOR CASING Report Date: 2/5/1979 00:00

Item	OD (in)	Grade	Wt. (ppf)	TopMD (ft)	BtmMD (ft)
CASING JOINT(S)	20.000			14.0	54.0

SURFACE CASING Report Date: 2/15/1979 00:00

Item	OD (in)	Grade	Wt. (ppf)	TopMD (ft)	BtmMD (ft)
CASING JOINT(S)	13.375	H-40	48.00	14.0	317.0

INTERMEDIATE CASING Report Date: 2/19/1979 00:00

Item	OD (in)	Grade	Wt. (ppf)	TopMD (ft)	BtmMD (ft)
CASING JOINT(S)	9.625	K-55	40.00	14.0	3,017.0

PRODUCTION CASING Report Date: 3/15/1979 00:00

Item	OD (in)	Grade	Wt. (ppf)	TopMD (ft)	BtmMD (ft)
CASING JOINT(S)	7.000	N-80	26.00	14.0	80.6
CASING JOINT(S)	7.000	K-55	23.00	80.6	4,033.6
CASING JOINT(S)	7.000	K-55	26.00	4,033.6	5,962.3
FLAG JOINT	7.000	K-55	26.00	5,962.3	5,984.5
FLAG JOINT	7.000	K-55	26.00	5,984.5	5,997.8
CASING JOINT(S)	7.000	K-55	26.00	5,997.8	6,161.7
FLAG JOINT	7.000	K-55	26.00	6,161.7	6,181.8
CASING JOINT(S)	7.000	K-55	26.00	6,181.8	6,344.6
CASING JOINT(S)	7.000	N-80	26.00	6,344.6	7,787.8
FLOAT COLLAR	7.000			7,787.8	7,789.2
CASING JOINT(S)	7.000	N-80	26.00	7,789.2	7,831.8
FLOAT SHOE	7.000			7,831.8	7,834.0

INNER LINER Report Date: 7/22/1993 00:00

Item	OD (in)	Grade	Wt. (ppf)	TopMD (ft)	BtmMD (ft)
LINER HANGER	6.276	N-80	18.00	6,247.1	6,249.2
CASING JOINT(S)	5.000	N-80	18.00	6,249.2	7,486.6
FLOAT COLLAR	5.000		18.00	7,486.6	7,488.2
GUIDE SHOE	5.000		18.00	7,488.2	7,489.0

Well: 337-35S S/T/R: 35S/30S/24E

CASING CEMENT DETAIL
- - -
Sfc Csg. Cmt Vol.: 450 cf
Hole Size: 17.5"
Top Job: no
Rtns to Sfc: 7 cf
TOC: sfc
- - -

Interm Csg. Cmt Vol.: 1505 cf
Hole Size: 12.25"
Top Job: no
Rtns to Sfc: 180 cf
TOC: sfc
- - -

Prod. Csg. Cmt Vol.: 2755 cf
Hole Size: 8.75"
Top Job: no
Rtns to Sfc: 100 cf
TOC: sfc
- - -

Liner Cmt Vol.:
Hole Size:
Top Job:
Rtns to Sfc:
TTOC:
- - -
Top of Formation:
UBA: 6862'
BLW: 7356'

Volume Behind Pipe:
1.3 Yield Assumed
Theoretical Calculations (TTOC)