OCCIDENTAL OF ELK HILLS INC

342-3G

Event: WELL MAINT - RIG
Event End: 11/10/2007 00:00
Sec. Reason: LOW PRODUCTION

Ground Level: 1,031.0ft
Datum: ORIGINAL KB @ 1,041.00ft (default)
API No.: 0402929021

Wellbore: ORIGINAL HOLE
PBMD: 6,487.0ft
Btm TMD: 7,636.0ft
Spud Date: 5/17/1949 00:00
BH Coord X: 6,147,708.71uss ft
BH Coord Y: 2,285,619.33uss ft

Casing Shoes (ft) | Schematic (12/1/2007) | Openings Top/Btm/Type/Status

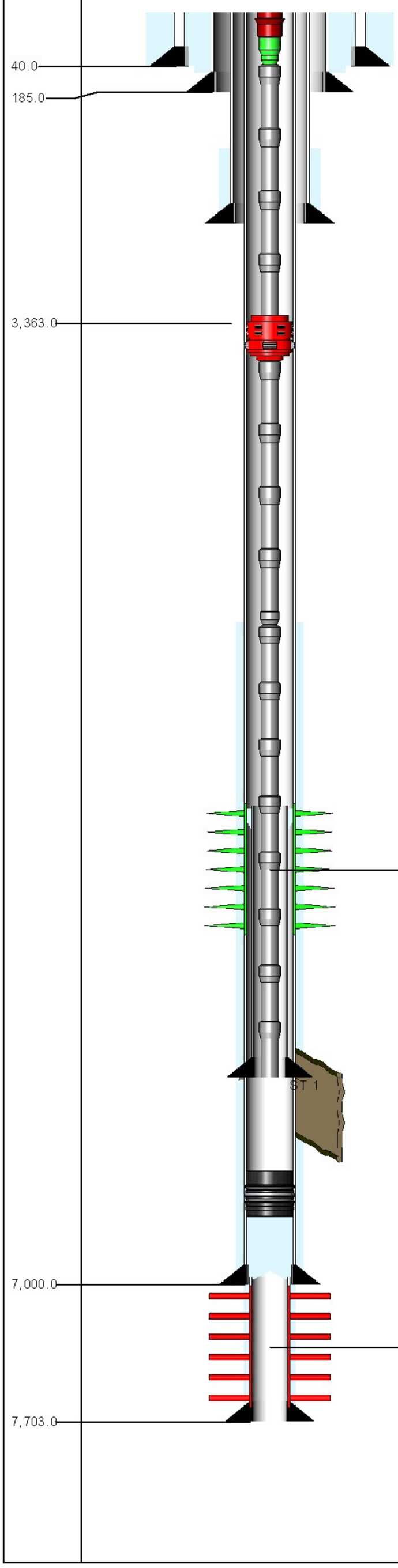

6,175.0ft, 6,195.0ft, PERFORATED, OPEN
6,175.0ft, 6,195.0ft, PERFORATED, OPEN
7,007.0ft, 7,633.0ft, SLOTTED, ABANDONED

ROD STRING Report Date: 11/10/2007 00:00

Component	Top MD (ft)	Btm MD (ft)
POLROD	0.0	30.0
PNYROD	30.0	42.0
ROD	42.0	582.0
R-4PER	582.0	1,602.0
ROD	1,602.0	4,062.0
ROD	4,062.0	6,822.0
RSTBAR	6,822.0	6,826.0
INSPMP	6,826.0	6,850.0

TUBING STRING Report Date: 12/10/2004 00:00

Component	Top MD (ft)	Btm MD (ft)
TH-DBB	10.0	11.0
FATNIP	11.0	11.7
TBGJNT	11.7	5,302.7
AC	5,302.7	5,305.0
TBGJNT	5,305.0	5,399.1
XO	5,399.1	5,400.3
TBGJNT	5,400.3	6,871.3
STNIP	6,871.3	6,872.3
TBGJNT	6,872.3	6,903.3
STCOLL	6,903.3	6,903.7

PLUG BACK Report Date: 5/17/2002 00:00

Component	Top MD (ft)	Btm MD (ft)
CR-PRM	6,653.0	6,656.0

CONDUCTOR CASING Report Date: 5/17/1949 00:00

Item	OD (in)	Grade	Wt. (ppf)	TopMD (ft)	BtmMD (ft)
CASING JOINT(S)	26.000			10.0	40.0

SURFACE CASING Report Date: 6/2/1949 00:00

Item	OD (in)	Grade	Wt. (ppf)	TopMD (ft)	BtmMD (ft)
CASING JOINT(S)	16.000	H-40	65.00	10.0	185.0

INTERMEDIATE CASING Report Date: 6/9/1949 00:00

Item	OD (in)	Grade	Wt. (ppf)	TopMD (ft)	BtmMD (ft)
CASING JOINT(S)	10.750	J-55	45.50	10.0	72.0
CASING JOINT(S)	10.750	J-55	40.50	72.0	2,202.0
CASING JOINT(S)	10.750	J-55	45.50	2,202.0	3,353.0

PRODUCTION CASING Report Date: 7/10/1949 00:00

Item	OD (in)	Grade	Wt. (ppf)	TopMD (ft)	BtmMD (ft)
CASING JOINT(S)	7.000	N-80	26.00	10.0	75.8
CASING JOINT(S)	7.000	N-80	23.00	75.8	5,287.7
CASING JOINT(S)	7.000	N-80	26.00	5,287.7	7,000.0

LINER Report Date: 7/31/1949 00:00

Item	OD (in)	Grade	Wt. (ppf)	TopMD (ft)	BtmMD (ft)
CASING JOINT(S)	5.500	J-55	17.00	6,961.0	7,077.0
SLOTTED LINER	5.500		17.00	7,077.0	7,703.0

LINER Report Date: 7/19/2002 00:00

Item	OD (in)	Grade	Wt. (ppf)	TopMD (ft)	BtmMD (ft)
LINER HANGER PACKER	5.000			6,181.7	6,194.6
PROFILE NIPPLE (OPEN)	5.000			6,194.6	6,197.4
LINER HANGER	5.000			6,197.4	6,204.0
CROSSOVER	5.000	P-110		6,204.0	6,204.8
CASING JOINT(S)	4.500	P-110	11.60	6,204.8	7,633.6
LANDING COLLAR	4.500	P-110	11.60	7,633.6	7,635.2
CASING JOINT(S)	4.500	P-110	11.60	7,635.2	7,673.3
FLOAT COLLAR	4.500	P-110	11.60	7,673.3	7,674.4
CASING JOINT(S)	4.500	P-110	11.60	7,674.4	7,713.1
FLOAT SHOE	4.500	P-110	11.60	7,713.1	7,715.0

Well: 342-3G S/T/R: 3G/31S/24E
Status: P&A May-2002
SQZ LINER USING RETAINER
FROM 6653' - 6656'. WINDOW MILLED IN
7" CASING FROM 6470' - 6475'

CASING CEMENT DETAIL
- - -
Sfc Csg. Cmt Vol.: 520 cf (calc from 400 sx)
Hole Size: 22
Top Job: no
Rtns to Sfc: not recorded
TTOC: sfc
- - -

Interm Csg. Cmt Vol.: 1393 cf (calc from 900 sx)
Hole Size: 15
Top Job: no
Rtns to Sfc: not recorded
TOC: 1760' Thermo Survey
- - -

Prod. Csg. Cmt Vol.: 520 cf (400sx)
Hole Size: 9-5/8"
2 top rubber plugs and 1 bottom rubber plug - good circ during job.
Rtns to Sfc: no
TOC: 5400' Thermo Survey

Liner Cmt Vol.: Hung in 7" csg. - slotted liner
Hole Size: 6-1/8"
Top Job:
Rtns to Sfc:
TOC:
- - -
Top of Formation:
UBA: 7070'
BLW: N/A

Volume Behind Pipe:
1.3 Yield Assumed
Theoretical Calculations (TTOC)