Event: WELL MAINT - RIG
Event End:
Sec. Reason:
End Status:
Well Classification: DEVELOPMENT

OCCIDENTAL OF ELK HILLS INC

353H-35S

Ground Level: 699.0ft
Datum: ORIGINAL KB @ 716.00ft (default)
API No.: 0402958238

Wellbore: ORIGINAL HOLE
PBMD: 6,797.0ft
Btm TMD: 8,545.0ft
Spud Date: 5/15/1978 00:00
BH Coord X: 6,153,373.60uss ft
BH Coord Y: 2,289,764.40uss ft

Casing Shoes (ft)	Schematic (10/1/2009)	Openings Top/Btm/Type/Status

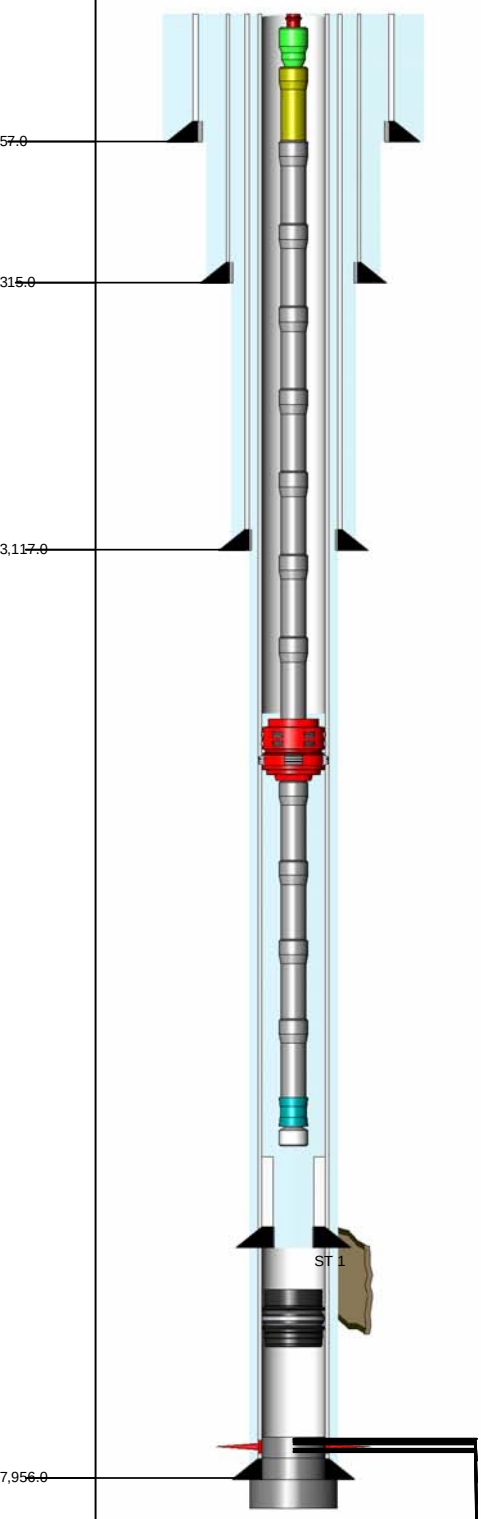

6,997.0ft, 7,003.0ft, PERFORATED, ABANDON
7,027.0ft, 7,050.0ft, PERFORATED, ABANDON
7,070.0ft, 7,090.0ft, PERFORATED, ABANDON
7,126.0ft, 7,152.0ft, PERFORATED, ABANDON
7,158.0ft, 7,214.0ft, PERFORATED, ABANDON
7,237.0ft, 7,298.0ft, PERFORATED, ABANDON
7,460.0ft, 7,540.0ft, PERFORATED, ABANDON
7,595.0ft, 7,630.0ft, PERFORATED, ABANDON
7,648.0ft, 7,658.0ft, PERFORATED, ABANDON

ROD STRING — Report Date: 5/18/2005 00:00

Component	Top MD (ft)	Btm MD (ft)
POLRDL	13.0	49.0
PNYROD	49.0	67.0
ROD	67.0	2,527.0
ROD	2,527.0	2,797.0
R-4PER	2,797.0	3,157.0
ROD	3,157.0	6,517.0
INSPMP	6,517.0	6,517.0

TUBING STRING — Report Date: 5/18/2005 00:00

Component	Top MD (ft)	Btm MD (ft)
TH-DBB	17.0	17.7
FATNIP	17.7	18.4
PUPJNT	18.4	30.6
TBGJNT	30.6	6,487.8
AC	6,487.8	6,490.1
TBGJNT	6,490.1	6,521.6
STNIP	6,521.6	6,522.3
PMPJKT	6,522.3	6,549.0

PLUG BACK — Report Date: 11/2/1999 00:00

Component	Top MD (ft)	Btm MD (ft)
BP-RET	6,797.0	6,799.0

PLUG BACK — Report Date: 10/29/1999 00:00

Component	Top MD (ft)	Btm MD (ft)
CEMENT	6,869.0	7,905.0

PLUG BACK — Report Date: 12/16/1978 00:00

Component	Top MD (ft)	Btm MD (ft)
CEMENT	7,905.0	7,956.0

PLUG BACK — Report Date: 12/14/1978 00:00

Component	Top MD (ft)	Btm MD (ft)
CEMENT	7,956.0	7,968.0

CONDUCTOR CASING — Report Date: 5/15/1978 00:00

Item	OD (in)	Grade	Wt. (ppf)	TopMD (ft)	BtmMD (ft)
CASING JOINT(S)	20.000			17.0	57.0

SURFACE CASING — Report Date: 11/8/1978 00:00

Item	OD (in)	Grade	Wt. (ppf)	TopMD (ft)	BtmMD (ft)
CASING JOINT(S)	13.375	H-40	48.00	17.0	273.3
FLOAT COLLAR	13.375	H-40	48.00	273.3	273.3
CASING JOINT(S)	13.375	H-40	48.00	273.3	314.0
FLOAT SHOE	13.375	H-40	48.00	314.0	315.0

INTERMEDIATE CASING — Report Date: 11/15/1978 00:00

Item	OD (in)	Grade	Wt. (ppf)	TopMD (ft)	BtmMD (ft)
CASING JOINT(S)	9.625	N-80	40.00	17.0	3,074.0
FLOAT COLLAR	9.625	N-80	40.00	3,074.0	3,074.0
CASING JOINT(S)	9.625	N-80	40.00	3,074.0	3,116.0
FLOAT SHOE	9.625	N-80	40.00	3,116.0	3,117.0

PRODUCTION CASING — Report Date: 12/14/1978 00:00

Item	OD (in)	Grade	Wt. (ppf)	TopMD (ft)	BtmMD (ft)
CASING JOINT(S)	7.000	K-55	26.00	17.0	76.0
CASING JOINT(S)	7.000	K-55	23.00	76.0	5,219.0
CASING JOINT(S)	7.000	K-55	26.00	5,219.0	6,505.0
FLAG JOINT	7.000	K-55	26.00	6,505.0	6,523.2
CASING JOINT(S)	7.000	K-55	26.00	6,523.2	7,910.2
FLOAT COLLAR	7.000	K-55	26.00	7,910.2	7,911.9
CASING JOINT(S)	7.000	K-55	26.00	7,911.9	7,953.8
FLOAT SHOE	7.000	K-55	26.00	7,953.8	7,956.0

LINER — Report Date: 12/11/1999 00:00

Item	OD (in)	Grade	Wt. (ppf)	TopMD (ft)	BtmMD (ft)
TIE BACK	6.276		11.60	6,578.5	6,581.1
CASING JOINT(S)	4.500	N-80	11.60	6,581.1	7,852.4
CROSSOVER	4.500	N-80	9.30	7,852.4	7,853.2
CASING JOINT(S)	3.500	L-80	9.30	7,853.2	7,884.7
PUP JOINT	3.500	N-80	9.30	7,884.7	7,889.5
CROSSOVER	3.500	N-80	9.30	7,889.5	7,889.9
FLAPPER VALVE	3.500			7,889.9	7,894.0
CROSSOVER	3.500	N-80	9.30	7,894.0	7,894.6
PUP JOINT	3.500	N-80	9.30	7,894.6	7,910.5
ECP	6.000	N-80	9.30	7,910.5	7,921.2
PUP JOINT	3.500	N-80	9.30	7,921.2	7,926.2
FLOAT COLLAR	3.500			7,926.2	7,927.6
CASING JOINT(S)	3.500	L-80	9.30	7,927.6	7,959.0
SLOTTED LINER	3.500	L-80	9.30	7,959.0	8,550.6
FLOAT SHOE	3.500	N-80	9.30	8,550.6	8,570.8

Well: 353H-35S S/T/R: 35S/30S/24E

CASING CEMENT DETAIL
- - -

Sfc Csg. Cmt Vol.: 450 cf
Hole Size: 15" (Est)
Top Job: No
Rtns to Sfc: 46 cf
TTOC: Surface
- - -

Interm Csg. Cmt Vol.: 1795 cf
Hole Size: 12.25"
Top Job: No
Rtns to Sfc: 80 cf
TTOC: Surface
- - -

Prod. Csg. Cmt Vol.: 2385 cf
Hole Size: 9.875"
Top Job: No
Rtns to Sfc: No
TTOC: 7101'
- - -

Liner Cmt Vol.: 46 cf
Hole Size: 6-1/8' (4-1/2" Liner - 640')
Top Job: NO
Rtns to Sfc : NO
TTOC: Topf of Liner
- - -

Top of Formation:
UBA: 7136'
BLW: 7578'
- - -

Volume Behind Pipe:
1.3 Yield Assumed
Theoretical Calculations (TTOC)