OCCIDENTAL OF ELK HILLS INC

357-34S

Event: WELL MAINT - RIGLESS
Event End:
Sec. Reason:

Ground Level: 842.0ft
Datum: ORIGINAL KB @ 857.00ft (default)
API No.: 0402952247

Wellbore: ORIGINAL HOLE
PBMD: 6,918.0ft
Btm TMD: 7,500.0ft
Spud Date: 2/25/1976 00:00
BH Coord X: 6,148,403.98uss ft
BH Coord Y: 2,287,627.79uss ft

Casing Shoes (ft) | Schematic (8/3/2009) | Openings Top/Btm/Type/Status

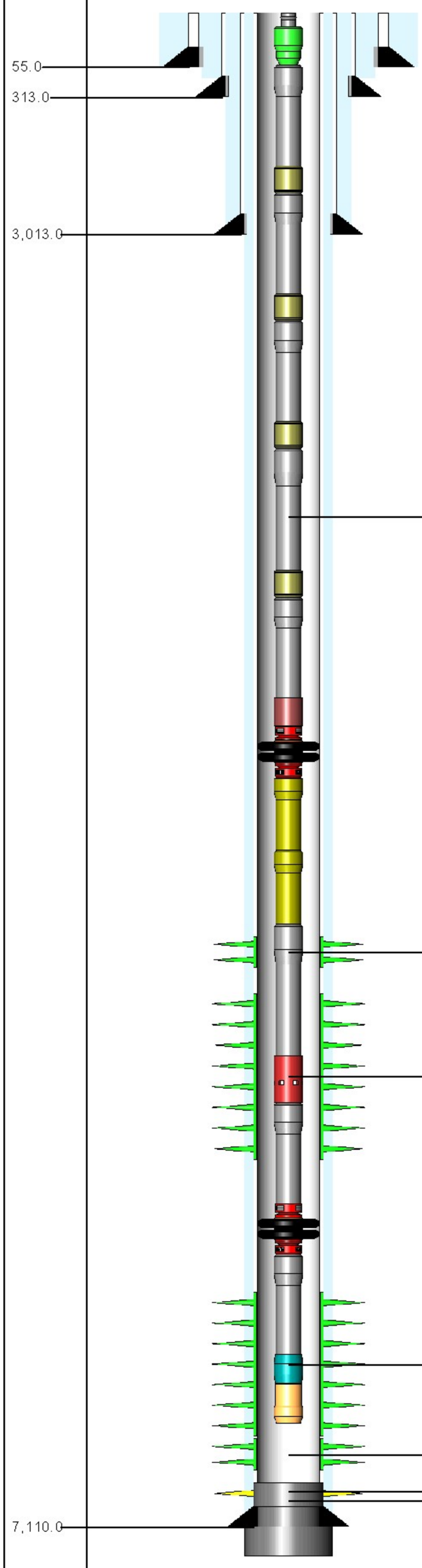

6,100.0ft, 6,101.0ft, WSO PERFS, SQUEE
6,515.0ft, 6,556.0ft, PERFORATED, OPEN
6,576.0ft, 6,646.0ft, PERFORATED, OPEN
6,678.0ft, 6,800.0ft, PERFORATED, OPEN
6,820.0ft, 6,908.0ft, PERFORATED, OPEN
6,928.0ft, 7,008.0ft, PERFORATED, ISOLA
7,020.0ft, 7,040.0ft, PERFORATED, ISOLA

TUBING STRING Report Date: 1/7/2006 00:00

Component	Top MD (ft)	Btm MD (ft)
TH	15.0	16.0
FATNIP	16.0	16.6
TBGJNT	16.6	2,289.1
GLM	2,289.1	2,297.4
TBGJNT	2,297.4	4,040.4
GLM	4,040.4	4,048.9
TBGJNT	4,048.9	5,393.9
GLM	5,393.9	5,402.4
TBGJNT	5,402.4	6,432.8
GLM	6,432.8	6,441.6
TBGJNT	6,441.6	6,472.9
ON-OFF	6,472.9	6,474.7
PKR	6,474.7	6,478.7
PUPJNT	6,478.7	6,488.8
PUPJNT	6,488.8	6,499.1
TBGJNT	6,499.1	6,624.5
SS-C	6,624.5	6,628.4
TBGJNT	6,628.4	6,659.7
PKR	6,659.7	6,666.3
TBGJNT	6,666.3	6,697.3
PRONIP	6,697.3	6,698.4
WLREG	6,698.4	6,698.8

PLUG BACK Report Date: 5/5/2008 00:00

Component	Top MD (ft)	Btm MD (ft)
CEMENT	6,918.0	7,063.0

PLUG BACK Report Date: 7/28/1976 00:00

Component	Top MD (ft)	Btm MD (ft)
CEMENT	7,063.0	7,110.0

PLUG BACK Report Date: 7/27/1976 00:00

Component	Top MD (ft)	Btm MD (ft)
CEMENT	7,110.0	7,500.0

CONDUCTOR CASING Report Date: 2/25/1976 00:00

Item	OD (in)	Grade	Wt. (ppf)	TopMD (ft)	BtmMD (ft)
CASING JOINT(S)	20.000			15.0	55.0

SURFACE CASING Report Date: 7/4/1976 00:00

Item	OD (in)	Grade	Wt. (ppf)	TopMD (ft)	BtmMD (ft)
CASING JOINT(S)	13.375	K-55	54.50	15.0	313.0

INTERMEDIATE CASING Report Date: 7/8/1976 00:00

Item	OD (in)	Grade	Wt. (ppf)	TopMD (ft)	BtmMD (ft)
CASING JOINT(S)	9.625	K-55	40.00	15.0	3,013.0

PRODUCTION CASING Report Date: 7/27/1976 00:00

Item	OD (in)	Grade	Wt. (ppf)	TopMD (ft)	BtmMD (ft)
CASING JOINT(S)	7.000	N-80	26.00	15.0	77.9
CASING JOINT(S)	7.000	K-55	23.00	77.9	4,783.0
CASING JOINT(S)	7.000	N-80	26.00	4,783.0	6,313.5
FLAG JOINT	7.000	N-80	26.00	6,313.5	6,327.8
CASING JOINT(S)	7.000	N-80	26.00	6,327.8	7,063.0
FLOAT COLLAR	7.000	N-80	26.00	7,063.0	7,065.3
CASING JOINT(S)	7.000	N-80	26.00	7,065.3	7,108.2
FLOAT SHOE	7.000	N-80	26.00	7,108.2	7,110.0

Well: 357-34S S/T/R: 34S/30S/24E

CASING CEMENT DETAIL
- - -
Sfc Csg. Cmt Vol.: 425 cf
Hole Size: 17.5"
Top Job: No
Rtns to Sfc: 33 cf
TOC: Sfc
- - -

Interm Csg. Cmt Vol.: 1682 cf
Hole Size: 12.25"
Top Job: No
Rtns to Sfc: 240 cf
TOC: Sfc
- - -

Prod. Csg. Cmt Vol.: 1900 cf
Hole Size: 8.75"
Top Job: No
Rtns to Sfc:
TTOC: Sfc

Liner Cmt Vol.:
Hole Size:
Top Job:
Rtns to Sfc:
TTOC:
- - -
Top of Formation:
UBA: 6676'
BLW: 7070'

Volume Behind Pipe:
1.3 Yield Assumed
Theoretical Calculations (TTOC)