OCCIDENTAL OF ELK HILLS INC

363X-35S

Event: WELL ENHANCEMENT
Event End: 6/22/2009 00:00
Sec. Reason:

Ground Level: 681.0ft
Datum: ORIGINAL KB @ 697.00ft (default)
API No.: 0402967213

Wellbore: ORIGINAL HOLE
PBMD: 7,900.0ft
Btm TMD: 7,975.0ft
Spud Date: 6/28/1982 00:00
BH Coord X: 6,154,242.20uss ft
BH Coord Y: 2,289,672.90uss ft

Casing Shoes (ft) | Schematic (7/1/2009) | Openings Top/Btm/Type/Status

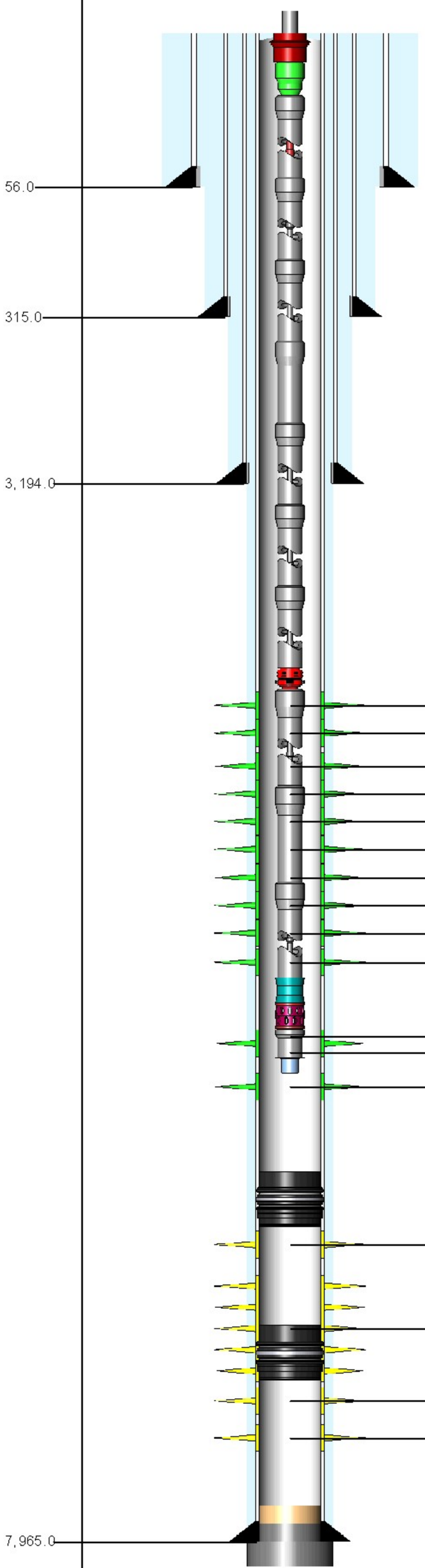

6,856.0ft, 6,874.0ft, PERFORATED, OPEN
6,890.0ft, 6,904.0ft, PERFORATED, OPEN
7,076.0ft, 7,091.0ft, PERFORATED, OPEN
7,106.0ft, 7,131.0ft, PERFORATED, OPEN
7,138.0ft, 7,176.0ft, PERFORATED, OPEN
7,189.0ft, 7,195.0ft, PERFORATED, OPEN
7,214.0ft, 7,239.0ft, PERFORATED, OPEN
7,246.0ft, 7,255.0ft, PERFORATED, OPEN
7,260.0ft, 7,268.0ft, PERFORATED, OPEN
7,284.0ft, 7,296.0ft, PERFORATED, OPEN
7,318.0ft, 7,324.0ft, PERFORATED, OPEN
7,328.0ft, 7,336.0ft, PERFORATED, OPEN
7,350.0ft, 7,363.0ft, PERFORATED, OPEN
7,380.0ft, 7,460.0ft, PERFORATED, ISOLATE
7,490.0ft, 7,585.0ft, PERFORATED, ISOLATE
7,610.0ft, 7,666.0ft, PERFORATED, ISOLATE
7,700.0ft, 7,753.0ft, PERFORATED, ISOLATE

ROD STRING Report Date: 6/12/2009 00:00

Component	Top MD (ft)	Btm MD (ft)
POLROD	0.0	36.0
PNYROD	36.0	60.0
ROD	60.0	3,090.0
ROD	3,090.0	4,530.0
R-4PER	4,530.0	5,340.0
ROD	5,340.0	7,320.0
RSTBAR	7,320.0	7,324.0
INSPMP	7,324.0	7,350.0

TUBING STRING Report Date: 6/11/2009 00:00

Component	Top MD (ft)	Btm MD (ft)
TH-DBB	16.0	16.6
FATNIP	16.6	17.4
CAS	17.4	6,768.7
AC	6,768.7	6,771.1
CAS	6,771.1	7,299.8
STNIP	7,299.8	7,300.9
PRFNIP	7,300.9	7,305.2
CAS	7,305.2	7,336.3
PRGVLV	7,336.3	7,337.1

PLUG BACK Report Date: 6/16/2004 00:00

Component	Top MD (ft)	Btm MD (ft)
BP-DR	7,365.0	7,367.0

PLUG BACK Report Date: 6/14/2004 00:00

Component	Top MD (ft)	Btm MD (ft)
BP-DR	7,576.0	7,578.0

PLUG BACK Report Date: 5/23/2002 00:00

Component	Top MD (ft)	Btm MD (ft)
FILL	7,887.0	7,900.0

PLUG BACK Report Date: 5/9/1983 00:00

Component	Top MD (ft)	Btm MD (ft)
CEMENT	7,900.0	7,965.0

PLUG BACK Report Date: 8/3/1982 00:00

Component	Top MD (ft)	Btm MD (ft)
CEMENT	7,965.0	7,975.0

CONDUCTOR CASING Report Date: 6/28/1982 00:00

Item	OD (in)	Grade	Wt. (ppf)	TopMD (ft)	BtmMD (ft)
CASING JOINT(S)	20.000			16.0	56.0

SURFACE CASING Report Date: 7/9/1982 00:00

Item	OD (in)	Grade	Wt. (ppf)	TopMD (ft)	BtmMD (ft)
CASING JOINT(S)	13.375	H-40	48.00	16.0	271.1
FLOAT COLLAR	13.375	H-40	48.00	271.1	271.2
CASING JOINT(S)	13.375	H-40	48.00	271.2	314.0
FLOAT SHOE	13.375	H-40	48.00	314.0	315.0

INTERMEDIATE CASING Report Date: 7/15/1982 00:00

Item	OD (in)	Grade	Wt. (ppf)	TopMD (ft)	BtmMD (ft)
CASING JOINT(S)	9.625	K-55	40.00	16.0	3,146.6
FLOAT COLLAR	9.625	K-55	40.00	3,146.6	3,146.6
CASING JOINT(S)	9.625	K-55	40.00	3,146.6	3,192.8
FLOAT SHOE	9.625	K-55	40.00	3,192.8	3,194.0

PRODUCTION CASING Report Date: 8/3/1982 00:00

Item	OD (in)	Grade	Wt. (ppf)	TopMD (ft)	BtmMD (ft)
CASING JOINT(S)	7.000	N-80	26.00	16.0	85.2
CASING JOINT(S)	7.000	K-55	23.00	85.2	5,001.9
CASING JOINT(S)	7.000	K-55	26.00	5,001.9	6,675.1
FLAG JOINT	7.000	N-80	26.00	6,675.1	6,694.4
CASING JOINT(S)	7.000	N-80	26.00	6,694.4	7,919.5
FLOAT COLLAR	7.000	N-80	26.00	7,919.5	7,921.5
CASING JOINT(S)	7.000	N-80	26.00	7,921.5	7,962.8
FLOAT SHOE	7.000	N-80	26.00	7,962.8	7,965.0

Well: 363X-35S S/T/R: 36/30S/24E

CASING CEMENT DETAIL
- - -
Sfc Csg. Cmt Vol.: 356 cf
Hole Size: 17.5
Top Job: no
Rtns to Sfc: 25 cf
TOC: sfc
- - -

Interm Csg. Cmt Vol.: 1903 cf
Hole Size: 12.25
Top Job: yes
Rtns to Sfc: yes
TOC: sfc
- - -

Prod. Csg. Cmt Vol.: 1700 cf
Hole Size: 8.75
Top Job: no
Rtns to Sfc: no
TTOC: sfc
- - -

Liner Cmt Vol.:
Hole Size:
Top Job:
Rtns to Sfc:
TOC:
- - -
Top of Formation:
UBA: 7350'
BLW: 7781'

Volume Behind Pipe:
1.3 Yield Assumed
Theoretical Calculations (TTOC)
JEP