OCCIDENTAL OF ELK HILLS INC

366-34S

Event: WELL MAINT - RIG
Event End: 8/15/2007 00:00
Sec. Reason: PIN PART

Ground Level: 814.0ft
Datum: ORIGINAL KB @ 823.00ft (default)
API No.: 0402927665

Wellbore: ORIGINAL HOLE
PBMD: 6,680.0ft
Btm TMD: 7,184.0ft
Spud Date: 7/22/1948 00:00
BH Coord X: 6,149,137.20uss ft
BH Coord Y: 2,288,315.92uss ft

Casing Shoes (ft) | Schematic (9/1/2007) | Openings Top/Btm/Type/Status

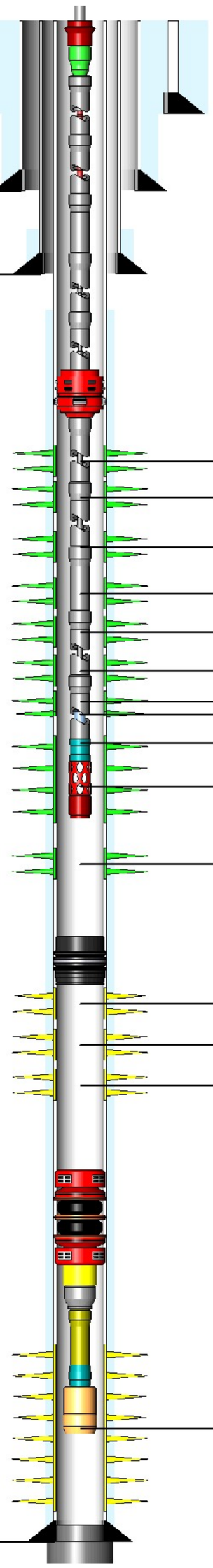

31.0
225.0
3,244.0
7,070.0

6,176.0ft, 6,181.0ft, PERFORATED, OPEN
6,206.0ft, 6,266.0ft, PERFORATED, OPEN
6,348.0ft, 6,359.0ft, PERFORATED, OPEN
6,424.0ft, 6,434.0ft, PERFORATED, OPEN
6,460.0ft, 6,488.0ft, PERFORATED, OPEN
6,506.0ft, 6,512.0ft, PERFORATED, OPEN
6,520.0ft, 6,538.0ft, PERFORATED, OPEN
6,538.0ft, 6,543.0ft, PERFORATED, OPEN
6,564.0ft, 6,569.0ft, PERFORATED, OPEN
6,569.0ft, 6,579.0ft, PERFORATED, OPEN
6,610.0ft, 6,634.0ft, PERFORATED, OPEN
6,692.0ft, 6,768.0ft, PERFORATED, ISOLATE
6,788.0ft, 6,806.0ft, PERFORATED, ISOLATE
6,822.0ft, 6,940.0ft, PERFORATED, ISOLATE
6,960.0ft, 7,015.0ft, PERFORATED, ISOLATE

ROD STRING Report Date: 8/15/2007 00:00

Component	Top MD (ft)	Btm MD (ft)
POLROD	0.0	30.0
PNYROD	30.0	54.0
ROD	54.0	2,484.0
ROD	2,484.0	5,484.0
R-4PER	5,484.0	6,084.0
ROD	6,084.0	6,534.0
RSTBAR	6,534.0	6,538.0
INSPMP	6,538.0	6,562.0

TUBING STRING Report Date: 5/12/2007 00:00

Component	Top MD (ft)	Btm MD (ft)
TH-DBB	9.0	9.6
FATNIP	9.6	11.4
CAS	11.4	5,973.8
AC	5,973.8	5,976.1
CAS	5,976.1	6,568.5
STNIP	6,568.5	6,569.6
PERFJT	6,569.6	6,573.6
STCOLL	6,573.6	6,574.0

PLUG BACK Report Date: 1/12/2005 00:00

Component	Top MD (ft)	Btm MD (ft)
BP-RET	6,680.0	6,682.3

PACKER ASSEMBLY (PERMANENT) Report Date: 2/21/2003 00:00

Component	Top MD (ft)	Btm MD (ft)
PKR-S	6,947.0	6,951.4
MOEXT	6,951.4	6,955.6
XO	6,955.6	6,956.2
PUPJNT	6,956.2	6,962.2
PNIP-O	6,962.2	6,963.6
WLREG	6,963.6	6,964.1

PLUG BACK Report Date: 2/21/1949 00:00

Component	Top MD (ft)	Btm MD (ft)
CEMENT	7,024.0	7,070.0

PLUG BACK Report Date: 2/20/1949 00:00

Component	Top MD (ft)	Btm MD (ft)
CEMENT	7,070.0	7,184.0

CONDUCTOR CASING Report Date: 7/22/1948 00:00

Item	OD (in)	Grade	Wt. (ppf)	TopMD (ft)	BtmMD (ft)
CASING JOINT(S)	26.000			9.0	31.0

SURFACE CASING Report Date: 1/3/1949 00:00

Item	OD (in)	Grade	Wt. (ppf)	TopMD (ft)	BtmMD (ft)
CASING JOINT(S)	16.000	H-40	65.00	9.0	225.0

INTERMEDIATE CASING Report Date: 1/11/1949 00:00

Item	OD (in)	Grade	Wt. (ppf)	TopMD (ft)	BtmMD (ft)
CASING JOINT(S)	10.750	J-55	45.50	9.0	58.0
CASING JOINT(S)	10.750	J-55	40.50	58.0	2,134.0
CASING JOINT(S)	10.750	J-55	45.50	2,134.0	3,244.0

PRODUCTION CASING Report Date: 2/20/1949 00:00

Item	OD (in)	Grade	Wt. (ppf)	TopMD (ft)	BtmMD (ft)
CASING JOINT(S)	7.000	N-80	26.00	9.0	69.0
CASING JOINT(S)	7.000	N-80	23.00	69.0	1,394.0
CASING JOINT(S)	7.000	J-55	23.00	1,394.0	3,113.0
CASING JOINT(S)	7.000	N-80	23.00	3,113.0	5,722.0
CASING JOINT(S)	7.000	N-80	26.00	5,722.0	7,028.0
FLOAT COLLAR	7.000	N-80	26.00	7,028.0	7,028.0
CASING JOINT(S)	7.000	N-80	26.00	7,028.0	7,068.0
FLOAT SHOE	7.000	N-80	26.00	7,068.0	7,070.0

Well: 366-34S S/T/R: 34/30S/24E
Proj#: 22800007
Last Well Status: Active
Status Date: 1-25-2005
Printed: April 2007

CASING CEMENT DETAIL
- - -
Sfc Csg. Cmt Vol.: 827
Hole Size: 22
Top Job: no
Rtns to Sfc: no
TOC: Sfc
- - -

Interm Csg. Cmt Vol.: 903
Hole Size: 15
Top Job: no
Rtns to Sfc: no
TOC: 1565 (TS)
- - -

Prod. Csg. Cmt Vol.: 460
Hole Size: 9.625
Top Job: no
Rtns to Sfc: no
TOC: 4975 (TS)

Liner Cmt Vol.:
Hole Size:
Top Job:
Rtns to Sfc:
TOC:
- - -
Top of Formation:
UBA: 6688'
BLW: 7040'

Volume Behind Pipe:
1.3 Yield Assumed
Theoretical Calculations (TTOC)
RLW