OCCIDENTAL OF ELK HILLS INC

378X-34S

Event: WELL MAINT - RIG
Event End: 1/18/2009 00:00
Sec. Reason: COROD BODY BREAK

Ground Level: 894.3ft
Datum: ORIGINAL KB @ 914.30ft (default)
API No.: 0403015664

Wellbore: ORIGINAL HOLE
PBMD: 6,840.0ft
Btm TMD: 7,650.0ft
Spud Date: 7/13/2000 00:00
BH Coord X: 6,150,100.37uss ft
BH Coord Y: 2,287,372.31uss ft

Casing Shoes (ft)

Schematic (2/1/2009)

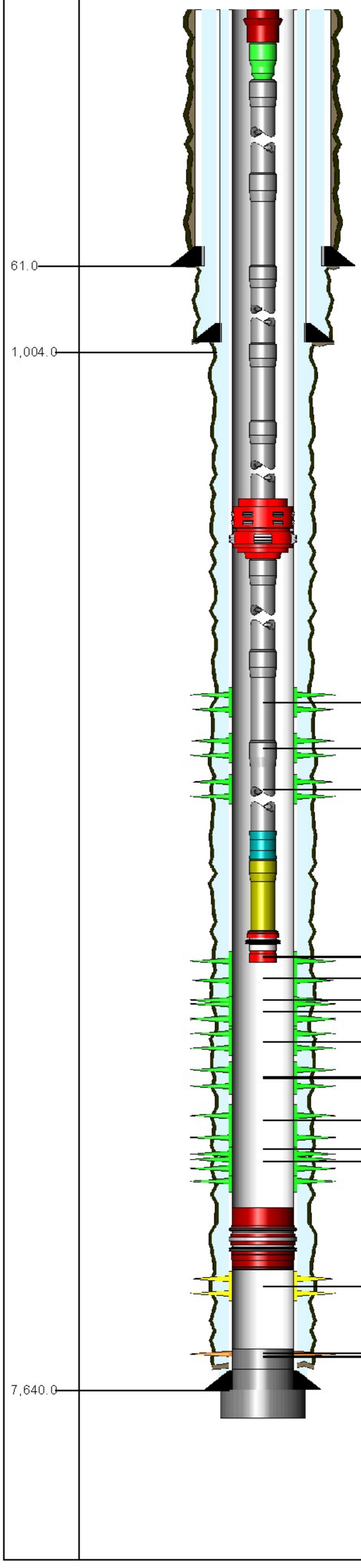

Openings Top/Btm/Type/Status

6,566.0ft, 6,591.0ft, PERFORATED, OPEN
6,615.0ft, 6,642.0ft, PERFORATED, OPEN
6,651.0ft, 6,667.0ft, PERFORATED, OPEN
6,704.0ft, 6,713.0ft, PERFORATED, OPEN
6,704.0ft, 6,715.0ft, PERFORATED, OPEN
6,716.0ft, 6,726.0ft, PERFORATED, OPEN
6,718.0ft, 6,743.0ft, PERFORATED, OPEN
6,736.0ft, 6,741.0ft, PERFORATED, OPEN
6,742.0ft, 6,752.0ft, PERFORATED, OPEN
6,762.0ft, 6,774.0ft, PERFORATED, OPEN
6,762.0ft, 6,778.0ft, PERFORATED, OPEN
6,790.0ft, 6,795.0ft, PERFORATED, OPEN
6,790.0ft, 6,821.0ft, PERFORATED, OPEN
6,804.0ft, 6,820.0ft, PERFORATED, OPEN
6,850.0ft, 6,865.0ft, PERFORATED, ISOLA
6,850.0ft, 6,865.0ft, PERFORATED, ISOLA
7,154.0ft, 7,217.0ft, REPERFORATED, SQ
7,154.0ft, 7,217.0ft, PERFORATED, SQUE
7,236.0ft, 7,250.0ft, PERFORATED, SQUE
7,236.0ft, 7,270.0ft, PERFORATED, SQUE
7,250.0ft, 7,270.0ft, PERFORATED, SQUE

ROD STRING Report Date: 1/17/2009 00:00

Component	Top MD (ft)	Btm MD (ft)
POLROD	0.0	36.0
PNYROD	36.0	48.0
ROD	48.0	2,058.0
ROD	2,058.0	4,338.0
R-6PER	4,338.0	6,618.0
RSTBAR	6,618.0	6,622.0
INSPMP	6,622.0	6,646.0

TUBING STRING Report Date: 11/24/2008 00:00

Component	Top MD (ft)	Btm MD (ft)
TH-DBB	20.0	20.7
FATNIP	20.7	21.3
CAS	21.3	35.8
CAS	35.8	6,319.5
AC	6,319.5	6,321.8
CAS	6,321.8	6,671.8
STNIP	6,671.8	6,672.9
PUPJNT	6,672.9	6,683.1
GASANC	6,683.1	6,715.7

Report Date: 3/18/2008 00:00

Component	Top MD (ft)	Btm MD (ft)
BRP	6,840.0	6,840.0

PLUG BACK Report Date: 11/12/2001 00:00

Component	Top MD (ft)	Btm MD (ft)
CEMENT	7,100.0	7,561.0

PLUG BACK Report Date: 6/20/2001 00:00

Component	Top MD (ft)	Btm MD (ft)
CEMENT	7,561.0	7,640.0

PLUG BACK Report Date: 8/4/2000 00:00

Component	Top MD (ft)	Btm MD (ft)
CEMENT	7,640.0	7,650.0

CONDUCTOR CASING Report Date: 7/10/2000 00:00

Item	OD (in)	Grade	Wt. (ppf)	TopMD (ft)	BtmMD (ft)
CASING JOINT(S)	14.000			20.0	61.0

SURFACE CASING Report Date: 7/14/2000 00:00

Item	OD (in)	Grade	Wt. (ppf)	TopMD (ft)	BtmMD (ft)
CASING JOINT(S)	9.625	K-55	36.00	20.0	1,002.0
GUIDE SHOE	9.625	K-55		1,002.0	1,003.0

PRODUCTION CASING Report Date: 8/4/2000 00:00

Item	OD (in)	Grade	Wt. (ppf)	TopMD (ft)	BtmMD (ft)
CASING JOINT(S)	7.000	N-80	26.00	20.0	6,800.2
FLAG JOINT	7.000	N-80	26.00	6,800.2	6,820.3
CASING JOINT(S)	7.000	N-80	26.00	6,820.3	7,561.3
FLOAT COLLAR	7.000	N-80	26.00	7,561.3	7,563.7
CASING JOINT(S)	7.000	N-80	26.00	7,563.7	7,637.3
FLOAT SHOE	7.000	N-80	26.00	7,637.3	7,640.0

Well: 378X-34S S/T/R: 34S/30S/24E

CASING CEMENT DETAIL
- - -
Sfc Csg. Cmt Vol.: 643 cf
Hole Size: 12.25"
Top Job: No
Rtns to Sfc: 56 cf
TOC: Sfc
- - -

Interm Csg. Cmt Vol.:
Hole Size:
Top Job:
Rtns to Sfc:
TOC:
- - -

Prod. Csg. Cmt Vol.: 1891 cf
Hole Size: 8.75"
Top Job: No
Rtns to Sfc:
TTOC: Sfc
- - -

Liner Cmt Vol.:
Hole Size:
Top Job:
Rtns to Sfc:
TTOC:
- - -
Top of Formation:
UBA: 6843'
BLW: 7339'

Volume Behind Pipe:
1.3 Yield Assumed
Theoretical Calculations (TTOC)