OCCIDENTAL OF ELK HILLS INC

381-4G

Event: WELL MAINT - RIGLESS
Event End: 6/22/2009 00:00
Sec. Reason:

Ground Level: 1,058.0ft
Datum: ORIGINAL KB @ 1,072.00ft (default)
API No.: 0402981809

Wellbore: ORIGINAL HOLE
PBMD: 7,282.0ft
Btm TMD: 7,697.0ft
Spud Date: 1/20/1988 00:00
BH Coord X: 6,144,795.69uss ft
BH Coord Y: 2,286,369.21uss ft

Casing Shoes (ft) | Schematic (7/1/2009) | Openings Top/Btm/Type/Status

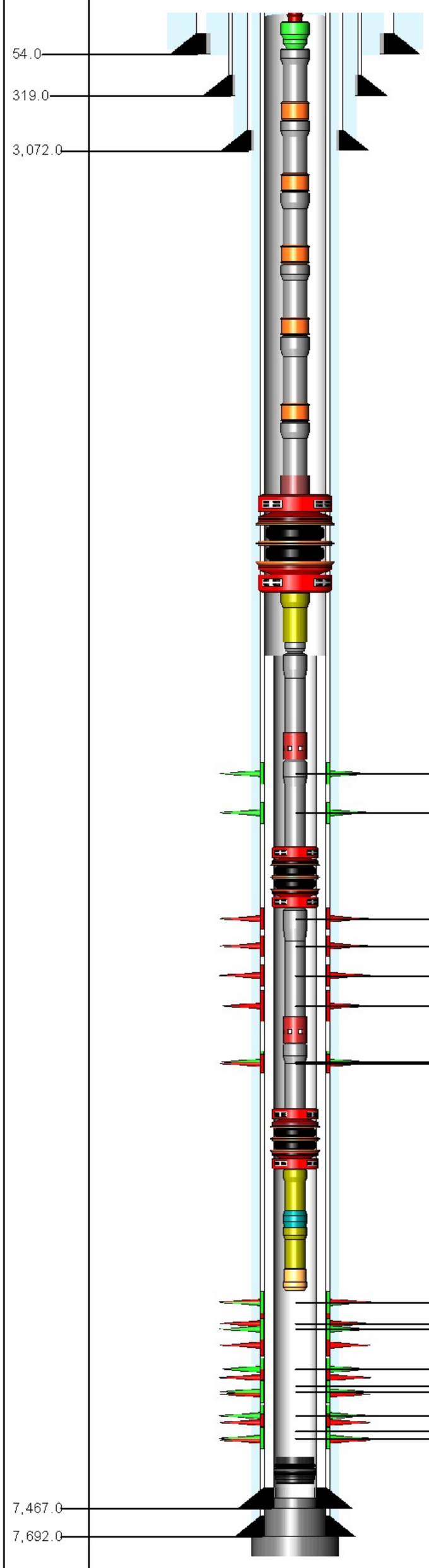

6,730.0ft, 6,751.0ft, PERFORATED, OPEN
6,805.0ft, 6,840.0ft, PERFORATED, OPEN
6,885.0ft, 6,950.0ft, PERFORATED, ABANDO
6,974.0ft, 7,038.0ft, PERFORATED, ABANDO
7,058.0ft, 7,100.0ft, PERFORATED, ABANDO
7,105.0ft, 7,135.0ft, PERFORATED, ABANDO
7,150.0ft, 7,190.0ft, PERFORATED, OPEN
7,155.0ft, 7,190.0ft, PERFORATED, ABANDO
7,234.0ft, 7,242.0ft, PERFORATED, OPEN
7,233.0ft, 7,296.0ft, PERFORATED, ABANDO
7,255.0ft, 7,295.0ft, PERFORATED, OPEN
7,315.0ft, 7,325.0ft, PERFORATED, OPEN
7,320.0ft, 7,340.0ft, PERFORATED, ABANDO
7,332.0ft, 7,340.0ft, PERFORATED, OPEN
7,355.0ft, 7,365.0ft, PERFORATED, OPEN
7,359.0ft, 7,380.0ft, PERFORATED, ABANDO
7,370.0ft, 7,380.0ft, PERFORATED, OPEN

TUBING STRING Report Date: 1/7/2004 00:00

Component	Top MD (ft)	Btm MD (ft)
TH-DBB	14.0	14.5
FATNIP	14.5	15.2
TBGJNT	15.2	2,133.7
GLM-V	2,133.7	2,142.2
TBGJNT	2,142.2	3,779.8
GLM-V	3,779.8	3,788.1
TBGJNT	3,788.1	4,987.1
GLM-V	4,987.1	4,995.9
TBGJNT	4,995.9	5,792.1
GLM-V	5,792.1	5,800.4
TBGJNT	5,800.4	6,381.4
GLM-V	6,381.4	6,390.0
TBGJNT	6,390.0	6,452.8
ON-OFF	6,452.8	6,454.3
PKR-S	6,454.3	6,458.3
PUPJNT	6,458.3	6,464.4
XO	6,464.4	6,465.5
TBGJNT	6,465.5	6,715.3
SS-O	6,715.3	6,719.1
TBGJNT	6,719.1	6,876.9
PKR-S	6,876.9	6,882.6
TBGJNT	6,882.6	7,134.3
SS-O	7,134.3	7,138.1
TBGJNT	7,138.1	7,200.5
PKR-S	7,200.5	7,206.2
PUPJNT	7,206.2	7,216.3
PNIP-O	7,216.3	7,217.3
PUPJNT	7,217.3	7,225.4
WLREG	7,225.4	7,225.8

PLUG BACK Report Date: 2/1/2001 00:00

Component	Top MD (ft)	Btm MD (ft)
BP-DR	7,409.0	7,411.0

PLUG BACK Report Date: 6/27/1998 00:00

Component	Top MD (ft)	Btm MD (ft)
CEMENT	7,425.0	7,467.0

PLUG BACK Report Date: 6/25/1998 00:00

Component	Top MD (ft)	Btm MD (ft)
CEMENT	7,467.0	7,603.0

PLUG BACK Report Date: 4/18/1998 00:00

Component	Top MD (ft)	Btm MD (ft)
CEMENT	7,603.0	7,692.0

PLUG BACK Report Date: 2/18/1998 00:00

Component	Top MD (ft)	Btm MD (ft)
CEMENT	7,692.0	7,697.0

CONDUCTOR CASING Report Date: 1/20/1988 00:00

Item	OD (in)	Grade	Wt. (ppf)	TopMD (ft)	BtmMD (ft)
CASING JOINT(S)	20.000			14.0	54.0

SURFACE CASING Report Date: 1/27/1988 00:00

Item	OD (in)	Grade	Wt. (ppf)	TopMD (ft)	BtmMD (ft)
CASING JOINT(S)	13.375	H-40	48.00	14.0	319.0

INTERMEDIATE CASING Report Date: 2/1/1988 00:00

Item	OD (in)	Grade	Wt. (ppf)	TopMD (ft)	BtmMD (ft)
CASING JOINT(S)	9.625	K-55	40.00	14.0	3,072.0

PRODUCTION CASING Report Date: 2/18/1988 00:00

Item	OD (in)	Grade	Wt. (ppf)	TopMD (ft)	BtmMD (ft)
CASING JOINT(S)	7.000	N-80	26.00	14.0	123.6
CASING JOINT(S)	7.000	N-80	23.00	123.6	5,112.0
CASING JOINT(S)	7.000	K-55	26.00	5,112.0	6,248.3
FLAG JOINT	7.000	K-55	26.00	6,248.3	6,270.3
CASING JOINT(S)	7.000	K-55	26.00	6,270.3	7,019.0
CASING JOINT(S)	7.000	N-80	26.00	7,019.0	7,602.5
FLOAT COLLAR	7.000	N-80	26.00	7,602.5	7,604.5
CASING JOINT(S)	7.000	N-80	26.00	7,604.5	7,690.0
FLOAT SHOE	7.000	N-80	26.00	7,690.0	7,692.0

INNER LINER Report Date: 6/24/1998 00:00

Item	OD (in)	Grade	Wt. (ppf)	TopMD (ft)	BtmMD (ft)
LINER HANGER	6.276	L-80	18.00	6,477.0	6,498.9
CASING JOINT(S)	5.000	L-80	18.00	6,498.9	7,466.5
GUIDE SHOE	5.000	L-80	18.00	7,466.5	7,467.0

Well: 381-4G S/T/R: 4G/30S/24E

CASING CEMENT DETAIL
- - -
Sfc Csg. Cmt Vol. (cf): 500
Hole Size (in.): 17.5
Top Job: no
Rtns to Sfc (cf): 49
TOC (ft): sfc
- - -

Interm Csg. Cmt Vol. (cf): 1450
Hole Size (in.): 12.25
Top Job: no
Rtns to Sfc (cf): 80
TOC (ft): sfc
- - -

Prod. Csg. Cmt Vol. (cf): 1900
Hole Size (in.): 8.75
Top Job: no
Rtns to Sfc (cf): 0
TTOC (ft): sfc

Liner Cmt Vol. (cf):
Hole Size (in.):
Top Job:
Rtns to Sfc (cf):
TOC (ft):
- - -
Top of Formation:
UBA: 6884'
BLW: 7460'

Volume Behind Pipe:
1.3 Yield Assumed
Theoretical Calculations (TTOC)