OCCIDENTAL OF ELK HILLS INC

382-3G

Event: WELL ENHANCEMENT
Event End: 3/15/2006 00:00
Sec. Reason:

Ground Level: 909.0ft
Datum: ORIGINAL KB @ 918.00ft (default)
API No.: 0402929025

Wellbore: ORIGINAL HOLE
PBMD: 6,642.0ft
Btm TMD: 7,740.0ft
Spud Date: 4/21/1948 00:00
BH Coord X: 6,150,462.00uss ft
BH Coord Y: 2,285,670.00uss ft

Casing Shoes (ft) | Schematic (3/15/2006) | Openings Top/Btm/Type/Status

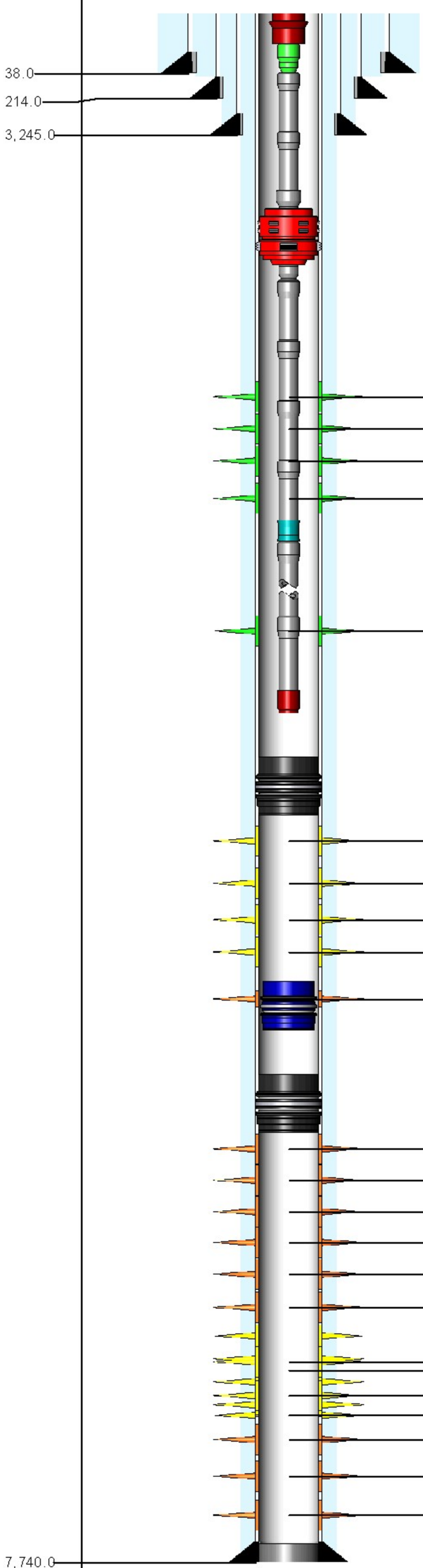

6,530.0ft, 6,540.0ft, PERFORATED, OPEN
6,544.0ft, 6,549.0ft, PERFORATED, OPEN
6,554.0ft, 6,558.0ft, PERFORATED, OPEN
6,575.0ft, 6,584.0ft, PERFORATED, OPEN
6,612.0ft, 6,618.0ft, PERFORATED, OPEN
6,703.0ft, 6,715.0ft, PERFORATED, ISOLATE
6,767.0ft, 6,772.0ft, PERFORATED, ISOLATE
6,797.0ft, 6,804.0ft, PERFORATED, ISOLATE
6,810.0ft, 6,829.0ft, PERFORATED, ISOLATE
6,870.0ft, 6,882.0ft, PERFORATED, SQUEEZ
6,977.0ft, 6,982.0ft, PERFORATED, SQUEEZ
6,996.0ft, 7,001.0ft, PERFORATED, SQUEEZ
7,016.0ft, 7,030.0ft, PERFORATED, SQUEEZ
7,035.0ft, 7,040.0ft, PERFORATED, SQUEEZ
7,059.0ft, 7,075.0ft, PERFORATED, SQUEEZ
7,117.0ft, 7,205.0ft, PERFORATED, SQUEEZ
7,360.0ft, 7,362.0ft, PERFORATED, ISOLATE
7,230.0ft, 7,410.0ft, PERFORATED, ISOLATE
7,380.0ft, 7,382.0ft, PERFORATED, ISOLATE
7,400.0ft, 7,410.0ft, PERFORATED, ISOLATE
7,480.0ft, 7,625.0ft, PERFORATED, SQUEEZ
7,645.0ft, 7,690.0ft, PERFORATED, SQUEEZ
7,700.0ft, 7,710.0ft, PERFORATED, SQUEEZ

ROD STRING Report Date: 3/14/2006 00:00

Component	Top MD (ft)	Btm MD (ft)
POLROD	0.0	30.0
PNYROD	30.0	40.0
ROD	40.0	2,710.0
ROD	2,710.0	6,610.0
INSPMP	6,610.0	6,634.0

TUBING STRING Report Date: 3/13/2006 00:00

Component	Top MD (ft)	Btm MD (ft)
TH-DBB	9.0	10.3
FATNIP	10.3	11.2
TBGJNT	11.2	6,146.8
XO	6,146.8	6,148.3
AC	6,148.3	6,151.2
XO	6,151.2	6,152.7
TBGJNT	6,152.7	6,591.2
STNIP	6,591.2	6,592.3
CAS	6,592.3	6,623.6
STCOLL	6,623.6	6,624.1

PLUG BACK Report Date: 3/9/2006 00:00

Component	Top MD (ft)	Btm MD (ft)
BP-RET	6,642.0	6,654.0

TUBING STRING Report Date: 8/19/2005 00:00

Component	Top MD (ft)	Btm MD (ft)
CR-RET	6,863.0	6,899.4

PLUG BACK Report Date: 6/23/2004 00:00

Component	Top MD (ft)	Btm MD (ft)
BP-DR	6,960.0	6,961.7

PLUG BACK Report Date: 11/30/1948 00:00

Component	Top MD (ft)	Btm MD (ft)
CEMENT	7,715.0	7,740.0

CONDUCTOR CASING Report Date: 4/21/1948 00:00

Item	OD (in)	Grade	Wt. (ppf)	TopMD (ft)	BtmMD (ft)
CASING JOINT(S)	26.000			9.0	38.0

SURFACE CASING Report Date: 9/9/1948 00:00

Item	OD (in)	Grade	Wt. (ppf)	TopMD (ft)	BtmMD (ft)
CASING JOINT(S)	18.625		142.00	9.0	214.0

INTERMEDIATE CASING Report Date: 9/24/1948 00:00

Item	OD (in)	Grade	Wt. (ppf)	TopMD (ft)	BtmMD (ft)
CASING JOINT(S)	13.375	J-55	68.00	9.0	3,245.0

PRODUCTION CASING Report Date: 11/30/1948 00:00

Item	OD (in)	Grade	Wt. (ppf)	TopMD (ft)	BtmMD (ft)
CASING JOINT(S)	8.625	N-80	40.00	9.0	76.0
CASING JOINT(S)	8.625	N-80	36.00	76.0	6,223.0
CASING JOINT(S)	8.625	N-80	40.00	6,223.0	7,740.0

Well: 382-3G S/T/R: 3G/31S/24E

CASING CEMENT DETAIL
- - -
Sfc Csg. Cmt Vol.: 400 sx
Hole Size: 24"
Top Job: No
Rtns to Sfc: Trace
TOC: Sfc
- - -

Interm Csg. Cmt Vol.: 600 sx
Hole Size: 16.5"
Top Job: No
Rtns to Sfc: No
TTOC: 1855'
- - -

Prod. Csg. Cmt Vol.: 800 sx
Hole Size: 12.25"
Top Job: No
Rtns to Sfc: No
TTOC: 5453'

Liner Cmt Vol.:
Hole Size:
Top Job:
Rtns to Sfc:
TTOC:
- - -
Top of Formation:
UBA: 7089'
BLW: 7711'

Volume Behind Pipe:
1.3 Yield Assumed
Theoretical Calculations (TTOC)