San Joaquin Valley
AIR POLLUTION CONTROL DISTRICT

HEALTHY AIR LIVING™

DOCKET
08-AFC-8
DATE JUN 25 2010
RECD. JUL 09 2010

JUN 25 2010

Rod Jones, Project Manager
California Energy Commission
1516 Ninth Street, MS-15
Sacramento, CA 95814

Re: Notice of Preliminary Determination of Compliance (PDOC)
Facility: Hydrogen Energy California LLC (08-AFC-8)
Project Number: S-1093741

Dear Mr. Jones:

In a letter dated June 21, 2010, the District sent you for your review and comment the District's preliminary determination of compliance (PDOC) for above-referenced project. Inadvertently, some confidential information was included in the PDOC sent to you. Therefore, please destroy pages Appendix E-2 and Appendix E-3 from PDOC document, and replace them with the attached two pages.

Thank you for your cooperation in this matter. If you have any questions regarding this matter, please contact Homero Ramirez of Permit Services at (661) 392-5616.

Sincerely,

David Warner
Director of Permit Services

DW:har
Enclosures

Seyed Sadredin
Executive Director/Air Pollution Control Officer

Northern Region
4800 Enterprise Way
Modesto, CA 95356-8718
Tel: (209) 557-6400 FAX: (209) 557-6475

Central Region (Main Office)
1990 E. Gettysburg Avenue
Fresno, CA 93726-0244
Tel: (559) 230-6000 FAX: (559) 230-6061

Southern Region
34946 Flyover Court
Bakersfield, CA 93308-9725
Tel: 661-392-5500 FAX: 661-392-5585

www.valleyair.org www.healthyairliving.com

Printed on recycled paper.

HECA - Total VOC Content of the Gas in Each Process Area	Process Area												
	1	2	3	4	5	6	7	8	9	10	11	12	13
	Methanol	Syn Gas *	Flash Gas - Gasification *	Shifted Syn Gas	Propylene	Sour Water	H_2S Laden Methanol	CO_2 Laden Methanol	Acid Gas	Ammonia-Laden Gas	Sulfur	TGTU Process Gas	TGTU Amine
Total weight percentage of VOC in the gas in each process area	100.00%	[redacted]		0.01%	100.00%	0.00%	53.51%	64.10%	0.54%	0.07%	0.00%	0.03%	43.96%

Note: The following compounds are included as VOCs, although not all compounds are found in the gas in each process area: CH3OH, C3H6, COS, HCN, and MDEA.

* The composition of the Syn Gas and the Flash Gas - Gasifications streams is confidential information.

	Compound	Wt.%												
		Methanol Stream	Syn Gas	Flash Gas - Gasification	Shifted Syn Gas Stream	Propylene Stream	Sour Water Stream	H_2S Laden Methanol Stream	CO_2 Laden Methanol Stream	Acid Gas Stream	Ammonia-Laden Gas Stream	Sulfur Stream	TGTU Process Gas Stream	TGTU Amine Stream
	CO_2	0.00%	[redacted]		90.43%	0.00%	2.50%	44.68%	35.81%	60.32%	68.32%	0.00%	64.65%	1.98%
	CO	0.00%			1.48%	0.00%	0.001%	0.03%	0.04%	0.06%	0.36%	0.00%	0.31%	0.00%
	CH_4	0.00%			0.06%	0.00%	0.00%	0.003%	0.003%	0.002%	0.002%	0.00%	0.00%	0.00%
	H_2S	0.00%			2.05%	0.00%	0.18%	1.73%	0.0001%	39.04%	5.98%	0.03%	1.86%	0.32%
VOC	COS	0.00%			0.01%	0.00%	0.00%	0.01%	0.00%	0.51%	0.02%	0.00%	0.03%	0.00%
VOC	CH_3OH	100.00%			0.00%	0.00%	0.00%	53.51%	64.10%	0.03%	0.00%	0.00%	0.00%	0.00%
VOC	C_3H_6	0.00%			0.00%	100.00%	0.00%	0.00%	0.00%	0.00%	0.00%	0.00%	0.00%	0.00%
	NH_3	0.00%			0.00%	0.00%	0.25%	0.00%	0.00%	0.00%	7.36%	0.00%	0.00%	0.00%
VOC	HCN	0.00%			0.00%	0.00%	0.00%	0.00%	0.00%	0.00%	0.05%	0.00%	0.00%	0.00%
VOC	MDEA	0.00%			0.00%	0.00%	0.00%	0.00%	0.00%	0.00%	0.00%	0.00%	0.00%	43.96%
	Total	100.00%	[redacted]		94.03%	100.00%	2.93%	99.96%	99.95%	99.98%	82.10%	0.03%	66.85%	46.25%
	Percentage of VOC of the entire gas stream *	100.00%			0.01%	100.00%	0.00%	53.51%	64.10%	0.54%	0.07%	0.00%	0.03%	43.96%

* Per District policy (SSP-2015), VOC emissions are not assessed to components handling fluid streams with a VOC content of 10% of less by weight.

Equipment Type	Service	Emission Factor ** (kg/hr/source)		Emission Factor (lb/hr/source)		Control Efficiency **
Valves	Gas	0.00597		0.0132		92%
Valves	Light liquid	0.00403		0.0089		88%
Valves	Heavy liquid	0.00023		0.0005		0%
Pump seals	Light liquid	0.0199		0.0439		75%
Pump seals	Heavy liquid	0.00862		0.0190		0%
Compressor seals	Gas	0.228		0.5027		0%
Pressure relief valves	Gas	0.104		0.2293		0%
Connectors	All	0.00183		0.0040		93%
Open-ended lines	All	0.0017		0.0037		0%
Sampling connectors	All	0.015		0.0331		0%

** Notes:

** Emission factors and control efficiencies are from EPA's 1995 "Protocol for Equipment Leak Emission Estimates".

** Emission factors are from Table 2-1 (SOCMI Average Emission Factors)

** Control efficiencies are from Table 5-2 (Control Effectiveness for an LDAR Program at a SOCMI Process Unit)

** The permittee proposes to implement an LDAR program for the process stream identified as #1, 5, 7-10, so the control efficiencies will apply to those stream.

COMPONENT COUNT	Process Area													
	1	2	3	4	5	6	7	8	9	10	11	12	13	
	Methanol	Syn Gas	Flash Gas - Gasification	Shifted Syn Gas	Propylene	Sour Water	H_2S Laden Methanol	CO_2 Laden Methanol	Acid Gas	Ammonia-Laden Gas	Sulfur	TGTU Process Gas	TGTU Amine	Total
Valves - Gas	50	[redacted]		198	188	0	94	79	161	157	0	72	0	999
Valves - Light Liquid	416			0	288	0	358	79	0	0	0	0	0	1141
Valves - Heavy Liquid	0			0	0	508	0	0	0	0	68	0	264	840
Pumps - Light Liquid	7			0	3	0	7	0	0	0	0	0	0	17
Pumps - Heavy Liquid	0			0	0	17	0	0	0	0	4	0	5	26
Compressors	0			1	1	0	0	0	0	0	0	0	0	2
Connectors	1225			632	1432	1410	1323	516	492	407	297	290	746	8770
Total	1698			831	1912	1935	1782	674	653	564	369	362	1015	11795

CALCULATED EMISSIONS (BY COMPONENT) (lb/day)

Valves - Gas	1.26351181	[redacted]	62.54383481	4.7508044	0	2.37540221	1.99634867	4.06850804	3.967427	0	22.743213	0
Valves - Light Liquid	10.6444839	[redacted]	0	7.3692581	0	9.16039716	2.02142842	0	0	0	0	0
Valves - Heavy Liquid	0	[redacted]	0	0	6.1821072	0	0	0	0	0.827526	0	3.2127486
Pumps - Light Liquid	1.8426214	[redacted]	0	0.7896949	0	1.8426214	0	0	0	0	0	0
Pumps - Heavy Liquid	0	[redacted]	0	0	7.7535604	0	0	0	0	1.824367	0	2.2804589
Compressors	0	[redacted]	12.06368064	12.063681	0	0	0	0	0	0	0	0
Connectors	8.30290757	[redacted]	61.19460737	9.7059295	136.52594	8.96714017	3.497388	3.33471879	2.758599	28.75759	28.079804	72.232875
Total (lb/day):	22.05	[redacted]	135.80	34.68	150.46	22.35	7.52	7.40	6.73	31.41	50.82	77.73

CALCULATED EMISSIONS (BY COMPOUND) (lb/day)	Process Area 1 Methanol	2 Syn Gas	3 Flash Gas - Gasification	4 Shifted Syn Gas	5 Propylene	6 Sour Water	7 H_2S Laden Methanol	8 CO_2 Laden Methanol	9 Acid Gas	10 Ammonia-Laden Gas	11 Sulfur	12 TGTU Process Gas	13 TGTU Amine	
CO_2	0.00E+00	[redacted]		1.23E+02	0.00E+00	3.76E+00	9.98E+00	2.69E+00	4.47E+00	4.60E+00	0.00E+00	3.29E+01	1.54E+00	
CO	0.00E+00	[redacted]		2.01E+00	0.00E+00	2.11E-03	7.71E-03	2.69E-03	4.78E-03	2.45E-02	0.00E+00	1.55E-01	0.00E+00	
CH_4	0.00E+00	[redacted]		8.34E-02	0.00E+00	0.00E+00	6.52E-04	2.29E-04	1.30E-04	1.39E-04	0.00E+00	0.00E+00	0.00E+00	
H_2S	0.00E+00	[redacted]		2.78E+00	0.00E+00	2.74E-01	3.86E-01	7.26E-06	2.89E+00	4.02E-01	9.31E-03	9.45E-01	2.46E-01	
COS	0.00E+00	[redacted]		7.81E-03	0.00E+00	0.00E+00	1.67E-03	0.00E+00	3.78E-02	1.46E-03	0.00E+00	1.75E-02	0.00E+00	
CH_3OH	2.21E+01	[redacted]		0.00E+00	0.00E+00	0.00E+00	1.20E+01	4.82E+00	2.51E-03	0.00E+00	0.00E+00	0.00E+00	0.00E+00	
C_3H_6	0.00E+00	[redacted]		0.00E+00	3.47E+01	0.00E+00	0.00E+00	0.00E+00	0.00E+00	0.00E+00	0.00E+00	0.00E+00	0.00E+00	
NH_3	0.00E+00	[redacted]		0.00E+00	0.00E+00	3.76E-01	0.00E+00	0.00E+00	0.00E+00	4.95E-01	0.00E+00	0.00E+00	0.00E+00	
HCN	0.00E+00	[redacted]		0.00E+00	0.00E+00	0.00E+00	0.00E+00	0.00E+00	0.00E+00	3.14E-03	0.00E+00	0.00E+00	0.00E+00	
MDEA	0.00E+00	[redacted]		0.00E+00	0.00E+00	0.00E+00	0.00E+00	0.00E+00	0.00E+00	0.00E+00	0.00E+00	0.00E+00	3.42E+01	
VOC (lb/day)*	22.05	x	x	x	34.68	x	11.96	4.82	x	x	x	x	34.17	107.67
CO (lb/day)	0.00	20.99	9.41	2.01	0.00	0.00	0.01	0.00	0.00	0.02	0.00	0.16	0.00	32.61

* Per District policy (SSP-2015), VOC emissions are not assessed to components handling fluid streams with a VOC content of 10% of less by weight.

	CALCULATED EMISSIONS (BY COMPOUND) (ton/yr)	Process Area 1 Methanol	2 Syn Gas	3 Flash Gas - Gasification	4 Shifted Syn Gas	5 Propylene	6 Sour Water	7 H_2S Laden Methanol	8 CO_2 Laden Methanol	9 Acid Gas	10 Ammonia-Laden Gas	11 Sulfur	12 TGTU Process Gas	13 TGTU Amine	
	CO_2	0.00E+00	[redacted]		2.24E+01	0.00E+00	6.87E-01	1.82E+00	4.91E-01	8.15E-01	8.39E-01	0.00E+00	6.00E-00	2.81E-01	
	CO	0.00E+00	[redacted]		3.67E-01	0.00E+00	3.85E-04	1.41E-03	4.90E-04	8.72E-04	4.47E-03	0.00E+00	2.83E-02	0.00E+00	
	CH_4	0.00E+00	[redacted]		1.52E-02	0.00E+00	0.00E+00	1.19E-04	4.18E-05	2.37E-05	2.54E-05	0.00E+00	0.00E+00	0.00E+00	
	H_2S	0.00E+00	[redacted]		5.07E-01	0.00E+00	4.99E-02	7.04E-02	1.33E-06	5.28E-01	7.34E-02	1.70E-03	1.72E-01	4.48E-02	
VOC	COS	0.00E+00	[redacted]		1.43E-03	0.00E+00	0.00E+00	3.04E-04	0.00E+00	6.90E-03	2.66E-04	0.00E+00	3.19E-03	0.00E+00	
	CH_3OH	4.02E+00	[redacted]		0.00E+00	0.00E+00	0.00E+00	2.18E+00	8.79E-01	4.57E-04	0.00E+00	0.00E+00	0.00E+00	0.00E+00	
	C_3H_6	0.00E+00	[redacted]		0.00E+00	6.33E+00	0.00E+00	0.00E+00	0.00E+00	0.00E+00	0.00E+00	0.00E+00	0.00E+00	0.00E+00	
	NH_3	0.00E+00	[redacted]		0.00E+00	0.00E+00	6.86E-02	0.00E+00	0.00E+00	0.00E+00	9.03E-02	0.00E+00	0.00E+00	0.00E+00	
	HCN	0.00E+00	[redacted]		0.00E+00	0.00E+00	0.00E+00	0.00E+00	0.00E+00	0.00E+00	5.73E-04	0.00E+00	0.00E+00	0.00E+00	
	MDEA	0.00E+00	[redacted]		0.00E+00	0.00E+00	0.00E+00	0.00E+00	0.00E+00	0.00E+00	0.00E+00	0.00E+00	0.00E+00	6.24E+00	
	VOC (ton/yr)*	4.02	x	x	x	6.33	x	2.18	0.88	x	x	x	x	6.24	19.65
	CO (ton/yr)	0.00	3.83	1.72	0.37	0.00	0.00	0.00	0.00	0.00	0.00	0.00	0.03	0.00	5.95

Based on the location of the stream identified above, steams #1 through 10 will be assessed to the gasification system (S-7616-2), and streams #11 through 13 will be assessed to the sulfur recovery system (S-7616-5). Therefore, fugitive emissions in the amounts listed below will be assessed to those units as:

PE fugitive	VOC (lb/day)	VOC (lb/yr)	CO (lb/day)	CO (lb/yr)
S-7616-2	73.51	26,830	32.5	11,844
S-7616-5	34.17	12,471	0.2	57

San Joaquin Valley
AIR POLLUTION CONTROL DISTRICT

HEALTHY AIR LIVING™

JUN 21 2010

Gregory Skannal
Hydrogen Energy California LLC
One World Trade Center, Suite 1600
Long Beach, CA 90831-1600

Re: Notice of Preliminary Determination of Compliance (PDOC)
Facility: Hydrogen Energy California LLC (08-AFC-8)
Project Number: S-1093741

Dear Mr. Skannal:

Enclosed for your review and comment is the District's preliminary determination of compliance (PDOC) for the installation of a power generation facility that uses integrated gasification combined cycle (IGCC), to produce a hydrogen-rich synthesis gas from coal or petroleum coke to power one combined-cycle combustion turbine generator. The project, which will be located at Section 10, Township 30S, Range 24E in western Kern County, will capture an exhaust stream that is comprised primarily of carbon dioxide and transport it by pipeline to a neighboring oilfield for enhanced oil recovery and sequestration.

The IGCC power generation facility will result in a total net generating capacity of approximately 248 to 251 megawatts (MW) when using exclusively hydrogen-rich fuel derived from coal and petroleum coke blends (390 to 394 gross MW). When firing exclusively on natural gas the power generation facility will result in a total net generating capacity of up to 333 MW (349 gross MW).

The notice of preliminary decision for this project will be published approximately three days from the date of this letter. Please submit your written comments on this project within the 30-day public comment period which begins on the date of publication of the public notice.

Thank you for your cooperation in this matter. If you have any questions regarding this matter, please contact Homero Ramirez of Permit Services at (661) 392-5616.

Sincerely,

for David Warner
Director of Permit Services

DW:har
Enclosures
cc: Julie Mitchell, URS Corporation

Seyed Sadredin
Executive Director/Air Pollution Control Officer

Northern Region
4800 Enterprise Way
Modesto, CA 95356-8718
Tel: (209) 557-6400 FAX: (209) 557-6475

Central Region (Main Office)
1990 E. Gettysburg Avenue
Fresno, CA 93726-0244
Tel: (559) 230-6000 FAX: (559) 230-6061

Southern Region
34946 Flyover Court
Bakersfield, CA 93308-9725
Tel: 661-392-5500 FAX: 661-392-5585

www.valleyair.org www.healthyairliving.com

Printed on recycled paper.

San Joaquin Valley
AIR POLLUTION CONTROL DISTRICT

HEALTHY AIR LIVING™

JUN 21 2010

Mike Tollstrup, Chief
Project Assessment Branch
Stationary Source Division
California Air Resources Board
PO Box 2815
Sacramento, CA 95812-2815

Re: Notice of Preliminary Determination of Compliance (PDOC)
Facility: Hydrogen Energy California LLC (08-AFC-8)
Project Number: S-1093741

Dear Mr. Tollstrup:

Enclosed for your review and comment is the District's preliminary determination of compliance (PDOC) for the installation of a power generation facility that uses integrated gasification combined cycle (IGCC), to produce a hydrogen-rich synthesis gas from coal or petroleum coke to power one combined-cycle combustion turbine generator. The project, which will be located at Section 10, Township 30S, Range 24E in western Kern County, will capture an exhaust stream that is comprised primarily of carbon dioxide and transport it by pipeline to a neighboring oilfield for enhanced oil recovery and sequestration.

The IGCC power generation facility will result in a total net generating capacity of approximately 248 to 251 megawatts (MW) when using exclusively hydrogen-rich fuel derived from coal and petroleum coke blends (390 to 394 gross MW). When firing exclusively on natural gas the power generation facility will result in a total net generating capacity of up to 333 MW (349 gross MW).

The notice of preliminary decision for this project will be published approximately three days from the date of this letter. Please submit your written comments on this project within the 30-day public comment period which begins on the date of publication of the public notice.

Thank you for your cooperation in this matter. If you have any questions regarding this matter, please contact Homero Ramirez of Permit Services at (661) 392-5616.

Sincerely,

for David Warner
Director of Permit Services

DW:har
Enclosures

Seyed Sadredin
Executive Director/Air Pollution Control Dfficer

Northern Region
4800 Enterprise Way
Modesto, CA 95356-8718
Tel: (209) 557-6400 FAX: (209) 557-6475

Central Region (Main Dffice)
1990 E. Gettysburg Avenue
Fresno, CA 93726-0244
Tel: (559) 230-6000 FAX: (559) 230-6061

Southern Region
34946 Flyover Court
Bakersfield, CA 93308-9725
Tel: 661-392-5500 FAX: 661-392-5585

www.valleyair.org www.healthyairliving.com

Printed on recycled paper.

San Joaquin Valley
AIR POLLUTION CONTROL DISTRICT

HEALTHY AIR LIVING™

JUN 2 1 2010

Gerardo C. Rios (AIR 3)
Chief, Permits Office
Air Division
U.S. E.P.A. - Region IX
75 Hawthorne Street
San Francisco, CA 94105

Re: Notice of Preliminary Determination of Compliance (PDOC)
Facility: Hydrogen Energy California LLC (08-AFC-8)
Project Number: S-1093741

Dear Mr. Rios:

Enclosed for your review and comment is the District's preliminary determination of compliance (PDOC) for the installation of a power generation facility that uses integrated gasification combined cycle (IGCC), to produce a hydrogen-rich synthesis gas from coal or petroleum coke to power one combined-cycle combustion turbine generator. The project, which will be located at Section 10, Township 30S, Range 24E in western Kern County, will capture an exhaust stream that is comprised primarily of carbon dioxide and transport it by pipeline to a neighboring oilfield for enhanced oil recovery and sequestration.

The IGCC power generation facility will result in a total net generating capacity of approximately 248 to 251 megawatts (MW) when using exclusively hydrogen-rich fuel derived from coal and petroleum coke blends (390 to 394 gross MW). When firing exclusively on natural gas the power generation facility will result in a total net generating capacity of up to 333 MW (349 gross MW).

The notice of preliminary decision for this project will be published approximately three days from the date of this letter. Please submit your written comments on this project within the 30-day public comment period which begins on the date of publication of the public notice.

Thank you for your cooperation in this matter. If you have any questions regarding this matter, please contact Homero Ramirez of Permit Services at (661) 392-5616.

Sincerely,

for David Warner
Director of Permit Services

DW:har
Enclosures

Seyed Sadredin
Executive Director/Air Pollution Control Officer

Northern Region
4800 Enterprise Way
Modesto, CA 95356-8718
Tel: (209) 557-6400 FAX: (209) 557-6475

Central Region (Main Office)
1990 E. Gettysburg Avenue
Fresno, CA 93726-0244
Tel: (559) 230-6000 FAX: (559) 230-6061

Southern Region
34946 Flyover Court
Bakersfield, CA 93308-9725
Tel: 661-392-5500 FAX: 661-392-5585

www.valleyair.org www.healthyairliving.com

Printed on recycled paper.

San Joaquin Valley
AIR POLLUTION CONTROL DISTRICT

HEALTHY AIR LIVING™

JUN 2 1 2010

Rod Jones, Project Manager
California Energy Commission
1516 Ninth Street, MS-15
Sacramento, CA 95814

Re: Notice of Preliminary Determination of Compliance (PDOC)
Facility: Hydrogen Energy California LLC (08-AFC-8)
Project Number: S-1093741

Dear Mr. Jones:

Enclosed for your review and comment is the District's preliminary determination of compliance (PDOC) for the installation of a power generation facility that uses integrated gasification combined cycle (IGCC), to produce a hydrogen-rich synthesis gas from coal or petroleum coke to power one combined-cycle combustion turbine generator. The project, which will be located at Section 10, Township 30S, Range 24E in western Kern County, will capture an exhaust stream that is comprised primarily of carbon dioxide and transport it by pipeline to a neighboring oilfield for enhanced oil recovery and sequestration.

The IGCC power generation facility will result in a total net generating capacity of approximately 248 to 251 megawatts (MW) when using exclusively hydrogen-rich fuel derived from coal and petroleum coke blends (390 to 394 gross MW). When firing exclusively on natural gas the power generation facility will result in a total net generating capacity of up to 333 MW (349 gross MW).

The notice of preliminary decision for this project will be published approximately three days from the date of this letter. Please submit your written comments on this project within the 30-day public comment period which begins on the date of publication of the public notice.

Thank you for your cooperation in this matter. If you have any questions regarding this matter, please contact Homero Ramirez of Permit Services at (661) 392-5616.

Sincerely,

David Warner
Director of Permit Services

DW:har
Enclosures

Seyed Sadredin
Executive Director/Air Pollution Control Officer

Northern Region
4800 Enterprise Way
Modesto, CA 95356-8718
Tel: (209) 557-6400 FAX: (209) 557-6475

Central Region (Main Office)
1990 E. Gettysburg Avenue
Fresno, CA 93726-0244
Tel: (559) 230-6000 FAX: (559) 230-6061

Southern Region
34946 Flyover Court
Bakersfield, CA 93308-9725
Tel: 661-392-5500 FAX: 661-392-5585

www.valleyair.org www.healthyairliving.com

Printed on recycled paper.

Bakersfield Californian

NOTICE OF PRELIMINARY DECISION
FOR THE PROPOSED ISSUANCE OF
DETERMINATION OF COMPLIANCE

NOTICE IS HEREBY GIVEN that the San Joaquin Valley Unified Air Pollution Control District solicits public comment on the proposed issuance of determination of compliance (DOC) to Hydrogen Energy California LLC for the installation of a power generation facility that uses integrated gasification combined cycle (IGCC), to produce a hydrogen-rich synthesis gas from coal or petroleum coke to power one combined-cycle combustion turbine generator The project, which will be located at Section 10, Township 30S, Range 24E in western Kern County, will capture an exhaust stream that is comprised primarily of carbon dioxide and transport it by pipeline to a neighboring oilfield for enhanced oil recovery and sequestration.

The IGCC power generation facility will result in a total net generating capacity of approximately 248 to 251 megawatts (MW) when using exclusively hydrogen-rich fuel derived from coal and petroleum coke blends (390 to 394 gross MW). When firing exclusively on natural gas the power generation facility will result in a total net generating capacity of up to 333 MW (349 gross MW).

The analysis of the regulatory basis for these proposed actions, Project #S-1093741, is available for public inspection at the District office at the address below or at http://www.valleyair.org/notices/public_notices_idx.htm. Written comments on this project must be submitted within 30 days of the publication date of this notice to **DAVID WARNER, DIRECTOR OF PERMIT SERVICES, SAN JOAQUIN VALLEY UNIFIED AIR POLLUTION CONTROL DISTRICT, 34946 FLYOVER COURT, BAKERSFIELD, CA 93308.**

PRELIMINARY DETERMINATION OF COMPLIANCE EVALUATION

Hydrogen Energy California Project
California Energy Commission
Application for Certification Docket #: 08-AFC-8

Facility Name:	Hydrogen Energy California, LLC
Mailing Address:	One World Trade Center, Suite 1600 Long Beach, CA 90831-1600
Contact Name:	Gregory D. Skannal, HSSE Manager
Telephone:	(562) 276-1511
Fax:	(801) 910-3427
E-Mail:	gregory.skannal@hydrogenenergy.com
Alternate Contact:	Julie Mitchell, Sr. Air Quality Scientist
Telephone:	(619) 243-2833
Fax:	(619) 293-7920
E-Mail:	julie_mitchell@urscorp.com
Engineer:	Homero Ramirez
Lead Engineer:	Allan Phillips, Supervising Air Quality Engineer
Date:	
Project #:	S-1093741
Application #'s:	S-7616-1-0 through '-9-0 and '-11-0 through '-16-0
Submitted:	June 26, 2009
Deemed Complete:	August 3, 2009

Table of Contents

Section		Page
I.	Proposal	1
II.	Applicable Rules	2
III.	Project Location	3
IV.	Process Description	3
V.	Equipment Listing	22
VI.	Emission Control Technology Evaluation	24
VII.	General Calculations	34
VIII.	Compliance	63
IX.	Recommendation	154

APPENDIX A - Determination of Compliance Conditions

APPENDIX B - BACT Guidelines

APPENDIX C - Top Down BACT Analyses

APPENDIX D - Process Flow Diagrams

APPENDIX E - Fugitive Emission Calculations

APPENDIX F - Appendix S Applicability Determination

APPENDIX G - Compliance Certification

APPENDIX H - Health Risk Analysis and Ambient Air Quality Analysis

APPENDIX I - Hazardous Air Pollutant Summary

APPENDIX J - California Energy Commission Comments and District Responses

APPENDIX K - Air Resources Board Comments and District Responses

APPENDIX L - HECA Comments and District Responses

I. Proposal

Hydrogen Energy California, LLC (HECA), which is jointly owned by BP Alternative Energy North America Inc. and Rio Tinto Hydrogen Energy LLC, is seeking approval from the San Joaquin Valley Air Pollution Control District for the installation of a power generation facility that uses integrated gasification combined cycle (IGCC), a technology that turns coal or petroleum coke into a synthesis gas (syngas). The facility will gasify petroleum coke, coal, or blends of petroleum coke and coal to produce hydrogen-rich syngas and capture an exhaust stream that is comprised primarily of carbon dioxide (CO2), a greenhouse gas, and transport it by pipeline to a neighboring oilfield for enhanced oil recovery (EOR) and sequestration.

The power generation facility will consist of one combined-cycle combustion turbine generator (CTG) that can be fired on hydrogen-rich syngas fuel or natural gas or a combination of both. The integrated combined cycle (IGCC) power generation facility will operate in combined cycle mode resulting in a total net generating capacity of approximately 248 to 251 megawatts (MW) when using exclusively hydrogen-rich fuel derived from coal and petroleum coke blends (390 to 394 gross MW). When firing exclusively on natural gas the power generation facility will result in a total net generating capacity of up to 333 MW (349 gross MW).

The facility will include a gasification block that will gasify coke/coal to produce a synthesis gas (syngas) that will be processed and purified to produce a hydrogen-rich gas. The gasification block will be served by three natural gas fired refractory heaters and an elevated flare. This hydrogen-rich gas will be used to fuel the combustion turbine for electric power generation, and a portion of the hydrogen-rich gas will also be used as supplemental fuel to fire the heat recovery steam generator (HRSG) that produces steam from the combustion turbine exhaust heat.

The project will also include a feedstock handling system which will process and grind coke/coal that will feed the gasification block. Additionally, the project will include a sulfur recovery system including a sulfur recovery unit, a tail gas treating unit, and a tail gas thermal oxidizer. The project will also include a CO2 venting system allowing for a release stream from the acid gas removal unit and the tail gas treating unit. Additionally, the project will include three diesel-fired emergency standby engines, two of which will power electrical generators and one powering a firewater pump, and three multi-cell mechanical draft cooling towers serving the air separation unit, the power block, and the gasification unit.

Hydrogen Energy (HECA) is subject to approval by the California Energy Commission (CEC). Pursuant to SJVAPCD Rule 2201, Section 5.8, the Determination of Compliance (DOC) review is functionally equivalent to an Authority to Construct (ATC) review. The Determination of Compliance (DOC) will be issued and submitted to the CEC contingent upon SJVAPCD approval of the project.

The California Energy Commission (CEC) is the lead agency for this project for the requirements of the California Environmental Quality Act (CEQA). Additionally, the project is subject to Prevention of Significant Deterioration requirements by EPA Region IX.

II. Applicable Rules

Rule 1080 Stack Monitoring (12/17/92)
Rule 1081 Source Sampling (12/16/93)
Rule 1100 Equipment Breakdown (12/17/92)
Rule 2010 Permits Required (12/17/92)
Rule 2201 New and Modified Stationary Source Review Rule (9/21/06)
Rule 2520 Federally Mandated Operating Permits (6/21/01)
Rule 2540 Acid Rain Program (11/13/97)
Rule 2550 Federally Mandated Preconstruction Review for Major Sources of Air Toxics (6/18/98)
Rule 4001 New Source Performance Standards (4/14/99) - Subpart GG - Standards of Performance for Stationary Gas Turbines NSPS Subpart KKKK - Standards of Performance for Stationary Gas Turbines
Rule 4002 National Emissions Standards for Hazardous Air Pollutants (5/18/00)
Rule 4101 Visible Emissions (2/17/05)
Rule 4102 Nuisance (12/17/92)
Rule 4201 Particulate Matter Concentration (12/17/92)
Rule 4202 Particulate Matter Emission Rate (12/17/92)
Rule 4301 Fuel Burning Equipment (12/17/92)
Rule 4304 Equipment Tuning Procedure for Boilers, Steam Generators and Process Heaters (10/19/95)
Rule 4305 Boilers, Steam Generators and Process Heaters – Phase 2 (8/21/03)
Rule 4306 Boilers, Steam Generators and Process Heaters – Phase 3 (3/17/05)
Rule 4311 Flares (6/18/09)
Rule 4320 Advanced Emissions Reduction Options for Boilers, Steam Generators, and Process Heaters Greater than 5.0 MMBtu/hr (10/16/08)
Rule 4351 Boilers, Steam Generators and Process Heaters – Phase 1 (8/21/03)
Rule 4701 Stationary Internal Combustion Engines – Phase 1 (8/21/03)
Rule 4702 Stationary Internal Combustion Engines – Phase 2 (1/18/07)
Rule 4703 Stationary Gas Turbines (8/17/06)
Rule 4801 Sulfur Compounds (12/17/92)
Rule 7012 Hexavalent Chromium - Cooling Towers (12/17/92)
Rule 8011 General Requirements (8/19/04)
Rule 8021 Construction, Demolition, Excavation, Extraction and Other Earthmoving Activities (8/19/04)
Rule 8031 Bulk Materials (8/19/04)
Rule 8051 Open Areas (8/19/04)
Rule 8061 Paved and Unpaved Roads (8/19/04)
Rule 8071 Unpaved Vehicle/Equipment Traffic Areas (9/16/04)
CH&SC 41700 Health Risk Assessment
Title 13 California Code of Regulations (CCR), Section 2423 – Exhaust Emission Standards and Test Procedures, Off-Road Compression-Ignition Engines and Equipment
Title 17 California Code of Regulations (CCR), Section 93115 - Airborne Toxic Control Measure (ATCM) for Stationary Compression-Ignition (CI) Engines
California Environmental Quality Act (CEQA)
CH&SC 42301.6 School Notice

CH&SC 44300 (Air Toxic "Hot Spots")
40 CFR Part 51 Appendix S - Federal NSR Requirements for PM2.5

III. Project Location

The site is located approximately 7 miles west of outermost edge of the city of Bakersfield and approximately 1.5 miles northwest of the unincorporated community of Tupman in western Kern County. The equipment will be located in Section 10, Township 30S, Range 24E. The equipment is not located within 1,000 feet of the outer boundary of a K-12 school. Therefore, the public notification requirement of California Health and Safety Code 42301.6 is not applicable to this project.

IV. Process Description

Combined Cycle Combustion Turbine Generator (S-7616-9-0):

Combined Cycle Power Generation

The combined cycle portion of the power block is similar to a state-of-the-art combined cycle power plant. Major equipment consists of a heavy duty gas turbine, a steam turbine and an heat recovery steam generator (HRSG), a triple pressure level reheat design comprised of a series of heat exchangers that utilize the CTG exhaust energy to heat boiler feedwater to saturation conditions, then vaporize and superheat the steam. Other power block equipment includes a condenser, cooling tower, deaerator, and boiler feedwater and condensate pumps.

Power is produced by the consumption of hydrogen-rich syngas and/or natural gas to meet the parasitic load of the accompanying gasification plant and for export to the PG&E electric grid. Natural gas can be co-fired with hydrogen-rich fuel when only one gasifier is operating. Natural gas also serves as a backup fuel to allow continued electrical power export when hydrogen-rich fuel is not available. The power block integrates the process heat generated within the gasification plant by the exothermic water-gas shift reaction and the sulfur recovery unit (SRU) hydrogen sulfide oxidation reaction. Boiler feedwater from the power block deaerator is supplied to generate saturated steam at multiple pressure levels utilizing this heat. Excess high pressure (HP), intermediate pressure (IP) and low pressure (LP) steam and that generated in the heat recovery steam generator (HRSG) with gas turbine exhaust heat and duct burner heat release are superheated in the HRSG before being admitted to the reheat system turbine generator (STG).

The STG exhausts into a water-cooled condenser, where the heat is rejected to a multi-cell mechanical draft wet cooling tower via a circulating water system. The condensate leaving the condenser hot well is heated and deaerated before returning to the HRSG LP system and integrated process heat exchangers.

Combustion Turbine Generator

The heavy duty combustion turbine generator (CTG) is made up of an axial flow air compressor, diffusion-flame combustion system, an axial flow turbine, and a hydrogen-

cooled generator. Ambient air is filtered and cooled in an evaporative cooler before entering the compressor sections. The compressor is multi-stage design, which nearly adiabatically compresses the air through a process of transferring the energy imparted by the rotating blade to pressure rise in the diffusing stationary blade. This compression process also raises the air temperature before discharging to the combustion system. The compressor has air extraction ports on the outer stationary shell and the inner rotor.

During startup, air is extracted from the shell side to balance the flow passing ability of the front stages with the later stages. During normal operation, air is extracted for cooling the hot gas path parts that make up the turbine section. Air extracted through the outer shell is used to cool the stationary turbine parts, including the nozzles, bucket stationary shrouds, and the turbine shell. Air extracted inward through the rotor supplies cooling air for the inner passages and rotating parts, including the buckets, the rotors, and the wheel spaces between the rotors.

Air leaves the compressor at elevated pressure and temperature, and enters the combustion section. The combustion system is made up of multiple combustion cans (chambers) that equally divide the flow, allowing for controlled combustion reaction zones. Each combustor can have a set of hydrogen fuel and natural gas fuel nozzles, as well as nitrogen and stream diluent injection nozzles. Dilution holes in the combustion liners are designed to control the combustion zone air, fuel, and diluent mixing in such a way as to suppress the combustion temperatures and thus limit the amount of nitrogen oxides formed. The hot combustion gases leave the combustion system through the transition piece and enter the turbine section.

The high pressure and temperature gas entering the turbine passes through the stationary nozzle to the rotating bucket. There are three such stages in the turbine which extracts energy form expanding gases; providing the torque that drives the axial compressor and the generator. The machine is a cold-end drive design, where the shaft torque generated in the turbine section is transmitted through the compressor shaft to the generator. This allows for the turbine exhaust gas converted to pressure or potential energy. The advantage of the diffuser is that it allows the turbine to operate at a lower back pressure, increasing power generation. Flow exiting the diffuser enters the HRSG transition duct upstream of the first superheater coils.

The hydrogen cooled generator shaft is connected through a coupling to the CTG shaft at the compressor end of the machine. The generator typically converts mechanical energy to electrical energy, with additional auxiliary loads required to energize the excitation system, operate the lubricating oil system, and the support systems. Mechanical losses from the bearing also take away from the net electrical generation. Hydrogen is used as the coolant, which requires carbon dioxide and compressed air purging systems to ready the generator for safe maintenance.

The CTG operation is supported by separate skids that house the lube oil system, the fuel, and the diluent metering systems, and other services, including fire detection and protection, control system, and compressor wash system, etc. The enclosure around the CTG has a controlled operating environment, with a ventilation system designed to protect

against undesirable outside temperatures and maintain safe conditions, with fire detection and protection.

Heat Recovery Steam Generator

The CTG exhausts into the heat recovery steam generator (HRSG) after a short transition duct. The HRSG is a triple pressure level reheat design. The HRSG is comprised of a series of heat exchangers that utilize the CTG exhaust energy to heat boiler feedwater to saturation conditions, then vaporize and superheat the steam. Also, HP STG exhaust steam is reheated in the HRSG before being returned to the intermediate pressure (IP) section of the STG. The HRSG includes a duct burner to elevate the exhaust gas temperature, a selective catalytic reduction (SCR) system to control the stack NOx emissions.

Each HRSG pressure level system consists of economizing, evaporating, and superheating sections. The LP economizer is fed from the deaerator and the IP and HP economizers are fed from the LP drum. Condensate enters the HRSG feedwater heater section after leaving the condenser hotwell, combined with the make-up water and heated with process heat. The feedwater heater heats the feedwater to within 20 degrees F of the deaerator saturation temperature at the deaerator operating pressure of 30 pounds per square inch absolute (psia). The off-base deaerator utilizes stripping steam from the LP drum to remove entrained oxygen before supplying the HRSG and the process low-temperature gas cooling (LTGC) system with boiler feedwater.

The LTGC system transfers heat from the hot syngas, leaving the shift converters to a multi-pressure level system that generates saturated steam from deaerated feedwater. This steam satisfies the requirements of the gas processing units and other users, with excess HP, IP, and LP saturated steam sent to augment HRSG steam production.

Steam Turbine Generator

The steam turbine generator (STG) is a 160 MW (nominal) sliding-pressure reheat design, with the HP section discharge steam sent back to the HRSG to be reheated before admission to the IP section. The IP section discharges into the cross-over pipe where LP steam from the HRSG is admitted before entering the double flow LP section. The flow splits and expands through separate LP turbines before exhausting downward into the condenser. The turbine sections are on a common shaft, which connects through a coupling to a hydrogen cooled generator.

The STG has supporting systems, including a gland steam condenser, a steam seal regulator, lube oil and hydraulic oil systems, and control system. The steam seal system manages the use of leakages from the HP section seals to provide sealing for the lower pressure sections, as well as provide excess steam to the gland seal condenser.

Heat Rejection System

The excess thermal energy in the steam exhausted to the condenser is dissipated in the heat rejection system. This system is comprised of a condenser, a circulating water system, and a multi-cell cooling tower.

The condenser is a shell and tube heat exchanger with the steam condensing on the shell side under a vacuum and the cooling water flowing through the tubes in a single or double pass design. The condensate collects in the condenser hotwell, where it supplies the condensate pumps that feed the HRSG. The heat in the condenser is picked up by the circulating water system and transferred to the cooling tower. An auxiliary cooling water system also transfers heat to the cooling tower from the cooling duties of the hydrogen-cooled generators, the auxiliary CTG, and other power block equipment.

Feedstock Handling System (S-7616-1-0):

A simplified process flow diagram of the Feedstock, Handling, and Storage system is shown in Figure 2-2 (Flow Diagram Feedstock Handling and Storage) in Appendix D. This operation will consist of the following emissions units, each served by their own dust collection system consisting of hoods and baghouses.

Truck Feedstock Unloading:	DC-1
Feedstock (Coke/Coal) Storage Silos (filling):	DC-2
Mass Flow Bins (in/out):	DC-3
Coke/Coal Silos (loadout):	DC-4
Grinder/Crusher:	DC-5
Fluxant Bins (filling):	DC-6

The primary feedstocks for this project are petroleum coke from California refineries and western bituminous coal. The feedstock will be received in a feedstock/bulk truck unloading building, and then transported via enclosed conveyors to one of three cone-bottom feedstock storage silos. Feedstock reclaimed from the silos will be transported via an enclosed conveyor to a pre-crushing system and then to the feedstock bins in the Grinding and Slurry Prep building. Feedstock blending (when required) will be accomplished by reclaiming appropriate amounts of feedstock simultaneously from multiple feedstock storage silos. The feedstock handling system will be controlled by a dust collection system consisting of hoods and baghouses. Tramp metal removal will be accomplished using magnets and metal detectors. A dust collection system consisting of hoods and baghouses will control particulate ernissions.

Fluxant (crushed aggregate, rock, or sand) is added to the petroleum coke feedstock to achieve the proper molten flow characteristics of the gasification solids at acceptable gasifier operating temperatures. Fluxant will be delivered to the project site via truck from regional sources. The fluxant trucks will be unloaded using a pneumatic transport system into the fluxant storage bins. A dust collection system consisting of hoods and baghouses will control particulate emissions.

Gasification System (S-7616-2-0):

Gasification Technology Selection

GE quench gasification technology was identified as the best fit to meet the specific requirements of the proposed Project, when taking into account key decision criteria, including the lifecycle cost of electricity and reducing technology risk through demonstrated commercial operation with similar (petcoke and coal) feedstocks, at similar capacity and operating conditions. As part of the design evaluation, both of GE's gasification designs were evaluated, these are referred to as radiant and quench. GE's radiant design has been incorporated in their integrated gasification combined cycle (IGCC) reference plant, and GE considers it to be the preferred choice for IGCC power plants that do not require high levels of carbon capture. GE's quench design is simpler and has been applied widely in syngas generation for chemical production, particularly where sour shift is used to increase syngas hydrogen (and carbon dioxide) content. The project uses GE's quench gasification technology because of the synergies with the sour shift process that increases hydrogen production and facilitates high levels of pre-combustion carbon capture (carbon dioxide removal).

GE's quench gasifier design routes the hot gasifier effluent directly into a water bath at the bottom of the gasifier without any high-level heat recovery. Molten gasification solids (slag as defined by GE), comprised of ash and unconverted carbon and other gasification solids as listed in the Gasification Solids section, in the gasifier effluent are solidified in the water bath and removed, and the resultant synthetic gas is scrubbed to remove fine particulates as described in the Syngas Scrubbing section below. Both designs also have similar grinding and slurry preparation systems and gasification solids handling systems. Figure 2-3 (Gasification Process Sketch for Permits) in Appendix D shows a schematic process sketch of GE's quench gasification technology.

Grinding and Slurry Preparation

Feedstock is continuously delivered from feed bins to the grinding mills. Fluxant (crushed aggregate, rock, or sand) is also continuously conveyed from feed bins to the grinding mills, which crush the feedstock, fluxant, and recycled gasifier solids (fine slag/ash and unconverted carbon) with water to form slurry. The slurry is pumped into slurry tanks, which are sized to provide about 8 hours of storage. Since the grinding is done with water, no emissions are assessed to this portion of the operation.

Gasifiers

The proposed quench gasifier is a slurry-fed, pressurized, entrained flow, slagging downflow gasifier, consisting of a refractory-lined pressure vessel capable of withstanding the required gasification process temperature and pressure range. For the gasification reaction, slurry and oxygen are introduced into the gasifier through a specialty equipment item called the feed injector.

All slagging gasifiers require that the mineral matter in the feedstock melt and flow by gravity out the bottom of the gasifier reaction chamber. When using petroleum coke feedstock

and/or coal feedstocks containing ash that melts at high temperatures, the addition of a fluxant is required to achieve the proper molten "gasification solids" flow characteristics at acceptable gasifier operating temperatures, and thus facilitate gravity flow. Both the type and quantity of fluxant required is dependent upon the feedstock characteristics.

The slurry is pumped from the slurry tanks to each gasifier by a slurry charge pump. This high pressure metering pump supplies a steady, controlled flow of slurry to the feed injector. The slurry and a measured amount of high pressure oxygen from the Air Separation Unit (ASU) react in the gasifier reaction chamber at high temperatures to produce syngas. The feedstock is almost totally gasified in this environment to form syngas consisting principally of hydrogen, carbon monoxide, carbon dioxide, and water.

Hot syngas, along with ash, fluxant, and unconverted carbon from the gasifier reaction chamber flow down into the water-filled quench chamber located below the gasifier. The syngas is cooled in this water pool, and exits the quench chamber to be further washed. Molten ash and fluxant are solidified in the water pool. Coarse slag and a portion of the unconverted carbon settle to the bottom of the quench pool, where they enter the coarse slag handling section (as described in the Gasification Solids and Water Handling).

Gasification Solids

The estimated production of gasification solids is estimated to average 140 short tons per day (stpd) (wet) on a plant feedstock of 100% petcoke and is estimated to average 470 stpd (wet) on a plant feedstock of 75% coal/25% petcoke (thermal input HHV basis). The maximum gasification solids production rate is estimated to be 750 stpd (wet). The wide range of production estimates is due to the variability of the feed ratios and the resulting variation in the unreacted carbon content of the solids.

The exact composition of the gasification solids cannot be determined until the project is in operation and typical gasification solids are generated. However, the composition can be projected, based on feed materials. Other operating solid feed gasification plants generate gasification solids for beneficial use. These plants are generally similar to the project, with respect to gasification equipment, process specifications, and feed material blends. For this reason, Table 2-13, Example Composition Range of Gasification Solids, presents a typical range of compositions for the gasification solids. Options for potential uses of the gasifier solids are being evaluated by HECA and include applications in the cement industry, aggregate or road base industry, metal recovery (for vanadium and nickel recovery), and/or blending with petroleum coke to form a saleable solid fuel.

Example Composition Range of Gasification Solids

Compound	Example Weight %, Wet		
	Min	Avg	Max
Vanadium Pentoxide (V2O5)	0.16	1.23	2.68
Nickel Sulfide (NiS)	0.03	0.09	0.23
Nickel (III) Oxide (Ni2O3)	0.00	0.80	1.86
Iron (II) Sulfide (FeS)	0.02	1.22	4.59
Iron (III) Oxide (Fe2O3)	0.00	3.65	7.46
Chromium (III) Oxide (Cr2O3)	0.00	0.02	0.05
Sodium Oxide (Na2O)	0.54	1.21	2.00
Calcium Oxide (CaO)	1.61	2.69	3.71
Mercury (Hg)	0.00	0.00	0.00
Silicon Dioxide (SiO2)	8.97	15.70	21.46
Aluminum Oxide (Al2O3)	2.59	6.26	12.82
Magnesium Oxide (MgO)	0.35	1.00	1.75
Potassium Oxide (K2O)	0.15	0.32	0.51
Titanium Dioxide (TiO2)	0.23	0.55	0.93
Manganese Dioxide (MnO2)	0.00	0.007	0.14
Phosphorus Pentoxide (P2O5)	0.20	0.53	0.91
Strontium Oxide (SrO)	0.00	0.03	0.05
Barium Oxide (BaO)	0.00	0.02	0.05
Sulfur Trioxide (SO3)	0.00	0.00	0.00
Unknowns	0.11	0.50	1.42
Water (H2O)	49.84	52.57	57.93
Carbon (C)	1.42	11.54	25.99

Source: HECA Project

Gasification Solids and Water Handling

Gasification solids (slag as defined by GE) are comprised of ash and unconverted carbon that exit the gasifier. The coarse slag handling section removes coarse solid material from the gasifier. Coarse solid material exiting the bottom of the gasifier quench chamber flows into the lockhopper. After the solids enter the lockhopper, the particles settle to the bottom. The solids that have accumulated in the lockhopper are water-flushed into the slag collection sump, using process water return from the fine slag handling section.

In the slag collection sump, the gasification solids are separated from the water. The gasification solids are washed and the discharged washed low carbon gasification solids are transported by truck off-site for sale or disposal. The fine slag recycle from the slag collection sump is pumped to the fine slag handling section.

Most or all of the settler bottoms are pumped to the grinding and slurry preparation section to recycle fines. Some of the settler bottoms can alternatively be sent to a fine gasification solids filter to produce filter cake, which can be either recycled to the grinding and slurry preparation section or transported by truck off-site for disposal.

Gasifier Refractory Heaters

The applicant proposes three 18.0 MMBtu/hr natural gas-fired gasification refractory heaters to preheat the gasifier refractory prior to startup if starting from cold conditions and also to keep the refractory warm when the gasification train is in hot standby. The combustion products from the gasification refractory heaters are released through vent stacks located on top of the gasifier structures.

Syngas Scrubbing

The syngas from the gasifier enters the syngas scrubber, where solids are removed from the syngas. Raw syngas from the overhead of the syngas scrubber is routed to the downstream sour shift and low-temperature gas-cooling section.

Water condensed from the syngas in the downstream sour shift and low-temperature gas cooling section is returned as process condensate to the syngas scrubber. The syngas scrubber bottoms water contains solids removed from the raw syngas exiting the quench pool.

Sour Shift/Low Temperature Gas Cooling

The Sour Shift/Low Temperature Gas Cooling (LTGC) unit performs several functions:

- Substantially increases the syngas hydrogen content using a 2-stage carbon monoxide shift process
- Cools the shifted syngas by generating steam for additional power production and for internal plant consumption
- Collects hot process condensate formed during the shifted syngas cooling process for recycle to the gasifier syngas scrubbing section
- Collects additional process condensate formed during the shifted syngas cooling process for recycle to Gasification and/or discharge to Sour Water Stripping
- Removes ammonia from the cooled syngas

The carbon monoxide shift process converts water vapor and carbon monoxide to hydrogen and carbon dioxide using the water-gas shift (also known as CO shift) reaction, which can be expressed as follows:

$$CO + H2O \leftrightarrow CO2 + H2 + Heat$$

The reaction is highly exothermic (i.e., releases heat). High reaction rates are favored by high temperatures; however, high conversion is favored by lower temperatures.

In addition to increasing the hydrogen content of the syngas, the CO shift process substantially increases the fraction of carbon present as CO2 in the syngas, and consequently the extent of pre-combustion carbon capture (e.g., as CO2 removal) that can be achieved.

Selection of the CO shift technology is dependent upon whether the process gas is essentially sulfur-free ("sweet") or contains appreciable qualities of sulfur compounds ("sour").

Iron/chrome oxides (at higher temperatures) and copper/zinc oxides (at lower temperatures) are used as catalysts with sulfur-free gas streams, whereas cobalt-molybdenum oxides are used as catalysts if sulfur tolerance is required.

Sulfur-tolerant, sour shift technology was selected for the project because the sour syngas produced by GE's quench gasification process also contains a substantial amount of water vapor, which drives the CO shift reaction to near cornpletion, maximizing the potential for carbon capture. The many synergies between the two technologies yield a simple and cost effective means of achieving high carbon capture with only a single carbon dioxide absorption step. Additionally, the low concentration of carbon monoxide in the shifted syngas allows production of a carbon dioxide by-product gas with a carbon monoxide content of less than 800 parts per million by volume (ppmv). Examples of existing gasification plants with GE's quench gasification and sour shift technology include the Shell Convent Refinery Hydrogen Plant in Louisiana and the Coffeyville Resources Ammonia Plant in Kansas.

The Sour Shift unit for the Project will be designed with two sour shift reactors in series to achieve a residual carbon monoxide concentration in the cooled, shifted syngas of about one volume percent. As a co-benefit, the carbon monoxide shift process will also substantially reduce carbonyls, formates, cyanides, and other impurities in the syngas.

Simplified process flow sketches of the Sour Shift/LTGC unit are included in Figure 2-4 (Flow Diagram Sour Shift System) and Figure 2-5 (Flow Diagram Low Temperature Gas Cooling) in Appendix D. The following discussion provides a brief description of the processing steps in this unit. Scrubbed syngas from the gasification unit is heated against hot reactor effluent and fed to the two sour shift reactors in series. The sour shift catalyst also promotes conversion of most of the carbonyl sulfide (COS) present in the syngas to hydrogen sulfide (H2S) via the following reaction:

$$COS + H_2O \leftrightarrow CO_2 + H_2S$$

The shift reactions are highly exothermic, and the hot syngas is cooled in-between the two shift reactors by feed/effluent exchange and by raising steam for generating additional power and internal plant consumption.

The shifted syngas from the second shift reactor is cooled by generating steam at multiple pressure levels, and by heating boiler feedwater and vacuum condensate to efficiently utilize the available but relatively low-temperature heat. Final cooling of the shifted syngas to near ambient temperature is achieved with air and water coolers.

Water condenses from the shifted syngas as it is cooled. The majority of the ammonia (NH3) and a small portion of the carbon dioxide and hydrogen sulfide present in the syngas are absorbed in this condensed water. A fraction of this process condensate is reheated

against shifted syngas and returned as hot process condensate to the syngas scrubbers in the gasification unit, and the rest is routed to the Sour Water Stripping unit.

The cooled shifted syngas is washed with cold water in a trayed column to remove residual ammonia, and then fed to the Mercury Removal unit.

A simplified process flow sketch of the Mercury Removal System is shown in Figure 2-6 (Flow Diagram Wash Column and Mercury Removal) in Appendix D.

Mercury Removal

Tests of petroleum coke sources show occasional trace levels of mercury in the elemental analyses. Western bituminous coals typically contain trace levels of mercury as well. In order to minimize potential mercury emission, the project has elected to incorporate mercury capture technology. The petroleum coke and coal procurement requires purchase of spot market supplies, effectively limiting the potential for controlling the supplier's processes. However, the mercury capture technology will also ensure that spot market supplies do not introduce mercury emissions.

Downstream of the shift reactors and low-temperature gas cooling, the syngas passes through fixed beds of activated carbon that are prepared with special impregnate additives to remove mercury, if any is present. Multiple beds are used to obtain optimized adsorption. After mercury removal, the product syngas is treated in the Acid Gas Removal (AGR) unit.

Rectisol Acid Gas Removal (AGR) Unit

A Rectisol acid gas removal (AGR) unit removes sulfur components and recovers carbon dioxide. Rectisol is the trade name for an acid gas removal process that uses methanol as a solvent to separate acid gases such as hydrogen sulfide and carbon dioxide from valuable feed gas streams. The Rectisol process is shown in Figure 2-7 (Flow Diagram Rectisol Acid Gas Removal/Fuel Gas Supply Systems) in Appendix D. Shifted, hydrogen-rich sour syngas feed is chilled and enters the pre-wash section of the hydrogen sulfide absorber column where condensed or dissolved impurities are removed. The gas then flows up the column where it is contacted with CO2-laden methanol solvent for absorption of hydrogen sulfide and other sulfur compounds. The solvent preferentially absorbs sulfur while releasing CO2 in the process. The now hydrogen sulfide-laden solvent is withdrawn from the chimney tray of the column and flashed, with the flash gas being recycled to the hydrogen sulfide absorber column and the separated liquid solvent is sent to a hot regenerator.

Overhead gas from the hydrogen sulfide absorber flows to the CO2 absorber where it is contacted with cold regenerated solvent for CO2 removal. The treated hydrogen-rich gas, now very low in hydrogen sulfide and CO2, exits the top of the CO2 absorber and is heated before flowing to a turbo expander for energy conservation. The hydrogen-rich product gas is then heated and used as fuel in the combined cycle power block. Carbon dioxide-laden solvent flows from the bottom of the CO2 absorber column where a portion is diverted to the hydrogen sulfide absorber for hydrogen sulfide removal. The remainder is flashed, with the separated gases recycled to the hydrogen sulfide absorber, and chilled before being routed

to the flash regenerator. In the flash regenerator, absorbed CO2 is removed from the solvent by sequentially decreasing the pressure in multiple steps. Separated carbon dioxide flows to CO2 compression equipment for transportation to the Elk Hills Field for CO2 EOR and sequestration.

Carbon dioxide-free solvent from the bottom of the flash regenerator combines with solvent from the hydrogen sulfide absorber and flows to the hot regenerator where hydrogen sulfide and other sulfur compounds are released from the solvent by increasing the temperature and stripping with methanol vapor generated in a reboiler. The separated acid gas undergoes further processing for recovery of the sulfur. Most of the regenerated, now carbon dioxide-free and hydrogen sulfide-free, solvent is cooled by heat exchange with cool solvent, chilled, and returned to the carbon dioxide absorber for reuse. A small portion of the regenerated solvent and the bottom liquid of the hydrogen sulfide absorber column which contains water from the feed gas are sent to the methanol-water column for separation of dissolved water and impurities from the methanol by distillation. The methanol overhead is retuned to the hot regenerator and the separated column bottoms water is cooled and sent to the gasification area.

Flares (S-7616-3-0, -6-0, and -7-0):

Although the project is designed to avoid flaring during steady state operations, flares are needed to protect the project operators and equipment. The project employs three pressure relief systems and their corresponding flares (gasification, acid gas removal (AGR), and sulfur recovery unit (SRU)) for this purpose. All three flares are conventional pipe flares. The AGR and SRU flares are provided with natural gas assist. Vessels, towers, heat exchangers, and other equipment are connected to piping systems that will discharge gases and vapors to a relief system in order to prevent excessive pressure from building up in the equipment and to allow safe venting of equipment during routine startup, shutdown, or emergency operations.

During normal, non-startup plant operation the three flares will be operated in a standby mode with only de minimis emissions from the natural gas pilot flames. As explained below, two of the flares will be also be used to occasionally dispose of excess startup gases in a safe manner.

Gasification Flare

The gasification block will be provided with a relief system and associated gasification flare to safely dispose of gas streams during gasifier startup, shutdown, and unplanned upsets or emergency events; syngas during AGR startup; hydrogen-rich gas during short-term emergency combustion turbine outages; or other various streams within the project during other unplanned upsets or equipment failures. The power block, shift, and gasification unit vents are collected in a HP flare header. A simplified process flow sketch of the gasification flare system is shown in Figure 2-16 (Flow Diagram Gasification & Rectisol Flare Systems) in Appendix D.

Reduced-pressure sour gas vents from the gasification and shift units during shutdown depressurizing operations are first scrubbed in the gasification amine absorber to remove

essentially all the sour sulfur compounds and then fed to an LP flare header. Both the HP and LP flare headers are routed to a common flare knockout drum to remove condensed moisture and any potentially entrained liquids.

Sulfur Recovery Unit Flare

SRU flare will be used to safely dispose of gas streams containing sulfur during startup and shutdown (as described further in this section) and gas streams containing sulfur during unplanned upsets or emergency events. Acid gas derived from the AGR, gasification unit, and sour water stripper (SWS) overhead is normally routed to the SRU for recovery as elemental sulfur. During cold plant startup of the gasifiers, AGR, and shift units, these acid-gas streams will be diverted to the SRU flare header for a short time. To reduce the emissions of sulfur compounds to the environment during SRU or TGTU shutdown, the acid gas is routed to the emergency caustic scrubber, where the sulfur compounds are absorbed with caustic solution. After scrubbing, the gas is then routed to the elevated SRU flare stack via the SRU flare knockout drum. Fresh and spent caustic tanks and pumps are provided to allow delivery of fresh caustic and disposal of spent caustic. A simplified process flow sketch of the SRU flare system is shown in Figure 2-17 (Flow Diagram SRU Flare System) in Appendix D.

Rectisol Acid Gas Removal Flare

A Rectisol acid gas removal flare will be used as an emergency flare to safely dispose of low temperature gas streams during startup, shutdown, and unplanned upsets or emergency events. Cold reliefs and vents from the AGR unit and its associated refrigeration unit are collected in the Rectisol flare header. The Rectisol flare header is used only in emergencies or upsets and contains gases that can be below the freezing point of water. For this reason the Rectisol flare header gases are segregated from the wet gases in the gasification flare header. A simplified process flow sketch of the Rectisol flare system is shown in Figure 2-16 (Flow Diagram Gasification & Rectisol Flare Systems) in Appendix D.

Cooling Towers (S-7616-4-0, -11-0, and -12-0):

Three mechanical-draft evaporative cooling towers will be used to provide cooling water for the steam turbine surface condenser, gasification block components, and the air separation unit. A 16-celled mechanical draft cooling tower will be installed to perform the required cooling for the CTGs, STG, and associated equipment, a 4-celled mechanical draft cooling tower for both the air separation unit and the gasification block. Each tower has a separate cooling water basin, pumps, and piping system, and operates independently.

All cooling towers are supplied with high-efficiency drift eliminators designed to reduce the maximum drift (the fine mist of water droplets entrained in the warm air leaving the cooling tower) to less than 0.0005 percent of the circulating water flow, thus reducing the resultant PM10 emissions. Circulating water could range up to 9,000 ppm in total dissolved solids (TDS) depending on makeup-water quality and tower operation. Therefore, PM_{10} emissions would vary proportionately. The applicant confirms that no chromium containing compounds will be added to the cooling water.

A chemical feed system will supply water conditioning chemicals to the circulating water to minimize corrosion and control the formation of mineral scale and biofouling. Sulfuric acid will be fed into the circulating water system for alkalinity reduction to control the tendency for scaling. The acid feed system will consist of storage and two full-capacity metering pumps. A polyacrylate solution is also fed into the circulating water system as a sequestering agent to further inhibit scale formation. This system also requires storage and two full-capacity metering pumps. To prevent biofouling in the circulating water system, sodium hypochlorite is added to the system. The system requires storage and two full-capacity metering pumps.

Power Block Cooling Tower

Power cycle heat rejection will consist of a steam surface condenser, cooling tower, and cooling water system. The heat rejection system receives exhaust steam from the low pressure (LP) steam turbine and condenses it to water for reuse. Approximately 175,000 gallons per minute (gpm) of water will be circulated in the power block cooling tower with an hourly circulation rate of 88 million pounds per hour.

The cooling water will circulate through a mechanical draft-cooling tower, which uses electric motor-driven fans to move the air into contact with the flow of the cooling water. The heat removed in the condenser will be discharged to the atmosphere by heating the air and through evaporation of some of the cooling water. Maximum drift, that is, the fine mist of water droplets entrained in the warm air leaving the cooling tower, will be limited to 0.0005 percent of the circulating water flow. Circulating water could range from 3,000 to 9,000 ppm total dissolved solids (TDS) depending on makeup water quality and tower operation. Therefore, PM10 emissions would vary proportionately. For emission calculation purposes, it is assumed that 9,000 ppm TDS are dissolved in the circulating cooling water.

Gasification Block Cooling Tower

The gasification block cooling water system design is similar to the power block, only the duty is substantially lower. The major heat rejection duties are from the carbon dioxide compressor and the AGR refrigeration unit. Cooling water is also supplied to the gasification, Shift/LTGC, SRU, TGTU, SWS units and some other miscellaneous users. Compressor lube oil systems, large motor cooling, and other services that require higher purity cooling water are supplied by the closed circuit cooling water loop.

The gasification cooling tower circulation rate is about 42,300 gpm and the tower is supplied with high efficiency drift eliminators designed to reduce drift to less than 0.0005 percent of circulation.

Air Separation Unit Cooling Tower

The ASU cooling water system design is also similar to the power block and the duty is also substantially lower. The major heat rejection duties are from the main air compressor intercooler and aftercooler, the booster air compressor intercooler, and the nitrogen compressor intercooler. Compressor lube oil systems, large motor cooling, and other services that require higher purity cooling water are supplied by the closed circuit cooling water loop, which rejects heat to the ASU cooling tower. The ASU cooling tower is located

in the ASU unit near the cooling loads. The ASU cooling tower has separate pumps and piping systems and is operated independently of the other cooling water systems.

The ASU cooling tower circulation rate is approximately 40,200 gpm and the tower is supplied with high efficiency drift eliminators designed to reduce drift to less than 0.0005 percent of circulation.

Sulfur Recovery System (S-7616-5-0):

Sulfur Recovery Unit

Sulfur is removed from the processing facility through a sulfur complex which consists of a Claus unit (thermal stage) plus catalytic converters otherwise known as the Sulfur Recovery Unit (SRU), a Tail Gas Treating Unit (TGTU), and a tail gas thermal oxidizer. The sulfur process facility consists of 2 by 50 percent SRUs, 1 by 100 percent TGTU, and 1 by 100 percent thermal oxidizer. The Claus unit and TGTU give an overall sulfur recovery efficiency in the range of 99.8 to 99.9+ percent. The following is a process description of the SRU Claus unit, TGTU, and thermal oxidizer:

Claus Section (CLAUS-TYPE SRU)

The acid gas stream from the Rectisol AGR unit, plus a low concentration acid gas stream from the gasification section and the carbon dioxide/ammonia/hydrogen sulfide stripped from sour water, are fed to two identical, parallel Claus-type SRUs. The total sulfur concentration in the SRU feed (H2S plus COS) from the AGR will be 45 mol % (minimum). Pressure at the boundary limit will be 30 psia (minimum).

In the SRU, the hydrogen sulfide carried in the acid-gas streams is converted to elemental sulfur and water vapor based on the industry-standard Claus process. Each unit consists of a thermal stage and two catalytic reaction stages. The sulfur is selectively condensed and collected in molten form in the sulfur pits. The SRU is designed for both air and oxygen-blown Claus technologies. Figure 2-11 (Flow Diagram Sulfur Recovery Unit) in Appendix D presents a simplified process flow sketch of the SRU.

The Rectisol AGR acid gas and recycle acid gas from the TGTU regenerator enter the SRU through the Acid Gas Wash Drum to remove any liquid from operating upsets of upstream units to protect the Claus reaction furnace and catalyst. Similarly, low concentration acid gas from the gasification section and sour water stripper gas are routed to a Sour Water Stripper (SWS) Acid Gas Knockout Drum, a process which is explained below.

The resulting acid gas streams are preheated using medium-pressure steam; the oxygen feed is pre-heated using medium-pressure stream prior to feeding the reaction furnace. All of the acid gas from the SWS Acid Gas Knockout Drum and the oxygen is sent to the main reaction furnace to ensure complete destruction of ammonia.

One-third of the hydrogen sulfide is combusted with oxygen to produce the proper ratio of hydrogen sulfide and sulfur dioxide, which then react to produce elemental sulfur vapor in a reaction furnace ($2\ H_2S + SO_2 \rightarrow 3\ S + 2\ H_2O$). A waste heat boiler is used to recover

heat before the furnace off-gas is cooled to condense the first increment of sulfur. Gas exiting the first sulfur condenser is fed to a series of heaters, catalytic reaction stages, and sulfur condensers, where the hydrogen sulfide and sulfur dioxide are incrementally converted to elemental sulfur and condensed.

Sulfur Storage

Liquid sulfur from the SRU is collected in two fully-enclosed subsurface sulfur storage pits (SSP). To provide for containment, the SSPs are constructed with structural concrete with a solid roof, built in accordance with applicable laws, ordinances, regulations, and standards. The liquid sulfur drains into the SSP which contain a pump well and Sulfur Transfer Pumps. Sweep air is introduced into the SSP to prevent the accumulation of hydrogen sulfide, and to control fugitive hydrogen sulfide emissions. The sweep air inlet and outlet are located at opposite ends of the SSP to ensure proper sweep of the vapor space. The sweep air is drawn through the SSP and will be routed back to the reaction furnace through the SSP ejector. Liquid sulfur is pumped from sulfur storage to a sulfur degassing unit. The sulfur degassing unit strips dissolved hydrogen sulfide out of the liquid sulfur. The degassed sulfur is routed from the degassing unit to the sulfur storage SSP. The stripped hydrogen sulfide stream is routed to the Claus reaction furnace.

Sulfur loading involves pumping liquid sulfur from the sulfur storage to trucks. The sulfur loading equipment will have vapor recovery systems to control fugitive emissions by returning displaced vapors to the SRU. The SRU is a totally enclosed process with no discharges to the atmosphere.

Tail Gas Treating Unit

A process flow sketch for this unit is shown in Figure 2-12 (Flow Diagram Tail Gas Treating Unit) in Appendix D. The tail gas from the SRU is composed mostly of carbon dioxide, water vapor, and sulfur vapor with trace amounts of hydrogen sulfide, carbonyl sulfide, and sulfur dioxide. The tail gas from both SRU trains is sent to a single TGTU, where it is first preheated using high-pressure steam and then catalytically hydrogenated in the hydrogenation reactor to convert the remaining sulfur species to hydrogen sulfide.

The resulting gas stream is then cooled, washed with caustic for unconverted sulfur dioxide removal, and finally contacted with lean amine in the absorber, where hydrogen sulfide is preferentially absorbed. The rich amine leaving the bottom of the absorber is pumped to the regenerator, where hydrogen sulfide and carbon dioxide are stripped from the amine. Overhead gas from the regenerator containing the separated hydrogen sulfide and carbon dioxide is recycled to the front of the Claus SRU section. The lean solvent from the bottom of the regenerator is cooled and pumped to the absorber.

The treated TGTU vent gas from the absorber overhead contains mostly CO2 and trace levels of sulfur compounds. The treated tail gas is normally compressed, dried, and blended with the much larger product CO2 from the AGR unit. The combined CO2 stream is compressed for transportation to the Elk Hills Field for EOR and sequestration.

Sour Water Stripper (SWS)

The stripped gasses from the SWS containing ammonia, hydrogen sulfide, and carbon dioxide are sent to the Claus unit for sulfur recovery and ammonia destruction. The SWS is shown schematically in Figure 2-13 (Flow Diagram Sour Water Stripper) in Appendix D.

The majority of the SWS feed is produced in the Sour Shift/Low Temperature Gas Cooling unit. Numerous other small sour water streams are collected from within the Project and sent to the SWS feed tank along with the cold condensate from the shifted syngas knockout drums.

The SWS feed pumps, which take suction from the feed tank, deliver sour water to the SWS. The stripper is injected with low pressure steam at the bottom of the column. The rising steam strips ammonia, carbon dioxide, and hydrogen sulfide out of the sour water. The overhead vapors are cooled in an air-cooler condenser. The condensate is refluxed back to the column and the overhead non-condensable gases are sent to the Claus unit. The stripped condensate is drawn off the bottom of the column and pumped to the Gasification Block for reuse.

Tail Gas Thermal Oxidizer

Associated with the operation of the sulfur recovery process is the integral use of a thermal oxidizer as a control device to provide for the safe and efficient destruction of the hydrogen sulfide contained in the TGTU vent gas during startup and shutdown. The miscellaneous oxidizing streams from the gasification area (e.g., atmospheric tank vents and miscellaneous equipment vents) are directed to the thermal oxidizer during normal operation to prevent nuisance odors.

In the thermal oxidizer, the TGTU tail gas and other oxidizing streams are subjected to a high temperature and a sufficient residence time to cause an essentially complete destruction of reduced sulfur compounds such as hydrogen sulfide. The thermal oxidizer uses natural gas to reach the necessary operating temperature for optimal thermal destruction.

<u>CO2 Recovery and Vent System (S-7616-8-0):</u>

CO2 Recovery (Capture, Compression, and Transportation) System

As stated earlier, under normal operation the CO2 injection (capture, compression, and transportation) system and pipeline will be utilized to dispose of the CO2 stream. At least 90 percent of the carbon in the raw syngas production will be captured, resulting in a high purity CO2 stream during steady-state operation. The CO2 will be transported by pipeline to the custody transfer point to Occidental of Elk Hills' (Oxy) Elk Hills Field for CO2 EOR and sequestration. The CO2 recovery is shown in the Carbon Dioxide Compression and Venting Systems Flow Diagram in Appendix D.

In order for the CO2 to be transported, it must first be compressed. The CO2 that will be compressed comes from two sources: (1) the bulk of the CO2 comes from the acid gas

removal (AGR) unit; and (2) a small portion comes from the tail gas treating unit (TGTU) absorber. After processing by the AGR unit, the CO2 is very dry, which avoids pipeline and equipment corrosion.

The AGR unit produces high purity CO2 at two pressure levels: (1) the lower pressure level is near atmospheric pressure; and (2) the higher pressure CO2 is available at about three atmospheres. The TGTU CO2 stream is near atmospheric pressure and contains moisture, so it must be compressed to the just above the higher CO2 pressure from the AGR unit, dried, and then combined with the higher CO2 pressure stream from the AGR unit.

The maximum working pressure of the CO2 pipeline is about 2,800 psig at the compressor discharge. Once the CO2 pressure reaches approximately about 1,200 psig it becomes super-critical[1]. The significance of this is that at high pressures the CO2 exists as a dense single phase. Heating or cooling the fluid will change its density, but it will not develop into a separate liquid phase. So while the compression to high pressure is needed for CO2 injection operations, it is also needed to keep the CO2 in a supercritical phase throughout the CO2 pipeline. Multi-stage centrifugal compressors have been selected for this project. The compressors are inter-cooled between stages and provided with inlet guide vane capacity controls.

The captured and compressed CO2 will be transported by pipeline at a pressure greater than 1,500 psig, but no greater than 2,800 psig. The stream will be approximately 97% pure CO2. The pipeline facilities will consist of a pipeline 12 inches in diameter, one metering facility at the pipeline origin and terminus/custody transfer point, one pig launcher, one pig receiver, cathodic protection system, two main block valves and two additional emergency shutdown valves, as specified by the California State Fire Marshal.

CO2 Vent System

The applicant proposes a vent system consisting of a stack that will provide an alternative operating scenario for releasing the produced CO2 and the small amounts of CO, VOC, and H_2S when the exhaust compression, pipeline, and injection system is unavailable. Venting will enable the facility to operate rather than to be disabled by brief periods when the CO2 injection system is unavailable, and in doing so, prevents gasifier shutdown and subsequent gasifier restart with associated emissions.

The ability to vent CO2 is required initially to prevent over-pressurization and potential adverse safety consequences. The capability to vent CO2 after an interruption has been diagnosed but before corrective measures are implemented is based on a trade-off of the emissions associated with CO2 venting versus the emissions associated with a shutdown followed by a startup. The gasification block requires about 150 hours for startup and involves flaring. Eliminating unnecessary shutdowns and subsequent startups is one of the major benefits of utilizing the CO2 vent.

[1] Super-critical refers to a material at a temperature and pressure above its critical temperature pressure. At these conditions there is no defined phase difference between liquid and vapor.

The project design indicates that the CO2 vent stack will be located beyond the downwash zones caused by the structures associated with the project. The proposed height of the CO2 vent stack of 260 feet (79.3 meters) is greater than the de-minimus good engineering practice height of 65 meters as is explained in the Emission Control Technology Evaluation section of this document. A 260-foot stack height was chosen to satisfy the safe design practices to minimize ground-level CO2 concentrations in the event of a CO2 vent under very low wind speeds.

The CO2 vent stream will be vented at approximately 656,000 pounds per hour. Stack parameters and CO, VOC, and H_2S emission rates are summarized in the table below:

Model Inputs and Parameters:

Max Value at Exit of Stack	**100% Flow**
Molecular weight of vent gas	44.0
Flow (lb/hr)	656,000
Flow (kg/s)	82.656
Temperature (F)	65
Temperature (K)	291.6
Stack diameter (in)	42
Stack diameter (m)	1.067
Stack height (ft)	260
Stack height (m)	79.3
H2S concentration (ppm)	10
H2S emission rate (lb/hr)	5.15
VOC concentration (ppm)	40
VOC emission rate (lb/hr)	9.70
CO concentration (ppm)	1,000
CO emission rate (lb/hr)	424.2
Stability class	D
Wind speed, meters	1

Source: HECA Project

The duration for venting is estimated at 504 hours/year based on the composite of the individual estimates of the reliability of the components involved. The 504 hours (21 days) are based on the following types of events that require venting CO2 and could occur over any 1-year period. These events include: (A) gasification block cold startups; (B) unplanned outages of the CO2 compressor; (C) unplanned outages of the CO2 pipeline; and (D) CO2 off-taker unable to accept. The scenarios shown in the table below conservatively estimate the venting that may be required during the early operation and during mature operation:

Scenario for Early Operation				
	Event	**Events per Year**	**Duration of Time to Repair (Days per Event)**	**Days per Year of CO2 Vent Operation (1)**
A	Cold Gasification Block Startup	6	1	6
B	CO2 Compressor Unplanned Outage	4	2	8
C	CO2 Pipeline Unplanned Outage	1	1	1
D	CO2 Off-Taker Unable to Accept	2	3	6
Total Days				21
Scenario for Mature Operation				
	Event	**Events per Year**	**Duration of Time to Repair (Days per Event)**	**Days per Year of CO2 Vent Operation (1)**
A	Cold Gasification Block Startup	1	1	1
B	CO2 Compressor Unplanned Outage	2 to 4	2	4 to 8
C	CO2 Pipeline Unplanned Outage	0 to 1	1	0 to 1
D	CO2 Off-Taker Unable to Accept	0	0	0
Total Days				5 to 10

Note:
1 The flow rate of CO_2 during venting will vary depending on the number of gasifiers operating and the syngas/hydrogen-rich fuel production rate. Venting during a cold Gasification Block startup is expected to be less than one-half on the maximum CO_2 production.

Natural Gas-Fired Auxiliary Boiler (S-7616-13-0):

The auxiliary boiler is a pre-engineered package boiler that will provide steam for pre-startup equipment warm-up to facilitate the CTG startup and for other miscellaneous purposes when steam from the gasification process or HRSG is not available. The auxiliary boiler will be designed to burn a single fuel (pipeline-quality natural gas) at the design maximum fuel flow rate of 142 MMBtu/hr HHV. During normal operation, the auxiliary boiler may be kept in warm standby (steam sparged, no firing) or cold standby (no sparging), and will not have emissions. The boiler will produce a maximum of about 100,000 pounds per hour of steam and will be fueled only by pipeline natural gas. The boiler will be equipped with low NOx burners and flue gas recirculation to minimize emissions.

The auxiliary boiler will be equipped with ultra-low NOx combustors and will have an estimated annual capacity of 25 percent. The auxiliary boiler emissions are based on 2,190 hours of operation per year.

Diesel-Fired Emergency Engines Powering Electrical Generators (S-7616-14 and -15):

Diesel Generator

The emergency engine powers an electrical generator. Other than emergency operation, the engine may be operated up to 50 hours per year for maintenance and testing purposes (as allowed by Rule 4702).

Two 60 Hz, 3-Phase, 2,000 kW, 0.8 PF standby diesel generators in an outdoor enclosure will be connected to the 480 V switchgear to supply emergency essential service power to

critical lube oil and cooling pumps, gasification and auxiliary steam systems, gasification quench system, station battery chargers, UPS, heat tracing, control room, and emergency exit lighting, and other critical plant loads.

A Local Control Panel (LCP) will be located on base with standard microprocessor-based engine and generator controls, interlocks, metering, alarms, and synchronizing system. Remote control of the diesel generator shall be from DCS operators via a fiber optic cable to Sellers control system.

Diesel-fired Emergency Engine Powering Firewater Pump (S-7616-16):

The emergency engine powers a firewater pump. Other than emergency operation, the engine may be operated up to 100 hours per year for maintenance and testing purposes (as allowed by Rule 4702).

V. Equipment Listing

S-7616-1-0	FEEDSTOCK HANDLING AND STORAGE SYSTEM, INCLUDING A SERIES OF ENCLOSED CONVEYERS, WITH TRUCK UNLOADING BUILDING, FEEDSTOCK STORAGE SILOS, CRUSHER, COAL/COKE FEED BIN, GRINDING MILL, SLURRY PREPARATION SYSTEM, SERVED BY DUST COLLECTION SYSTEM CONSISTING OF HOODS AND BAGHOUSES
S-7616-2-0	GASIFICATION SYSTEM INCLUDING THREE GE QUENCH GASIFIERS (TWO MAIN AND ONE SPARE) SERVED BY THREE 18 MMBTU/HR NATURAL GAS-FIRED REFRACTORY HEATERS; SYNGAS SCRUBBING SYSTEM; SOUR SHIFT/LOW TEMPERATURE GAS COOLING (LTGC) SYSTEM; AND A RECTISOL ACID GAS REMOVAL (AGR) UNIT
S-7616-3-0	1695 MMBTU/HR ELEVATED FLARE WITH 0.5 MMBTU/HR NATURAL GAS-FIRED PILOT PRIMARILY SERVING GASIFICATION BLOCK
S-7616-4-0	42,300 GALLONS PER MINUTE MULTI-CELL MECHANICAL-DRAFT COOLING TOWER WITH HIGH-EFFICIENCY DRIFT ELIMINATORS, SERVING GASIFICATION PROCESS AREA
S-7616-5-0	SULFUR RECOVERY SYSTEM CONSISTING OF SULFUR RECOVERY UNIT (SRU), A TAIL GAS TREATING UNIT (TGTU), AND A 10 MMBTU/HR NATURAL GAS-FIRED TAIL GAS THERMAL OXIDIZER, AND MISCELLANEOUS TANKS, COMPRESSORS, PUMPS, CONDENSERS, HEAT EXCHANGERS, PIPING
S-7616-6-0	36 MMBTU/HR NATURAL GAS ASSIST ELEVATED FLARE WITH 0.3 MMBTU/HR NATURAL GAS FIRED PILOT, SERVING SULFUR RECOVERY UNIT

S-7616-7-0	150 MMBTU/HR EMERGENCY ELEVATED FLARE WITH 0.3 MMBTU/HR NATURAL GAS-FIRED PILOT PRIMARILY SERVING RECTISOL ACID GAS REMOVAL UNIT
S-7616-8-0	CO2 RECOVERY (CAPTURE, COMPRESSION, AND TRANSPORTATION) AND VENT SYSTEM, SERVING RELEASE A STREAM CONSISTING OF CO2 AND OTHER POLLUTANTS FROM THE ACID GAS REMOVAL UNIT AND TAIL GAS TREATMENT UNIT
S-7616-9-0	349 MW (GROSS) COMBINED-CYCLE POWER GENERATING SYSTEM CONSISTING OF HYDROGEN-RICH SYNGAS FUEL AND/OR NATURAL GAS-FIRED GE PG7321 (FB) COMBINED-CYCLE COMBUSTION TURBINE GENERATOR (CTG) WITH A HEAT RECOVERY STEAM GENERATOR (HRSG) WHICH INCLUDES A DUCT BURNER, SELECTIVE CATALYTIC REDUCTION (SCR) SYSTEM, CARBON MONOXIDE CATALYST SYSTEM; AND A CONDENSING STEAM TURBINE-GENERATOR (STG) OPERATING IN COMBINED CYCLE MODE
S-7616-11-0	40,200 GALLONS PER MINUTE MULTI-CELL MECHANICAL-DRAFT COOLING TOWER WITH HIGH-EFFICIENCY DRIFT ELIMINATORS, SERVING AIR SEPARATION UNIT
S-7616-12-0	175,000 GALLONS PER MINUTE MULTI-CELL MECHANICAL DRAFT COOLING TOWER WITH HIGH-EFFICIENCY DRIFT ELIMINATORS, SERVING POWER BLOCK
S-7616-13-0	142 MMBTU/HR NBC MODEL NS-F-70-ECON NATURAL GAS FIRED AUXILIARY BOILER EQUIPPED WITH TODD COMBUSTION LOW NOX BURNERS AND FLUE GAS RECIRCULATION (OR EQUIVALENT)
S-7616-14-0	2,922 BHP CUMMINS MODEL QSK60-G6 TIER 4 CERTIFIED DIESEL-FIRED EMERGENCY STANDBY IC ENGINE POWERING A 2,000 KW CUMMINS MODEL DQKC ELECTRIC GENERATOR, #1 (OR EQUIVALENT)
S-7616-15-0	2,922 BHP CUMMINS MODEL QSK60-G6 TIER 4 CERTIFIED DIESEL-FIRED EMERGENCY STANDBY IC ENGINE POWERING A 2,000 KW CUMMINS MODEL DQKC ELECTRIC GENERATOR, #2 (OR EQUIVALENT)
S-7616-16-0	556 BHP CUMMINS MODEL CFP-15E-F40 TIER 4 CERTIFIED DIESEL-FIRED EMERGENCY STANDBY IC ENGINE POWERING A FIREWATER PUMP (OR EQUIVALENT)

VI. Emission Control Technology Evaluation

Combined Cycle Combustion Turbine Generator (S-7616-9-0):

The most significant emission source of the project will be the CTG/HRSG train. The power block design will be optimized for performance on 100 percent hydrogen-rich fuel, 100 percent natural gas, or co-firing hydrogen-rich fuel and natural gas. Most of the hydrogen-rich syngas from the gasification plant will be used to fully load the CTG, with any excess (up to about 10 to 14%) duct fired in the HRSG. The CTG will operate on hydrogen-rich fuel, natural gas, or a mixture of the two (45% to 90% hydrogen-rich syngas) over the compliance load range of 60 to 100 percent. The CTG will be co-fired with natural gas as required to maintain baseload operation whenever the quantity of hydrogen-rich fuel is insufficient.

Maximum short-term operational emissions from the CTG/HRSG were determined from a comparative evaluation of potential emissions corresponding to normal operating conditions (including HRSG duct-firing), and CTG startup/shutdown conditions. The long-term operational emissions from the CTG/HRSG were estimated by summing the emissions contributions from normal operating conditions (including hours with and without duct-firing) and CTG/HRSG startup/shutdown conditions. Estimated annual emissions of air pollutants for the CTG/HRSG have been calculated based on the expected operating schedule for the CTG/HRSG presented below in Table 4-2, Maximum CTG/HRSG Operating Schedule.

Operational emissions from the CTG/HRSG were estimated for all applicable scenarios using base emission rates and startup/shutdown emissions. The base criteria pollutant emission rates provided by the turbine vendor and the engineer for three load conditions (60%, 80%, and 100%) and three ambient temperatures (20°F, 65°F, and 97°F) when firing natural gas, syngas, or cofiring are presented in Table 4-3, 1-Hour Operating Emission Rates for CTG/HRSG Operating Load Scenarios.

Emissions Controls Systems

The project's emissions control systems will be designed to meet the BACT levels of nitrogen oxides, carbon monoxide, sulfur dioxide, and volatile organic compounds (VOCs), as proposed in this application, based on the most current industry data and manufacturers' information. Project emission control systems are described in detail below.

SCR Emissions Control System

The SCR system reduces nitrogen oxide emissions from the HRSG stack gases by up to about 83 percent. Diluted 19 percent aqueous ammonia is injected into the stack gases upstream of a catalytic system which converts nitrogen oxide and ammonia to nitrogen and water.

The expected components in the SCR system are as follows:

Aqueous Ammonia Storage Tank – The aqueous ammonia storage tank is a horizontal or vertical vessel which stores 16,000 gallons of 19 weight percent aqueous ammonia for the SCR system.

The storage tank will be complete with relief valves, level gauges, local audio alarms, and will also be located inside a containment area.
Aqueous Ammonia Forwarding Pumps – The aqueous ammonia forwarding pumps will transfer aqueous ammonia from the storage tank to the aqueous ammonia vaporizer.

Ammonia Vaporizer – The aqueous ammonia vaporizer atomizes and vaporizes the ammonia and water solution. Plant air or steam will atomize the aqueous ammonia to assist in the vaporization. The energy to vaporize the aqueous ammonia will come from a slip stream of hot stack gas or by heating ambient air with a heating element.

Vaporizer Blower – The vaporizer blower delivers fresh air or recycled hot stack gas from the HRSG into the aqueous ammonia vaporizer.

Ammonia Injection Grid – Once the aqueous ammonia is properly vaporized, the ammonia is sent to an injection grid where the ammonia stream is divided into various injection points upstream of a catalyst. The flow of ammonia to each injection point can be balanced to provide optimum nitrogen oxide reduction.

SCR Catalyst – The SCR catalyst provides the surface area and the catalyst to react ammonia and nitrogen oxide to form nitrogen and water. The SCR catalyst will be installed in a reactor housing located within the HRSG at the proper flue gas temperature-point for good nitrogen oxide conversion.

CO Oxidation System

A carbon monoxide catalyst will be installed in the HRSG casing upstream of the SCR ammonia injection location to reduce carbon monoxide emissions. The carbon monoxide catalyst will oxidize the carbon monoxide and VOCs produced from the CTG.

Continuous Emissions Monitoring System

The Continuous Emissions Monitoring System (CEMS) records the emissions out of the HRSG stack to comply with local, state, and federal emission requirements. The CEMS monitors the nitrogen oxide, oxygen, and carbon monoxide levels. It uses control system signals for CTG power output and fuel gas to the CTG to calculate the total mass rate of emissions released, and may also be used as part of the ammonia injection controls for the SCR system. The CEMS will be designed, installed, and certified in accordance with the applicable SJVAPCD and USEPA standards for analyzer performance, data acquisition, and data reporting.

Maximum Combustion Turbine Generator (CTG)/Heat Recovery Steam Generator (HRSG) Operating Schedule (Operating Conditions Annual Numbers)

Operating Conditions	Annual Numbers
Total Hours of Operation	8,322
Total Number of Cold Starts	10
Cold Start Duration (hr)	3
Total Number of Hot Starts	10
Hot Start Duration (hr)	1
Total Number of Shutdowns	20
Shutdown Duration (hr)	0.5
Duct Burner Operation (hr)	8,272

Source: HECA Project

Feedstock Handling and Storage System (S-7616-1-0):

The feedstock and gasifier solids materials handling operations will result in PM10 emissions. These operations include bulk material unloading, loading, belt conveying, belt transfer points, silo loading, and reclaim.

A simplified process flow diagram of the Feedstock, Handling, and Storage system is shown in Flow Diagram Feedstock Handling and Storage in Appendix D. This operation will consist of the following emissions units, each served by their own dust collection system consisting of hoods and baghouses.

Truck Feedstock Unloading:	DC-1
Feedstock (Coke/Coal) Storage Silos (filling):	DC-2
Mass Flow Bins (in/out):	DC-3
Coke/Coal Silos (loadout):	DC-4
Grinder/Crusher:	DC-5
Fluxant Bins (filling):	DC-6

A description of this operation is found in the Process Description of this evaluation.

Gasification System (S-7616-2-0):

Gasification Technology Selection

As part of the design evaluation, both of GE Energy's gasification design technologies (radiant and quench) were evaluated. Although GE considers the radiant design to be the preferred choice for IGCC power plants that do not require high levels of carbon capture, quench gasification technology was identified as the best fit to meet the specific requirements of the proposed project, when taking into account key decision criteria including the lifecycle cost of electricity and reducing technology risk through demonstrated commercial operation with similar (petcoke and coal) feedstocks, at similar capacity and operating conditions. Additionally, the synergies with the sour shift process that increases hydrogen production and facilitates high levels of pre-combustion carbon capture (carbon dioxide removal) are better supported with the quench design, which is simpler and has

been applied widely in syngas generation for chemical production, particularly where sour shift is used to increase syngas hydrogen (and carbon dioxide) content.

GE's quench gasifier design routes the hot gasifier effluent directly into a water bath at the bottom of the gasifier without any high-level heat recovery. Molten gasification solids (slag as defined by GE), comprised of ash, unconverted carbon and other gasification solids in the gasifier effluent that are solidified in the water bath and removed, and the resultant synthetic gas is scrubbed to remove fine particulates. Both designs also have similar grinding and slurry preparation systems and gasification solids handling systems.

The proposed quench gasifier is a slurry-fed, pressurized, entrained flow, slagging downflow gasifier, consisting of a refractory-lined pressure vessel capable of withstanding the required gasification process temperature and pressure range.

Gasifier Refractory Heaters

The gasifier vessels are refractory lined and require about one to two days to heat up to a temperature of 2,500 degrees F to allow O2 and the feedstock to be introduced. Each of the three gasifiers will be served by one 18 MMBtu/hr natural gas-fired gasification refractory heater burner that will help cure and preheat the gasifier refractory prior to cold startup or to keep the refractory warm when the gasification train is in hot standby. The combustion products from the gasification refractory heaters are released through vent stacks located on top of the gasifier structures.

In order to heat the refractory to the required 2,500 degrees F to allow O2 and the feedstock to be introduced, up to a flame temperature of 3,000 degrees F is necessary during the final portion of the heat-up period or when holding the gasifier in the high-temperature range. It may be necessary to hold at the high temperature range for somewhat longer periods, perhaps two or three days, if a gasifier startup is delayed due to a temporary upset in another piece of equipment. Holding at the higher temperature range avoids repeating most or all of the heat-up cycle when the problem is fixed.

Gasifiers

The proposed quench gasifier is a slurry-fed, pressurized, entrained flow, slagging downflow gasifier, consisting of a refractory-lined pressure vessel capable of withstanding the required gasification process temperature and pressure range. The gasifier vessels are refractory lined and require about 1 to 2 days to heat up to the temperature of 3,000 degree F that allows O2 and the feedstock to be introduced. For the gasification reaction, slurry and oxygen are introduced into the gasifier through the feed injector. The slurry consists of ground feedstock, fluxant (which is crushed aggregate, rock, or sand), recycled gasifier solid (which is fine slag/ash and unconverted carbon), which is pumped from slurry tanks (equipment which will be listed on S-7616-1).

All slagging gasifiers require that the mineral matter in the feedstock melt and flow by gravity out the bottom of the gasifier reaction chamber. When using petroleum coke feedstock and/or coal feedstocks containing ash that melts at high temperatures, the addition of a fluxant is required to achieve the proper molten "gasification solids" flow characteristics at

acceptable gasifier operating temperatures, and thus facilitate gravity flow. Both the type and quantity of fluxant required is dependent upon the feedstock characteristics.

The slurry is pumped from the slurry tanks to each gasifier by a slurry charge pump. This high pressure metering pump supplies a steady, controlled flow of slurry to the feed injector. The slurry and a measured amount of high pressure oxygen from the Air Separation Unit (ASU) react in the gasifier reaction chamber at high temperatures to produce syngas. The feedstock is almost totally gasified in this environment to form syngas consisting principally of hydrogen, carbon monoxide, carbon dioxide, and water. The syngas will be processed downstream undergoing syngas scrubbing, sour shift, low-temperature gas cooling, and mercury removal processes, all of which are explained in further detail in the Determination of Compliance evaluation.

Hot syngas, along with ash, fluxant, and unconverted carbon from the gasifier reaction chamber flow down into the water-filled quench chamber located below the gasifier. The syngas is cooled in this water pool, and exits the quench chamber to be further washed. Molten ash and fluxant are solidified in the water pool. Coarse slag and a portion of the unconverted carbon settle to the bottom of the quench pool, where they enter the coarse slag handling section as described in the Determination of Compliance evaluation.

Flares (S-7616-3-0, -6-0, and -7-0):

The Project will incorporate three flares for operation; gasification flare, SRU flare, and Rectisol AGR flare. The gasification block will operate a gasification flare to safely dispose of gasifier startup gases (see previous discussion) and syngas, generated during short-term combustion turbine outages and other unplanned power plant upsets or equipment failures. In addition, there will be an SRU flare installed to safely dispose of gas emissions from the AGR source during startup (after passing via a scrubber) or to oxidize releases during emergency or upset events. The Rectisol AGR flare will be used as an emergency flare to safely dispose of low temperature gas streams during startup, shutdown, and unplanned upsets or emergency events. Being designated an emergency flare, the Rectisol AGR flare will be limited to 200 hr/yr of non-emergency operation.

During normal operation, the three flares will have pilot lights that will operate continuously. Emissions from the flares are generated from the continual operation of the natural gas fired pilot lights and from periodic vent gas that are oxidized during unsteady state operation of the gasification and power blocks.

Cooling Towers (S-7616-4-0, -11-0, and -12-0):

Power Block Cooling Tower

Power cycle heat rejection will consist of a steam surface condenser, cooling tower, and cooling water system. The heat rejection system receives exhaust steam from the low pressure (LP) steam turbine and condenses it to water for reuse. Approximately 175,000 gallons per minute (gpm) of water will be circulated in the power block cooling tower with an hourly circulation rate of 88 million pounds per hour.

The cooling water will circulate through a mechanical draft-cooling tower, which uses electric motor-driven fans to move the air into contact with the flow of the cooling water. The heat removed in the condenser will be discharged to the atmosphere by heating the air and through evaporation of some of the cooling water. Maximum drift, that is, the fine mist of water droplets entrained in the warm air leaving the cooling tower, will be limited to 0.0005 percent of the circulating water flow. Circulating water could range from 3,000 to 9,000 ppm total dissolved solids (TDS) depending on makeup water quality and tower operation. Therefore, PM10 emissions would vary proportionately. For emission calculation purposes, it is assumed that 9,000 ppm TDS are dissolved in the circulating cooling water.

ASU and Gasification Cooling Towers

The ASU and gasification block cooling water system designs are similar to the power block cooling design, but they have substantially lower duties. The ASU cooling tower is located in the ASU unit near the cooling loads. The ASU cooling tower has separate pumps and piping systems and is operated independently of the other cooling water systems. The ASU cooling tower circulation rate is approximately 40,200 gpm and the tower is supplied with high efficiency drift eliminators designed to reduce drift to less than 0.0005 percent of circulation.

The gasification unit cooling tower is co-located with the power block cooling tower. Each tower has a separate cooling water basin, pumps, and piping system, and operates independently. The gasification cooling tower circulation rate is about 42,300 gpm and the tower is supplied with high efficiency drift eliminators designed to reduce drift to less than 0.0005 percent of circulation.

Sulfur Recovery System (S-7616-5-0):

Sulfur is removed from the processing facility through a sulfur complex which consists of a Claus unit (thermal stage) plus catalytic converters otherwise known as the Sulfur Recovery unit (SRU), a Tail Gas Treating Unit (TGTU), and a tail gas thermal oxidizer. The sulfur process facility consists of 2 by 50 percent SRUs, 1 by 100 percent TGTU, and 1 by 100 percent thermal oxidizer. The Claus unit and TGTU give an overall sulfur recovery efficiency in the range of 99.8 to 99.9+ percent.

Associated with the operation of the sulfur recovery process, the project will incorporate a thermal oxidizer on the tail gas treating unit (TGTU). The thermal oxidizer will serve as a control device to oxidize any remaining H2S (after scrubbing) and other vent gas that are generated during startup, shutdown, and times of non-delivery of carbon dioxide product. In addition, miscellaneous oxidizing streams from the gasification area (e.g., atmospheric tank vents and miscellaneous equipment vents) are directed to the thermal oxidizer during normal operation to prevent nuisance odors. The thermal oxidizer operates at high temperate and provides sufficient residence time in order to ensure essentially complete destruction of reduced sulfur compounds like H2S to SO2. The thermal oxidizer fires natural gas continually to reach and maintain the required operating temperature for proper thermal destruction. Pollutant emissions are generated from the firing of natural gas and the periodic oxidation of vent gas during system upset.

CO2 Recovery and Vent System (S-7616-8-0):

Under normal operation the CO2 injection (capture, compression, and transportation) system and pipeline will be utilized to dispose of the CO2 stream. At least 90 percent of the carbon in the raw syngas production will be captured, resulting in a high purity CO2 stream during steady-state operation. The CO2 will be transported by pipeline to the custody transfer point to Occidental of Elk Hills' (Oxy) Elk Hills Field for CO2 EOR and sequestration. The CO2 recovery is shown in the Carbon Dioxide Compression and Venting Systems Flow Diagram in Appendix D.

CO2 Vent System

The applicant proposes a vent system consisting of a stack that will provide an alternative operating scenario for releasing the produced CO2 and the small amounts of CO, VOC, and H_2S when the exhaust compression, pipeline, and injection system is unavailable. Venting will enable the facility to operate rather than to be disabled by brief periods when the CO2 injection system is unavailable, and in doing so, prevents gasifier shutdown and subsequent gasifier restart with associated emissions.

The ability to vent CO2 is required initially to prevent over-pressurization and potential adverse safety consequences. The capability to vent CO2 after an interruption has been diagnosed but before corrective measures are implemented is based on a trade-off of the emissions associated with CO2 venting versus the emissions associated with a shutdown followed by a startup. The gasification block requires about 150 hours for startup and involves flaring. Eliminating unnecessary shutdowns and subsequent startups is one of the major benefits of utilizing the CO2 vent.

The project design indicates that the CO2 vent stack will be located beyond the downwash zones caused by the structures associated with the project. The proposed height of the CO2 vent stack of 260 feet (79.3 meters) is greater than the de-minimus good engineering practice height of 65 meters as is explained in the Emission Control Technology Evaluation section of this document. A 260-foot stack height was chosen to satisfy the safe design practices to minimize ground-level CO2 concentrations in the event of a CO2 vent under very low wind speeds.

The CO2 vent stream will be vented at approximately 656,000 pounds per hour. Stack parameters and CO, VOC, and H_2S emission rates are summarized in the table below:

Model Inputs and Parameters

Max Value at Exit of Stack	**100% Flow**
Molecular Weight of vent gas	44.0
Flow, pounds/hour	656,000
Flow, kilograms/second	82.656
Temp, F	65
Temp, K	291.6
Stack diameter, inches	42
Stack diameter, meters	1.067

Stack height, feet	260
Stack height, meters	79.3
H2S Concentration (ppm)	10
H2S Emission Rate (lb/hr)	5.15
VOC Concentration (ppm)	40
VOC Emission Rate (lb/hr)	9.70
CO Concentration (ppm)	1,000
CO Emission Rate (lb/hr)	424.2
Stability Class	D
Wind speed, meters	1

Source: HECA Project

The duration for venting is estimated at 504 hours/year based on the composite of the individual estimates of the reliability of the components involved. The 504 hours (21 days) are based on the following types of events that require venting CO2 and could occur over any 1-year period. These events include: (A) gasification block cold startups; (B) unplanned outages of the CO2 compressor; (C) unplanned outages of the CO2 pipeline; and (D) CO2 off-taker unable to accept. The scenarios shown in the table below conservatively estimate the venting that may be required during the early operation and during mature operation:

Scenario for Early Operation				
	Event	**Events per Year**	**Duration of Time to Repair (Days per Event)**	**Days per Year of CO2 Vent Operation (1)**
A	Cold Gasification Block Startup	6	1	6
B	CO2 Compressor Unplanned Outage	4	2	8
C	CO2 Pipeline Unplanned Outage	1	1	1
D	CO2 Off-Taker Unable to Accept	2	3	6
Total Days				21
Scenario for Mature Operation				
	Event	**Events per Year**	**Duration of Time to Repair (Days per Event)**	**Days per Year of CO2 Vent Operation (1)**
A	Cold Gasification Block Startup	1	1	1
B	CO2 Compressor Unplanned Outage	2 to 4	2	4 to 8
C	CO2 Pipeline Unplanned Outage	0 to 1	1	0 to 1
D	CO2 Off-Taker Unable to Accept	0	0	0
Total Days				5 to 10

Note:
1 The flow rate of CO_2 during venting will vary depending on the number of gasifiers operating and the syngas/hydrogen-rich fuel production rate. Venting during a cold Gasification Block startup is expected to be less than one-half on the maximum CO_2 production.

Natural-Gas Fired Auxiliary Boiler (S-7616-13-0):

The auxiliary boiler will provide steam to facilitate CTG startup and for other industrial purposes. The auxiliary boiler will be designed to burn pipeline-quality natural gas at the design maximum fuel flow rate of 142 MMBtu/hour (higher heating value [HHV]). The auxiliary boiler emissions are based on 2,190 hours of operation per year. Emissions are based on vendor supplied emission factors. NO_x emissions are based on 5 parts per million volumetric dry (ppmvd) at 3 percent O_2 with installation of ultra-low NO_x combustors and flue gas recirculation. Carbon monoxide emissions are based on 50 ppmvd 3 percent O_2.

Diesel-Fired Emergency Engines Powering Electrical Generators (S-7616-14 and -15):

The engines will be equipped with:
- [X] Turbocharger
- [X] Intercooler/aftercooler
- [ ] Injection timing retard (or equivalent per District Policy SSP-1805, dated 8/14/1996)
- [ ] Positive Crankcase Ventilation (PCV) or 90% efficient control device
- [ ] This engine is required to be, and is UL certified
- [ ] Catalytic particulate filter
- [X] Very Low (0.0015%) sulfur diesel

The emission control devices/technologies and their effect on diesel engine emissions detailed below are from *Non-catalytic NO_X Control of Stationary Diesel Engines*, by Don Koeberlein, CARB.

The turbocharger reduces the NO_X emission rate from the engine by approximately 10% by increasing the efficiency and promoting more complete burning of the fuel.

The intercooler/aftercooler functions in conjunction with the turbocharger to reduce the inlet air temperature. By reducing the inlet air temperature, the peak combustion temperature is lowered, which reduces the formation of thermal NO_X. NO_X emissions are reduced by approximately 15% with this control technology.

The use of very low-sulfur diesel fuel (0.0015% by weight sulfur maximum) reduces SO_X emissions by over 99% from standard diesel fuel.

Diesel-Fired Emergency Engine Powering Firewater Pump (S-7616-16-0):

The engine will be equipped with:
- [X] Turbocharger
- [ ] Intercooler/aftercooler
- [X] Charge air cooler
- [ ] Injection timing retard (or equivalent per District Policy SSP-1805, dated 8/14/1996)
- [ ] Positive Crankcase Ventilation (PCV) or 90% efficient control device
- [ ] This engine is required to be, and is UL certified
- [ ] Catalytic particulate filter
- [X] Very Low (0.0015%) sulfur diesel

The emission control devices/technologies and their effect on diesel engine emissions detailed below are from *Non-catalytic NO_X Control of Stationary Diesel Engines*, by Don Koeberlein, CARB.

The turbocharger reduces the NO_X emission rate from the engine by approximately 10% by increasing the efficiency and promoting more complete burning of the fuel.

The intercooler/aftercooler functions in conjunction with the turbocharger to reduce the inlet air temperature. By reducing the inlet air temperature, the peak combustion temperature is lowered, which reduces the formation of thermal NO_X. NO_X emissions are reduced by approximately 15% with this control technology.

The use of very low-sulfur diesel fuel (0.0015% by weight sulfur maximum) reduces SO_X emissions by over 99% from standard diesel fuel.

VII. General Calculations

Assumptions and Emission Factors:

Combined Cycle Combustion Turbine Generator (S-7616-9-0):

Assumptions:

The combustion turbine generator's hours of operation and the number of cold starts, hot starts, shutdowns, and their duration are listed in the table below:

- Total Annual Hours of Operation: 8,322 hr (= 8760 x 95%)
- Total Number of Cold Starts per Year: 10
- Cold Start Duration (hr): 3
- Total Number of Hot Starts per Year: 20
- Hot Start Duration (hr): 1
- Total Number of Shutdowns per Year: 30
- Shutdown Duration (hr): 0.5
- Duct Burner Operation (hr): 8,257 [2]
- Commissioning emissions will count towards the annual emission limit of the CTG.

Emission Factors:

Emission data for the combustion turbine generator was provided to the applicant by Fluor Corporation based on various operating parameters. The lb/hr emission rates indicated in the tables below are equivalent to the stated ppm values of firing on natural gas, hydrogen-rich syngas, and a combination of both (co-firing) at the various conditions.

[2] 8,257 hr/yr = (Total Hours of Operation) – (Duration of Cold and Hot Starts and Shutdowns)
= 8,322–(10(3) + 20(1) + 30(0.5))

Natural Gas Firing: Average Emission Rates from CTG – Normal Operation [3]		
CTG Operating Parameters:		
Ambient Temperature	Units	Yearly Average- 65°F
CTG Load Level	Percent Load (%)	100%
Evap. Cooling Status	off / on	N/A
Duct Burner Status	off / on	On
Pollutant:		**Emission Rate (lb/hr):**
NO_x @ 4.0 ppm (@ 2 ppm)		35.1 (17.6)
CO @ 5.0 (@ 4.0 ppm)		26.7 (21.4)
VOC @ 2.0 (@ 1.5 ppm)		6.1 (4.6)
SO_2 (@ 12.65 ppmv)		4.8
$PM_{10} = PM_{2.5}$		18.0
NH_3 (@ 5.0 ppm slip)		16.2
All turbine operating parameters and emissions data provided by Fluor Corporation based on expected operating parameters.		

Hydrogen-Rich Fuel Firing: Average Emission Rates from CTG – Normal Operation		
CTG Operating Parameters:		
Ambient Temperature	UNITS	Yearly Average- 65°F
CTG Load Level	Percent Load (%)	100%
Evap. Cooling Status	off / on	N/A
Duct Burner Status	off / on	On
Pollutant:		**Emission Rate (lb/hr):**
NO_x @ 4.0 ppm (@ 2 ppm)		39.7 (19.9)
CO @ 3.0 ppm		18.1
VOC @ 1.0 ppm		3.5
SO_2 (@ 12.65 ppmv)		6.8
$PM_{10} = PM_{2.5}$		19.8
NH_3 (@ 5.0 ppm slip)		18.4
All turbine operating parameters and emissions data provided by Fluor Corporation based on expected operating parameters.		

[3] The emission factors in parentheses represent the targeted values.

Maximum Hourly Emissions – @ Worst Case Extreme Conditions (to be used for Daily Calculations)							
		NO_X (lb/hr)	CO (lb/hr)	VOC (lb/hr)	PM_{10} (lb/hr)	SO_X (lb/hr)	NH_3 (lb/hr)
Emission Rates	Upper	42.0	32.0	7.3	19.8	6.8	19.4
	Target	21.0	25.6	5.5			
Type of firing		Cofiring & 20 F	Cofiring & 20 F	Cofiring & 20 F	Cofiring	Syngas	Syngas & 20 F

Co-Firing (Hydrogen-Rich Fuel and Natural Gas): Average Emission Rates from CTG – Normal Operation		
CTG Operating Parameters:		
Ambient Temperature	UNITS	Yearly Average- 65°F
CTG Load Level	Percent Load (%)	100%
Evap. Cooling Status	off / on	N/A
Duct Burner Status	off / on	On
Pollutant:		**Emission Rate (lb/hr):**
NO_x @ 4.0 ppm (@ 2 ppm)		39.7 (19.9)
CO @ 5.0 (@ 4.0 ppm)		30.2 (24.2)
VOC @ 2.0 (@ 1.5 ppm)		6.9 (5.2)
SO_2 (@ 12.65 ppmv)		6.0
$PM_{10} = PM_{2.5}$		19.8
NH_3 (@ 5.0 ppm slip)		18.3
All turbine operating parameters and emissions data provided by Fluor Corporation based on expected operating parameters.		

Summary of Maximum Hourly Emission Rates for Normal Operations:

Maximum Hourly Normal Emissions (highest of Syngas, Natural Gas, and Cofiring) – @ Yearly Average 65 F (to be used for Annual Calculations)							
		NO_X (lb/hr)	CO (lb/hr)	VOC (lb/hr)	PM_{10} (lb/hr)	SO_X (lb/hr)	NH_3 (lb/hr)
Emission Rates	Upper	39.7	30.2	6.9	19.8	6.8	18.4
	Target	19.9	24.2	5.2			
Type of firing		Syngas	Cofiring	Cofiring	Cofiring	Cofiring or Syngas	Syngas

Startup / Shutdown Emissions from Turbine								
Cold Startup			**Hot Startup**			**Shutdown**		
180 min. in cold startup	Max 1-hr (lb/hr)	Total (lb/180min)	60 min. in hot startup	Max 1-hr (lb/hr)	Total (lb/60min)	30 min. in shutdown	Max 1-hr. (= max 30-min) (lb/hr)	Total (lb/30min)
NO_X	90.7	272.0	**NOx**	167.0	167.0	**NOx**	62.0	62.0
CO	1,679.7	5,039.0	**CO**	394.0	394.0	**CO**	126.0	126.0
VOC	266.7	800.0	**VOC**	98.0	98.0	**VOC**	21.0	21.0
SO_2 (@ 12.65 ppmv)	5.1	15.3	**SO_2**	5.1	5.1	**SO_2**	2.6	2.6
PM_{10} = $PM_{2.5}$	19.0	57.0	**PM_{10} =$PM_{2.5}$**	19.8	19.8	**PM_{10} =$PM_{2.5}$**	5.0	5.0
All turbine operating parameters and emissions data provided by Fluor Corporation based on expected operating parameters.								
Startup and shutdown SO_2 emissions will always be lower than normal operation SO_2 emissions. Startup and shutdown emissions are assumed equal to the normal operations max emission rate.								

The two tables below list the commissioning emissions for the CTG/HRSG for firing on natural gas and hydrogen-rich gas:

Commissioning Emissions (Maximum Hourly) lb/hr -- Criteria Pollutant Emissions for Commissioning of the CTG/HRSG on Natural gas at 59 °F					
	SOx	**NOx**	**CO**	**VOC**	**PM10**
First Fire	1.0	58.0	**2200.0**	**345.0**	**18.0**
Green Rotor Run-In	1.3	110.0	1200.0	65.0	**18.0**
Steam Blows	2.2	**345.0**	50.0	10.0	**18.0**
Restoration					
Initial Steam Turbine Roll	1.3	110.0	1200.0	65.0	**18.0**
NO_X Tuning with Steam Injection and initial STG loading	2.8	121.0	58.5	3.4	**18.0**
NO_X Tuning with Steam Injection and initial STG loading	3.7	168.0	80.1	4.7	**18.0**
Finalize NO_X Control Constants	2.7	121.0	58.5	3.4	**18.0**
Finalize NO_X Control Constants	3.2	145.0	68.3	4.0	**18.0**
Finalize NO_X Control Constants	3.7	168.0	80.1	4.7	**18.0**
CTG Water Wash and Contractor's Emission and Simple Cycle Performance Testing	3.7	168.0	80.1	4.7	**18.0**
Duct Burner Testing	**4.7**	203.0	130.1	12.2	**18.0**
Install SCR and Oxidation Catalyst	3.7	168.0	80.1	4.7	**18.0**
CEMS Drift and Source Testing	3.7	33.7	20.5	4.7	**18.0**
Functional Testing Demonstration Hours	0.8	41.7	463.3	76.7	8.3
Functional Testing Steady State Hours	3.7	33.7	20.5	4.7	**18.0**
CTG Water Wash and Preparation for Performance Testing					
Combined Cycle Performance Testing	4.7	43.9	26.7	7.5	**18.0**
Continuous Operation Test	3.7	33.7	20.5	4.7	**18.0**

Commissioning Emissions (Maximum Hourly) lb/hr -- Criteria Pollutant Emissions for Commissioning of the CTG/HRSG on Hydrogen Rich-Syngas at 59° F					
	SOx	**NOx**	**CO**	**VOC**	**PM10**
CTG Starts on Natural Gas	2.8	**167.0**	**394.0**	**98.0**	23.0
CTG Fired Shutdowns	1.0	62.0	126.0	21.0	10.0
CTG/HRSG Standby Operation on Natural Gas	2.7	24.2	14.8	3.4	18.0
CTG NO_X Tuning @ 45% H2-Rich Syngas Co-firing	**3.1**	99.0	43.3	5.5	**36.0**
CTG NO_X Tuning @ 90% H2-Rich Syngas Co-firing	2.4	114.5	46.5	3.0	**36.0**
CTG NO_X Tuning @ 100% H2-Rich Fuel	2.4	58.0	9.1	2.8	**36.0**
CTG NO_X Tuning @ 100% H2-Rich Fuel Min Load	1.7	48.0	6.4	2.3	**36.0**
CTG Water Wash and Contractor's Emission and Simple Cycle Performance Testing on H2-Rich Fuel	2.4	46.1	16.8	3.2	**36.0**
Duct Burner Testing on H2-Rich Syngas	2.7	49.7	18.1	3.5	**36.0**
Source Testing @ 100% H2-Rich Syngas	2.4	46.1	16.8	3.2	**36.0**
Source Testing @ 100% H2-Rich Syngas	2.7	49.7	18.1	3.5	**36.0**
Source Testing @ 45% H2-Rich Syngas Co-firing	3.1	39.6	24.1	5.5	**36.0**
Source Testing @ 90% H2-Rich Syngas Co-firing	2.4	48.4	29.4	6.7	**36.0**
Functional Testing Steady State Hours	2.7	49.7	18.1	3.5	**36.0**
CTG Water Wash and Preparation for Performance Testing					
IGCC Performance Testing	2.7	49.7	18.1	3.5	**36.0**
Continuous Operation Test	2.7	49.7	18.1	3.5	**36.0**

Feedstock Handling and Storage System (S-7616-1-0):

The feedstock and gasifier solids material handing operation will result in PM10 emissions.

These operations include bulk material unloading, loading, belt conveying, belt transfer points, silo loading, and reclaim.

- Outlet dust loading of each Baghouse: 0.005 grains/scf

Description	Dust Collector No.	Maximum Process Weight of Material (ton/hr)	Maximum Daily Hours of Operation (hr/day)	Maximum Process Weight of Material (ton/day)	Air Flow to Collector (acfm)
Truck Unloading	DC-1	775	24	18,600	6,467
Coke/coal Silos (filling)	DC-2	775	24	18,600	16,376
Mass Flow Bins (in/out)	DC-3	170	24	4,080	7,620
Coke/coal Silos (loadout)	DC-4	170	24	4,080	4,872
Crusher Inlet/Outlet	DC-5	170	24	4,080	4,673
Fluxant Bins (filling)	DC-6	40	24	960	1,234

Description	Maximum Process Weight of Material (ton/hr)	Maximum Process Weight of Material (ton/day)	Air Flow to Collector (acfm)	Daily Emissions (lb/day)
DC-1: Truck Unloading	775	18,600	6,467	6.65
DC-2: Coke/Coal Silos (Filling)	775	18,600	16,376	16.84
DC-3: Mass Flow Bins (In/Out)	170	4,080	7,620	7.84
DC-4: Coke/Coal Silos (Loadout)	170	4,080	4,872	5.01
DC-5: Crusher Inlet/Outlet	170	4,080	4,673	4.81
DC-6: Fluxant Bins	40	960	1,234	1.27

Description	Equivalent Emission Factor (lb/ton)	Annual Average Throughput (ton/hr)	Maximum Annual Throughput (ton/day)	Annual Emissions (lb/yr)
DC-1: Truck Unloading	0.00036	150	1,314,000	469.6
DC-2: Coke/Coal Silos (Filling)	0.00091	150	1,314,000	1189.9
DC-3: Mass Flow Bins (In/Out)	0.00192	150	1,314,000	2524.2
DC-4: Coke/Coal Silos (Loadout)	0.00123	150	1,314,000	1613.9
DC-5: Crusher Inlet/Outlet	0.00118	150	1,314,000	1548.0
DC-6: Fluxant Bins	0.00132	6	52,560	69.5

Gasification System (S-7616-2-0)

- The gasification plant consists of three gasifiers. The plant will be capable of continuous operation of one or two gasifiers, each at maximum flow (each at 100 percent of rated operation).

- Each of the three gasification trains will have one natural gas fired burner used to warm the gasification refractory to facilitate startup.

- Each gasifier warming heater operates at 18 MMBtu/hr firing natural gas for a total of 1,200 hours of normal operation per year. A maximum of two heaters will be allowed operate simultaneous (when switching gasifiers), but typically only one heater operates at a given time.

- The heaters will not operate when the gasification train is operating.

- The only criteria pollutant emissions from the gasifier units are the by-products of the natural gas fired burners (3 total, 1 per gasifier) during start-up.

Project Emissions Factors		
Pollutant	**lb/MMBtu**	**Emission Factor Source**
NO_X	0.24	Equipment supplier **
SO_X	0.0021 (12.65 ppm)	See mass balance calculation below. *
PM_{10}	0.0076	AP-42 Table 1.4-2
CO	0.035	Equipment supplier **
VOC	0.068	Equipment supplier **

* SO_X emissions are based on a maximum sulfur content of 0.75 gr-S/100 scf (12.65 ppm-SOx in the natural gas) proposed by the applicant.

(0.75 ~~gr-S~~/100 ~~dscf~~ x 1 ~~lb-S~~/7000 ~~gr~~ x 64 lb SO_X/32 ~~lb-S~~ x 1 ~~scf~~/1000 ~~Btu~~ x 10^6 ~~Btu~~/MMBtu) = 0.0021 lb/MMBtu

** Emission factors were supplied by Carl Connelly of the equipment manufacturer (John Zink) in an email dated 10/19/09.

- Fugitive VOC and CO emissions are assessed to components in this permit unit as calculated in the Fugitive Emission Calculations spreadsheet in Appendix E.

Flares:

Assumptions:

Gasification Flare (S-7616-3-0):

- The gasification flare will dispose of gasifier startup gasses and syngas generated during short-term combustion turbine outages and other unplanned power plant upsets or equipment failures.
- When the gasifier refractory reaches operating temperature, the gasifier can be started by introducing oxygen and a sulfur-free feedstock, then switching to the petroleum coke and/or petroleum coke-coal blend feedstock. In the meantime, raw syngas produced will be sent to ground flare until the system pressure and flow are stabilized. For normal start-up, the syngas sent to flare is essentially sulfur-free.
- The gasification flare is an elevated flare with a maximum rating of approximately 1,695 MMBtu/hr (natural gas assist) with 0.5 MMBtu/hr natural gas pilot.
- Total hours of operation (pilot): 8,760 hr/yr
- Flaring will be limited to: 40,680 MMBtu/day and 196,900 MMBtu/yr
- Maximum annual emissions are calculated based on the maximum allowable firing scenario of 8,670 hr/yr of pilot operation and 196,900 MMBtu/yr of flaring events (91,500 MMBtu/yr of unshifted gas and 105,400 MMBtu/yr of shifted gas as shown below).

Startup/Shutdown Flared Gas					
	Maximum Gas Flared (MMBtu/yr)	Event/Yr	Percentage Unshifted	Unshifted Gas (MMBtu/yr)	Shifted Gas (MMBtu/yr)
Cold plant startup:	30,000	1	20%	6,000	24,000
Plant shutdown:	500	1	100%	500	0
Gasifier outages:	60,000	24	100%	60,000	0
Gasifier hot restarts:	25,000	12	100%	25,000	0
Off-line CTG wash:	81,400	12	0%	0	81,400
Totals (MMBtu/yr):	196,900			91,500	105,400

- Flare natural gas heating value: 1000 Btu/scf
- All H2S is converted to SOx upon combustion (worst-case assumption)
- Pilot maximum heat inputs: 0.5 MMBtu/hr = 12 MMBtu/day = 4,380 MMBtu/yr

SRU Flare (S-7616-6-0):

- The SRU flare will dispose of gas emissions from the AGR, TGTU, and SRU sources during startup (after passing via a scrubber) or to oxidize releases during emergency or upset events.
- The SRU flare is an elevated flare with a maximum rating of 36.0 MMBtu/hr (natural gas assist) with 0.3 MMBtu/hr natural gas pilot.
- Total hours of operation (pilot): 8,760 hr/yr
- Total hour of flaring (for startup relief gas): 40 hr/yr
- Maximum annual emissions are calculated based on 8,760 hr/yr of pilot operation and 40 hr/yr of flaring events. This scenario represents the maximum allowable firing scenario.
- Approximate control efficiency of scrubber: 99.6%
- Gas flow rate: 4,600 lb-SO2/hr
- Controlled gas flow rate = (4,600 lb-SO2/hr)(1 – 0.996) = 18.4 lb/hr
- Maximum annual emissions are calculated based on 8,760 hr/yr of pilot operation and 40 hr/yr of flaring events. This scenario represents the maximum allowable firing scenario.

Emergency Rectisol Flare (S-7616-7-0):

- The Rectisol flare will be used as an emergency flare to safely dispose of low temperature gas streams during startup, shutdown, and unplanned upsets or emergency events.
- The emergency Rectisol flare is an elevated natural gas assist flare with 0.3 MMBtu/hr natural gas pilot.
- Total hours of operation (pilot): 8,670 hr/yr
- Total hour of non-emergency flaring: 0 hr/yr (proposed by applicant)
- Maximum annual emissions are calculated based on 24 hr/day and 8,670 hr/yr of pilot usage. This scenario represents the maximum allowable firing scenario.

Emission Factors:

Emission Factors for Natural Gas Fired Pilots Only

Project Emissions Factors		
Pollutant	**lb/MMBtu**	**Emission Factor Source**
NO_X	0.12	Supplier Data (John Zink Co.)
SO_X	0.00214	0.75 grain/100 scf. See mass balance calculation below. *
PM_{10}	0.003	Supplier Data (John Zink Co.)
CO	0.08	Supplier Data (Callidus Technologies)
VOC	0.0013	Supplier Data (John Zink Co.)

*EF SO2 = 0.75 gr/100 scf x 1 lb/7,000 grain x 64 lb-SO2/32 lb-S x 1 scf/1,000 Btu x 1E6 Btu/MMBtu = 0.00214 lb/MMBtu

Emission Factors for Gasifier Startup (Startup Gas to Gasification Flare S-7616-3-0)

Project Emissions Factors		
Pollutant	**lb/MMBtu**	**Emission Factor Source**
NO_X	0.068	Supplier Data (John Zink Co.) and BACT requirement
SO_X	0.00, 0.00208	No sulfur in startup feed. CTG wash: 5 ppmv sulfur in product H2-rich gas.
PM_{10}	0.00	Supplier Data (John Zink Co.)
CO	2.0, 0.37	2.0 lb-CO/MMBtu on unshifted syngas and 0.37 lb/MMBtu on shifted syngas.
VOC	0.00	No VOC in startup feed (See CEC Data Adequacy Response #3).

Emission Factors for SRU Startup (AGR Acid Gas to SRU Flare S-7616-6-0)

Project Emissions Factors			
Pollutant	**Emission Factor (lb/MMBtu)**	**Emission Rate (lb/hr)**	**Emission Factor Source**
NO_X	0.12	4.3	Supplier Data (John Zink Co.)
SO_X		4,600 lb/hr @ 99.6% control efficiency = 18.4 lb/hr	Vent separated acid gas from Rectisol Unit to SRU Flare for one hour prior to introduction to SRU. Assumes one gasifier at 70% capacity (high sulfur coke feed) and 50% of separated sulfur goes to flare while the other 50% is retained in the Rectisol solvent.
PM_{10}	0.003	0.11	Supplier Data (John Zink Co.)
CO	0.08	2.9	Supplier Data (Callidus Technologies)
VOC	0.0013	0.05	Supplier Data (John Zink Co.)

<u>Cooling Towers (S-7616-4-0, -11-0, and -12-0)</u>:

- PM_{10} is the only criteria pollutant emitted by the cooling tower.
- Density of water = 8.34 lb/gal = 1000 g/L
- Cooling tower drift eliminator has a drift rate of 0.0005% (proposed by the applicant)
- TDS concentration shall not exceed 9,000 ppm (proposed by applicant) = 75.06 lb/1000 gallon (9,000 ppm-TDS = (9,000/1E6)(8.34 lb/gal) = 0.07506 lb/gal = 75.06 lb/1000 gal; 9,000 ppm-TDS = (9,000/1E6)(1000 g/L) = 9 g/L)
- Each tower is assumed to operate 95% of the year, or 8,322 hr/yr at full capacity (proposed by applicant).

	Power Block (S-7616-12)	Gasification Process Area (S-7616-4)	Air Separation Unit (S-7616-11)	Source
Cooling water (CW) circulation rate, gpm	175,000	42,300	40,200	Typical plant performance
CW dissolved solids (ppm-TDS)	9,000	9,000	9,000	Proposed by applicant
Drift, fraction of circulating CW	0.0005%	0.0005%	0.0005%	Expected BACT

Sulfur Recovery System's Tail Gas Thermal Oxidizer (S-7616-5-0)

- Thermal Oxidizer Firing Rate: 10 MMBtu/hr
- Maximum Annual Operation for Process Vent Disposal: 8,760 hr/yr
- Maximum Annual Operation for SRU Startup Gas Disposal: 300 hr/yr

Emission Factors for Tail Gas Thermal Oxidizer (for Disposal of Process Vent Gas)

NOx (lb/MMBtu)	0.24	Applicant's Engineering Estimates
CO (lb/MMBtu)	0.20	Applicant's Engineering Estimates
VOC (lb/MMBtu)	0.0055	AP-42 Table 1.4.2
SO2 (lb/MMBtu)	See note below. **	Applicant's Engineering Estimates
PM10 = PM2.5 (lb/MMBtu)	0.0076	AP-42 Table 1.4.2

** Assume an allowance of 2 lb/hr SO2 emission to account for sulfur in the various vent streams plus fuel.

Emission Factors for Tail Gas Thermal Oxidizer (for Disposal of SRU Startup Gas)

NOx (lb/MMBtu)	0.24	Applicant's Engineering Estimates
CO (lb/MMBtu)	0.20	Applicant's Engineering Estimates
VOC (lb/MMBtu)	0.0055	AP-42 Table 1.4.2
SO2 (lb/MMBtu)	0.00204	Applicant's Engineering Estimates
PM10 = PM2.5 (lb/MMBtu)	0.0076	AP-42 Table 1.4.2

- Fugitive VOC and CO emissions are assessed to components in this permit unit as calculated in the Fugitive Emission Calculations spreadsheet in Appendix E.

CO2 Recovery and Vent System (S-7616-8-0):

- Maximum duration of venting episodes: 24 hr/day and cumulative 504 hr/yr (equivalent to 21 days with breakdown of operation explained in the table below).
- Maximum flowrate: 656,000 lb/hr (15,150 lbmol/hr) (proposed by applicant)
- Vent stream CO concentration limit: 1,000 ppm-CO (proposed by applicant)
- Vent stream VOC concentration limit: 40 ppm-VOC (proposed by applicant)
- Vent stream H2S concentration limit: 10 ppm-H2S (proposed by applicant)

Scenario for Early Operation				
	Event	**Events per Year**	**Duration of Time to Repair (Days per Event)**	**Days per Year of CO2 Vent Operation (1)**
A	Cold Gasification Block Startup	6	1	6
B	CO2 Compressor Unplanned Outage	4	2	8
C	CO2 Pipeline Unplanned Outage	1	1	1
D	CO2 Off-Taker Unable to Accept	2	3	6
Total Days				21
Scenario for Mature Operation				
	Event	**Events per Year**	**Duration of Time to Repair (Days per Event)**	**Days per Year of CO2 Vent Operation (1)**
A	Cold Gasification Block Startup	1	1	1
B	CO2 Compressor Unplanned Outage	2 to 4	2	4 to 8
C	CO2 Pipeline Unplanned Outage	0 to 1	1	0 to 1
D	CO2 Off-Taker Unable to Accept	0	0	0
Total Days				5 to 10

Note:
1 The flow rate of CO_2 during venting will vary depending on the number of gasifiers operating and the syngas/hydrogen-rich fuel production rate. Venting during a cold Gasification Block startup is expected to be less than one-half on the maximum CO_2 production.

Natural Gas Fired Auxiliary Boiler (S-7616-13-0)

Assumptions:

- The auxiliary boiler will provide steam to facilitate CTG startup and for other industrial purposes.
- The unit will be fired solely on PUC-regulated natural gas.
- The maximum rating of the boiler is 142 MMBtu/hour (based on the higher heating value [HHV]).
- The maximum operating schedule is 24 hours per day and 2,190 hours per year (proposed by applicant in supplemental applicant and in calculations)
- Annual potential to emit is calculated based on 2,190 hours of operation per year.
- Natural gas heating value: 1,000 Btu/scf (for PUC-quality natural gas)
- F-Factor for natural gas: 8,578 dscf/MMBtu corrected to 60°F (40 CFR 60, Appendix B)

Emission Factors:

Emissions are based on vendor supplied emission factors. NOx emissions are based on 5 ppmvd at 3 percent O2 with installation of ultra-low NOx combustors and flue gas recirculation. CO emissions are based on 50 ppmvd @ 3% O2. A summary of auxiliary boiler emissions is presented below.

For this unit, post-project emission factors are listed in the table below.

Pollutant	Post-Project Emission Factors (EF2)			Source
NO_X *	6.0 lb-NO_X/MMscf	0.0060 lb-NO_X/MMBtu	5 ppmvd NO_X (@ 3%O_2)	Applicant's data
SO_X	2.85 lb-SO_X/MMscf	0.00285 lb-SO_X/MMBtu		District Policy APR 1720
PM10		0.005 lb-PM10/MMBtu		Applicant's data
CO	37 lb-CO/MMscf	0.037 lb-CO/MMBtu	50.8 ppmvd CO (@ 3%O_2)	Applicant's data
VOC	4 lb-VOC/MMscf	0.004 lb-VOC/MMBtu	9.5 ppmvd VOC (@ 3% O_2)	Applicant's data

* According to boiler manufacturers, low NO_X burners will achieve their rated emissions within one to two minutes of initial startup and do not require a special shutdown procedure. Because of the short duration before achieving the rated emission factor following startup, the emissions factors for this unit during startup and shutdown will be assumed to be the same as the steady state emission factors shown in the table above.

Diesel-Fired Emergency Engines Powering Electrical Generators (S-7616-14 and -15):

- Emergency operating schedule: 24 hr/day
- Non-emergency operating schedule: 50 hr/year (per Airborne Toxic Control Measure for Stationary Compression Ignition Engines, Table 1)[4]
- Density of diesel fuel: 7.1 lb/gal
- EPA F-factor (adjusted to 60 °F): 9,051 dscf/MMBtu
- Fuel heating value: 137,000 Btu/gal
- BHP to Btu/hr conversion: 2,542.5 Btu/bhp-hr
- Thermal efficiency of engine: commonly ≈ 35%
- PM_{10} fraction of diesel exhaust: 0.96 (CARB, 1988)
- Rating of each engine: 2,922 bhp

To maximize selection flexibility, the applicant requests that the District use the applicable CARB Tier 4 standard as the emission limits for these engines. Therefore, the applicable CARB off-road engine Tier 4 standards will be used as the maximum allowable emission limits for these engines.

The emissions below are based on CARB's "Table 1. Off Road Compression - Ignition Diesel Engine Standards (NMHC + NOx/CO/PM in g/bhp hr)."

Tier 4 Diesel-Fired IC Engines NO_X and VOC Estimated Emissions				
Horsepower Range (bhp)	NMHC (g/bhp-hr)	NOx (g/bhp-hr)	CO (g/bhp-hr)	PM (g/bhp-hr)
≥ 1027 hp	0.3	0.5	2.6	0.07

Diesel-Fired Emergency Engine Powering Firewater Pump (S-7616-16-0)

- Emergency operating schedule: 24 hr/day
- Non-emergency operating schedule: 100 hr/year (Rule 4702 and Airborne Toxic Control Measure for Stationary Compression Ignition Engines, Table 1)[5]
- Density of diesel fuel: 7.1 lb/gal
- EPA F-factor (adjusted to 60 °F): 9,051 dscf/MMBtu
- Fuel heating value: 137,000 Btu/gal
- BHP to Btu/hr conversion: 2,542.5 Btu/bhp-hr
- Thermal efficiency of engine: commonly ≈ 35%

[4] Table 1 (Summary of the Emission Standards and Operating Requirements for New Stationary Emergency Standby Diesel-Fueled CI Engines > 50 BHP) limits engines with PM emissions > 0.01 and ≤ 0.15 g-bhp to no more than 50 hr/yr of maintenance and testing.
[5] Table 1 (Summary of the Emission Standards and Operating Requirements for New Stationary Emergency Standby Diesel-Fueled CI Engines > 50 BHP) limits engines with PM emissions ≤ 0.01 g-bhp to no more than 100 hr/yr of maintenance and testing.

- PM_{10} fraction of diesel exhaust: 0.96 (CARB, 1988)
- Rating of engine: 556 bhp

To maximize selection flexibility, the applicant requests that the District use the applicable CARB Tier 4 standard as the emission limits for these engines. Therefore, the applicable CARB off-road engine Tier 4 standards will be used as the maximum allowable emission limits for these engines.

The emissions below are based on CARB's "Table 1. Off Road Compression - Ignition Diesel Engine Standards (NMHC + NOx/CO/PM in g/bhp hr)."

Tier 4 Diesel-Fired IC Engines NO_X and VOC Estimated Emissions				
Horsepower Range (bhp)	NMHC (g/bhp-hr)	NOx (g/bhp-hr)	CO (g/bhp-hr)	PM (g/bhp-hr)
≥ 300 and < 600 bp	0.14	1.5	2.6	0.01

C. Calculations

1. Pre-Project Potential to Emit (PE1)

Since the emission units in this project are new, PE1 = 0 for all criteria pollutants.

2. Post Project Potential to Emit (PE2)

Combustion Turbine Generator (S-7616-9-0):

a. Maximum Hourly PE2

The maximum hourly potential to emit for NO_X from each CTG will occur when the unit is operating under startup mode. The maximum hourly PE for each turbine operating is when it is starting up. The maximum hourly emissions for each turbine is summarized in the table below:

Maximum Cold Startup Emissions (1-hour duration)					
	NO_X (lb/hr)	CO (lb/hr)	VOC (lb/hr)	PM_{10} (lb/hr)	SO_X (lb/hr)
Mass Emission Rate	90.7	1,679.7	266.7	19.0	5.1

Maximum Hot Startup Emissions (1-hour duration)					
	NO_X (lb/hr)	CO (lb/hr)	VOC (lb/hr)	PM_{10} (lb/hr)	SO_X (lb/hr)
Mass Emission Rate	167.0	394.0	98.0	19.8	5.1

Maximum Shutdown Emissions (1-hour duration)					
	NO_X (lb/hr)	CO (lb/hr)	VOC (lb/hr)	PM_{10} (lb/hr)	SO_X (lb/hr)
Mass Emission Rate	62.0	126.0	21.0	5.0	2.6

Maximum Hourly Emissions – @ Worst Case Extreme Conditions (to be used for Daily Calculations)							
		NO_X (lb/hr)	CO (lb/hr)	VOC (lb/hr)	PM_{10} (lb/hr)	SO_X (lb/hr)	NH_3 (lb/hr)
Emission Rates	Upper	42.0	32.0	7.3	19.8	6.8	19.4
	Target	21.0	25.6	5.5			
Type of firing		Cofiring & 20 F	Cofiring & 20 F	Cofiring & 20 F	Cofiring	Syngas	Syngas & 20 F

Maximum Commissioning Hourly Emissions – @ Worst Case for Natural Gas Firing					
	NO_X (lb/hr)	CO (lb/hr)	VOC (lb/hr)	PM_{10} (lb/hr)	SO_X (lb/hr)
Emission Rates	345.0	2200.0	345.0	18.0	4.7
Type of firing	Steam Blows	First Fire	First Fire	Various	Duct Burner Testing

Maximum Commissioning Hourly Emissions – @ Worst Case for Hydrogen-Rich Gas Firing					
	NO_X (lb/hr)	CO (lb/hr)	VOC (lb/hr)	PM_{10} (lb/hr)	SO_X (lb/hr)
Emission Rates	167.0	394.0	98.0	36.0	3.1
Type of firing	CTG Starts on Natural Gas	CTG Starts on Natural Gas	CTG Starts on Natural Gas	Various	CTG NO_X Tuning @ 45% H2-Rich Syngas Co-firing

b.Maximum Daily PE2

The maximum daily emissions occur when the CTG operates with 1 cold startup, 1 hot startup, and 1 shutdown, and the remainder at 100% load (@ 63 °F). The results for the CTG are summarized in the table below:

Daily Post Project Potential to Emit (PE2) – Target Limits							
	Cold Startup Emissions Rate (lb/day) [6]*	Hot Startup Emissions Rate (lb/day) *	Shutdown Emissions Rate (lb/day) *	Emissions Rate @ 100% Load (lb/hr)	Assumed Hours at 100% Load (hr/day)	Emissions Rate @ 100% Load (lb/day)	Daily PE2 (lb/day)
Formula	lb/hr x 1 max event/day x 180 min/event	lb/hr x 1 max event/day x 60 min/event	lb/hr x 1 max event/day x 30 min/event	(lb/hr)	[7]**		Cold Startup + Hot Startup + Shutdown + 100% Load Combination Resulting in Greatest Emissions
NO_X	272.0	167.0	62.0	21.0	19.5	409.5	910.5
SO_X	15.3	5.1	2.6	6.8	24	163.2	163.2
PM_{10}	57.0	19.0	5.0	19.8	20	396.0	472.0
CO	5,039.0	394.0	126.0	25.6	19.5	499.2	6,058.2
VOC	800.0	98.0	21.0	5.5	19.5	107.3	1,026.3
NH_3				19.4	24	465.6	465.6

Daily Post Project Potential to Emit (PE2) – Upper Limits							
	Cold Startup Emissions Rate (lb/day) *	Hot Startup Emissions Rate (lb/day) *	Shutdown Emissions Rate (lb/day) *	Emissions Rate @ 100% Load (lb/hr)	Assumed Hours at 100% Load (hr/day)	Emissions Rate @ 100% Load (lb/day)	Daily PE2 (lb/day)
Formula	lb/hr x 1 max event/day x 180 min/event	lb/hr x 1 max event/day x 60 min/event	lb/hr x 1 max event/day x 30 min/event	(lb/hr)	**		Cold Startup + Hot Startup + Shutdown + 100% Load Combination Resulting in Greatest Emissions
NO_X	272.0	167.0	62.0	42.0	19.5	819.0	1,320.0
SO_X	15.3	5.1	2.6	6.8	24	163.2	163.2
PM_{10}	64.0	23.0	5.0	19.8	20	396.0	483.0
CO	5,039.0	394.0	126.0	32.0	19.5	624.0	6,183.0
VOC	800.0	98.0	21.0	7.3	19.5	142.4	1,061.4
NH_3				19.4	24	465.6	465.6

[6] The maximum daily emission rates for cold startup, hot startup, and shutdown are listed in the Assumptions and Emission Factors portion of Section VII.
[7] The daily hours of operation at 100% load were reduced by the respective time allowed for cold startup, hot startup, and shutdown (if those startup and shutdown conditions resulted in greater emissions during that period).

c. Maximum Annual PE2

The maximum annual emissions occur when the CTG operates for 8,257 hours per year at 100% load (65 F) with 10 cold startups, 20 hot startups, and 30 shutdowns. The results for the CTG are summarized in the table below:

Annual Post-Project Potential to Emit (PE2) – Target Limits						
	Cold Startup Emissions Rate (lb/yr)	Hot Startup Emissions Rate (lb/yr)	Shutdown Emissions Rate (lb/yr)	Emission Rate @ 100% Load (lb/hr)	Emission Rate @ 100% Load (lb/yr)	Annual PE2 (lb/yr)
Formula	lb/hr x 10 events/yr x 3 hr/event	lb/hr x 20 events/yr x 1 hr/event	lb/hr x 30 events/yr x 0.5 hr/event		Emissions rate x 8,257 hr/hr	Cold Startup + Hot Startup + Shutdown + 100% Load
NO_X	2,720	3,340	1,860	19.9	164,314	172,234
SO_X	153	102	78	6.8	56,148	56,481
PM_{10}	640	460	150	19.8	163,489	164,739
CO	50,390	7,880	3,780	24.2	199,819	261,869
VOC	8,000	1,960	630	5.2	42,936	53,526
NH_3				18.4	151,929	151,929

Annual Post-Project Potential to Emit (PE2) – Upper Limits						
	Cold Startup Emissions Rate (lb/yr)	Hot Startup Emissions Rate (lb/yr)	Shutdown Emissions Rate (lb/yr)	Emission Rate @ 100% Load (lb/hr)	Emission Rate @ 100% Load (lb/yr)	Annual PE2 (lb/yr)
Formula	lb/hr x 10 events/yr x 3 hr/event	lb/hr x 20 events/yr x 1 hr/event	lb/hr x 30 events/yr x 0.5 hr/event		Emissions rate x 8,257 hr/hr	Cold Startup + Hot Startup + Shutdown + 100% Load
NO_X	2,720	3,340	1,860	39.7	327,803	335,723
SO_X	153	102	78	6.8	56,148	56,481
PM_{10}	640	460	150	19.8	163,489	164,739
CO	50,390	7,880	3,780	30.2	249,361	311,411
VOC	8,000	1,960	630	6.9	56,973	67,563
NH_3				18.4	151,929	151,929

* 8,272 hr/yr = Total Hours of Operation – (Duration of Cold and Hot Starts and Shutdowns) = 8,322 – (10(3) + 10(1) + 20(0.5))
** Daily rate x 365 days/yr

Feedstock Handling and Storage System (S-7616-1-0)

Description	Maximum Process Weight of Material (ton/hr)	Maximum Process Weight of Material (ton/day)	Air Flow to Collector (acfm)	Daily Emissions (lb-PM10/day)
DC-1: Truck Unloading	775	18,600	6,467	6.65
DC-2: Coke/Coal Silos (Filling)	775	18,600	16,376	16.84
DC-3: Mass Flow Bins (In/Out)	170	4,080	7,620	7.84
DC-4: Coke/Coal Silos (Loadout)	170	4,080	4,872	5.01
DC-5: Crusher Inlet/Outlet	170	4,080	4,673	4.81
DC-6: Fluxant Bins	40	960	1,234	1.27
Total Daily Emissions (lb-PM10/day)				42.4

Description	Equivalent Emission Factor * (lb/ton)	Annual Average Throughput (ton/hr)	Maximum Annual Throughput (ton/yr)	Annual Emissions (lb-PM10/yr)
DC-1: Truck Unloading	0.00036	150	1,314,000	469.6
DC-2: Coke/Coal Silos (Filling)	0.00091	150	1,314,000	1189.9
DC-3: Mass Flow Bins (In/Out)	0.00192	150	1,314,000	2524.2
DC-4: Coke/Coal Silos (Loadout)	0.00123	150	1,314,000	1613.9
DC-5: Crusher Inlet/Outlet	0.00118	150	1,314,000	1548.0
DC-6: Fluxant Bins	0.00132	6	52,560	69.5
Total Annual Emissions (lb-PM10/yr)				7415

* The Equivalent Emission Factor is calculated as the Daily Emissions divided by the Maximum Daily Process Weight of Material.

Gasification System's Refractory Heaters (S-7616-2-0)

Although there are three 18.0 MMBtu/hr gasification refractory heaters available, no more than two heaters will operate at any one time. Therefore, the daily PE will be based on a maximum of two heaters operating at any one time. The annual PE will be based on each heater operating a maximum of 1,200 hr/yr.

Pollutant	Daily PE2 (S-7616-2-0)			
	EF2 (lb/MMBtu)	Heat Input (MMBtu/hr)	Operating Schedule (hr/day)	Daily PE2 (lb/day)
NO_X	0.24	36	24	207.4
SO_X	0.0021	36	24	1.8
PM_{10}	0.0076	36	24	6.6
CO	0.035	36	24	30.2
VOC	0.0680	36	24	58.8

Pollutant	Annual PE2 (S-7616-2-0)			
	EF2 (lb/MMBtu)	Heat Input (MMBtu/hr)	Operating Schedule (hr/year)	Annual PE2 (lb/year)
NO_X	0.24	54	1,200	15,552
SO_X	0.0021	54	1,200	136
PM_{10}	0.0076	54	1,200	492
CO	0.035	54	1,200	2,268
VOC	0.0680	54	1,200	4,406

PE for S-7616-2-0						
	PE gasifiers (lb/day)	PE fugitives (lb/day	PE total (lb/day)	PE gasifiers (lb/yr)	PE fugitives (lb/yr)	PE total (lb/yr)
NO_X	207.4	0	207.4	15,552	0	15,552
SO_X	1.8	0	1.8	136	0	136
PM_{10}	6.6	0	6.6	492	0	492
CO	30.2	32.5	62.7	2,268	12,471	14,739
VOC	58.8	73.5	132.3	4,406	26,830	31,236

Flares (S-7616-3-0, -6-0, and -7-0)

Gasification Flare (S-7616-3-0):

Gasification Flare (S-7616-3-0) - Daily Potential Emissions					
Pollutant	**From 0.5 MMBtu Pilot**		**From 1695 MMBtu/hr Flare Operation for a CTG off-line wash**		**Maximum Emissions (lb/day)**
	Emission Factor (lb/MMBtu)	Daily Emissions (lb/day)	Emission Factor (lb/MMBtu)	Daily Emissions (lb/day) *	Total
NO_X	0.12	1.440	0.07	2,847.6	2,849.0
SO_X	0.00214	0.026	0.0028	113.9	113.9
PM_{10}	0.003	0.036	0	0	0.04
CO	0.08	0.960	0.37	15,051.6	15,052.6
VOC	0.0013	0.016	0	0	0.02

Note: * Each CTG wash is expected to take 12 hours, although 24 hours were considered here for worst-case emission estimation.

Gasification Flare (S-7616-3-0) - Annual Potential Emissions					
Pollutant	**From 0.5 MMBtu Pilot**		**From 196,900 MMBtu/yr Annual Flare Operation**		**Maximum Emissions (lb/yr)**
	Emission Factor (lb/MMBtu)	Annual Emissions (lb/yr) based on 8760 hr/yr	Emission Factor (lb/MMBtu)	Annual Emissions (lb/yr)	Total
NO_X	0.12	526	0.07	13,783	14,309
SO_X	0.00214	9	0, 0.0028 *	228	237
PM_{10}	0.003	13	0	0	13
CO	0.08	350	2, 0.37 **	221,998	222,348
VOC	0.0013	6	0	0	6

* 0 lb-SOx/MMBtu during gasifier startup as there is no sulfur in the startup feed, and 0.0028 lb-SOx/MMBtu during the CTG washes based on 5 ppmv sulfur in the H2-rich gas. A maximum of 81,400 MMBtu/yr will be flared during the off-line CTG washes.

** 2 lb-CO/MMBtu on unshifted syngas and 0.37 lb/MMBtu on shifted syngas. A maximum of 196,900 MMBtu/yr (and a maximum of 91,500 MMBtu/yr of unshifted syngas) of total gas will be flared.

SRU Flare (S-7616-6-0):

SRU Flare (S-7616-6-0) - Daily Potential Emissions					
Pollutant	**From 0.3 MMBtu Pilot**		**From 36.0 MMBtu Flare Operation**		**Maximum Emissions (lb/day)**
	Emission Factor (lb/MMBtu)	Daily Emissions (lb/day)	Emission Factor (lb/hr)	Daily Emissions (lb/day)	Total
NO_X	0.12	0.04	4.3	103.2	103.2
SO_X	0.00214	0.0006	18.4	441.6	441.6
PM_{10}	0.003	0.0009	0.11	2.64	2.6
CO	0.08	0.02	2.9	69.6	69.6
VOC	0.0013	0.0004	0.05	1.2	1.2

SRU Flare (S-7616-6-0) – Annual Potential Emissions					
Pollutant	**From 0.3 MMBtu Pilot**		**From 36.0 MMBtu Flare Operation**		**Maximum Emissions (lb/yr)**
	Emission Factor (lb/MMBtu)	Annual Emissions (lb/yr) based on 8760 hr/yr	Emission Factor (lb/hr)	Annual Emissions (lb/yr) based on 40 hr/yr	Total
NO_X	0.12	315	4.3	172	487
SO_X	0.00214	6	18.4	736	742
PM_{10}	0.003	8	0.11	4	12
CO	0.08	210	2.9	116	326
VOC	0.0013	3	0.05	2	5

Emergency Rectisol Flare (S-7616-7-0):

Rectisol Flare (S-7616-7-0) - Daily Potential Emissions		
Pollutant	**From 0.3 MMBtu/hr Pilot**	
	Emission Factor (lb/MMBtu)	Daily Emissions (lb/day)
NO_X	0.12	0.9
SO_X	0.00214	0.02
PM_{10}	0.003	0.02
CO	0.08	0.6
VOC	0.0013	0.009

Rectisol Flare (S-7616-7-0) - Annual Potential Emissions		
Pollutant	**From 0.3 MMBtu/hr Pilot**	
	Emission Factor (lb/MMBtu)	Annual Emissions (lb/yr)
NO_X	0.12	315
SO_X	0.00214	6
PM_{10}	0.003	8
CO	0.08	210
VOC	0.0013	3

Cooling Towers (S-7616-4-0, -11-0, and -12-0):

Gasification Process Area Cooling Tower (S-7616-4-0)

PE_{PM10} = Drift rate x TDS (lb/gallon) x Water throughput (gal/min) x 60 min/hr x 24 hr/day
PE_{PM10} = 0.000005 x 75.06 lb/1000 gallon x 42,300 gal/min x 60 min/hr x 24 hr/day
= 22.86 lb-PM10/day

PE_{PM10} = 0.000005 x 75.06 lb/1000 gallon x 42,300 gal/min x 60 min/hr x 8,322 hr/yr
= 7,927 lb-PM10/yr

Air Separation Unit Cooling Tower (S-7616-11-0)

PE_{PM10} = Drift rate x TDS (lb/gallon) x Water throughput (gal/min) x 60 min/hr x 24 hr/day
PE_{PM10} = 0.000005 x 75.06 lb/1000 gallon x 40,200 gal/min x 60 min/hr x 24 hr/day
= 21.73 lb-PM10/day

PE_{PM10} = 0.000005 x 75.06 lb/1000 gallon x 40,200 gal/min x 60 min/hr x 8,322 hr/yr
= 7,533 lb-PM10/yr

Power Block Cooling Tower (S-7616-12-0)

PE_{PM10} = Drift rate x TDS (lb/gallon) x Water throughput (gal/min) x 60 min/hr x 24 hr/day
PE_{PM10} = 0.000005 x 75.06 lb/1000 gallon x 175,000 gal/min x 60 min/hr x 24 hr/day
= 94.58 lb-PM10/day

PE_{PM10} = 0.000005 x 75.06 lb/1000 gallon x 175,000 gal/min x 60 min/hr x 8,322 hr/yr
= 32,794 lb-PM10/yr

Sulfur Recovery System's Tail Gas Thermal Oxidizer (S-7616-5-0)

The Tail Gas Thermal Oxidizer can potentially operate up 8,760 hr/yr to control the process vent gas and up to 300 hr/yr to control the SRU startup gas. NOx, PM10, CO, and VOC emissions will be the same under either type of operation. Only the SOx emissions will vary depending on whether the oxidizer controls the process vent gas or the

SRU startup gas. Therefore, the calculations for all but the SOx emissions are shown in the tables below. SOx emissions are calculated separately following the tables.

Pollutant	Daily PE2 (S-7616-5-0)			
	EF2 (lb/MMBtu)	Heat Input (MMBtu/hr)	Operating Schedule (hr/day)	Daily PE2 (lb/day)
NO_X	0.24	10	24	57.6
PM_{10}	0.0076	10	24	1.8
CO	0.20	10	24	48.0
VOC	0.0055	10	24	1.3

Pollutant	Annual PE2 (S-7616-5-0)			
	EF2 (lb/MMBtu)	Heat Input (MMBtu/hr)	Operating Schedule (hr/year)	Annual PE2 (lb/year)
NO_X	0.24	10	8,760	21,024
PM_{10}	0.0076	10	8,760	666
CO	0.20	10	8,760	17,520
VOC	0.0055	10	8,760	482

For the disposal of the process vent gas only:

PE2 SOx : (2 lb/hr)(24 hr/day) = 48.0 lb-SOx/day
PE2 SOx : (2 lb/hr)(8,760 hr/day) = 17,520 lb-SOx/yr

For the disposal of the SRU startup gas only:

PE2 SOx : (0.00204 lb/MMBtu)(10 MMBtu/hr)(24 hr/day) = 0.5 lb-SOx/day
PE2 SOx : (0.00204 lb/MMBtu)(10 MMBtu/hr)(300 hr/day) = 6.1 lb-SOx/day

The larger of the daily and annual SOx emissions are due to the disposal of the process vent gasses, so those values will be set as the SOx PE values for this unit.

PE2 for Tail Gas Thermal Oxidizer (S-7616-5-0)		
	(lb/day)	**(lb/yr)**
NOx	57.6	21,024
SOx	48.0	17,520
PM_{10}	1.8	666
CO	48.0	17,520
VOC	1.3	482

PE for S-7616-5-0						
	PE (lb/day)	PE fugitives (lb/day	PE total (lb/day)	PE (lb/yr)	PE fugitives (lb/yr)	PE total (lb/yr)
NO_X	57.6	0	57.6	21,024	0	21,024
SO_X	48.0	0	48.0	17,520	0	17,520
PM_{10}	1.8	0	1.8	666	0	666
CO	48.0	34.2	82.2	17,520	57	17,577
VOC	1.3	0.2	1.5	482	12,471	12,953

CO2 Recovery and Vent System (S-7616-8-0)

- Maximum duration of venting episodes: 24 hr/day and cumulative 504 hr/yr
- Maximum flowrate: 656,000 lb/hr (15,150 lbmol/hr) (proposed by applicant)
- Vent stream CO concentration limit: 1,000 ppm-CO (proposed by applicant)
- Vent stream VOC concentration limit: 40 ppm-VOC (proposed by applicant)
- Vent stream H2S concentration limit: 10 ppm-H2S (proposed by applicant)

$PE2_{VOC}$ = (40 scf-VOC/1E6 scf)(lbmol-VOC/379.5 scf-VOC)(16 lb-VOC/lbmol-VOC)(379.5 scf/lbmol)(15,150 lbmol/hr)(24 hr/day)
= 232.7 lb-VOC/day

$PE2_{VOC}$ = (40 scf-VOC/1E6 scf)(lbmol-VOC/379.5 scf-VOC)(16 lb-VOC/lbmol-VOC)(379.5 scf/lbmol)(15,150 lbmol/hr)(504 hr/yr)
= 4,887 lb-VOC/yr

$PE2_{CO}$ = (1,000 scf-CO/1E6 scf)(lbmol-CO/379.5 scf-CO)(28 lb-CO/lbmol-CO)(379.5 scf/lbmol)(15,150 lbmol/hr)(24 hr/day)
= 10,180.8 lb-CO/day

$PE2_{CO}$ = (1,000 scf-CO/1E6 scf)(lbmol-CO/379.5 scf-CO)(28 lb-CO/lbmol-CO)(379.5 scf/lbmol)(15,150 lbmol/hr)(504 hr/yr)
= 213,797 lb-CO/yr

$PE2_{H2S}$ = (10 scf-H2S/1E6 scf)(lbmol-H2S/379.5 scf-H2S)(34 lb-H2S/lbmol-H2S)(379.5 scf/lbmol)(15,150 lbmol/hr)(24 hr/day)
= 123.6 lb-H2S/day

$PE2_{H2S}$ = (10 scf-H2S/1E6 scf)(lbmol- H2S /379.5 scf-H2S)(34 lb-H2S/lbmol-H2S)(379.5 scf/lbmol)(15,150 lbmol/hr)(504 hr/yr)
= 2,596 lb-H2S/yr

Natural Gas-Fired Auxiliary Boiler (S-7616-13-0)

The PE2 for each pollutant is calculated with the following equation:

- PE2 = EF (lb/MMBtu) × Heat Input (MMBtu/hr) × Operating Schedule (hr/day or hr/year)

Pollutant	Daily PE2			
	EF2 (lb/MMBtu)	Heat Input (MMBtu/hr)	Operating Schedule (hr/day)	Daily PE2 (lb/day)
NO_X	0.006	142	24	20.4
SO_X	0.00285	142	24	9.7
PM_{10}	0.0050	142	24	17.0
CO	0.037	142	24	126.1
VOC	0.0040	142	24	13.6

Pollutant	Annual PE2			
	EF2 (lb/MMBtu)	Heat Input (MMBtu/hr)	Operating Schedule (hr/year)	Annual PE2 (lb/year)
NO_X	0.006	142	2,190	1,866
SO_X	0.00285	142	2,190	886
PM_{10}	0.0050	142	2,190	1,555
CO	0.037	142	2,190	11,506
VOC	0.0040	142	2,190	1,244

Diesel-Fired Emergency Engines Powering Electrical Generators (S-7616-14-0 and -15-0)

Daily Post Project Emissions (for Each Engine)					
Pollutant	Emissions Factor (g/bhp-hr)	Rating (bhp)	Daily Hours of Operation (hrs/day)	Conversion (g/lb)	PE2 Total (lb/day)
NO_X	0.5	2922	24	453.6	77.3
SO_X	0.0051	2922	24	453.6	0.8
PM_{10}	0.07	2922	24	453.6	10.8
CO	2.6	2922	24	453.6	402.0
VOC	0.3	2922	24	453.6	46.4

Annual Post Project Emissions (for Each Engine)					
Pollutant	Emissions Factor (g/bhp-hr)	Rating (bhp)	Annual Hours of Operation (hrs/yr)	Conversion (g/lb)	PE2 Total (lb/yr)
NO_X	0.5	2922	50	453.6	161
SO_X	0.0051	2922	50	453.6	2
PM_{10}	0.07	2922	50	453.6	23
CO	2.6	2922	50	453.6	837
VOC	0.3	2922	50	453.6	97

Diesel-Fired Emergency Engine Powering Firewater Pump (S-7616-16-0)

Daily Post Project Emissions (for Engine S-7616-16)					
Pollutant	Emissions Factor (g/bhp-hr)	Rating (bhp)	Daily Hours of Operation (hrs/day)	Conversion (g/lb)	PE2 Total (lb/day)
NO_X	1.5	556	24	453.6	44.1
SO_X	0.0051	556	24	453.6	0.2
PM_{10}	0.01	556	24	453.6	0.3
CO	2.6	556	24	453.6	76.5
VOC	0.14	556	24	453.6	4.1

Annual Post Project Emissions (for Engine S-7616-16)					
Pollutant	Emissions Factor (g/bhp-hr)	Rating (bhp)	Annual Hours of Operation (hrs/yr)	Conversion (g/lb)	PE2 Total (lb/yr)
NO_X	1.5	556	100	453.6	184
SO_X	0.0051	556	100	453.6	1
PM_{10}	0.01	556	100	453.6	1
CO	2.6	556	100	453.6	319
VOC	0.14	556	100	453.6	17

3. Pre-Project Stationary Source Potential to Emit (SSPE1)

Pursuant to Section 4.9 of District Rule 2201, the Pre-Project Stationary Source Potential to Emit (SSPE1) is the Potential to Emit (PE) from all units with valid Authorities to Construct (ATC) or Permits to Operate (PTO) at the Stationary Source and the quantity of emission reduction credits (ERC) which have been banked since September 19, 1991 for Actual Emissions Reductions that have occurred at the source, and which have not been used on-site.

Since this is a new facility, there are no valid ATCs, PTOs, or ERCs at the Stationary Source; therefore, the SSPE1 will be equal to zero.

4. Post Project Stationary Source Potential to Emit (SSPE2)

Pursuant to Section 4.10 of District Rule 2201, the Post Project Stationary Source Potential to Emit (SSPE2) is the Potential to Emit (PE) from all units with valid Authorities to Construct (ATC) or Permits to Operate (PTO) at the Stationary Source and the quantity of emission reduction credits (ERC) which have been banked since September 19, 1991 for Actual Emissions Reductions that have occurred at the source, and which have not been used on-site.

Post-Project Stationary Source Potential to Emit [SSPE2] (lb/year) / with Target and Upper Limits						
Permit Unit		NO_X	SO_X	PM_{10}	CO	VOC
S-7616-1-0		0	0	7,415	0	0
S-7616-2-0		15,552	136	492	14,739	31,236
S-7616-3-0		14,309	237	13	222,348	6
S-7616-4-0		0	0	7,927	0	0
S-7616-5-0		21,024	17,520	666	17,577	12,953
S-7616-6-0		487	742	12	326	5
S-7616-7-0		315	6	8	210	3
S-7616-8-0		0	0	0	213,797	4,887
S-7616-9-0	Target	172,234	56,481	164,739	261,869	53,526
	Upper	335,723	56,481	164,739	311,411	67,563
S-7616-11-0		0	0	7,533	0	0
S-7616-12-0		0	0	32,794	0	0
S-7616-13-0		1,866	886	1,555	11,506	1,244
S-7616-14-0		161	2	23	837	97
S-7616-15-0		161	2	23	837	97
S-7616-16-0		184	1	1	319	17
Post Project SSPE (SSPE2)	Target	226,293	76,013	223,201	744,365	104,071
	Upper	389,782	76,013	223,201	793,907	118,108

5. Major Source Determination

Pursuant to Section 3.24 of District Rule 2201, a Major Source is a stationary source with post-project emissions or a Post Project Stationary Source Potential to Emit (SSPE2), equal to or exceeding one or more of the following threshold values. However, Section 3.24.2 states, "for the purposes of determining major source status, the SSPE2 shall not include the quantity of emission reduction credits (ERC) which have been banked since September 19, 1991 for Actual Emissions Reductions that have occurred at the source, and which have not been used on-site."

Major Source Determination (lb/year)							
		NO_X	SO_X	PM10	PM2.5	CO	VOC
Pre-Project SSPE (SSPE1)		0	0	0	0	0	0
Post Project SSPE (SSPE2)	Target	226,293	76,013	223,201	198,650	744,365	104,071
	Upper	389,782	76,013	223,201	198,650	793,907	118,108
Major Source Threshold		50,000	140,000	140,000	200,000	200,000	50,000
Major Source?		Yes	No	Yes	No *	Yes	Yes

*40 CFR Part 51 - Appendix S requirement for PM2.5

On May 8, 2008 EPA finalized regulations to implement NSR program for PM2.5. The new requirements became effective July 15, 2008. Under the new regulations a major source for PM2.5 is defined as 100 tons/yr. However in determining the PM2.5 emissions only the "front half" or filterable (not condensable) fraction is considered. The calculations in Appendix F of this document indicate that the SSPE for the facility are less than this value, so the facility is not a major source of PM2.5.

6. Baseline Emissions (BE)

BE = Pre-project Potential to Emit for:

- Any unit located at a non-Major Source,
- Any Highly-Utilized Emissions Unit, located at a Major Source,
- Any Fully-Offset Emissions Unit, located at a Major Source, or
- Any Clean Emissions Unit, located at a Major Source.

otherwise,

BE = Historic Actual Emissions (HAE), calculated pursuant to Section 3.22

Since these are new emission units, BE = PE1 = 0 for all criteria pollutants.

7. Major Modification

Major Modification is defined in 40 CFR Part 51.165 as "*any physical change in or change in the method of operation of a major stationary source that would result in a significant net emissions increase of any pollutant subject to regulation under the Act.*"

As discussed in Section VII.C.5 above, the facility is a new Major Source for NOx, PM10, CO, and VOC as a result of this project; therefore the project is not a Major Modification.

8. Federal Major Modification

As shown above, this project does not constitute a Major Modification. Therefore, in accordance with District Rule 2201, Section 3.17, this project does not constitute a Federal Major Modification and no further discussion is required.

VIII. Compliance

Rule 1080 - Stack Monitoring

This Rule grants the APCO the authority to request the installation and use of continuous emissions monitors (CEMs), and specifies performance standards for the equipment and administrative requirements for record keeping, reporting, and notification. The facility will be equipped with operational CEMs for NO_X, CO, and O_2. Provisions included in the operating permit are consistent with the requirements of this Rule. Compliance with the requirements of this Rule is anticipated.

S-7616-9-0 (Combustion Turbine Generator):

Proposed Rule 1080 Conditions:

- The facility shall install and maintain equipment, facilities, and systems compatible with the District's CEM data polling software system and shall make CEM data available to the District's automated polling system on a daily basis. [District Rule 1080]

- Upon notice by the District that the facility's CEM system is not providing polling data, the facility may continue to operate without providing automated data for a maximum of 30 days per calendar year provided the CEM data is sent to the District by a District-approved alternative method. [District Rule 1080]

- Results of the CEM system shall be averaged over a one hour period for NOx emissions and a three hour period for CO emissions using consecutive 15-minute sampling periods in accordance with all applicable requirements of CFR 60.13. [District Rule 4703 and 40 CFR 60.13]

- Results of continuous emissions monitoring shall be reduced according to the procedure established in 40 CFR, Part 51, Appendix P, paragraphs 5.0 through 5.3.3, or by other methods deemed equivalent by mutual agreement with the District, the ARB, and the EPA. [District Rule 1080]

- The owner or operator shall install, certify, maintain, operate and quality-assure a Continuous Emission Monitoring System (CEMS) which continuously measures and records the exhaust gas NO_X, CO and O_2 concentrations. Continuous emissions monitor(s) shall be capable of monitoring emissions during normal operating conditions, and during startups and shutdowns provided the CEMS pass the relative accuracy requirement for startups and shutdowns specified herein. If relative

accuracy of CEMS cannot be demonstrated during startup conditions, CEMS results during startup and shutdown events shall be replaced with startup emission rates obtained from source testing to determine compliance with emission limits contained in this document. [District Rules 1080, 2201 and 4703 and 40 CFR 60.4335(b)(1)]

- APCO or an authorized representative shall be allowed to inspect, as determined to be necessary, the required monitoring devices to ensure that such devices are functioning properly. [District Rule 1080]

- The CEMS shall complete a minimum of one cycle of operation (sampling, analyzing, and data recording) for each successive 15-minute period or shall meet equivalent specifications established by mutual agreement of the District, the ARB and the EPA. [District Rule 1080 and 40 CFR 60.4345(b)]

- Audits of continuous emission monitors shall be conducted quarterly, except during quarters in which relative accuracy and compliance source testing are both performed, in accordance with EPA guidelines. The District shall be notified prior to completion of the audits. Audit reports shall be submitted along with quarterly compliance reports to the District. [District Rule 1080]

- The NO_X, CO and O_2 CEMS shall meet the requirements in 40 CFR 60, Appendix F Procedure 1 and Part 60, Appendix B Performance Specification 2 (PS 2), or shall meet equivalent specifications established by mutual agreement of the District, the ARB, and the EPA. [District Rule 1080 and 40 CFR 60.4345(a)]

- The owner/operator shall perform a relative accuracy test audit (RATA) for the NOx, CO, and O2 CEMs as specified by 40 CFR Part 60, Appendix F, 5.11, at least once every four calendar quarters. The permittee shall comply with the applicable requirements for quality assurance testing and maintenance of the continuous emission monitor equipment in accordance with the procedures and guidance specified in 40 CFR Part 60, Appendix F. [District Rule 1080]

- The permittee shall maintain the following records: date and time, duration, and type of any startup, shutdown, or malfunction; performance testing; evaluations, calibrations, checks, adjustments, any period during which a continuous monitoring system or monitoring device was inoperative, and maintenance of any continuous emission monitor. [District Rules 1080, 2201, and 4703 and 40 CFR 60.8(d)]

- The owner or operator shall submit a written report of CEM operations for each calendar quarter to the APCO. The report is due on the 30th day following the end of the calendar quarter and shall include the following: Time intervals, data and magnitude of excess NO_X emissions, nature and the cause of excess (if known), corrective actions taken and preventative measures adopted; Averaging period used for data reporting corresponding to the averaging period specified in the emission test period and used to determine compliance with an emissions standard; Applicable time and date of each period during which the CEM was inoperative (monitor downtime), except for zero and span checks, and the nature of system repairs and adjustments; a

negative declaration when no excess emissions occurred. [District Rule 1080 and 40 CFR 60.4375(a) and 60.4395]

- The owner or operator shall, upon written notice from the APCO, provide a summary of the data obtained from the CEM systems. This summary shall be in the form and the manner prescribed by the APCO. [District Rule 1080]

Rule 1081 - Source Sampling

This rule requires adequate and safe facilities for using in sampling to determine compliance with emissions limits, and specifies methods and procedures for source testing and sample collection. The requirements of this Rule will be included in the operating permit. Compliance with this Rule is anticipated.

S-7616-9-0 (Combustion Turbine Generator):

Proposed Rule 1081 Conditions:

- The exhaust stack shall be equipped with permanent provisions to allow collection of stack gas samples consistent with EPA test methods and shall be equipped with safe permanent provisions to sample stack gases with a portable NOx, CO, and O2 analyzer during District inspections. The sampling ports shall be located in accordance with the CARB regulation titled California Air Resources Board Air Monitoring Quality Assurance Volume VI, Standard Operating Procedures for Stationary Emission Monitoring and Testing. [District Rule 1081]

- Source testing to measure startup and shutdown NOx, CO, and VOC mass emission rates shall be conducted prior to the end of the commissioning period and at least once every seven years thereafter. CEM relative accuracy shall be determined during startup source testing in accordance with 40 CFR 60, Appendix B. If CEM data is not certifiable to determine compliance with NOx and CO startup emission limits, then source testing to measure startup NOx and CO mass emission rates shall be conducted at least once every 12 months. [District Rule 1081]

- Source testing to measure the NOx, CO, VOC, and NH3 emission rates (lb/hr and ppmvd @ 15% O2) and PM10 emission rate (lb/hr) shall be conducted within 120 days after initial operation and at least once every twelve months thereafter. [District Rules 1081 and 4703 and 40 CFR 60.4400(a)]

- Compliance demonstration (source testing) shall be District witnessed, or authorized and samples shall be collected by a California Air Resources Board certified testing laboratory. Source testing shall be conducted using the methods and procedures approved by the District. The District must be notified 30 days prior to any compliance source test, and a source test plan must be submitted for approval 15 days prior to testing. The results of each source test shall be submitted to the District within 60 days thereafter. [District Rule 1081]

- The following test methods shall be used: NOx - EPA Method 7E or 20, PM10 - EPA Method 5/202 (front half and back half), CO - EPA Method 10 or 10B, O2 - EPA Method 3, 3A, or 20, VOC - EPA Method 18 or 25, and ammonia – EPA Method 206. EPA approved alternative test methods as approved by the District may also be used to address the source testing requirements of this permit. The request to utilize EPA approved alternative source testing methods must be submitted in writing and written approval received from the District prior to the submission of the source test plan. [District Rules 1081 and 4703 and 40 CFR 60.4400(1)(i)]

S-7616-4-0, -11-0, and -12-0 (Cooling Towers):

Proposed Rule 1081 Condition:

- Compliance with PM10 emission limit shall be determined by a blowdown water sample analysis conducted by an independent laboratory within 60 days of initial operation and quarterly thereafter. [District Rule 1081]

Rule 1100 - Equipment Breakdown

This Rule defines a breakdown condition and the procedures to follow if one occurs. The corrective action, the issuance of an emergency variance, and the reporting requirements are also specified.

The requirements of this Rule will be included in the operating permits. Compliance with this Rule is anticipated.

S-7616-9-0 (Combustion Turbine Generator):
Proposed Rule 1100 Conditions:

- Permittee shall notify the District of any breakdown condition as soon as reasonably possible, but no later than one hour after its detection, unless the owner or operator demonstrates to the District's satisfaction that the longer reporting period was necessary. [District Rule 1100, 6.1]

- The District shall be notified in writing within ten days following the correction of any breakdown condition. The breakdown notification shall include a description of the equipment malfunction or failure, the date and cause of the initial failure, the estimated emissions in excess of those allowed, and the methods utilized to restore normal operations. [District Rule 1100, 7.0]

Rule 2010 - Permits Required

This rule requires any person building, altering, or replacing any operation, article, machine, equipment, or other contrivance, the use of which may cause the issuance of air contaminants, to first obtain authorization from the District in the form of an ATC. With the submission of an ATC application, the applicant is complying with the requirements of this rule.

Rule 2201 - New and Modified Stationary Source Review Rule

A. Best Available Control Technology (BACT)

1. BACT Applicability

BACT requirements are triggered on a pollutant-by-pollutant basis and on an emissions unit-by-emissions unit basis for the following*:

a. Any new emissions unit with a potential to emit exceeding two pounds per day,
b. The relocation from one Stationary Source to another of an existing emissions unit with a potential to emit exceeding two pounds per day,
c. Modifications to an existing emissions unit with a valid Permit to Operate resulting in an AIPE exceeding two pounds per day, and/or
d. Any new or modified emissions unit, in a stationary source project, which results in a Major Modification.

*Except for CO emissions from a new or modified emissions unit at a Stationary Source with an SSPE2 of less than 200,000 pounds per year of CO.

a. New emissions units – PE > 2 lb/day

All of the emissions units in this project are new emissions units. The units' PEs are calculated in Section VII.C.2 of this evaluation.

S-7616-9-0 (Combustion Turbine Generator)

As seen in Section VII.C.2 of this evaluation, the applicant is proposing to install a new CTG with a PE greater than 2 lb/day for NO_X, SO_X, PM_{10}, CO, and VOC. BACT is triggered for NO_X, SO_X, PM_{10}, CO, and VOC since the PEs are greater than 2 lb/day and the SSPE2 for CO is greater than 200,000 lb/year, as demonstrated in Section VII.C.5 of this document.

The PE of ammonia is greater than 2.0 pounds per day for the CTG. However, the ammonia emissions are intrinsic to the operation of the SCR system, which is BACT for NOx. The emissions from a control device that is determined by the District to be BACT are not subject to BACT.

S-7616-1-0 (Feedstock Handling and Storage System)

As seen in Section VII.C.2 of this evaluation, the applicant is proposing to install a new Feedstock Handling and Storage System with a PE greater than 2 lb/day for PM10. BACT is triggered for PM10 since the PEs are greater than 2 lb/day.

S-7616-2-0 (Gasifier Refractory Heaters)

As seen in Section VII.C.2 of this evaluation, the applicant is proposing to install a new gasifier refractory heaters with a PE greater than 2 lb/day for NO_X, SO_X, PM_{10}, CO, and VOC. BACT is triggered for NO_X, SO_X, PM_{10}, CO and VOC since the PEs are greater

than 2 lb/day and the SSPE2 for CO is greater than 200,000 lb/year, as demonstrated in Section VII.C.5 of this document.

S-7616-3-0 (Gasification Flare)

As seen in Section VII.C.2 of this evaluation, the applicant is proposing to install a new gasification flare with a PE greater than 2 lb/day for NO_X, SO_X, and CO. BACT is triggered for NO_X, SO_X, and CO since the PEs are greater than 2 lb/day and the SSPE2 for CO is greater than 200,000 lb/year, as demonstrated in Section VII.C.5 of this document.

S-7616-6-0 (Sulfur Recovery Unit Flare)

As seen in Section VII.C.2 of this evaluation, the applicant is proposing to install a new sulfur recovery flare with a PE greater than 2 lb/day for NO_X, SO_X, PM_{10}, and CO. BACT is triggered for NO_X, SO_X, PM_{10}, and CO since the PEs are greater than 2 lb/day and the SSPE2 for CO is greater than 200,000 lb/year, as demonstrated in Section VII.C.5 of this document.

S-7616-7-0 (Emergency Rectisol Flare)

As seen in Section VII.C.2 of this evaluation, the applicant is proposing to install a new Rectisol flare with PEs less than 2 lb/day for all criteria pollutants as demonstrated in Section VII.C.5 of this document. Therefore, BACT is not triggered for any criteria pollutants associated with this unit.

S-7616-4-0 (Gasification Process Area Cooling Tower)
S-7616-11-0 (Air Separation Unit Cooling Tower)
S-7616-12-0 (Power Block Cooling Tower)

As seen in Section VII.C.2 of this evaluation, the applicant is proposing to install three new cooling towers, each with a PE greater than 2 lb/day for PM10. BACT is triggered for PM10 since the PE is greater than 2 lb/day, as demonstrated in Section VII.C.5 of this document.

S-7616-5-0 (Sulfur Recovery System)

As seen in Section VII.C.2 of this evaluation, the applicant is proposing to install a new sulfur recovery system which would result in a PE greater than 2 lb/day for SOx. BACT is triggered for SOx since the PE is greater than 2 lb/day, as demonstrated in Section VII.C.5 of this document.

S-7616-8-0 (CO2 Recovery and Vent System)

As seen in Section VII.C.2 of this evaluation, the applicant is proposing to install a new CO2 recovery and vent system with a PE greater than 2 lb/day for CO and VOC. BACT is triggered for CO and VOC since the PEs are greater than 2 lb/day and the SSPE2 for CO is greater than 200,000 lb/year, as demonstrated in Section VII.C.5 of this document.

S-7616-13-0 (Auxiliary Boiler)

As seen in Section VII.C.2 of this evaluation, the applicant is proposing to install a new natural gas fired auxiliary boiler with a PE greater than 2 lb/day for NO_X, SO_X, PM_{10}, CO, and VOC. BACT is triggered for NO_X, SO_X, PM_{10}, CO, and VOC since the PEs are greater than 2 lb/day and the SSPE2 for CO is greater than 200,000 lb/year, as demonstrated in Section VII.C.5 of this document.

S-7616-14-0 and -15-0 (Emergency Engines Powering Electrical Generators)

As seen in Section VII.C.2 of this evaluation, the applicant is proposing to install two new diesel-fried emergency engines powering electrical generator with a PE greater than 2 lb/day for NO_X, PM_{10}, CO, and VOC. BACT is triggered for NO_X, PM_{10}, CO and VOC since the PEs are greater than 2 lb/day and the SSPE2 for CO is greater than 200,000 lb/year, as demonstrated in Section VII.C.5 of this document.

S-7616-16-0 (Emergency Engine Powering Firewater Pump)

As seen in Section VII.C.2 of this evaluation, the applicant is proposing to install one new diesel-fried emergency engine powering a firewater pump with a PE greater than 2 lb/day for NO_X, PM_{10}, CO, and VOC. BACT is triggered for NO_X, PM_{10}, CO and VOC since the PEs are greater than 2 lb/day and the SSPE2 for CO is greater than 200,000 lb/year, as demonstrated in Section VII.C.5 of this document.

b. Relocation of emissions units – PE > 2 lb/day

As discussed in Section I above, there are no emissions units being relocated from one stationary source to another; therefore BACT is not triggered.

c. Modification of emissions units – AIPE > 2 lb/day

As discussed in Section I above, there are no modified emissions units associated with this project; therefore BACT is not triggered.

d. Major Modification

As discussed in Section VII.C.7 above, this project does not constitute a Major Modification; therefore BACT is not triggered.

2. BACT Guidelines

The BACT Guidelines mentioned below are located in Appendix B of this document.

S-7616-9-0 (Combustion Turbine Generator)

- A new BACT Guideline was developed for this project.

S-7616-1-0 (Feedstock Handling and Storage System)

- BACT Guideline 8.2.1 applies to Petroleum Coke Handling - Receiving, Storage, and Loadout = or > 1,000 tons coke per day.
- BACT Guideline 8.4.1 applies to Dry Material Storage and Conveying Operation, 100 tons/day.
- BACT Guideline 8.4.2 applies to Wet Material Storage and Conveying Operation, 200 tons/day.
- BACT Guideline 8.4.3 applies to Dry Material Handling - Mixing, Blending, Milling, or Storage.

S-7616-2-0 (Gasifier Refractory Heaters)

- A new BACT Guideline was developed for this project.

S-7616-3-0 (Gasification Flare)
S-7616-6-0 (Sulfur Recovery Unit Flare)
S-7616-7-0 (Emergency Rectisol Flare)

- BACT Guideline 1.4.8 (Refinery Flare) applies to the flares.

S-7616-4-0 (Gasification Process Area Cooling Tower):
S-7616-11-0 (Air Separation Unit Cooling Tower):
S-7616-12-0 (Power Block Cooling Tower):

- BACT Guideline 8.3.10 applies to Cooling Tower – Induced Draft, Evaporative Cooling).

S-7616-5-0 (Sulfur Recovery System):

- BACT Guideline 7.2.6 (Petroleum Refineries and Chemical Plants, Sulfur Recovery Plant, = or > 20 tons sulfur/day), applies to the sulfur recovery system.

S-7616-8-0 (CO2 Recovery and Vent System)

- A new BACT Guideline was developed for this project.

S-7616-13-0 (Auxiliary Boiler)

- BACT Guidelines 1.1.1 to 1.1.8 have been rescinded. Please note that BACT Guideline 1.1.2 [Steam Generator ≥ 20 MMBtu/hr] has been rescinded. The NO_X emission limit requirement of District Rule 4320 is lower than the Achieved-in-Practice requirement of BACT Guideline 1.1.2 (9 ppmv @ 3% O2); therefore a project specific BACT analysis will be performed to determine BACT for this project. More details regarding this are provided in the Top-Down BACT Analysis in Appendix C.

S-7616-14-0 and -15-0 (Emergency Engines Powering Electrical Generators)

- BACT Guideline 3.1.1 (Emergency Diesel IC Engine), applies to the diesel-fired emergency IC engines.

S-7616-16-0 (Emergency Engine Powering Firewater Pump)

- BACT Guideline 3.1.1 (Emergency Diesel IC Engine), applies to the diesel-fired emergency IC engine.

3. Top-Down BACT Analysis

Per Permit Services Policies and Procedures for BACT, a Top-Down BACT analysis shall be performed as a part of the application review for each application subject to the BACT requirements pursuant to the District's NSR Rule.

Pursuant to the attached Top-Down BACT Analysis (see Appendix C), BACT has been satisfied with the following:

S-7616-9-0 (Combustion Turbine Generator)

NOx (target):	2.0 ppmvd-NOx @ 15% O_2 (3-hour rolling average) or 2.5 ppmvd @ 15% O_2 (1-hour average), except during startup/shutdown.
NOx (max):	4.0 ppmvd-NOx @ 15% O_2 (3-hour rolling average), except during startup/shutdown
SOx:	PUC-regulated natural gas or non-PUC regulated natural with no more than 0.75 grains-S/100 dscf, or 0.0003 lb-SOx/MMBtu when firing on hydrogen-rich fuel
CO (target):	3.0 ppmvd-CO @ 15% O2 when firing on hydrogen-rich fuel exclusively and 4.0 ppmvd-CO @ 15% O2 when firing on fuel containing natural gas

CO (max): 3.0 ppmvd-CO @ 15% O2 when firing on hydrogen-rich fuel exclusively and 5.0 ppmvd-CO @ 15% O2 when firing on fuel containing natural gas

VOC (target): 1.0 ppmvd-VOC @ 15% O2 when firing on hydrogen-rich fuel exclusively and 1.5 ppmvd @ 15% O2 when firing on fuel containing natural gas

VOC (max): 1.0 ppmvd-VOC @ 15% O2 when firing on hydrogen-rich fuel exclusively and 2.0 ppmvd @ 15% O2 when firing on fuel containing natural gas

PM_{10}: Air inlet cooler/filter, lube oil vent coalescer (or equal), and either PUC-regulated natural gas, non-PUC regulated gas with no more than 0.75 grains-S/100 dscf, or 0.0003 lb-SOx/MMBtu when firing on hydrogen-rich fuel exclusively.

S-7616-1-0 (Feedstock Handling and Storage System)

PM_{10}: Petroleum coke handling: adequate moisture content of coke received, and loaded out, to prevent visible emissions in excess of 5% opacity. Water and surfactant applied to storage piles.

Dry material handling: mixer, augers, elevators, conveyors all enclosed and vented to a fabric filter baghouse.

Dry material storage and conveying operation: storage, augers, elevators, conveyors all enclosed and vented to a fabric filter baghouse.

Wet material storage and conveying operation: enclosed storage with sufficient moisture so visible emissions are less than 5% opacity from any single emission point.

S-7616-2-0 (Gasifier Refractory Heaters)

NOx: PUC-quality natural gas firing, good combustion practices, and total refractory heater operation limited to 1,200 hours per calendar year per heater.

VOC: PUC-quality natural gas firing, good combustion practices, and total refractory heater operation limited to 1,200 hours per calendar year per heater.

CO: PUC-quality natural gas firing, good combustion practices, and total refractory heater operation limited to 1,200 hours per calendar year per heater.

PM_{10}: PUC-quality natural gas firing, good combustion practices, and total refractory heater operation limited to 1,200 hours per calendar year per heater.

S-7616-3-0 (Gasification Flare)
S-7616-6-0 (Sulfur Recovery Unit Flare)

CO: Engineered flare, with air or steam assisted combustion, staged combustion, and/or equivalent District approved controls. Flare shall be equipped with a flare gas recovery system for non-emergency releases or equivalent District approved controls.

NOx: Engineered flare or enclosed burner with air or steam assisted combustion, staged combustion, and/or equivalent District approved controls, and having demonstrated emissions of NOx or less than 0.068 lb/MMBtu. Flare shall be equipped with a flare gas recovery system for non-emergency releases or equivalent District approved controls.

PM_{10}: Engineered flare designed for and operated without visible emissions, except as allowed by 40CFR 60.18(c)(1) and District Rule 4101 and equipped with air or steam assisted combustion, staged combustion, and/or equivalent District approved controls. Flare shall be equipped with a flare gas recovery system for non-emergency releases or equivalent District approved controls. Pilot and sweep fuel shall be natural gas, treated refinery gas or LPG.

SOx: Flare shall be equipped with a flare gas recovery system for non-emergency releases or equivalent District approved controls. Pilot and purge gas shall be natural gas, treated refinery gas or LPG.

VOC: Enclosed ground level flare or any other engineered flare designed with a VOC destruction efficiency of ≥ 98.5%. Flare design shall include air or steam assisted combustion, staged combustion, and/or equivalent District approved controls. Flare shall be equipped with a flare gas recovery system for non-emergency releases or equivalent District approved controls, a continuous pilot or District approved alternative and a method for detecting flame. Pilot and sweep fuel shall be natural gas, treated refinery gas or LPG.

S-7616-4-0 (Gasification Process Area Cooling Tower):
S-7616-11-0 (Air Separation Unit Cooling Tower):
S-7616-12-0 (Power Block Cooling Tower):

PM_{10}:	Cellular-type drift eliminator

S-7616-5-0 (Sulfur Recovery System):

SOx:	Sulfur recovery unit with tail gas treating unit to treat gas to = or < 10 ppmv H2S (based on a three-hour, moving average) and a standby incinerator, except during startup and shutdown

S-7616-8-0 (CO2 Recovery and Vent System)

CO and VOC:	Capture, compression, and transportation of the exhaust stream in a pipeline for injection (during normal operation); venting allowed when transportation system is unavailable due to upset condition up to 504 hr per rolling 12-month period.

S-7616-13-0 (Auxiliary Boiler)

VOC:	PUC-quality natural gas firing
SOx:	PUC-quality natural gas firing
NOx:	5 ppmvd @ 3% O_2
CO:	PUC-quality natural gas firing
PM_{10}:	PUC-quality natural gas firing

S-7616-14-0 and -15-0 (Emergency Engines Powering Electrical Generators)
S-7616-16-0 (Emergency Engine Powering Firewater Pump)

CO:	Latest EPA Tier Certification level for applicable horsepower range
NOx:	Latest EPA Tier Certification level for applicable horsepower range
PM_{10}:	0.15 g/hp-hr or the Latest EPA Tier Certification level for applicable horsepower range, whichever is more stringent. (ATCM)
SOx:	Very low sulfur diesel fuel (15 ppmw sulfur or less)
VOC:	Latest EPA Tier Certification level for applicable horsepower range

B. Offsets

1. Offset Applicability

Pursuant to Section 4.5.3, offset requirements shall be triggered on a pollutant by pollutant basis and shall be required if the Post Project Stationary Source Potential to Emit (SSPE2) equals to or exceeds the offset threshold levels in Table 4-1 of Rule 2201.

The following table compares the post-project facility-wide annual emissions in order to determine if offsets will be required for this project.

Offset Determination (lb/year)					
	NO_X	SO_X	PM_{10}	CO	VOC
Post Project SSPE (SSPE2)	389,782	76,013	223,201	793,907	118,108
Offset Threshold	20,000	54,750	29,200	200,000	20,000
Offsets triggered?	Yes	Yes	Yes	Yes	Yes

2. Quantity of Offsets Required

As seen above, the SSPE2 is greater than the offset thresholds for NOx, SOx, PM10, CO, and VOC; therefore offset calculations will be required for this project.

Per Sections 4.7.2 and 4.7.3, the quantity of offsets in pounds per year for NO_X is calculated as follows for sources with an SSPE1 less than the offset threshold levels before implementing the project being evaluated.

Offsets Required (lb/year) = [(SSPE2 – ROT + ICCE) x DOR]

Where,
SSPE2 = Post Project Stationary Source Potential to Emit
ROT = Respective Offset Threshold, for the respective pollutant indicated in Section 4.5.3.
ICCE = Increase in Cargo Carrier Emissions
DOR = Distance Offset Ratio, determined pursuant to Section 4.8

Per Section 4.6.2, emergency equipment that is used exclusively as emergency standby equipment for electrical power generation or any other emergency equipment as approved by the APCO that does not operate more than 200 hours per year of non-emergency purposes and is not used pursuant to voluntary arrangements with a power supplier to curtail power, is exempt from providing emission offsets. Therefore, permit units S-7616-14, -15, and -16 for emergency IC engines will be exempt from providing offsets and the emissions associated with this permit unit contributing to the SSPE2 should be removed prior to calculating actual offset amounts.

Offsets Required (lb/year) = [(SSPE2 – Emergency Equipment – ROT + ICCE) x DOR]

Emission Reduction Certificates Proposed (lb/qtr)					
Pollutant	**Certificate**	**1st Quarter**	**2nd Quarter**	**3rd Quarter**	**4th Quarter**
NOx	ERC #S-3273-2	120,500	120,500	120,500	120,500
NOx	ERC #C-1058-2	10,100	10,100	10,100	10,100
NOx	ERC #C-1059-2 (Future 5/11)	21,900	21,900	21,900	21,900
SOx	ERC #S-3275-5	42,000	42,000	42,000	42,000
SOx	ERC #C-1058-5	24,500	24,500	24,500	24,500
SOx	ERC#C-1059-5 (Future 5/11)	70,500	70,500	70,500	70,500
VOC	ERC #S-3305-1	14,625	14,625	14,625	14,625
VOC	ERC #S-3306-1 (Future 2/11)	11,437.5	11,437.5	11,437.5	11,437.5
VOC	ERC #S-3306-1 (Future 4/11)	7,937.5	7,937.5	7,937.5	7,937.5

NOx Offsets Required:

SSPE2 (NO_X) = 389,782 lb/year

Emergency Equipment:
S-7616-14-0 (NO_X) = 161 lb/year
S-7616-15-0 (NO_X) = 161 lb/year
S-7616-16-0 (NO_X) = 184 lb/year

Respective offset threshold (NO_X) = 20,000 lb/year

ICCE = 0 lb/year

Offsets Required (lb/yr) = [(389,782 - 161 -161 - 184 - 20,000 + 0) x DOR]
= 369,276 x DOR

Calculating the appropriate quarterly emissions to be offset is as follows (in lb/qtr without distance ratio) is calculated by dividing the annual offsets required by four:

1st Quarter	2nd Quarter	3rd Quarter	4th Quarter
92,319	92,319	92,319	92,319

The applicant has stated that the facility plans to use ERC certificate S-3273-2, C-1058-2, and C-1059-2, which have an original site of reduction greater than 15 miles from the location of this project. Therefore, an offset ratio of 1.5:1 is applicable and the amount of NO_X ERCs that need to be withdrawn is:

Offsets Required (lb/year) = 369,276 x 1.5
= 553,914 lb-NO_X/year

Calculating the appropriate quarterly emissions to be offset is as follows (in lb/qtr):

1st Quarter	2nd Quarter	3rd Quarter	4th Quarter
138,479	138,479	138,479	138,479

The applicant has stated that the facility plans to use ERC certificates S-3273-2, C-1058-2, and C-1059-2 to offset the increases in NO_X emissions associated with this project. The above certificates have available quarterly NO_X credits as follows:

(lb/qtr)	1st Quarter	2nd Quarter	3rd Quarter	4th Quarter
ERC #S-3273-2	120,500	120,500	120,500	120,500
ERC #C-1058-2	10,100	10,100	10,100	10,100
ERC #C-1059-2	21,900	21,900	21,900	21,900
Total	152,500	152,500	152,500	152,500

As seen above, the facility has sufficient credits to fully offset the quarterly NO_X emissions increases associated with this project.

SOx Offsets Required:

SSPE2 (SOx) = 76,013 lb/year

Emergency Equipment:
S-7616-14-0 (SOx) = 2 lb/year
S-7616-15-0 (SOx) = 2 lb/year
S-7616-16-0 (SOx) = 2 lb/year

Respective offset threshold (SOx) = 20,000 lb/year

ICCE = 0 lb/year

Offsets Required (lb/yr) = [(76,013 - 2 - 2 -1 - 54,750 + 0) x DOR]
= 21,258 x DOR

Calculating the appropriate quarterly emissions to be offset is as follows:

1st Quarter	2nd Quarter	3rd Quarter	4th Quarter
5,315	5,315	5,315	5,315

The applicant has stated that the facility plans to use ERC certificate S-3275-5, C-1058-5, and C-1059-5, which have an original site of reduction greater than 15 miles from the location of this project. Therefore, an offset ratio of 1.5:1 is applicable and the amount of SO_X ERCs that need to be withdrawn is:

Offsets Required (lb/year) = 21,258 x 1.5
= 31,887 lb SO_X/year

Calculating the appropriate quarterly emissions to be offset is as follows (in lb/qtr):

1st Quarter	2nd Quarter	3rd Quarter	4th Quarter
7,972	7,972	7,972	7,972

The applicant has stated that the facility plans to use ERC certificates S-3275-5, C-1058-5, and C-1059-5 to offset the increases in SO_X emissions associated with this project. The above certificates have available quarterly SO_X credits as follows:

(lb/qtr)	1st Quarter	2nd Quarter	3rd Quarter	4th Quarter
ERC # S-3275-5	42,000	42,000	42,000	42,000
ERC # C-1058-5	24,500	24,500	24,500	24,500
ERC # C-1059-5 (Future)	70,500	70,500	70,500	70,500
Total:	137,000	137,000	137,000	137,000

As seen above, the facility has sufficient credits to fully offset the quarterly SO_X emissions increases associated with this project.

Additionally, the applicant plans to satisfy their offset requirements for PM10 reductions by providing SOx reductions in place of PM10 reductions. Per Rule 2201 Section 4.13.3.2, interpollutant offsets between PM10 and PM10 precursors (i.e. SOx) may be allowed. The applicant is proposing to use the District-approved interpollutant ratio of 1:1 of SOx offsets for PM10.

As is shown in the table below, there will be sufficient SOx credits to fully offset the quarterly SOx and PM10 increases associate with this project.

(lb/qtr)	1st Quarter	2nd Quarter	3rd Quarter	4th Quarter
Total ERCs available:	137,000	137,000	137,000	137,000
SOx ERCs required:	7,972	7,972	7,972	7,972
PM10 ERCs required:	72,733	72,733	72,733	72,733
Total ERCs required:	80,705	80,705	80,705	80,705

PM10 Offsets Required:

SSPE2 (PM10) = 223,201 lb/year

Emergency Equipment:
S-7616-14-0 (PM10) = 23 lb/year
S-7616-15-0 (PM10) = 23 lb/year
S-7616-16-0 (PM10) = 1 lb/year

Respective offset threshold (PM10) = 29,200 lb/year

ICCE = 0 lb/year

Offsets Required (lb/yr) = [(223,201 - 23 -23 - 1 - 29,200 + 0) x DOR]
= 193,954 x DOR

Calculating the appropriate quarterly emissions to be offset is as follows:

1st Quarter	2nd Quarter	3rd Quarter	4th Quarter
48,489	48,489	48,489	48,489

As explained in the SOx offset section above, the applicant has stated that the facility plans to use SOx reductions to offset PM10 emission as allowed by the District Rule 2201 Section 4.13.3.2, at a District-approved interpollutant ratio of 1:1 of SOx offsets for PM10. The applicant propose to use SOx ERC certificates S-3275-5, C-1058-5, and C-1059-5, which have an original site of reduction greater than 15 miles from the location of this project. Therefore, an offset ratio of 1.5:1 is applicable and the amount of ERCs that need to be withdrawn is:

Offsets Required (lb/year) = 193,954 x 1.5
= 290,931 lb-PM10/year

Calculating the appropriate quarterly emissions to be offset is as follows (in lb/qtr):

1st Quarter	2nd Quarter	3rd Quarter	4th Quarter
72,733	72,733	72,733	72,733

As is shown in the table below, there will be sufficient SOx credits to fully offset the quarterly SOx and PM10 increases associate with this project.

(lb/qtr)	1st Quarter	2nd Quarter	3rd Quarter	4th Quarter
Total ERCs available:	137,000	137,000	137,000	137,000
SOx ERCs required:	7,972	7,972	7,972	7,972
PM10 ERCs required:	72,733	72,733	72,733	72,733
Total ERCs required:	80,705	80,705	80,705	80,705

VOC Offsets Required:

SSPE2 (VOC) = 118,108 lb/year

Emergency Equipment:
S-7616-14-0 (VOC) = 97 lb/year
S-7616-15-0 (VOC) = 97 lb/year
S-7616-16-0 (VOC) = 17 lb/year
Respective offset threshold (VOC) = 20,000 lb/year

ICCE = 0 lb/year

Offsets Required (lb/yr) = [(118,108 - 97 -97 - 17 - 20,000 + 0) x DOR]
= 97,897 x DOR

Calculating the appropriate quarterly emissions to be offset is as follows (in lb/qtr without distance ratio):

1st Quarter	2nd Quarter	3rd Quarter	4th Quarter
24,474	24,474	24,474	24,474

The applicant has stated that the facility plans to use ERC certificate S-3305-1 and a portions of certificate S-3306-1 which will be secured later, which have an original site of reduction less than 15 miles of the location of this project. Therefore, an offset ratio of 1.3:1 is applicable (for major sources), and the amount of VOC ERCs that need to be withdrawn is:

Offsets Required (lb/year) = 97,897 x 1.3
= 127, 266 lb VOC/year

Calculating the appropriate quarterly emissions to be offset is as follows (in lb/qtr):

1st Quarter	2nd Quarter	3rd Quarter	4th Quarter
31,817	31,817	31,817	31,817

As seen above, the facility has sufficient credits to fully offset the quarterly VOC emissions increases associated with this project.

The applicant has stated that the facility plans to use ERC certificates S-3305-1 and portions of S-3306-1 in the future to offset the increases in VOC emissions associated with this project. The above certificates have available quarterly VOC credits as follows:

(lb/qtr)	1st Quarter	2nd Quarter	3rd Quarter	4th Quarter
ERC #S-3305-1	14,625	14,625	14,625	14,625
ERC #S-3306-1 (future)	11,437.5	11,437.5	11,437.5	11,437.5
ERC #S-3306-1 (future)	7,937.5	7,937.5	7,937.5	7,937.5
Total	34,000	34,000	34,000	34,000

As seen above, the facility has sufficient credits to fully offset the quarterly VOC emissions increases associated with this project.

CO Offsets Required:

CO offsets are triggered by CO emissions in excess of 200,000 lb/year for the facility. As shown previously, the SSPE2 for CO, after this project, is 793,201 lb/year, so offset requirements are triggered.

However, pursuant to Section 4.6.1, "Emission Offsets shall not be required for the following: increases in carbon monoxide in attainment areas if the applicant demonstrates to the satisfaction of the APCO, that the Ambient Air Quality Standards are not violated in the areas to be affected, and such emissions will be consistent with Reasonable Further Progress, and will not cause or contribute to a violation of Ambient Air Quality Standards (AAQS)."

The Technical Services Section of the San Joaquin Valley Unified Air Pollution Control District performed a CO modeling run, using the EPA AERMOD air dispersion model, to determine if the CO emissions from the new facility would exceed the State and Federal AAQS (in Appendix H). Modeling of the worst case 1 hour and 8 hour CO impacts were performed. These values were added to the worst case ambient concentration (background) measured and compared to the ambient air quality standards. Results of the modeling are presented below:

Ambient Modeling Results for CO		
	1 hr std	**8 hr std**
AAQS (ug/m^3)	23,000	10,000
Worst case ambient (background) (ug/m^3)	4078	2563
Facility totals (ug/m^3)	6479	3103

This modeling demonstrates that the proposed increase in CO emissions will not cause a violation of the CO ambient air quality standards. Therefore, the increase in CO emissions is exempt from offsets pursuant to Rule 2201 Section 4.6.1.

Proposed Rule 2201 (offset) Conditions:

- Prior to initial operation of S-7616-2, -3, -5, -6, -7, -9, and -13, permittee shall provide NO_X emission reduction credits for the following quantity of emissions: 1st quarter: 92,319 lb, 2nd quarter: 92,319 lb, 3rd quarter: 92,319 lb, and fourth quarter: 92,319 lb. Offsets shall be provided at the applicable offset ratio specified in Table 4-2 of Rule 2201 (as amended 9/21/06). [District Rule 2201]

- Prior to initial operation of S-7616-2, -3, -5, -6, -7, -9, and -13, permittee shall provide SO_X emission reduction credits for the following quantity of emissions: 1st quarter: 5,315 lb, 2nd quarter: 5,315 lb, 3rd quarter: 5,315 lb, and fourth quarter: 5,315 lb. Offsets shall be provided at the applicable offset ratio specified in Table 4-2 of Rule 2201 (as amended 9/21/06). [District Rule 2201]

- Prior to initial operation of S-7616-1 through -7 and -9 through -13, permittee shall provide PM10 emission reduction credits for the following quantity of emissions: 1st quarter: 48,489 lb, 2nd quarter: 48,489 lb, 3rd quarter: 48,489 lb, and fourth quarter: 48,489 lb. Offsets shall be provided at the applicable offset ratio specified in Table 4-2 of Rule 2201 (as amended 9/21/06). SOx ERCs may be used to offset PM10 increases at an interpollutant ratio of 1.0 lb-SOx: 1.0 lb-PM10. [District Rule 2201]

- Prior to initial operation of S-7616-2, -3, -5 through -9, and -13, permittee shall provide VOC emission reduction credits for the following quantity of emissions: 1st quarter: 31,817 lb, 2nd quarter: 31,817 lb, 3rd quarter: 31,817 lb, and fourth quarter: 31,817 lb. Offsets shall be provided at the applicable offset ratio specified in Table 4-2 of Rule 2201 (as amended 9/21/06). [District Rule 2201]

- ERC certificate numbers C-1058-2, C-1058-5, C-1059-2, S-3275-5, S-3273-2, S-3305-1, and/or S-3306-1 (or a certificate split from these certificates) shall be used to supply the required offsets, unless a revised offsetting proposal is received and approved by the District, upon which this Authority to Construct shall be reissued, administratively specifying the new offsetting proposal. Original public noticing requirements, if any, shall be duplicated prior to reissuance of this Demonstration of Compliance. [District Rule 2201]

C. Public Notification

1. Applicability

Public noticing is required for:

a. Any new Major Source, which is a new facility that is also a Major Source,
b. Major Modifications,
c. Any new emissions unit with a Potential to Emit greater than 100 pounds during any one day for any one pollutant,
d. Any project which results in the offset thresholds being surpassed, and/or
e. Any project with an SSIPE of greater than 20,000 lb/year for any pollutant.

a. New Major Source

New Major Sources are new facilities, which are also Major Sources. As shown in Section VII.C.5 above, the SSPE2 is greater than the Major Source threshold for NO_X, PM10, CO, and VOC. Therefore, public noticing is required for this project for new Major Source purposes because this facility is becoming a new Major Source.

b. Major Modification

As demonstrated in VII.C.7, this project does not constitute a Major Modification; therefore, public noticing for Major Modification purposes is not required.

c. PE > 100 lb/day

As demonstrated in VII.C.7, this project, this project consists of several emissions units with a Potential to Emit greater than 100 pounds during any one day for any one pollutant. Therefore, public noticing for PE > 100 lb/day purposes is required.

d. Offset Threshold

The following table compares the SSPE1 with the SSPE2 in order to determine if any offset thresholds have been surpassed with this project.

Offset Threshold				
Pollutant	SSPE1 (lb/yr)	SSPE2 (lb/yr) - Maximum	Offset Threshold	Public Notice Required?
NO_X	0	389,782	20,000 lb/year	Yes
SO_X	0	76,013	54,750 lb/year	Yes
PM_{10}	0	223,201	29,200 lb/year	Yes
CO	0	793,907	200,000 lb/year	Yes
VOC	0	118,108	20,000 lb/year	Yes

As detailed above, offset thresholds were surpassed for NO_X, PM10, CO, VOC with this project; therefore public noticing is required for offset purposes.

e. SSIPE > 20,000 lb/year

Public notification is required for any permitting action that results in a Stationary Source Increase in Permitted Emissions (SSIPE) of more than 20,000 lb/year of any affected pollutant. According to District policy, the SSIPE is calculated as the Post Project Stationary Source Potential to Emit (SSPE2) minus the Pre-Project Stationary Source Potential to Emit (SSPE1), i.e. SSIPE = SSPE2 – SSPE1. The values for SSPE2 and SSPE1 are calculated according to Rule 2201, Sections 4.9 and 4.10, respectively. The SSIPE is compared to the SSIPE Public Notice thresholds in the following table:

Stationary Source Increase in Permitted Emissions [SSIPE] – Public Notice					
Pollutant	SSPE2 (lb/yr) - Maximum	SSPE1 (lb/yr)	SSIPE (lb/yr)	SSIPE Public Notice Threshold	Public Notice Required?
NO_x	389,782	0	389,782	20,000 lb/year	Yes
SO_x	76,013	0	76,013	20,000 lb/year	Yes
PM_{10}	223,201	0	223,201	20,000 lb/year	Yes
CO	793,907	0	793,907	20,000 lb/year	Yes
VOC	118,108	0	118,108	20,000 lb/year	Yes

As demonstrated above, the SSIPEs for NO_X, SO_X, PM10, CO, and VOC were greater than 20,000 lb/year; therefore public noticing for SSIPE purposes is required.

2. Public Notice Action

As discussed above, public noticing is required for this project for new major source, PE in excess of 100 lb/day, offset threshold being surpassed, and SSIPE greater than 20,000 lb/year. The District shall public notice this project according to the requirements of Section 5.5.

D. Daily Emission Limits (DELs)

Daily Emissions Limitations (DELs) and other enforceable conditions are required by Section 3.15 to restrict a unit's maximum daily emissions, to a level at or below the emissions associated with the maximum design capacity. Per Sections 3.15.1 and 3.15.2, the DEL must be contained in the latest ATC and contained in or enforced by the latest PTO and enforceable, in a practicable manner, on a daily basis. DELs are also required to enforce the applicability of BACT.

<u>S-7616-9-0 (Combined Cycle Combustion Turbine Generator)</u>

- Emission rates from the combustion turbine generator, except during startup and shutdown periods, shall not exceed any of the following: NOx (as NO2) – 21.0 lb/hr and 2.0 ppmvd-NOx @ 15% O_2 (3-hour rolling average) or 2.5 ppmvd @ 15% O_2 (1-hour average), (except during startup/shutdown); VOC (as methane) – 5.5 lb/hr and 1.0 ppmvd-VOC @ 15% O2 when firing on hydrogen-rich fuel exclusively and 1.5 ppmvd @ 15% O2 when firing on fuel containing natural gas; CO – 25.6 lb/hr and 3.0 ppmvd-CO @ 15% O2 when firing on hydrogen-rich fuel exclusively and 4.0 ppmvd-CO @ 15% O2 when firing on fuel containing natural gas; PM10 – 19.8 lb/hr; or SOx (as SO2) – 6.8 lb/hr. The hourly rolling averages for NOx (as NO2) emission limits indicated above. All other pollutant emission limits are three-hour rolling averages. [District Rules 2201 and 4703 and 40 CFR 60.4320(a) & (b)]

- Daily emissions (target level) from the CTG shall not exceed any of the following limits: NOx (as NO2) – 910.5 lb/day; VOC – 1,026.3 lb/day; CO – 6,058.2 lb/day; PM10 – 472.0 lb/day; or SOx (as SO2) – 163.2 lb/day. [District Rule 2201]

- Daily emissions (upper level) from the CTG shall not exceed any of the following limits: NOx (as NO2) – 910.5 lb/day; VOC – 1,026.3 lb/day; CO – 6,058.2 lb/day; PM10 – 472.0 lb/day; or SOx (as SO2) – 163.2 lb/day. [District Rule 2201]

- Ammonia (NH3) emissions shall not exceed either of the following limits: 19.4 lb/hr or 5 ppmvd @ 15% O2 (based on a 24 hour rolling average). [District Rules 2201 and 4102]

As is explained earlier, the permittee has been granted flexibility for the NOx, CO, and VOC BACT limits for the combustion turbine generator since the proposed technology is unproven in a similar application. The following conditions will be added to allow for this flexibility:

- Note on NOx, CO, and VOC BACT limits: The applicant proposed to meet emission limits of 4.0 ppmvd-NOx @ 15% O_2, 3.0 ppmvd-CO @ 15% O2 when firing on hydrogen-rich fuel exclusively and 5.0 ppmvd-CO @ 15% O2 when firing on fuel containing natural gas, and 1.0 ppmvd-VOC @ 15% O2 when firing on hydrogen-rich fuel exclusively and 2.0 ppmvd @ 15% O2 when firing on fuel containing natural (except during startup/shutdown) as these are vendor guaranteed emission rates. The applicant has also agreed to the installation of additional selective catalytic reduction and oxidation catalytic controls on the combustion turbine generator to reduce NOx emissions to a target level of 2.0 ppmvd-NOx @ 15% O_2 (3-hour rolling average) or 2.5 ppmvd @ 15% O_2 (1-hour average) and 3.0 ppmvd-CO @ 15% O2 when firing on hydrogen-rich fuel exclusively and 4.0 ppmvd-CO @ 15% O2 when firing on fuel containing natural gas, and 1.0 ppmvd-VOC @ 15% O2 when firing on hydrogen-rich fuel exclusively and 1.5 ppmvd @ 15% O2 when firing on fuel containing natural gas (except during startup/shutdown). Target levels have not yet been successfully demonstrated on combustion turbine generators that require burner technology to fire hydrogen-rich fuel. Therefore, if per the District's determination, any of the control technologies do not perform satisfactorily during the initial trial period or experiences repeated failures that are not the result of improper operation, that technology will not be deemed BACT for the particular installation. [District Rule 2201]

- Emissions from the unit in excess of lower targeted NOx, CO, and VOC limits shall not constitute a violation of this permit provided that NOx, CO, and VOC emissions are limited to the lowest achievable emission rate to satisfy BACT. BACT for NOx, CO, and VOC from this unit shall consist of all other emission limitations and operational and design conditions contained in this permit. The final BACT level for NOx, CO, and VOC shall be determined to the satisfaction of the Air Pollution Control Officer in accordance with District Rule 2201 and the District's BACT policy, after 24 months of operating history and a successful compliance source test. [District Rule 2201]

- If NOx, CO, and VOC emissions from the unit continue to exceed the lower targeted emissions limits after the 24-month BACT determination period, the permittee shall have 90 days to submit a report containing all monitoring and source test information to the District. The report shall also include an explanation of the steps taken to operate and maintain the combustion turbine generator in such a manner as to minimize any of the emissions exceeding the lower limits and a detailed analysis of all factors that prohibit compliance with the lower emissions limit. In the report, the permittee may also propose a final BACT emission limit for the pollutant exceeding the lower limit for inclusion in this permit. The monitoring data and source test information gathered in accordance with this permit may be shared with other technical experts so their input can be considered when determining the final BACT limits that can be consistently achieved. [District Rule 2201]

- The District shall establish the final BACT limit for NOx, CO, and VOC, including any applicable averaging periods, and revise the applicable limits contained in the permit within 90 days of the successful completion of the BACT determination period or receipt of the report from the permittee. Within 30 days of receipt of the District's determination, the permittee shall submit an Authority to Construct application to incorporate the revised emissions limit(s). In no case shall the final BACT emission limitation(s) be higher than 4.0 ppmvd-NOx @ 15% O_2, 3.0 ppmvd-CO @ 15% O2 when firing on hydrogen-rich fuel exclusively and 5.0 ppmvd-CO @ 15% O2 when firing on fuel containing natural gas, and 1.0 ppmvd-VOC @ 15% O2 when firing on hydrogen-rich fuel gas exclusively and 2.0 ppmvd @ 15% O2 when firing on fuel containing natural (except during startup/shutdown). If emissions do not exceed the higher limits, the unit shall be allowed to continue to operate after the BACT evaluation period has ended and before the new Authority to Construct permit has been issued. [District Rule 2201]

- If the unit demonstrates reasonably reliable compliance with any of the emissions limit of 2.0 ppmvd-NOx @ 15% O_2 (3-hour rolling average) or 2.5 ppmvd@ 15% O_2 (1-hour average), 1.0 ppmvd-VOC @ 15% O2 when firing on hydrogen-rich fuel exclusively and 1.5 ppmvd @ 15% O2 when firing on fuel containing natural gas, or 3.0 ppmvd-CO @ 15% O2 when firing on hydrogen-rich fuel exclusively and 4.0 ppmvd-CO @ 15% O2 when firing on fuel containing natural gas (except during startup/shutdown) during the BACT evaluation period, any of those limits shall be deemed BACT for the installation. [District Rule 2201]

S-7616-1-0 (Feedstock Handling and Storage System)

- PM10 emission rate from the feedstock handling and storage system shall not exceed 42.4 lb/day. [District Rule 2201]

S-7616-2-0 (Gasifier Refractory Heaters)

- Refractory heater emission rates shall not exceed any of the following: PM10: 0.0076 lb/MMBtu; SOx (as SO2): 0.0021 lb/MMBtu; NOx (as NO2): 0.24 lb/MMBtu; VOC: 0.068 lb/MMBtu; or CO: 0.035 lb/MMBtu. Daily records of fuel use, fuel heat content, and resulting daily heat rate input shall be kept, to demonstrate compliance with emission limits during refractory curing. [District Rule 2201]

- Refractory heaters' combined heat input shall not exceed 864 MMBtu/day. [District Rule 2201]

- Refractory heater shall only be fired on PUC-regulated natural gas. [District Rule 2201]

- Fugitive VOC emission rate from the permit unit shall not exceed 73.5 lb/day based on the component count and emission factors from EPA document Protocol for Equipment Leak Emission Estimates (EPA-453/R-95-017), Table 2-1, SOCMI Average Emissions Factors and the applicable control efficiency for those components subject to a leak detection and repair (LDAR) program. Components serving the following streams associated with this permit unit shall be subject to a leak detection and repair (LDAR) program: methanol, propylene, H2S-laden methanol, CO2-laden methanol, and acid gas. The following control efficiencies in Table 5-2 of the EPA document shall apply to those components under an LDAR program: gas valves: 92%; light liquid valves: 88%; light liquid pump seals: 75%; and connectors: 93%. [District Rule 2201]

- Fugitive CO emission rate from the permit unit shall not exceed 32.5 lb/day based on the component count, CO percentage in the fluid stream, VOC emission factors from Protocol for Equipment Leak Emission Estimates (EPA-453/R-95-017), Table 2-1, SOCMI Average Emissions Factors and the applicable control efficiency for those components subject to a leak detection and repair (LDAR) program. [District Rule 2201]

S-7616-3-0 (Gasification Flare)

- Maximum amount of gas combusted in flare shall not exceed 91,500 MMBtu/day of unshifted gas nor 105,400 MMBtu/day of shifted gas. Permittee shall maintain records of amount of gas combusted, gas type, and reason for flaring event. [District Rule 2201]

- Emissions from the flare shall not exceed any of the following (based on total gas combusted): PM10: 0.0 lb/MMBtu; NOx (as NO2): 0.068 lb/MMBtu; VOC: 0.0 lb/MMBtu; or CO: 0.37 lb/MMBtu when flaring shifted gas and CO: 2.0 lb/MMBtu when flaring unshifted gas. [District Rule 2201]

- SOx emissions (as SO2) shall not exceed 113.9 lb/day. [District Rule 2201]

- The sulfur content of the gas flared shall be limited 0 ppmv, except during combustion turbine generator washes, which will be limited to no more than 5 ppmv. [District Rule 2201]

- Permittee shall record the sulfur content and the quantity of gas flared and shall demonstrate compliance with the SOx emission limit. [District Rule 2201]

S-7616-6-0 (Sulfur Recovery Unit Flare)

- Total flaring shall be limited to 40 hr/yr. [District Rule 2201]

- Emissions from the flare shall not exceed any of the following (based on total gas combusted): PM10: 0.03 lb/MMBtu; NOx (as NO2): 0.12 lb/MMBtu; VOC: 0.0013 lb/MMBtu; or CO: 0.08 lb/MMBtu. [District Rule 2201]

- SOx emissions (as SO2) shall not exceed 18.4 lb/hr. [District Rule 2201]

S-7616-7-0 (Emergency Rectisol Flare)

- This flare shall be operated solely for emergency situations. [District Rule 2201]

- Emissions from the flare pilot shall not exceed any of the following: PM10: 0.03 lb/MMBtu; NOx (as NO2): 0.12 lb/MMBtu; VOC: 0.0013 lb/MMBtu; or CO: 0.08 lb/MMBtu. [District Rule 2201]

S-7616-4-0 (Gasification Process Area Cooling Tower):

- PM10 emission rate from the cooling tower shall not exceed 22.9 lb/day. [District Rule 2201]

S-7616-11-0 (Air Separation Unit Cooling Tower):

- PM10 emission rate from the cooling tower shall not exceed 21.7 lb/day. [District Rule 2201]

S-7616-12-0 (Power Block Cooling Tower):

- PM10 emission rate from the cooling tower shall not exceed 94.6 lb/day. [District Rule 2201]

S-7616-5-0 (Sulfur Recovery System):

- Emission rates from the tail gas thermal oxidizer shall not exceed the following: NOx: 0.24 lb/MMBtu; CO: 0.20 lb/MMBtu; VOC: 0.0055 lb/MMBtu; PM10: 0.0076 lb/MMBtu. [District Rule 2201]

- SOx (as SOx) emissions from the tail gas thermal oxidizer shall not exceed 0.0204 MMBtu/hr for the disposal of SRU startup gas nor 2 lb/hr for the disposal of the process vent gas. [District Rule 2201]

- Fugitive VOC emission rate from the permit unit shall not exceed 34.2 lb/day based on the component count and emission factors from EPA document Protocol for Equipment Leak Emission Estimates (EPA-453/R-95-017), Table 2-1, SOCMI Average Emissions Factors. [District Rule 2201]

- Fugitive CO emission rate from the permit unit shall not exceed 0.2 lb/day based on the component count, CO percentage in the fluid stream, VOC emission factors from Protocol for Equipment Leak Emission Estimates (EPA-453/R-95-017), Table 2-1, SOCMI Average Emissions Factors and the applicable control efficiency for those components subject to a leak detection and repair (LDAR) program. [District Rule 2201]

S-7616-8-0 (CO2 Recovery and Vent System)

- Maximum flowrate of vent stream shall not exceed 656,000 lb/hr, and vent stream concentration of the shall not exceed 1,000 ppm-CO, 40 ppm-VOC, nor 10 ppm-H2S. [District Rule 2201]

- Venting shall only be allowed when transportation system is unavailable due to upset conditions, and such conditions shall not exceed 504 hours per rolling 12-month period. [District Rule 2201]

- Emission rates from the vent stream shall not exceed 232.7 lb-VOC/day nor 10,180.8 lb-CO/day. [District Rule 2201]

S-7616-13-0 (Auxiliary Boiler)

- {2968} Emissions rates from the natural gas-fired unit shall not exceed any of the following limits: 5 ppmv NO_X @ 3% O_2 or 0.006 lb-NO_X/MMBtu; 0.00285 lb-SO_X/MMBtu; 0.005 lb-PM10/MMBtu; 50.8 ppmv CO @ 3% O_2 or 0.037 lb-CO/MMBtu; or 0.004 lb-VOC/MMBtu. [District Rules 2201, 4305, and 4306]

- {2964} The unit shall only be fired on PUC-regulated natural gas. [District Rule 2201]

S-7616-14-0 and -15-0 (Emergency Engines Powering Electrical Generators)

- {edited 3485} Emissions from this IC engine shall not exceed any of the following limits: 0.5 g-NOx/bhp-hr, 2.6 g-CO/bhp-hr, or 0.3 g-VOC/bhp-hr. [District Rule 2201 and 13 CCR 2423 and 17 CCR 93115]

- {edited 3486} Emissions from this IC engine shall not exceed 0.07 g-PM10/bhp-hr based on USEPA certification using ISO 8178 test procedure. [District Rules 2201 and 4102 and 13 CCR 2423 and 17 CCR 93115]

S-7616-16-0 (Emergency Engine Powering Firewater Pump)

- {edited 3485} Emissions from this IC engine shall not exceed any of the following limits: 1.5 g-NOx/bhp-hr, 2.6 g-CO/bhp-hr, or 0.14 g-VOC/bhp-hr. [District Rule 2201 and 13 CCR 2423 and 17 CCR 93115]

- {edited 3486} Emissions from this IC engine shall not exceed 0.01 g-PM10/bhp-hr based on USEPA certification using ISO 8178 test procedure. [District Rules 2201 and 4102 and 13 CCR 2423 and 17 CCR 93115]

E. Compliance Assurance

1. Source Testing

Combined Cycle Combustion Turbine Generator (S-7616-9-0):

District Rule 4703 requires NO_X and CO emission testing on an annual basis. The District Source Test Policy (APR 1705) requires annual testing for all pollutants controlled by catalysts. The control equipment will include a SCR system and an oxidation catalyst. Ammonia slip is an indicator of how well the SCR system is performing and PM_{10} emissions are a good indicator of how well the inlet air cooler/filter are performing. Therefore, source testing for NO_X, VOC, CO, PM_{10}, and ammonia slip will be required within 120 days of initial operation and at least once every 12 months thereafter.

Also, initial source testing of NO_X, CO, and VOC startup emissions will be required for the CTG initially and not less than every seven years thereafter. If CEM data is not certifiable to determine compliance with NO_X and CO startup emission limits, then source testing to measure startup NO_X and CO mass emission rates shall be conducted at least once every 12 months. This testing will serve two purposes: to validate the startup emission estimates used in the emission calculations and to verify that the CEMs accurately measure startup emissions.

The CTG will be equipped with CEMs for NO_X, CO, and O_2. The CEM will have two ranges to allow accurate measurements of NO_X and CO emissions during startup. The CEMs must meet the installation, performance, relative accuracy, and quality assurance requirements specified in 40 CFR 60.13 and Appendix B (referenced in the CEM requirements of Rule 4703) and the acid rain requirements in 40 CFR Part 75.

40 CFR Part 60 subpart KKKK requires fuel nitrogen content testing. The District will accept the NO_X source testing required by District Rule 4703 as equivalent to fuel nitrogen content testing.

40 CFR Part 60 subpart KKKK requires that fuel sulfur content be monitored. Refer to the monitoring section of this document for a discussion of the fuel sulfur testing requirements.

Diesel-Fired Emergency Engines (S-7616-14, -15, -16):

Pursuant to District Policy APR 1705, source testing is not required for emergency IC engines to demonstrate compliance with Rule 2201.

2. Monitoring

Combined Cycle Combustion Turbine Generator (S-7616-9-0):

Monitoring of NO_X emissions is required by District Rule 4703. The applicant has proposed a CEMS for NO_X.

CO monitoring is not specifically required by any applicable Rule or Regulation. Nevertheless, due to erratic CO emission concentrations during start-up and shutdown periods, it is necessary to limit the CO emissions on a pound per hour basis. Therefore, a CO CEMS is necessary to show compliance with the CO limits of this permit. The applicant has proposed a CO CEMS.

40 CFR Part 60 Subpart KKKK requires monitoring of the fuel consumption. Fuel consumption monitoring will be required.

40 CFR Part 60 Subpart KKKK requires monitoring of the fuel nitrogen content. As stated in the Subpart KKKK compliance section of this document, the District will allow the annual NO_X source test to substitute for this requirement.

40 CFR Part 60 Subpart KKKK requires monitoring of the fuel sulfur content. The gas supplier, Pacific Gas & Electric (PG&E), may deliver gas with a sulfur content of up to 1.0 gr/scf. Since the sulfur content of the natural gas would not exceed this value, it is District practice to require initial weekly testing for eight consecutive weeks and semi-annual fuel sulfur content testing thereafter if the fuel sulfur content remains below 1.0 gr/scf. Therefore, fuel sulfur content testing is required.

Cooling Towers (S-7616-4-0, 11-0, -12-0):

District Rule 7012 requires hexavalent chromium concentration testing to be conducted at least once every six (6) months for non-wooden cooling towers subject to Section 5.2.3 of the rule. Since the cooling tower has never had hexavalent chromium containing compounds added to the circulating water, this unit is exempt from the monitoring requirements of the rule. Therefore, no monitoring will be required for this permit unit.

3. Recordkeeping

Recordkeeping is required to demonstrate compliance with the offset, public notification and daily emission limit requirements of Rule 2201.

Combined Cycle Combustion Turbine Generator (S-7616-9-0):

The applicant will be required to keep records of all of the parameters that are required to be monitored. Refer to section VIII.E.2 of this document for a discussion of the parameters that will be monitored.

Diesel-Fired Emergency Engines (S-7616-14, -15, -16):

Recordkeeping is required to demonstrate compliance with the offset, public notification, and daily emission limit requirements of Rule 2201. As required by District Rule 4702, *Stationary Internal Combustion Engines - Phase 2*, this IC engine is subject to recordkeeping requirements. Recordkeeping requirements, in accordance with District Rule 4702, will be discussed in Section VIII, *District Rule 4702*, of this evaluation.

Cooling Towers (S-7616-4-0, 11-0, -12-0):

District Rule 7012 requires any person subject to Sections 5.2.2 and 5.2.3 of the rule to keep records of all circulating water tests performed. As discussed above, the cooling tower is exempt from the monitoring/testing requirements of the rule. Therefore, no recordkeeping will be required for these permit units.

4. Reporting

Combined Cycle Combustion Turbine Generator (S-7616-9-0):

40 CFR Part 60 Subpart KKKK requires that the facility report the use of fuel with a sulfur content of more than 0.8% by weight. Such reporting will be required.

40 CFR Part 60 Subpart KKKK requires the reporting of exceedances of the NO_X emission limit of the permit. Such reporting will be required.

Cooling Towers (S-7616-4-0, 11-0, -12-0):

District Rule 7012 requires the facility submit a compliance plan to the APCO at least 90 days before the newly constructed cooling tower is operated. Such reporting will be required.

F. Ambient Air Quality Analysis

Section 4.14.1 of this Rule requires that an ambient air quality analysis (AAQA) be conducted for the purpose of determining whether a new or modified Stationary Source will cause or make worse a violation of an air quality standard. The Technical Services Division of the SJVAPCD conducted the required analysis. Refer to Appendix H of this document for the AAQA summary sheet.

The proposed location is in an attainment area for NO_X, CO, PM10, and SO_X. As shown by the AAQA summary sheet the proposed equipment will not cause a violation of an air quality standard for NO_X, CO, PM10, or SO_X.

The results from the Criteria Pollutant Modeling are as follows:

Criteria Pollutant Modeling Results*

	1 Hour	3 Hours	8 Hours.	24 Hours	Annual
CO	Pass	X	Pass	X	X
NO_x	Pass[2]	X	X	X	Pass
SO_x	Pass	Pass	X	Pass	Pass
PM_{10}	X	X	X	Pass[1]	Pass[1]

*Results were taken from the attached PSD spreadsheet.
[1]The criteria pollutants are below EPA's level of significance as found in 40 CFR Part 51.165 (b)(2).
[2]The NO_2 emissions have bee evaluated under the federal 1-hour standard of 100ppb or 188.68 ug/m^3.

As shown, the calculated contribution of emissions will not exceed the EPA significance level. This project is not expected to cause or make worse a violation of an air quality standard.

G. Compliance Certification

Section 4.15.2 of this rule requires the owner of a new Major Source or a source undergoing a Major Modification to demonstrate to the satisfaction of the District that all other Major Sources owned by such person and operating in California are in compliance or are on a schedule for compliance with all applicable emission limitations and standards. As discussed in Sections VIII-Rule 2201-C.1.a, this facility is a new major source, therefore this requirement is applicable.

Prior to the issuance of the Final Determination of Compliance, the permittee has committed to providing a statewide certification of compliance to show compliance with these requirements. See the permittee's letter in Appendix G.

Additionally, Section 4.15.1 of the rule requires the owner of a new Major Source or a source undergoing a Major Modification to demonstrate to the satisfaction of the District that for those sources for which an analysis of alternative sites, sizes, and production processes is required under Section 173 of the Federal Clean Air Act, the applicant shall prepare an analysis functionally equivalent to the requirements of Division 13, Section 21000 et. seq. of the Public Resources Code. Such demonstration from the AFC is also included in Appendix G of this document.

Rule 2520 - Federally Mandated Operating Permits

Since this facility's emissions exceed the major source thresholds of District Rule 2201, this facility is a major source. Pursuant to Rule 2520 Section 5.1, and as required by permit condition, the facility will have up to 12 months from the date of ATC issuance to either submit a Title V Application or comply with District Rule 2530 (Federally Enforceable Potential to Emit).

- {3487} This facility will have up to 12 months from the date of issuance of this Permit to Operate (PTO) to either submit a Title V application or comply with District Rule 2530 - Federally Enforceable Potential to Emit. [District Rule 2520]

Rule 2540 - Acid Rain Program

The proposed CTG is subject to the acid rain program as a phase II unit, i.e. it will be installed after 11/15/90 and it has a generator nameplate rating greater than 25 MW.

The acid rain program will be implemented through a Title V operating permit. Federal regulations require submission of an acid rain permit application at least 24 months before the later of 1/1/2000 or the date the unit expects to generate electricity. The facility anticipates beginning commercial operation after the subject date.

The acid rain program requirements for this facility are relatively minimal. Monitoring of the NO_X and SO_X emissions and a relatively small quantity of SO_X allowances (from a national SO_X allowance bank) will be required as well as the use of a NO_X CEM.

Proposed Rule 2540 Condition:

- Permittee shall submit an application to comply with SJVUAPCD District Rule 2540 - Acid Rain Program. [District Rule 2540]

Rule 2550 - Federally Mandated Preconstruction Review for Major Sources of Air Toxics

Section 2.0 states, "*The provisions of this rule shall only apply to applications to construct or reconstruct a major air toxics source with Authority to Construct issued on or after June 28, 1998.*" The applicant has provided the following analysis for Noncriteria pollutants/HAPs.

Noncriteria pollutants are compounds that have been identified as pollutants that pose a significant health hazard. Nine of these pollutants are regulated under the Federal New Source Review program: lead, asbestos, beryllium, mercury, fluorides, sulfuric acid mist, hydrogen sulfide, total reduced sulfur, and reduced sulfur compounds.[8]

In addition to these nine compounds, the federal Clean Air Act lists 189 substances as potential hazardous air pollutants (Clean Air Act Sec. 112(b)(1)). Any pollutant that may be emitted from the project and is on the federal New Source Review List and the federal Clean Air Act list has been evaluated.

As is shown in the Hazardous Air Pollutant Summary in Appendix I, emissions of each individual HAP are below 10 tons per year and total HAP emissions are below 25 tons per year. Therefore, this stationary source will not be a major air toxics source and the provisions of this rule do not apply.

To ensure this source is not a major air toxics source, the following conditions will be listed on the permit:

- Hazardous Air Pollutant (HAP) emissions shall not exceed 25 tpy all HAPS or 10 tpy any single HAP. [District Rule 4002]

[8] These pollutants are regulated under federal and state air quality programs; however, they are evaluated as noncriteria pollutants by the California Energy Commission (CEC).

- Permittee shall conduct an initial speciated HAPS and total VOC source test for the combustion turbine generator, by District witnessed in situ sampling of exhaust gases by a qualified independent source test firm. The permittee shall correlate the total HAPs emissions rate and the single highest HAP emission rate to the VOC mass emission determined during the speciated HAPs source test. Initial and annual compliance with the HAPs emissions limit (25 tpy all HAPs or 10 tpy any single HAP) shall be demonstrated by the combined VOC emissions rates for the combustion gas turbine determined during initial and annual compliance source testing and the correlation between VOC emissions and HAP(s). [District Rule 4002]

Rule 4001 - New Source Performance Standards (NSPS)

40 CFR 60 – Subpart GG
S-7616-9-0 (Combustion Turbine Generator):

40 CFR Part 60 Subpart GG applies to all stationary gas turbines with a heat input greater than 10.7 gigajoules per hour (10.2 MMBtu/hr), that commence construction, modification, or reconstruction after October 3, 1977. Therefore, the requirements of this subpart apply to the proposed CTG.

40 CFR 60 Subpart KKKK, Section 60.4305(a), states that this subpart applies to all stationary gas turbines with a heat input greater than 10.7 gigajoules (10 MMBtu) per hour, which commenced construction, modification, or reconstruction after February 18, 2005. Therefore, the requirements of this subpart apply to the proposed CTG.

40 CFR 60 Subpart KKKK, Section 60.4305(b), states that stationary combustion turbines regulated under this subpart are exempt from the requirements of 40 CFR 60 Subpart GG. As discussed above, 40 CFR 60 Subpart KKKK is applicable to the proposed turbine. Therefore, it is exempt from the requirements of 40 CFR 60 Subpart GG and no further discussion is required.

40 CFR 60 – Subpart KKKK
S-7616-9-0 (Combustion Turbine Generator):

40 CFR Part 60 Subpart KKKK applies to all stationary gas turbines rated at greater than or equal to 10 MMBtu/hr that commence construction, modification, or reconstruction after February 18, 2005. Therefore, the requirements of this subpart apply to the proposed CTG.

Subpart KKKK established requirements for nitrogen oxide (NO_X) and sulfur dioxide (SO_X) emissions.

Section 60.4320 - Standards for Nitrogen Oxides:

Paragraph (a) states that NO_X emissions shall not exceed the emission limits specified in Table 1 of this subpart. Paragraph (b) states that if you have two or more turbines that are connected to a single generator, each turbine must meet the emission limits for NO_X. Table 1 states that new turbines firing natural gas with a combustion turbine heat input at peak load of greater than

850 MMBtu/hr shall meet a NO_X emissions limit of 15 ppmvd @ 15% O_2 or 54 ng/J of useful output (0.43 lb/MWh). Table 1 also states that new turbines firing fuel other than natural gas with a combustion turbine heat input at peak load of greater than 850 MMBtu/hr shall meet a NO_X emissions limit of 42 ppmvd @ 15% O_2 or 1604 ng/J of useful output (1.3 lb/MWh).

The proposed combustion turbine generator's NO_X emission concentration will be limit to the following emissions limits:

NOx (target): 2.0 ppmvd-NOx @ 15% O_2 (3-hour rolling average) or 2.5 ppmvd@ 15% O_2 (1-hour average), except during startup/shutdown.

NOx (max): 4.0 ppmvd-NOx @ 15% O_2 (3-hour rolling average), except during startup/shutdown

Therefore, the proposed turbine will be operating in compliance with the NO_X emission requirements of this subpart. The following condition will ensure continued compliance with the requirements of this section:

- Emission rates from the combustion turbine generator, except during startup and shutdown periods, shall not exceed any of the following: NOx (as NO2) – 21.0 lb/hr and 2.0 ppmvd-NOx @ 15% O_2 (3-hour rolling average) or 2.5 ppmvd @ 15% O_2 (1-hour average), (except during startup/shutdown); VOC (as methane) – 5.5 lb/hr and 1.0 ppmvd-VOC @ 15% O2 when firing on hydrogen-rich fuel exclusively and 1.5 ppmvd @ 15% O2 when firing on fuel containing natural gas; CO – 25.6 lb/hr and 3.0 ppmvd-CO @ 15% O2 when firing on hydrogen-rich fuel exclusively and 4.0 ppmvd-CO @ 15% O2 when firing on fuel containing natural gas; PM10 – 19.8 lb/hr; or SOx (as SO2) – 6.8 lb/hr. The hourly rolling averages for NOx (as NO2) emission limits indicated above. All other pollutant emission limits are three-hour rolling averages. [District Rules 2201 and 4703 and 40 CFR 60.4320(a) & (b)]

<u>Section 60.4330 - Standards for Sulfur Dioxide:</u>

Paragraph (a) states that a turbine located in a continental area must comply with one of the following:

(1) Operator must not cause to be discharged into the atmosphere from the subject stationary combustion turbine any gases which contain SO_2 in excess of 110 nanograms per Joule (ng/J) (0.90) pounds per megawatt-hour (lb/MWh)) gross output; or
(2) Operator must not burn in the subject stationary combustion turbine any fuel which contains total potential sulfur emissions in excess of 26 ng SO_2/J (0.060 lb SO_2/MMBtu) heat input. If the turbine simultaneously fires multiple fuels, each fuel must meet this requirement.

The applicant is proposing to burn natural gas fuel with a maximum sulfur content of 0.75 grain/ 100 scf (12 ppm-SO2 or 0.0021 lb-SO2/MMBtu), and hydrogen-rich gas with a maximum sulfur content of 5 ppm-SO2. Therefore, the proposed turbines will be operating in compliance with

the SO_X emission requirements of this section. The following condition will ensure continued compliance with the requirements of this section:

- This unit shall exclusively burn PUC-regulated natural gas with a sulfur content no greater than 0.75 grains of sulfur compounds (as S) per 100 dry scf of natural gas, hydrogen-rich fuel with a sulfur content no greater than 5 ppmv, or a combination of both fuels. [District Rule 2201 and 40 CFR 60.4330(a)(2)]

Section 60.4335 – NO_X Compliance Demonstration, with Water or Steam Injection:

Paragraph (a) states that when a turbine is using water or steam injection to reduce NO_X emissions, the permittee must install, calibrate, maintain and operate a continuous monitoring system to monitor and record the fuel consumption and the ratio of water or steam to fuel being fired in the turbine when burning a fuel that requires water or steam injection for compliance.

Paragraph (b) states that alternatively, an operator may use continuous emission monitoring, as follows:

(1) Install, certify, maintain and operate a continuous emissions monitoring system (CEMS) consisting of a NO_X monitor and a diluent gas (oxygen (O_2) or carbon dioxide (CO_2)) monitor, to determine hourly NO_X emission rate in parts per million (ppm) or pounds per million British thermal units (lb/MMBtu); and
(2) For units complying with the output-based standard, install, calibrate, maintain and operate a fuel flow meter (or flow meters) to continuously measure the heat input to the affected unit; and
(3) For units complying with the output based standard, install, calibrate, maintain and operate a watt meter (or meters) to continuously measure the gross electrical output of the unit in megawatt-hours; and
(4) For combined heat and power units complying with the output-based standard, install, calibrate, maintain and operate meters for useful recovered energy flow rate, temperature, and pressure, to continuously measure the total thermal energy output in British thermal units per hour (Btu/hr).

The applicant proposes a turbine that utilizes steam injection. They are proposing to install, certify, maintain and operate a CEMS consisting of a NO_X monitor and an O_2 monitor to determine hourly NO_X emission rate in ppm. They are not proposing to comply with the output-based NO_X emission standards listed in Table 1. Therefore, the proposed CEMS satisfies the requirements of this section. The following condition will ensure continued compliance with the requirements of this section:

- The turbine shall be equipped with a continuous monitoring system to measure and record fuel consumption. [District Rules 2201 and 4703 and 40 CFR 60.4335(b)(1)]

- The owner or operator shall install, certify, maintain, operate and quality-assure a Continuous Emission Monitoring System (CEMS) which continuously measures and records the exhaust gas NO_X, CO and O_2 concentrations. Continuous emissions monitor(s) shall be capable of monitoring emissions during normal operating conditions, and during startups and shutdowns provided the CEMS pass the relative

accuracy requirement for startups and shutdowns specified herein. If relative accuracy of CEMS cannot be demonstrated during startup conditions, CEMS results during startup and shutdown events shall be replaced with startup emission rates obtained from source testing to determine compliance with emission limits contained in this document. [District Rules 1080, 2201 and 4703 and 40 CFR 60.4335(b)(1)]

Section 60.4340 – NO_X Compliance Demonstration, without Water or Steam Injection:

This section specifies the requirements for units not equipped with water or steam injection. As discussed above, the applicant is proposing to use steam injection to reduce NO_X emissions in each of these turbines. Therefore, the requirements of this section are not applicable and no further discussion is required.

Section 60.4345 – CEMS Equipment Requirements:

Paragraph (a) states that each NO_X diluent CEMS must be installed and certified according to Performance Specification 2 (PS 2) in appendix B to this part, except the 7-day calibration drift is based on unit operating days, not calendar days. With state approval, Procedure 1 in appendix F to this part is not required. Alternatively, a NO_X diluent CEMS that is installed and certified according to appendix A of part 75 of this chapter is acceptable for use under this subpart. The relative accuracy test audit (RATA) of the CEMS shall be performed on a lb/MMBtu basis.

Paragraph (b) states that as specified in §60.13(e)(2), during each full unit operating hour, both the NO_X monitor and the diluent monitor must complete a minimum of one cycle of operation (sampling, analyzing, and data recording) for each 15-minute quadrant of the hour, to validate the hour. For partial unit operating hours, at least one valid data point must be obtained with each monitor for each quadrant of the hour in which the unit operates. For unit operating hours in which required quality assurance and maintenance activities are performed on the CEMS, a minimum of two valid data points (one in each of two quadrants) are required for each monitor to validate the NO_X emission rate for the hour.

Paragraph (c) states that each fuel flowmeter shall be installed, calibrated, maintained, and operated according to the manufacturer's instructions. Alternatively, with state approval, fuel flowmeters that meet the installation, certification, and quality assurance requirements of appendix D to part 75 of this chapter are acceptable for use under this subpart.

Paragraph (d) states that each watt meter, steam flow meter, and each pressure or temperature measurement device shall be installed, calibrated, maintained, and operated according to manufacturer's instructions.

Paragraph (e) states that the owner or operator shall develop and keep on-site a quality assurance (QA) plan for all of the continuous monitoring equipment described in paragraphs (a), (c), and (d) of this section. For the CEMS and fuel flow meters, the owner or operator may, with state approval, satisfy the requirements of this paragraph by implementing the QA program and plan described in section 1 of appendix B to part 75 of this chapter.

The permittee will be required to install and operate a NO_X CEMS in accordance with the requirements of this section. As discussed above, the permittee is not required to install a fuel flow meter, watt meter, steam flow meter, or a pressure or temperature measurement device to comply with the requirements of this subpart. Therefore, the proposed turbines will be operating in compliance with the requirements of this section. The following conditions will ensure continued compliance with the requirements of this section:

- The NO_X, CO and O_2 CEMS shall meet the requirements in 40 CFR 60, Appendix F Procedure 1 and Part 60, Appendix B Performance Specification 2 (PS 2), or shall meet equivalent specifications established by mutual agreement of the District, the ARB, and the EPA. [District Rule 1080 and 40 CFR 60.4345(a)]

- The CEMS shall complete a minimum of one cycle of operation (sampling, analyzing, and data recording) for each successive 15-minute period or shall meet equivalent specifications established by mutual agreement of the District, the ARB and the EPA. [District Rule 1080 and 40 CFR 60.4345(b)]

Section 60.4350 – CEMS Data and Excess NO_X Emissions:

Section 60.4350 states that for purposes of identifying excess emissions:

(a) All CEMS data must be reduced to hourly averages as specified in §60.13(h).

(b) For each unit operating hour in which a valid hourly average, as described in §60.4345(b), is obtained for both NO_X and diluent monitors, the data acquisition and handling system must calculate and record the hourly NO_X emission rate in units of ppm or lb/MMBtu, using the appropriate equation from method 19 in appendix A of this part. For any hour in which the hourly average O_2 concentration exceeds 19.0 percent O_2 (or the hourly average CO_2 concentration is less than 1.0 percent CO_2), a diluent cap value of 19.0 percent O_2 or 1.0 percent CO_2 (as applicable) may be used in the emission calculations.

(c) Correction of measured NO_X concentrations to 15 percent O_2 is not allowed.

(d) If you have installed and certified a NO_X diluent CEMS to meet the requirements of part 75 of this chapter, states can approve that only quality assured data from the CEMS shall be used to identify excess emissions under this subpart. Periods where the missing data substitution procedures in subpart D of part 75 are applied are to be reported as monitor downtime in the excess emissions and monitoring performance report required under §60.7(c).

(e) All required fuel flow rate, steam flow rate, temperature, pressure, and megawatt data must be reduced to hourly averages.

(f) Calculate the hourly average NO_X emission rates, in units of the emission standards under §60.4320, using either ppm for units complying with the concentration limit or the equations 1 (simple cycle turbines) or 2 (combined cycle turbines) listed in §60.4350, paragraph (f).

HECA is proposing to monitor the NO_X emissions rates from the turbine with a CEMS. The CEMS system will be used to determine if, and when, any excess NO_X emissions are released

to the atmosphere from the turbine exhaust stacks. The CEMS will be operated in accordance with the methods and procedures described above. Therefore, the proposed turbines will be operating in compliance with the requirements of this section. The following condition will ensure continued compliance with the requirements of this section:

- Results of continuous emissions monitoring shall be reduced according to the procedure established in 40 CFR, Part 51, Appendix P, paragraphs 5.0 through 5.3.3, or by other methods deemed equivalent by mutual agreement with the District, the ARB, and the EPA. [District Rule 1080]

Section 60.4355 – Parameter Monitoring Plan:

This section sets fourth the requirements for operators that elect to continuously monitor parameters in lieu of installing a CEMS for NO_X emissions. As discussed above, HECA is proposing to install CEMS on the turbine that will directly measure NO_X emissions. Therefore, the requirements of this section are not applicable and no further discussion is required.

Sections 60.4360, 60.4365 and 60.4370 – Monitoring of Fuel Sulfur Content:

Section 60.4360 states that an operator must monitor the total sulfur content of the fuel being fired in the turbine, except as provided in §60.4365. The sulfur content of the fuel must be determined using total sulfur methods described in §60.4415. Alternatively, if the total sulfur content of the gaseous fuel during the most recent performance test was less than half the applicable limit, ASTM D4084, D4810, D5504, or D6228, or Gas Processors Association Standard 2377 (all of which are incorporated by reference, see §60.17), which measure the major sulfur compounds, may be used.

Section 60.4365 states that an operator may elect not to monitor the total sulfur content of the fuel combusted in the turbine, if the fuel is demonstrated not to exceed potential sulfur emissions of 26 ng SO_2/J (0.060 lb SO_2/MMBtu) heat input for units located in continental areas and 180 ng SO_2/J (0.42 lb SO_2/MMBtu) heat input for units located in noncontinental areas or a continental area that the Administrator determines does not have access to natural gas and that the removal of sulfur compounds would cause more environmental harm than benefit. One of the following sources of information must be used to make the required demonstration:

(a) The fuel quality characteristics in a current, valid purchase contract, tariff sheet or transportation contract for the fuel, specifying that the maximum total sulfur content for oil use in continental areas is 0.05 weight percent (500 ppmw) or less and 0.4 weight percent (4,000 ppmw) or less for noncontinental areas, the total sulfur content for natural gas use in continental areas is 20 grains of sulfur or less per 100 standard cubic feet and 140 grains of sulfur or less per 100 standard cubic feet for noncontinental areas, has potential sulfur emissions of less than less than 26 ng SO_2/J (0.060 lb SO_2/MMBtu) heat input for continental areas and has potential sulfur emissions of less than less than 180 ng SO_2/J (0.42 lb SO_2/MMBtu) heat input for noncontinental areas; or

(b) Representative fuel sampling data which show that the sulfur content of the fuel does not exceed 26 ng SO_2/J (0.060 lb SO_2/MMBtu) heat input for continental areas or 180

ng SO_2/J (0.42 lb SO_2/MMBtu) heat input for noncontinental areas. At a minimum, the amount of fuel sampling data specified in section 2.3.1.4 or 2.3.2.4 of appendix D to part 75 of this chapter is required.

HECA is proposing to operate the turbine on natural gas fuel with a maximum sulfur content of 0.75 grain/ 100 scf (12 ppm-SO2 or 0.0021 lb-SO2/MMBtu), and hydrogen-rich gas with a maximum sulfur content of 5 ppm-SO2. The following condition will ensure continued compliance with the requirements of this section:

- This unit shall exclusively burn PUC-regulated natural gas with a sulfur content no greater than 0.75 grains of sulfur compounds (as S) per 100 dry scf of natural gas, hydrogen-rich fuel with a sulfur content no greater than 5 ppmv, or a combination of both fuels. [District Rule 2201 and 40 CFR 60.4330(a)(2)]

Section 60.4370 states that the frequency of determining the sulfur content of the fuel must be as follows:

(a) *Fuel oil.* For fuel oil, use one of the total sulfur sampling options and the associated sampling frequency described in sections 2.2.3, 2.2.4.1, 2.2.4.2, and 2.2.4.3 of appendix D to part 75 of this chapter (*i.e.*, flow proportional sampling, daily sampling, sampling from the unit's storage tank after each addition of fuel to the tank, or sampling each delivery prior to combining it with fuel oil already in the intended storage tank).

(b) *Gaseous fuel.* If you elect not to demonstrate sulfur content using options in §60.4365, and the fuel is supplied without intermediate bulk storage, the sulfur content value of the gaseous fuel must be determined and recorded once per unit operating day.

(c) *Custom schedules.* Notwithstanding the requirements of paragraph (b) of this section, operators or fuel vendors may develop custom schedules for determination of the total sulfur content of gaseous fuels, based on the design and operation of the affected facility and the characteristics of the fuel supply. Except as provided in paragraphs (c)(1) and (c)(2) of this section, custom schedules shall be substantiated with data and shall be approved by the Administrator before they can be used to comply with the standard in §60.4330.

When actually required to physically monitor the sulfur content in the fuel burned in the turbine, the District and EPA have previously approved a custom monitoring schedule of at least one per week. Then, if compliance with the fuel sulfur content limit is demonstrated for eight consecutive weeks, the monitoring frequency shall be at least once every six months. If any six month monitoring period shows an exceedance, weekly monitoring shall resume. PEC is proposing to follow this same pre-approved fuel sulfur content monitoring scheme for these turbines. The following condition will ensure continued compliance with the requirements of this section:

- The sulfur content of each fuel source shall be: (i) documented in a valid purchase contract, a supplier certification, a tariff sheet or transportation contract or (ii) demonstrated within 60 days after the end of the commissioning period and monitored weekly thereafter. If the sulfur content is demonstrated to be less than 1.0 gr/100 scf for eight consecutive weeks, then the monitoring frequency shall be every six months. If the result of any six month monitoring demonstrates that the fuel does not meet the fuel sulfur content limit, weekly monitoring shall resume. [40 CFR 60.4360, 60.4365(a) and 60.4370(c)]

Section 60.4380 – Excess NO_X Emissions:

Section 60.4380 establishes reporting requirements for periods of excess emissions and monitor downtime. Paragraph (a) lists requirements for operators choosing to monitor parameters associated with water or steam to fuel ratios. As discussed above, HECA is not proposing to monitor parameters associated with water or steam to fuel ratios to predict what the NO_X emissions from the turbines will be. Therefore, the requirements of this paragraph are not applicable and no further discussion is required.

Paragraph (b) states that for turbines using CEMS:

(1) An excess emissions is any unit operating period in which the 4-hour or 30-day rolling average NO_X emission rate exceeds the applicable emission limit in §60.4320. For the purposes of this subpart, a "4-hour rolling average NO_X emission rate" is the arithmetic average of the average NO_X emission rate in ppm or ng/J (lb/MWh) measured by the continuous emission monitoring equipment for a given hour and the three unit operating hour average NO_X emission rates immediately preceding that unit operating hour. Calculate the rolling average if a valid NO_X emission rate is obtained for at least 3 of the 4 hours. For the purposes of this subpart, a "30-day rolling average NO_X emission rate" is the arithmetic average of all hourly NO_X emission data in ppm or ng/J (lb/MWh) measured by the continuous emission monitoring equipment for a given day and the twenty-nine unit operating days immediately preceding that unit operating day. A new 30-day average is calculated each unit operating day as the average of all hourly NO_X emissions rates for the preceding 30 unit operating days if a valid NO_X emission rate is obtained for at least 75 percent of all operating hours.

(2) A period of monitor downtime is any unit operating hour in which the data for any of the following parameters are either missing or invalid: NO_X concentration, CO2 or O_2 concentration, fuel flow rate, steam flow rate, steam temperature, steam pressure, or megawatts. The steam flow rate, steam temperature, and steam pressure are only required if you will use this information for compliance purposes.

(3) For operating periods during which multiple emissions standards apply, the applicable standard is the average of the applicable standards during each hour. For hours with multiple emissions standards, the applicable limit for that hour is determined based on the condition that corresponded to the highest emissions standard.

Paragraph (c) lists requirements for operators who choose to monitor combustion parameters that document proper operation of the NO_X emission controls. HECA is not proposing to monitor combustion parameters that document proper operation of the NO_X emission controls. Therefore, the requirements of this paragraph are not applicable and no further discussion is required.

The following condition will ensure continued compliance with the requirements of this section:

- Excess emissions shall be defined as any operating hour in which the 4-hour or 30-day rolling average NO_X concentration exceeds applicable emissions limit and a period of monitor downtime shall be any unit operating hour in which sufficient data are not obtained to validate the hour for either NO_X or O2 (or both). [40 CFR 60.4380(b)(1)]

<u>Section 60.4385 – Excess SO_X Emissions:</u>

Section 60.4385 states that if an operator chooses the option to monitor the sulfur content of the fuel, excess emissions and monitoring downtime are defined as follows:

(a) For samples of gaseous fuel and for oil samples obtained using daily sampling, flow proportional sampling, or sampling from the unit's storage tank, an excess emission occurs each unit operating hour included in the period beginning on the date and hour of any sample for which the sulfur content of the fuel being fired in the combustion turbine exceeds the applicable limit and ending on the date and hour that a subsequent sample is taken that demonstrates compliance with the sulfur limit.

(b) If the option to sample each delivery of fuel oil has been selected, you must immediately switch to one of the other oil sampling options (i.e., daily sampling, flow proportional sampling, or sampling from the unit's storage tank) if the sulfur content of a delivery exceeds 0.05 weight percent. You must continue to use one of the other sampling options until all of the oil from the delivery has been combusted, and you must evaluate excess emissions according to paragraph (a) of this section. When all of the fuel from the delivery has been burned, you may resume using the as-delivered sampling option.

(c) A period of monitor downtime begins when a required sample is not taken by its due date. A period of monitor downtime also begins on the date and hour of a required sample, if invalid results are obtained. The period of monitor downtime ends on the date and hour of the next valid sample.

The permittee will be following the definitions and procedures specified above for determining periods of excess SO_X emissions. Therefore, the proposed turbine will be operating in compliance with the requirements of this section.

Sections 60.4375, 60.4380, 60.4385 and 60.4395 – Reporting:

These sections establish the reporting requirements for the turbine. These requirements include methods and procedures for submitting reports of monitoring parameters, annual performance tests, excess emissions and periods of monitor downtime. The permittee is proposing to maintain records and submit reports in accordance with the requirements specified in these sections. Therefore, the proposed turbines will be operating in compliance with the requirements of this section. The following condition will ensure continued compliance with the requirements of this section:

- The owner or operator shall submit a written report of CEM operations for each calendar quarter to the APCO. The report is due on the 30th day following the end of the calendar quarter and shall include the following: Time intervals, data and magnitude of excess NO_X emissions, nature and the cause of excess (if known), corrective actions taken and preventative measures adopted; Averaging period used for data reporting corresponding to the averaging period specified in the emission test period and used to determine compliance with an emissions standard; Applicable time and date of each period during which the CEM was inoperative (monitor downtime), except for zero and span checks, and the nature of system repairs and adjustments; A negative declaration when no excess emissions occurred. [District Rule 1080 and 40 CFR 60.4375(a) and 60.4395]

Section 60.4400 – NO_X Performance Testing:

Section 60.4400, paragraph (a) states that an operator must conduct an initial performance test, as required in §60.8. Subsequent NO_X performance tests shall be conducted on an annual basis (no more than 14 calendar months following the previous performance test).

Paragraphs (1), (2) and (3) set forth the requirements for the methods that are to be used during source testing.

The permittee will be required to source test the exhaust of the turbine within 120 days of initial startup and at least once every 12 months thereafter. The permittee will be required to source test in accordance with the methods and procedures specified in paragraphs (1), (2), and (3). Therefore, the proposed turbines will be operating in compliance with the requirements of this section. The following conditions will ensure continued compliance with the requirements of this section:

- Source testing to measure the NOx, CO, VOC, and NH3 emission rates (lb/hr and ppmvd @ 15% O2) and PM10 emission rate (lb/hr) shall be conducted within 120 days after initial operation and at least once every twelve months thereafter. [District Rules 1081 and 4703 and 40 CFR 60.4400(a)]

- The following test methods shall be used: NOx - EPA Method 7E or 20, PM10 - EPA Method 5/202 (front half and back half), CO - EPA Method 10 or 10B, O2 - EPA Method 3, 3A, or 20, VOC - EPA Method 18 or 25, and ammonia – EPA Method 206. EPA approved alternative test methods as approved by the District may also be used to address the source testing requirements of this permit. The request to utilize EPA

approved alternative source testing methods must be submitted in writing and written approval received from the District prior to the submission of the source test plan. [District Rules 1081 and 4703 and 40 CFR 60.4400(1)(i)]

Section 60.4405 – Initial CEMS Relative Accuracy Testing:

Section 60.4405 states that if you elect to install and certify a NO_X-diluent CEMS, then the initial performance test required under §60.8 may be performed in the alternative manner described in paragraphs (a), (b), (c) and (d). The permittee has not indicated that they would like to perform the initial performance test of the CEMS using the alternative methods described in this section. Therefore, the requirements of this section are not applicable and no further discussion is required.

Section 60.4410 – Parameter Monitoring Ranges:

Section 60.4410 sets fourth requirements for operators that elect to monitor combustion parameters or parameters indicative of proper operation of NO_X emission controls. As discussed above, the permittee is proposing to install a CEMS system to monitor the NO_X emissions from the turbine and is not proposing to monitor combustion parameters or parameters indicative of proper operation. Therefore, the requirements of this section are not applicable and no further discussion is required.

Section 60.4415– SO_X Performance Testing:

Section 60.4415 states that an operator must conduct an initial performance test, as required in §60.8. Subsequent SO_2 performance tests shall be conducted on an annual basis (no more than 14 calendar months following the previous performance test). There are three methodologies that may be used to conduct the performance tests.

(1) If the applicant chooses to periodically determine the sulfur content of the fuel combusted in the turbine, a representative fuel sample would be collected following ASTM D5287 (incorporated by reference, see §60.17) for natural gas or ASTM D4177 (incorporated by reference, see §60.17) for oil. Alternatively, for oil, the applicant may follow the procedures for manual pipeline sampling in section 14 of ASTM D4057 (incorporated by reference, see §60.17). The fuel analyses of this section may be performed either by the perrnittee, a service contractor retained by the permittee, the fuel vendor, or any other qualified agency. The samples should be analyzed for the total sulfur content of the fuel using:

(i) For liquid fuels, ASTM D129, or alternatively D1266, D1552, D2622, D4294, or D5453 (all of which are incorporated by reference, see §60.17); or

(ii) For gaseous fuels, ASTM D1072, or alternatively D3246, D4084, D4468, D4810, D6228, D6667, or Gas Processors Association Standard 2377 (all of which are incorporated by reference, see §60.17).

The permittee shall periodically determine the sulfur content of the fuel combusted in each of these turbines when valid purchase contracts, tariff sheets or transportation contract are not

available. The sulfur content will be determined using the methods specified above. Therefore, the proposed turbines will be operating in compliance with the requirements of this section. The following condition will ensure continued compliance with the requirements of this section:

- Fuel sulfur content shall be monitored using one of the following methods: ASTM Methods D1072, D3246, D4084, D4468, D4810, D6228, D6667 or Gas Processors Association Standard 2377. [40 CFR 60.4415(a)(1)(i)]

Methodologies (2) and (3) are applicable to operators that elect to measure the SO_2 concentration in the exhaust stream. HECA is not proposing to measure the SO_2 in the exhaust stream of the turbine. Therefore, the requirements of these methodologies are not applicable and no further discussion is required.

Conclusion:

Conditions will be incorporated into the permit in order to ensure compliance with each applicable section of this subpart. Therefore, compliance with the requirements of Subpart KKKK is expected and no further discussion is required.

40 CFR 60 – Subpart Db
S-7616-13-0 (Natural Gas-Fired Auxiliary Boiler):

New Source Performance Standards, Code of Federal Regulations 40 part 60, Subpart Db (Standards of Performance for Small Industrial-Commercial-Institutional Steam Generating Units) applies only to units with heat input capacity of greater than 100 MMBtu/hr. The new 142 MMBtu/hr natural gas-fired auxiliary boiler in this project is subject to the New Source Performance Standards, Code of Federal Regulations 40 part 60, Subpart Db (Standards of Performance for Small Industrial-Commercial-Institutional Steam Generating Units).

PM and SOx Standards:

Sections 60.42b and 60.43b list requirements for Particulate Matter (PM) and SO_X emissions. The PM and SO_X requirements are applicable for facilities that operate coal or oil fired steam generators. The applicant is only proposing to operate the new boiler on PUC-quality natural gas. Therefore, the PM and SOx standards of this subpart do not apply.

NOx Standards and Testing:

Section 60.44b (a) states that the owner or operator of an affected facility that is subject to the provisions of this section and that combusts only coal, oil or natural gas shall cause to be discharged into the atmosphere from the affected facility any gases that contain nitrogen oxides (expressed as NO_2) in excess of the specified limits.

Section 60.44b (a) states that, for low heat and high release rate units, the natural gas-fired emission limit is 0.10 lb-NOx/MMBtu and 0.20 lb-NOx/MMBtu, respectively. The permittee has proposed a boiler that will be limited to 0.0060 lb-NOx/MMBtu (5 ppmvd-NOx @ 3% O2). Section 60.44b (h) states the emission limit in Section 60.44b (a) shall apply at all times, including periods of startup, shutdown, or malfunction. Section 60.44b (i) states that, except provided under

paragraph 60.44b (j), compliance with the emission limits in Section 60.44b (a) is determined on a 30-day rolling average.

Section 60.46b (c) states that compliance with the NOx limits in Section 60.44b shall be determined through performance testing under paragraph (e) or (f), or under paragraphs (g) and (h) of section 60.46b, as applicable.

Section 60.46b (e) states that, to determine compliance with the emission limits for NOx required under Section 60.44b, the owner or operator of an affected facility shall conduct the performance test as required under Section 60.8 using the continuous emission monitoring system for monitoring NOx under 60.48b.

NOx Monitoring

Section 60.48b (b) states that, except as provided under paragraphs (g), (h), and (i) of section 60.48b, the owner or operator of an affected facility subject to the NOx standard under Section 60.44b shall comply with either paragraphs (b)(1) or (b)(2) of Section 60.48b.

(b)(1) Install, calibrate, maintain, and operate a continuous monitoring system (CEMs), and record the output of the system, of measuring NOx emissions discharged to the atmosphere

Section 60.48b (g) states that the owner or operator of an affected facility that has a heat input capacity of 73 MW (250 MMBtu/hr) or less, and which has an annual capacity factor for residual oil having a nitrogen content of 0.30 weight percent or less, natural gas, distillate oil, or any mixture of these fuels, greater than 10 percent shall:

(1) Comply with the provisions of paragraphs (b), (c), (d), (e)(2), and (f) of Section 60.48b, or
(2) Monitor steam generating unit operating conditions and predict NOx emission rates as specified in a plan submitted pursuant to Section 60.49b (c).

Section 60.48b (j) states that units that burn only oil that contains no more than 0.3 weight percent sulfur or liquid or gaseous fuels with potential sulfur dioxide emission rates of 140 ng/J (0.32 lb/MMBtu) heat input or less are not required to conduct PM emissions monitoring if they maintain fuel supplier certifications of the sulfur content of the fuels burned.

Recordkeeping and Reporting

Section 60.49b (a)(1) states that the owner or operator of an affected facility shall submit notification of the date of initial startup, as provided by Section 60.7 and shall include the design heat input capacity and identification of the fuels to be combusted. The following condition will be added to the permit to assure compliance with this section:

- Permittee shall comply with all applicable NSPS requirements, including monitoring, notification and reporting requirements as described in 40 CFR 60 Subparts A and Db. [District Rule 4001]

Section 60.49b (c) states that the owner or operator of each affected facility subject to the NOx standard of 60.44b who seeks to demonstrate compliance with those standards through the

monitoring of steam generator unit operating conditions under the provisions of 60.48b (g)(2) shall submit to the Administrator for approval a plan that identifies the operating conditions to be monitored under 60.48b (g)(2) and the records to be maintained under 60.49b (j). This plan shall be submitted to the Administrator for approval within 360 days of the initial startup of the affected facility. The plan shall:

(1) Identify the specific operating conditions to be monitored and the relationship between these operating conditions and NOx emission rates (lb/MMBtu heat input). Steam generating unit operating conditions include, but are not limited to, the degree of staged combustion (i.e. ratio of primary air to secondary and/or tertiary air) and the level of excess air (i.e. flue gas oxygen level);
(2) Include the data and information that the owner or operator used to identify the relationship between NOx emission rates and these operating conditions;
(3) Identify how these operating condition, including steam generating unit load, will be monitored under 60.48b(g) on an hourly basis by the owner or operator during the period of operation of the affected facility; the quality assurance procedure or practices that will be employed to ensure that the data generated by monitoring these operating conditions will be representative and accurate; and the type and format of the records of these operating conditions, including steam generating unit load, that will be maintained by the owner or operator under 60.49b(j).

If the plan is approved, the owner or operator shall maintain records of predicted NOx emission rates and the monitored operating conditions, including steam generating unit load, identified in the plan. The following condition will be added to the permit:

- Permittee shall submit to the EPA Regional Administrator for approval a plan that identifies the operating conditions to be monitored under 40 CFR 60.48b (g)(2) and the records to be maintained under 60.49b (j). This plan shall be submitted to the EPA Regional Administrator for approval within 360 days of the initial startup of the affected facility. [District Rule 4001]

Conclusion:

The new boiler complies with Subpart Db requirements. The following condition will remain on the permit to ensure continued compliance:

- Permittee shall comply with all applicable NSPS requirements, including monitoring, notification and reporting requirements as described in 40 CFR 60 Subparts A and Db. [District Rule 4001]

- Permittee shall submit to the EPA Regional Administrator for approval a plan that identifies the operating conditions to be monitored under 40 CFR 60.48b (g)(2) and the records to be maintained under 60.49b (j). This plan shall be submitted to the EPA Regional Administrator for approval within 360 days of the initial startup of the affected facility

Therefore, compliance with the requirements of this rule is expected.

40 CFR 60 – Subpart Y (Standards of Performance for Coal Preparation and Processing Plants)
S-7616-1-0 (Feedstock Handling and Storage System):

New Source Performance Standards, Code of Federal Regulations 40 part 60, Subpart Y (Standards of Performance for Coal Preparation and Processing Plants) applies to affected facilities in coal preparation and processing plants that process more than 181 megagrams (Mg) (200 tons) of coal per day. The HECA facility will be authorized to amounts greater than this value per the following conditions on S-7616-1:

- The maximum process rates of material on a weight basis shall not exceed any of the following: truck unloading: 18,600 ton/day; coke/coal silos filling: 18,600 ton/day; mass flow bins: 4,080 ton/day; coke/coal silos loadout: 4,080 ton/day; crusher inlet/outlet: 4,080 ton/day; fluxant bins filling: 960 ton/day. [District Rule 2201]

- The maximum process rates of material on a weight basis shall not exceed any of the following: truck unloading: 1,314,000 ton/yr; coke/coal silos filling: 1,314,000 ton/yr; mass flow bins: 1,314,000 ton/yr; coke/coals silo loadout: 1,314,000 ton/yr; crusher inlet/outlet: 1,314,000 ton/yr; fluxant bins filling: 52,560 ton/yr. [District Rule 2201]

60.250 Applicability and designation of affected facility:

(d) The provisions in §60.251 - Definitions, §60.252(b)(1) through (3), and (c) – Standards for thermal dryers; §60.253(b) – Standards for pneumatic coal-cleaning equipment; §60.254(b) and (c) – Standard for coal processing and conveying equipment, coal storage systems, transfer and loading systems, and open storage piles; §60.255(b) through (h) – Performance tests and other compliance requirements; §60.256(b) and (c) – Continuous monitoring requirements; §60.257 – Test methods and procedures; and §60.258 – Reporting and recordkeeping of this subpart are applicable to any of the following affected facilities that commenced construction, reconstruction or modification after May 27, 2009: thermal dryers, pneumatic coal-cleaning equipment (air tables), coal processing and conveying equipment (including breakers and crushers), coal storage systems, transfer and loading systems, and open storage piles. This operation will commence construction after this applicable date, and it will consists of coal processing and conveying equipment and coal storage systems,

60.254 Standards for coal processing and conveying equipment, coal storage systems, transfer and loading systems, and open storage piles:

Section 60.254 (b) states that on and after the date on which the performance test is conducted or required to be completed under §60.8, whichever date comes first, an owner or operator of any coal processing and conveying equipment, coal storage system, or coal transfer and loading system processing coal constructed, reconstructed, or modified after April 28, 2008, must meet the requirements in paragraphs (b)(1) through (3) of this section, as applicable to the affected facility.

Section 60.254 (b)(1) states that except as provided in paragraph (b)(3) of this section, the owner or operator must not cause to be discharged into the atmosphere from the affected facility any gases which exhibit 10 percent opacity or greater. The proposed operation has conditions

prohibiting visible emissions (5 percent opacity), so this requirement is satisfied. The following conditions will ensure compliance with this section:

- All storage silos shall be dust-tight (no visible emissions in excess of 0% opacity) and shall vent only to dust collectors. [District Rules 2201, 4001, and 40 CFR 60.254]

- Each dust collector shall be equipped with dust-tight (no visible emissions in excess of 0% opacity) provisions to return collected material to process equipment. [District Rules 2201, 4001, and 40 CFR 60.254]

Section 60.254 (b)(2) states that the owner or operator must not cause to be discharged into the atmosphere from any mechanical vent on an affected facility gases which contain particulate matter in excess of 0.023 g/dscm (0.010 gr/dscf). The exhaust PM10 emission concentration rate will not exceed 0.005 gr/dscf from any of the dust collectors, so this requirement is satisfied. The following condition will ensure compliance with this section.

- Particulate matter emissions shall not exceed 0.005 grains/dscf in concentration from this operation. [District Rules 2201, 4001, and 40 CFR 60.254]

Section 60.254 (b)(3) states that equipment used in the loading, unloading, and conveying operations of open storage piles are not subject to the opacity limitations of paragraph (b)(1) of this section. The proposed operation does not consist of open storage piles, so this section does not apply.

Section 60.254 (c) states that the owner or operator of an open storage pile, which includes the equipment used in the loading, unloading, and conveying operations of the affected facility, constructed, reconstructed, or modified after May 27, 2009, must prepare and operate in accordance with a submitted fugitive coal dust emissions control plan that is appropriate for the site conditions as specified in paragraphs (c)(1) through (6) of this section. The proposed operation does not consist of open storage piles, so this section does not apply.

<u>60.255 Performance tests and other compliance requirements</u>:

Section 60.255 (b)(1) states that an owner or operator of each affected facility that commenced construction, reconstruction, or modification after April 28, 2008, must conduct performance tests according to the requirements of §60.8 and the methods identified in §60.257 to demonstrate compliance with the applicable emissions standards in this subpart as specified in paragraphs (b)(1) and (2) of this section.

Section 60.255 (b)(1) states that for each affected facility subject to a PM, SO_2, or combined NO_X and CO emissions standard, an initial performance test must be performed. Thereafter, a new performance test must be conducted according the requirements in paragraphs (b)(1)(i) through (iii) of this section, as applicable.

(i) If the results of the most recent performance test demonstrate that emissions from the affected facility are greater than 50 percent of the applicable emissions standard, a new performance test must be conducted within 12 calendar months of the date that the previous performance test was required to be completed.

(ii) If the results of the most recent performance test demonstrate that emissions from the affected facility are 50 percent or less of the applicable emissions standard, a new performance test must be conducted within 24 calendar months of the date that the previous performance test was required to be completed.

Therefore, the following conditions will be included:

- Testing for particulate matter concentration for each dust collector shall be conducted within 60 days after achieving the maximum production rate, not later than 180 days after initial startup of such facility, and within 12 calendar months of the date the previous performance test was required to be completed thereafter. If the results of the most recent performance test demonstrate that emissions from the affected facility are 50 percent or less of the applicable emissions standard, a new performance test must be conducted within 24 calendar months of the date that the previous performance test was required to be completed. [District Rule 4001 and 40 CFR 60.255(1), 40 CFR 60.8]

- Testing for compliance with particulate matter concentration limit shall be conducted using EPA method 5. The sampling time and sample volume for each run shall be at least 60 minutes and 0.85 dscm (30 dscf). Sampling shall begin no less than 30 minutes after startup and shall terminate before shutdown procedures begin. A minimum of three valid test runs are needed to comprise a PM performance test. [District Rule 4001 and 40 CFR 60.255(1) and 60.257(5)(i)]

Section 60.255 (b)(2) states that for each affected facility subject to an opacity standard, an initial performance test must be performed. Thereafter, a new performance test must be conducted according to the requirements in paragraphs (b)(2)(i) through (iii) of this section, as applicable, except as provided for in paragraphs (e) and (f) of this section. Performance test and other compliance requirements for coal truck dump operations are specified in paragraph (h) of this section.

(i) If any 6-minute average opacity reading in the most recent performance test exceeds half the applicable opacity limit, a new performance test must be conducted within 90 operating days of the date that the previous performance test was required to be completed.

(ii) If all 6-minute average opacity readings in the most recent performance test are equal to or less than half the applicable opacity limit, a new performance test must be conducted within 12 calendar months of the date that the previous performance test was required to be completed.

(iii) An owner or operator of an affected facility continuously monitoring scrubber parameters as specified in §60.256(b)(2) is exempt from the requirements in paragraphs (b)(2)(i) and (ii) if opacity performance tests are conducted concurrently with (or within a 60-minute period of) PM performance tests.

Therefore, the following conditions will be included:

- Testing for the opacity standards for the operations shall be conducted within 60 days after achieving the maximum production rate, not later than 180 days after initial startup of such facility, and within 90 operating days of the date the previous performance test was required to be completed thereafter. If all 6-minute average opacity readings in the most recent performance test are equal to or less than half the applicable opacity limit, a new performance test must be conducted within 12 calendar months of the date that the previous performance test was required to be completed. [District Rule 4001 and 40 CFR 60.255(2), 40 CFR 60.8]

- Source testing to determine opacity as required by 40 CFR Part 60, Subpart Y shall be conducted using EPA method 9. [District Rule 4001 and 40 CFR 60.257(a)]

- The permittee shall conduct monthly visual observations of all process and control equipment. If any deficiencies are observed, the necessary maintenance must be performed as expeditiously as possible. [District Rule 4001 and 40 CFR 60.257]

Section 60.256 does not apply as it only affects to those operations with continuous monitoring requirements.

Section 60.257 (Test methods and procedures) contains the test methods and procedures required for determine compliance with the opacity and PM concentration limits. Those requirements are specified in the discussions above.

<u>60.258 Reporting and recordkeeping</u>:

Section 60.258 (a) states that the owner or operator of a coal preparation and processing plant that commenced construction, reconstruction, or modification after April 28, 2008, shall maintain in a logbook (written or electronic) on-site and make it available upon request. The logbook requires the permittee to maintain records as specified in Section 60.258. The following condition will be included:

- Permittee shall maintain a logbook (written or electronic) with the records specified in 40 CFR Subpart 60.258(a) on-site and make it available upon request. [District Rule 4001 and 40 CFR 60.258]

Section 60.258 (b) lists notification and recordkeeping requirements for those units subject to section 60.7(c). Section 60.7 (c) applies to those units served by continuous emission monitoring systems, and since this operation is not equipped with them, this section does not apply.

Section 60.258 (c) indicates that affected facilities subject to performance test requirements of section 60.8 shall submit the initial performance test results consistent with the provisions of section 60.8, which requires subrnittal of test results within 60 days after achieving the maximum production rate at which the affected facility will be operated, but not later than 180 days after initial startup of such facility, or at such other times specified by this part, and at such other times as may be required by the Administrator under section 114 of the Act, the owner or operator of such facility shall conduct performance test(s) and furnish the Administrator a written report of the results of such performance test(s).

- Permittee shall conduct testing for compliance with the particulate matter concentration limit and particulate matter concentration limit within 60 days after achieving the maximum production rate, not later than 180 days after initial startup of such facility. [District Rule 4001 and 40 CFR 60.258(c), 40 CFR 60.8]

- Permittee shall provide the District at least 30 days prior notice of any performance test, except as specified under other subparts, to afford the Administrator the opportunity to have an observer present.. [District Rule 4001 and 40 CFR 60.8]

Conclusion:

Conditions will be incorporated into the permit in order to ensure compliance with each applicable section of this subpart. Therefore, compliance with the requirements of Subpart Y is expected and no further discussion is required.

Rule 4002 - National Emission Standards for Hazardous Air Pollutants (NESHAPs)

Pursuant to Section 2.0, "All sources of hazardous air pollution shall comply with the standards, criteria, and requirements set forth therein;" therefore, the requirements of this rule applies to HECA. But there are no applicable requirements for a non-major HAPs source. HECA will conduct an initial speciated HAPS compliance source test to demonstrate that the facility is not a major HAPS source.

Proposed Rule 4002 Condition:

- Hazardous Air Pollutant (HAP) emissions shall not exceed 25 tpy all HAPS or 10 tpy any single HAP. [District Rule 4002]

- Permittee shall conduct an initial speciated HAPS and total VOC source test for the combustion turbine generator, by District witnessed in situ sampling of exhaust gases by a qualified independent source test firm. The permittee shall correlate the total HAPs emissions rate and the single highest HAP emission rate to the VOC mass emission determined during the speciated HAPs source test. Initial and annual compliance with the HAPs emissions limit (25 tpy all HAPs or 10 tpy any single HAP) shall be demonstrated by the combined VOC emissions rates for the combustion gas turbine determined during initial and annual compliance source testing and the correlation between VOC emissions and HAP(s). [District Rule 4002]

Rule 4101 - Visible Emissions

Per Section 5.0, no person shall discharge into the atmosphere emissions of any air contaminant aggregating more than 3 minutes in any hour which is as dark as or darker than Ringelmann 1 (or 20% opacity).

Combined Cycle Combustion Turbine Generator (S-7616-9-0):

The turbine lube oil vent will be limited by permit condition to not have visible emissions, except for three minutes in any hour, greater than 5% opacity as a BACT requirement and the exhaust stack emissions will be limited by permit condition to no greater than 20% opacity except for three minutes in any hour. Therefore compliance is expected.

Proposed Rule 4101 Conditions:

- No air contaminant shall be discharged into the atmosphere for a period or periods aggregating more than three minutes in any one hour which is as dark as, or darker than, Ringelmann 1 or 20% opacity. [District Rule 4101]
- Combustion turbine generator (CTG) and electrical generator lube oil vents shall be equipped with mist eliminators. Visible emissions from lube oil vents shall not exhibit opacity of 5% or greater, except for up to three minutes in any hour. [District Rules 2201 and 4101]

Cooling Towers (S-7616-4-0, 11-0, -12-0):
Diesel-Fired Emergency Engines (S-7616-14, -15, -16):

The cooling towers and IC engines are not expected to have visible emissions, excluding uncombined water vapor for the cooling towers, greater than 20% opacity. Therefore, compliance is expected.

Proposed Rule 4101 Condition:

- No air contaminant shall be discharged into the atmosphere for a period or periods aggregating more than three minutes in any one hour which is as dark as, or darker than, Ringelmann 1 or 20% opacity. [District Rule 4101]

S-7616-13-0 (Natural Gas Fired Auxiliary Boiler):

The natural gas fired boiler is not expected to have visible emissions greater than 20% opacity. Therefore, compliance is expected.

Proposed Rule 4101 Condition:

- No air contaminant shall be discharged into the atmosphere for a period or periods aggregating more than three minutes in any one hour which is as dark as, or darker than, Ringelmann 1 or 20% opacity. [District Rule 4101]

Therefore, compliance with District Rule 4101 requirements is expected.

Rule 4102 - Nuisance

Section 4.0 prohibits discharge of air contaminants which could cause injury, detriment, nuisance or annoyance to the public. Public nuisance conditions are not expected as a result of these operations, provided the equipment is well maintained. Therefore, compliance with this rule is expected.

California Health & Safety Code 41700 (Health Risk Assessment)

District Policy APR 1905 – Risk Management Policy for Permitting New and Modified Sources specifies that for an increase in emissions associated with a proposed new source or modification, the District perform an analysis to determine the possible impact to the nearest resident or worksite.

An HRA is not required for a project with a total facility prioritization score of less than one. According to the Technical Services Memo for this project (Appendix H), the total facility prioritization score including this project was greater than one. Therefore, a health risk assessment was required to determine the short-term acute and long-term chronic exposure from this project.

The cancer risk for this project is shown below:

HRA Summary		
Unit	Cancer Risk	T-BACT Required
S-7616-1-0 through -8-0 and -10-0 through -16-0	1.27 per million	No
S-7616-9-0	2.08 per million	Yes

Discussion of T-BACT

BACT for toxic emission control (T-BACT) is required if the cancer risk exceeds one in one million. As demonstrated above, T-BACT is required for the combustion turbine generator (S-7616-9) because the HRA indicates that the risk is above the District's thresholds for triggering T-BACT requirements. For each of the remaining units in the project have T-BACT is not triggered since the cancer risk from the individual units does not exceed one in one million.

Per policy APR 1905, one of the ways T-BACT can be satisfied is by a control technique for hazardous air pollutant that has been achieved in practice for such emissions unit and class of source. As is shown in the BACT discussion of this document, S-7616-9 has been demonstrated that is at least as effective as the achieve a control technique that has been achieved in practice for the emissions unit and class. Therefore, compliance with the District's Risk Management Policy is expected.

The following permit conditions will be included:

S-7616-1-0 through -13-0

No special conditions are required.

S-7616-14-0 and -5-0

- Modified {1901} The PM10 emissions rate shall not exceed **0.07** g/hp-hr based on US EPA certification using ISO 8178 test procedure. [District Rule 2201]

- {1902} The sulfur content of the diesel fuel used shall not exceed 0.05% by weight. [District Rule 2201]

- {1898} The exhaust stack shall vent vertically upward. The vertical exhaust flow shall not be impeded by a rain cap, roof overhang, or any other obstruction. [District Rule 4102]

- {1344} The engine shall be operated only for maintenance, testing, and required regulatory purposes, and during emergency situations. Operation of the engine for maintenance, testing, and required regulatory purposes shall not exceed **100** hours per year. [District NSR Rule and District Rule 4701]

S-7616-16-0

- Modified {1901} The PM10 emissions rate shall not exceed **0.01** g/hp-hr based on US EPA certification using ISO 8178 test procedure. [District Rule 2201]

- {1902} The sulfur content of the diesel fuel used shall not exceed 0.05% by weight. [District Rule 2201]

- {1898} The exhaust stack shall vent vertically upward. The vertical exhaust flow shall not be impeded by a rain cap, roof overhang, or any other obstruction. [District Rule 4102]

- {1344} The engine shall be operated only for maintenance, testing, and required regulatory purposes, and during emergency situations. Operation of the engine for maintenance, testing, and required regulatory purposes shall not exceed **100** hours per year. [District NSR Rule and District Rule 4701]

Rule 4201 - Particulate Matter Concentration

Section 3.1 prohibits discharge of dust, fumes, or total particulate matter into the atmosphere from any single source operation in excess of 0.1 grain per dry standard cubic foot.

S-7616-9-0 (Combustion Turbine Generator):

$$\text{PM Conc. (gr/scf)} = \frac{\text{(PM emission rate) x (7,000 gr/lb)}}{\text{(Exhaust gas flow rate) x (60 min/hr) x (24 hr/day)}}$$

PM_{10} emission rate: 483.0 lb/day (assuming 100% of PM is PM10)
Exhaust gas flow: 714,000 scfm

PM Conc. (gr/scf) = [(483.0 lb/day)(7,000 gr/lb)] ÷ [(714,000 ft^3/min)(60 min/hr)(24 hr/day)]
PM Conc. = 0.0033 gr/scf

S-7616-13-0 (Natural Gas Fired Auxiliary Boiler):

F-Factor for natural gas: 8,578 dscf/MMBtu at 60 °F
PM10 emission factor: 0.0050 lb-PM10/MMBtu
Percentage of PM as PM10 in exhaust: 100%
Exhaust O_2 Concentration: 3%

$$\text{Excess Air Correction to F Factor} = \frac{20.9}{(20.9 - 3)} = 1.17$$

$$GL = \left(\frac{0.0050\ lb-PM}{MMBtu} \times \frac{7{,}000\ grain}{lb-PM}\right) / \left(\frac{8{,}578\ ft^3}{MMBtu} \times 1.17\right)$$

$$GL = 0.0035\ grain/dscf < 0.1\ grain/dscf$$

S-7616-14-0 and -15-0 (Emergency Engines Powering Electrical Generators):

$$0.07\ \frac{g-PM_{10}}{bhp-hr} \times \frac{1\,g-PM}{0.96\,g-PM_{10}} \times \frac{1\,bhp-hr}{2{,}542.5\,Btu} \times \frac{10^6\,Btu}{9{,}051\,dscf} \times \frac{0.35\,Btu_{out}}{1\,Btu_{in}} \times \frac{15.43\,grain}{g} = 0.017\ \frac{grain-PM}{dscf}$$

S-7616-16-0 (Emergency Engine Powering Firewater Pump):

$$0.01\ \frac{g-PM_{10}}{bhp-hr} \times \frac{1\,g-PM}{0.96\,g-PM_{10}} \times \frac{1\,bhp-hr}{2{,}542.5\,Btu} \times \frac{10^6\,Btu}{9{,}051\,dscf} \times \frac{0.35\,Btu_{out}}{1\,Btu_{in}} \times \frac{15.43\,grain}{g} = 0.002\ \frac{grain-PM}{dscf}$$

Calculated emissions are well below the allowable emissions level. Therefore, compliance with Rule 4201 is expected. The following conditions will be added to these permits:

- {14} Particulate matter emissions shall not exceed 0.1 grains/dscf in concentration. [District Rule 4201]

Rule 4202 - Particulate Matter Emission Rate

Rule 4202 establishes PM emission limits as a function of process weight rate in tons/hr. Gas and liquid fuels are excluded from the definition of process weight. Therefore, Rule 4202 does not apply to the turbine or the engine. However, it does apply to the cooling towers.

Assuming all cooling tower PM emissions are PM_{10}, Rule 4202 emission limits are calculated as follows:

Cooling Tower S-7616-4-0:

Weight rate/cooling tower = (42,300 gal/min)(60 min/hr)(8.34 lb/gal) ÷ 2,000 lb/ton
= 10,583 ton/hr

Rule 4202 emission limit = $17.31 * P^{0.16}$ (where P greater than 30 tons/hr)
= $17.31 * (10{,}583)^{0.16}$
= 76.26 lb/hr < Calculated PM rate

Calculated PM rate = 1.0 lb/hr (22.9 lb/day @ 24 hr/day)

Cooling Tower S-7616-11-0:

Weight rate/cooling tower = (40,200 gal/min)(60 min/hr)(8.34 lb/gal) ÷ 2,000 lb/ton
= 10,058 ton/hr

Rule 4202 emission limit = $17.31 * P^{0.16}$ (where P greater than 30 tons/hr)
= $17.31 * (10{,}058)^{0.16}$
= 75.6 lb/hr < Calculated PM rate

Calculated PM rate = 0.9 lb/hr (21.7 lb/day @ 24 hr/day)

Cooling Tower S-7616-12-0:

Weight rate/cooling tower = (175,000 gal/min)(60 min/hr)(8.34 lb/gal) ÷ 2,000 lb/ton
= 43,785 ton/hr

Rule 4202 emission limit = $17.31 * P^{0.16}$ (where P greater than 30 tons/hr)
= $17.31 * (43{,}785)^{0.16}$
= 95.7 lb/hr < Calculated PM rate

Calculated PM rate = 3.9 lb/hr (94.6 lb/day @ 24 hr/day)

As is shown above, all cooling tower will comply with the Rule 4202 emission limits. Compliance is expected.

Rule 4301 - Fuel Burning Equipment

Rule 4301 limits air contaminant emissions from fuel burning equipment as defined in the rule. Section 3.1 defines fuel burning equipment as "any furnace, boiler, apparatus, stack, and all appurtenances thereto, used in the process of burning fuel for the primary purpose of producing heat or power by indirect heat transfer".

S-7616-9-0 (Combustion Turbine Generator)

The CTG primarily produces power mechanically, i.e. the products of combustion pass across the power turbine blades which causes the turbine shaft to rotate. The turbine shaft is coupled to an electrical generator shaft which is rotated to produce electricity. Because CTG primarily produce power by mechanical means, it does not meet the definition of fuel burning equipment. Rule 4301 does not apply to the affected equipment.

S-7616-14-0 and -15-0 (Emergency Engines Powering Electrical Generators)
S-7616-16-0 (Emergency Engine Powering Firewater Pump)

The emergency use IC engines produces power mechanically. Therefore, they do not meet the definition of fuel burning equipment. Rule 4301 does not apply to the affected equipment.

S-7616-13-0 (Auxiliary Boiler)

This rule specifies maximum emission rates in lb/hr for SO_2, NO_2, and combustion contaminants (defined as total PM in Rule 1020). This rule also limits combustion contaminants to ≤ 0.1 gr/scf. According to AP 42 (Table 1.4-2, footnote c), all PM emissions from natural gas combustion are less than 1 μm in diameter.

District Rule 4301 Limits			
Pollutant	**NO_2**	**Total PM**	**SO_2**
ATC #S-7616-13-0 (lb/day)	20.4	17.0	9.7
ATC #S-7616-13-0 (lb/hr)	0.9	1.1	0.4
Rule Limit (lb/hr)	140	10	200

The above table indicates compliance with the maximum lb/hr emissions in this rule; therefore, compliance is expected.

Rule 4305 - Boilers, Steam Generators and Process Heaters – Phase 2

The auxilary boiler (S-7616-13-0) is natural gas-fired with a maximum heat input of 142 MMBtu/hr. Pursuant to Section 2.0 of District Rule 4305, the unit is subject to District Rule 4305, *Boilers, Steam Generators and Process Heaters – Phase 2.*

In addition, the unit is also subject to District Rule 4306, *Boilers, Steam Generators and Process Heaters – Phase 3.*

Since emissions limits of District Rule 4306 and all other requirements are equivalent or more stringent than District Rule 4305 requirements, compliance with District Rule 4306 requirements will satisfy requirements of District Rule 4305. Therefore, compliance with District Rule 4305 requirements is expected and no further discussion is required.

Rule 4306 - Boilers, Steam Generators and Process Heaters – Phase 3

This rule limits NOx and CO emissions from boilers, steam generators, and process heaters rated greater than 5 MMBtu/hr. The subject natural gas fired auxiliary boiler (S-7616-13-0) is will comply with the applicable provisions of this rule. Source testing, monitoring and recordkeeping requirements of Rule 4320 are equal to or more stringent than the requirements of this rule; therefore, compliance is expected

Rule 4320 - Advanced Emission Reduction Options for Boilers, Steam Generators, and Process Heaters Greater Than 5.0 MMBtu/hr

This rule limits NOx, CO, SO2 and PM10 emissions from boilers, steam generators and process heaters rated greater than 5 MMBtu/hr. This rule also provides a compliance option of payment of fees in proportion to the actual amount of NOx emitted over the previous year.

S-7616-13-0 (Auxiliary Boiler):

The unit in this project is rated at 142 MMBtu/hr heat input. The facility plans to equip the boiler with an ultra-low NOx burner and flue gas recirculation to meet a NOx emission limit of 5 ppmv @ 3% O2.

Section 5.1 NOx Emission Limits

Section 5.1 states that an operator of a unit(s) subject to this rule shall comply with all applicable requirements of the rule and one of the following, on a unit-by-unit basis:

5.1.1 Operate the unit to comply with the emission limits specified in Sections 5.2 and 5.4; or
5.1.2 Pay an annual emissions fee to the District as specified in Section 5.3 and comply with the control requirements specified in Section 5.4; or
5.1.3 Comply with the applicable Low-use Unit requirements of Section 5.5.

Section 5.2.1 states that on and after the indicated Compliance Deadline, a unit shall not be operated in a manner which exceeds the applicable NOx limit specified in Table 1 of this rule.

With a maximum heat input of 142 MMBtu/hr for the boiler, the applicable emission limit category Section 5.2, Table 1, Category B, from District Rule 4320 is as follows:

Rule 4320 NOx Emission Limits			
Category	**NOx Limit**	**Authority to Construct**	**Compliance Deadline**
B. Units with a total rated heat input > 20.0 MMBtu/hr, except for Categories C through G units	a) Standard Schedule 7 ppmv or 0.008 lb/MMBtu; or	July 1, 2009	July 1, 2010
	b) Enhanced Schedule 5 ppmv or 0.0062 lb/MMBtu	January 1, 2013	January 1, 2014

The following condition will be included in the ATC to reflect compliance with Rule 4320 NOx requirements:

- Emissions from this unit, except during startup, shutdown, or refractory curing shall not exceed any of the following limits: NOx (as NO2): 5 ppmvd @ 3% O_2 or 0.006 lb/MMBtu, SOx (as SO_2): 0.00285 lb/MMBtu, PM_{10}: 0.0076 lb/MMBtu, CO: 50.8 ppmvd @ 3% O_2 or 0.037 lb/MMBtu, or VOC: 0.0040 lb/MMBtu. [District Rules 2201, 4305, 4306 and 4320]

Section 5.6 Startup and Shutdown Provisions

Section 5.6 states that on and after the full compliance deadline specified in Section 5.0, the applicable emission limits of Sections 5.2 Table 1 and 5.5.2 shall not apply during start-up or shutdown provided an operator complies with the requirements specified in Sections 5.6.1 through 5.6.5.

Section 5.6 specifies start-up and shutdown provisions. Section 5.6.1 states that the duration of each start-up or each shutdown shall not exceed two hours, except as provided in Section 5.6.3, whereby the applicant applies and received approval for more than two hours for each start-up or each shutdown.
The applicant has not proposed start-up and shutdown duration limits greater than those specified in section 5.6.1. Emissions during start-up and shutdown will not be subject to the emission limits in Sections 5.2 and 5.2.2. The following condition will be added to the ATC:

- Duration of startup and shutdown shall not exceed 2 hours each per occurrence. Refractory curing period is defined as a maintenance-based reduced-load period of time during which a unit is brought from a shutdown status to staged rates of firing for the sole purpose of curing new refractory lining of the unit, and shall not exceed 30 hours per occurrence. The operator shall maintain records of the duration of start-up, shutdown, and refractory curing periods. [District Rules 4305, 4306, and 4320]

Section 5.7 Monitoring Provisions

Section 5.7.1 requires that permit units subject to District Rule 4320, Section 5.2 shall either install and maintain an operational APCO approved Continuous Emission Monitoring System (CEMS) for NO_X, CO and O_2, or implement an APCO-approved alternate monitoring.

The permittee proposes to implement Alternate Monitoring Scheme A (pursuant to District Policy SSP-1105), which requires that monitoring of NO_X, CO, and O_2 exhaust concentrations shall be conducted at least once per month (in which a source test is not performed) using a portable analyzer. The following conditions will be incorporated into the ATC to ensure compliance with the requirements of the proposed alternate monitoring plan:

- {4063} The permittee shall monitor and record the stack concentration of NO_X, CO, and O2 at least once every month (in which a source test is not performed) using a portable analyzer that meets District specifications. Measurement shall be made with the FGR system in the mode of operation (closed or open) in which it was used in the preceding 30 days. Monitoring shall not be required if the unit is not in operation, i.e. the unit need not be started solely to perform monitoring. Monitoring shall be performed within 5 days of restarting the unit unless monitoring has been performed within the last month. [District Rules 4305, 4306, and 4320]

- {4064} If either the NO_X or CO concentrations corrected to 3% O2, as measured by the portable analyzer, exceed the allowable emissions concentration, the permittee shall return the emissions to within the acceptable range as soon as possible, but no longer than 1 hour of operation after detection. If the portable analyzer readings continue to exceed the allowable emissions concentration after 1 hour of operation after detection, the permittee shall notify the District within the following 1 hour and conduct a certified source test within 60 days of the first exceedance. In lieu of conducting a source test, the permittee may stipulate a violation has occurred, subject to enforcement action. The permittee must then correct the violation, show compliance has been re-established, and resume monitoring procedures. If the deviations are the result of a qualifying breakdown condition pursuant to Rule 1100, the permittee may fully comply with Rule 1100 in lieu of the performing the notification and testing required by this condition. [District Rules 4305, 4306 and 4320]

- {4065} All alternate monitoring parameter emission readings shall be taken with the unit operating either at conditions representative of normal operations or conditions specified in the permit-to-operate. The analyzer shall be calibrated, maintained, and operated in accordance with the manufacturer's specifications and recommendations or a protocol approved by the APCO. Emission readings taken shall be averaged over a 15 consecutive-minute period by either taking a cumulative 15 consecutive-minute sample reading or by taking at least five (5) readings, evenly spaced out over the 15 consecutive-minute period. [District Rules 4305, 4306 and 4320]

- {4066} The permittee shall maintain records of: (1) the date and time of NO_X, CO, and O2 measurements, (2) the O2 concentration in percent by volume and the measured NOX and CO concentrations corrected to 3% O2, (3) make and model of exhaust gas analyzer, (4) exhaust gas analyzer calibration records, and (5) a description of any corrective action taken to maintain the emissions within the acceptable range. [District Rules 4305, 4306 and 4320]

Section 5.8 Compliance Determination

Section 5.8.1 requires that the operator of any unit shall have the option of complying with either the applicable heat input (lb/MMBtu), emission limits or the concentration (ppmv) emission limits specified in Section 5.2. The emission limits selected to demonstrate compliance shall be specified in the source test proposal pursuant to Rule 1081 (Source Sampling). Therefore, the following condition will be listed on the ATC as follows:

- {2976} The source plan shall identify which basis (ppmv or lb/MMBtu) will be used to demonstrate compliance. [District Rules 4305, 4306 and 4320]

Section 5.8.2 requires that all emissions measurements shall be made with the unit operating either at conditions representative of normal operations or conditions specified in the Permit to Operate. No determination of compliance shall be established within two hours after a continuous period in which fuel flow to the unit is shut off for 30 minutes or longer, or within 30 minutes after a re-ignition as defined in Section 3.0. Therefore, the following permit condition will be listed on the ATC as follows:

- {2972} All emissions measurements shall be made with the unit operating either at conditions representative of normal operations or conditions specified in the Permit to Operate. Unless otherwise specified in the Permit to Operate, no determination of compliance shall be established within two hours after a continuous period in which fuel flow to the unit is shut off for 30 minutes or longer, or within 30 minutes after a re-ignition as defined in Section 3.0. For the purposes of permittee-performed alternate monitoring, emissions measurements may be performed at any time after the unit reaches conditions representative of normal operation. [District Rules 4305, 4306 and 4320]

Section 5.8.4 requires that for emissions monitoring pursuant to Sections 5.7.1 and 6.3.1 using a portable NO_X analyzer as part of an APCO approved Alternate Emissions Monitoring System, emission readings shall be averaged over a 15 consecutive-minute period by either taking a cumulative 15-consecutive-minute sample reading or by taking at least five (5) readings evenly spaced out over the 15-consecutive-minute period. Therefore, the following previously listed permit condition will be on the ATC as follows:

- {4065} All alternate monitoring parameter emission readings shall be taken with the unit operating either at conditions representative of normal operations or conditions specified in the permit-to-operate. The analyzer shall be calibrated, maintained, and operated in accordance with the manufacturer's specifications and recommendations or a protocol approved by the APCO. Emission readings taken shall be averaged over a 15 consecutive-minute period by either taking a cumulative 15 consecutive-minute sample reading or by taking at least five (5) readings, evenly spaced out over the 15 consecutive-minute period. [District Rules 4305, 4306 and 4320]

Section 5.8.5 requires that for emissions source testing performed pursuant to Section 6.3.1 for the purpose of determining compliance with an applicable standard or numerical limitation of this rule, the arithmetic average of three (3) 30-consecutive-minute test runs shall apply. If two (2) of three (3) runs are above an applicable limit the test cannot be used to demonstrate

compliance with an applicable limit. Therefore, the following permit condition will be listed on the permit as follows:

- {2980} For emissions source testing, the arithmetic average of three 30-consecutive-minute test runs shall apply. If two of three runs are above an applicable limit the test cannot be used to demonstrate compliance with an applicable limit. [District Rules 4305, 4306 and 4320]

Section 6.1 Recordkeeping

Section 6.1 requires that the records required by Sections 6.1.1 through 6.1.5 shall be maintained for five calendar years and shall be made available to the APCO and EPA upon request. Failure to maintain records or information contained in the records that demonstrate noncompliance with the applicable requirements of this rule shall constitute a violation of this rule.

A permit condition will be listed on the permit as follows:

- {2983} All records shall be maintained and retained on-site for a minimum of five (5) years, and shall be made available for District inspection upon request. [District Rules 1070, 4305, 4306 and 4320]

Section 6.2, Test Methods

Section 6.2 identifies the following test methods as District-approved source testing methods for the pollutants listed:

Pollutant	Units	Test Method Required
NO_X	ppmv	EPA Method 7E or ARB Method 100
NO_X	lb/MMBtu	EPA Method 19
CO	ppmv	EPA Method 10 or ARB Method 100
Stack Gas O_2	%	EPA Method 3 or 3A, or ARB Method 100
Stack Gas Velocities	ft/min	EPA Method 2
Stack Gas Moisture Content	%	EPA Method 4

The following permit conditions will be listed on the permit as follows:

- {109} Source testing shall be conducted using the methods and procedures approved by the District. The District must be notified at least 30 days prior to any compliance source test, and a source test plan must be submitted for approval at least 15 days prior to testing. [District Rule 1081]

- The following test methods shall be used: NOx (ppmv) - EPA Method 7E or ARB Method 100, NOx (lb/MMBtu) - EPA Method 19, CO (ppmv) - EPA Method 10 or 10B or ARB Method 100, stack gas oxygen - EPA Method 3 or 3Aor ARB Method 100, SOx (lb/MMBtu) - ARB Method 100 or EPA Method 6, 6C or fuel gas sulfur content analysis and EPA Method 19, fuel gas sulfur content - EPA Method 11 or 15, ASTM D3246 or double GC for H2S and mercaptans performed in a laboratory, fuel gas hhv - ASTM D1826 or D1945 in conjunction with ASTM D3588. [District Rules 4305, 4306 and 4320]

Section 6.3, Compliance Testing

Section 6.3.1 requires that each unit subject to the NOx and CO emission limits shall be source tested at least once every 12 months, except if two consecutive annual source tests demonstrate compliance, source testing may be performed every 36 months. If such a source test demonstrates non-compliance, source testing shall revert to every 12 months. The following conditions will be included in the ATCs:

- This unit shall be tested for compliance with the NOx and CO emissions limits at least once every twelve (12) months. After demonstrating compliance on two (2) consecutive annual source tests, the unit shall be tested not less than once every thirty-six (36) months. If the result of the 36-month source test demonstrates that the unit does not meet the applicable emission limits, the source testing frequency shall revert to at least once every twelve (12) months. [District Rules 4305, 4306 and 4320]

- Source testing to measure NOx, and CO emissions shall be conducted within 60 days of initial operation under this ATC and whenever flue gas recirculation rate is changed. [District Rules 2201, 4305, 4306 and 4320]

- {110} The results of each source test shall be submitted to the District within 60 days thereafter. [District Rule 1081]

Section 6.4, Emission Control Plan (ECP)

Section 6.4 requires the operator of any unit to submit to APCO for approval an Emissions Control Plan no later than January 1, 2010. The applicant is not yet an operator of the boiler, so an ECP is not due yet.

Section 7.0, Compliance Schedule

Section 7.0 identifies the dates by which the operator shall submit an application for an ATC and the date by which the owner shall demonstrate compliance with this rule.

The units will be in compliance with the emissions limits listed in Table 1, Section 5.2 of this rule, and periodic monitoring and source testing as required by District Rule 4320. Therefore, requirements of the compliance schedule, as listed in Section 7.0 of District Rule 4320, are satisfied. No further discussion is required.

Conclusion

Conditions will be incorporated into the ATC in order to ensure compliance with each section of this rule, see attached draft ATC. Therefore, compliance with District Rule 4320 requirements is expected.

Rule 4311 - Flares

The purpose of this rule is to limit the emissions of volatile organic compounds (VOC), oxides of nitrogen (NOx), and sulfur oxides (SOx) from the operation of flares.

Section 4.0 - Exemptions

The flares in this project do not qualify for any of the exemptions in this rule.

Section 5.0 - Requirements

Section 5.1 states that flares that are permitted to operate only during an emergency are not subject to the requirements of Sections 5.6 and 5.7. Of the three proposed flares, only flare S-7616-7-0 is an emergency flare. Therefore, the requirements of 5.6 and 5.7 will be applicable to that flare.

Section 5.2 requires a flame to be present at all times when combustible gases are vented through the flare.

The following condition on ATCs S-7616-3-0 and -6-0 will ensure compliance with Section 5.2:

- A flame shall be present at all times when combustible gases are vented through this flare. [District Rules 2201 and 4311, 5.2]

Section 5.3 requires the flare outlet to be equipped with an automatic ignition system, or, to operate with a pilot flame present at all times when combustible gases are vented through the flare, except during purge periods for automatic-ignition equipped flares.

The following condition on ATCs S-7616-3-0 and -6-0, and -7-0 will ensure compliance with Section 5.3:

- This flare shall be equipped with an automatic ignition system. [District Rules 2201 and 4311, 5.3]

Except for flares equipped with a flow-sensing ignition system, Section 5.4 requires the flare be equipped with a heat sensing device such as a thermocouple, ultraviolet beam sensor, infrared sensor, or an equivalent device, capable of continuously detecting at least one pilot flame or the flare flame is present to be installed and operated.

The flare has a continuous pilot; therefore, the following condition will be included on ATCs S-7616-3-0, -6-0, and -7-0 to ensure compliance with Section 5.4:

- A flame sensing or heat sensing device such as a thermocouple, ultraviolet beam sensor, infrared sensor, or an equivalent device, capable of continuously detecting at least one pilot flame or the flare flame is present shall be operational. [District Rule 4311, 5.4]

Section 5.5 requires flares that use flow-sensing automatic ignition systems and which do not use a continuous flame pilot shall use purge gas for purging. This flare is equipped with a continuous pilot; therefore, this section is not applicable.

Section 5.6 requires open flares (air-assisted, steam-assisted, or non-assisted) in which the flare gas pressure is less than 5 psig shall be operated in such a manner that meets the provisions of 40 CFR 60.18.

The flare gas pressure is greater than or equal to 5 psig for the gasification flare S-7616-3-0; therefore, Section 5.6 and 40 CFR 60.18 are not applicable for that flare. The following condition will appear on the ATC to ensure compliance:

- Flare gas pressure shall not be less than 5 psig when incinerating combustible gasses. [District Rule 4311, 5.6]

However, the flare gas pressure is less than 5 psig for the SRU flare S-7616-6-0 which is an open flare; therefore, Section 5.6 and 40 CFR 60.18 apply to that flare.

<u>40 CFR 60.18</u>

(c)(1) This subpart requires no visible emissions, as discussed above under Rule 4101. The flare shall be designed for and operated with no visible emissions as determined by EPA Method 22, except for periods not to exceed a total of 5 minutes during any 2 consecutive hours. The following permit conditions will be included on ATC S-7616-6:

- No air contaminant shall be discharged into the atmosphere for a period or periods aggregating more than five minutes in any two hours which is as dark as, or darker than, Ringelmann 1/4 or 5% opacity. [District Rule 4101 and 40 CFR 60.18]

- A trained observer, as defined in EPA Method 22, shall check visible emissions at least once annually for a period of 15 minutes. If visible emissions are detected at any time during this period, the observation period shall be extended to two hours. A record containing the results of these observations shall be maintained, which also includes company name, process unit, observer's name and affiliation, date, estimated wind speed and direction, sky condition, and the observer's location relative to the source and sun. [District Rules 4311]

(c)(2) This subpart requires a flame to be present at all times. The flare shall be operated with a flame present at all times. Presence of a flame shall be monitored using a thermocouple or equivalent device to detect the presence of a flame. The flare is equipped with a pilot flame monitoring device.

The following two conditions included on ATC S-7616-6-0 require a continuous pilot flame and smokeless combustion:

- Flare shall be operated with a flame present at all times, and kept in operation when emissions may be vented to it. The presence of a flare pilot flame shall be monitored using a thermocouple or any other equivalent device to detect the presence of a flame. [District Rule 4001 and 4311]

- The flame shall be present at all times when combustible gases are vented through the flare. [District Rule 4311, 5.2 and 40 CFR 60.18(c)(2)]

(c)(3) This subpart gives the operator the option of complying with either (c)(3)(i), or (c)(3)(ii) and (c)(4).

- 90 days prior to installation, the applicant shall demonstrate to the District how compliance with 40 CFR 60.16 (c)(3) shall be satisfied. Compliance with either subparts (c)(3)(i), or (c)(3)(ii) and (c)(4) shall be demonstrated to the District. [40 CFR 60.18 (c)(3)]

(c)(3)(i) This subpart states that flares shall be used that have a diameter of 3 inches or greater, are nonassisted, have a hydrogen content of 8.0 percent (by volume), or greater, and are designed for and operated with an exit velocity less than 122 ft/sec and less than the velocity, Vmax, as determined in that section.

The following condition will be added to S-7616-6-0:

- If the permittee opts to comply with 40 CFR 60.16 (c)(3)(i), a non-assisted flare shall have a diameter of 3 inches or greater, have a minimum hydrogen content of 8.0% by volume, and be designed for and operated with an exit velocity less than 122 ft/sec and less than the velocity Vmax, as determined by the equation specified in paragraph 40 CFR 60.18 (c)(3)(i)(A). [40 CFR 60.18 (c)(3)(i)(a)]

(c)(3)(ii) This subpart lists the minimum heating value of gas being combusted in a non-assisted flare as 200 Btu/scf.

- If the permittee opts to comply with 40 CFR 60.16 (c)(3)(ii) and (c)(4), the heating value of the gas combusted in the flare shall be at least 200 Btu/scf. [District Rule 4311 and 40 CFR 60.18]

(c)(4)(i) This subpart lists a maximum velocity for nonassited flares as 60 ft/sec, except as provided by (c)(4)(ii) and (c)(4)(iii).

(c)(4)(ii) This subpart lists a maximum exit velocity of 400 ft/sec when the gas being combusted has a heating value of 1,000 Btu/scf. Based on the heat input rating and diameter of the flare, it will not operate with an exit velocity of 400 ft/sec or greater.

Compliance with this subpart is expected, and the following conditions will be added to S-7616-6-0:

- If the permittee opts to comply with 40 CFR 60.16 (c)(3)(ii) and (c)(4), non-assisted flares may be operated with an exit velocity equal to or greater than 60 ft/sec, but less than 400 ft/sec, if the net heating value of the gas being combusted is greater than 1,000 Btu/scf. [40 CFR 60.18 (c)(4)]

- If the permittee opts to comply with 40 CFR 60.16 (c)(3)(ii) and (c)(4), non-assisted flares shall be operated with an exit velocity less than 60 ft/sec, except as provided in 40 CFR 60.18 (c)(4)(ii) and (iii). [40 CFR 60.18 (c)(4)]

(c)(4)(iii) This subpart sets a maximum exit velocity, based on the heating value of the gas combusted and the equation listed in (f)(5).

The following conditions will be added to S-7616-6-0:

- If the permittee opts to comply with 40 CFR 60.16 (c)(3)(ii) and (c)(4), non-assisted flares may be operated with an exit velocity less than the velocity Vmax, as determined by the methods specified in 40 CFR 60.18 (f)(5), and less than 400 ft/sec. [40 CFR 60.18 (c)(4)(iii)]

(d) This subpart requires the owner or operator to monitor the flare to ensure it is operated and maintained in conformance with its design.

(e) This subpart requires that the flare be operational when emissions may be vented to the flare. The presence of a continuous pilot flame will ensure that the flare is operational.

The following condition is included on S-7616-6-0:

- Flare shall be operated with a flame present at all times, and kept in operation when emissions may be vented to it. The presence of a flare pilot flame shall be monitored using a thermocouple or any other equivalent device to detect the presence of a flame. [District Rule 4001 and 4311]

(f) This subpart lists the methods and equations to be used to demonstrate compliance with the paragraphs of this subpart. Compliance with the above-listed conditions ensures compliance with this paragraph.

- The net heating value of the gas being combusted the flare shall be calculated pursuant to 40 CFR 60.18(f)(3) or by using EPA Method 18, ASTM D1946, and ASTM D2382 if published values are not available or cannot be calculated. [40 CFR 60.18 (f)(3)]

- The flare shall be inspected during operation for visible emissions, using EPA Method 22. If visible emissions are observed, corrective action shall be taken. If visible emissions cannot be eliminated, an EPA Method 9 test shall be conducted within 72 hours. [District Rule 2201 and 40 CFR 60.18(f)(1)]

- The outlet shall be equipped with an automatic ignition system, or, shall operate with a pilot flame present at all times when combustible gases are vented through the flare, except during purge periods for automatic-ignition equipped flares. [District Rule 4311, 5.3 and 40CFR 60.18(f)(2)]

- Except for flares equipped with a flow-sensing ignition system, a heat sensing device such as a thermocouple, ultraviolet beam sensor, infrared sensor, or an equivalent device, capable of continuously detecting at least one pilot flame or the flare flame is present shall be installed and operated. [District Rule 4311, 5.4 and 40CFR 60.18(f)(2)]

- The actual exit velocity of a flare shall be determined by dividing the volumetric flowrate (in units of standard temperature and pressure), as determined by Reference Methods 2, 2A, 2C, or 2D as appropriate; by the unobstructed (free) cross sectional area of the flare tip. [40 CFR 60.18 (f)(4)]

Section 5.7 applies to ground level enclosed flares. The proposed flares are not ground level enclosed flares; therefore, this section is not applicable.

Section 5.8 requires by July 1, 2010, the operator of a petroleum refinery flare or any flare that has a flaring capacity of greater than or equal to 5.0 MMBtu per hour to submit a flare minimization plan (FMP) to the APCO for approval. All three proposed flares have a capacity greater than 5.0 MMBtu/hr. Therefore, the following condition will be included on their permits:

- 90 days prior to installation of the flare, permittee shall submit a flare minimization plan (FMP) that complies with the requirements of Rule 4311 Section 6.5 to the APCO for approval. [District Rule 4311, 6.5]

Section 5.10 states that effective on and after July 1, 2011, the operator of a flare subject to flare minimization requirements pursuant to Section 5.8 shall monitor the vent gas flow to the flare with a flow measuring device or other parameters as specified in the permit. The operator shall maintain records pursuant to Section 6.1.7.

- Flare shall be equipped with flare gas volume flowmeter. [District Rule 2201]

<u>Section 6.0 - Administrative Requirements</u>
<u>Section 6.1 - Recordkeeping</u>

Section 6.1.1 requires the operator of flares that are subject to Section 5.6 to make available to the APCO upon request the compliance determination records that demonstrate compliance with the provisions of 40 CFR 60.18, (c)(3) through (c)(5).
Only flare S-7616-3 is subject to Section 5.6; therefore, Section 6.1.1 is applicable to that flare. Therefore the following conditions will be included on the permit:

- Upon request, operator shall make available to the APCO the compliance determination records that demonstrate compliance with the provisions of 40 CFR 60.18. [District Rule 4311, 6.1]

- Semi-annual reports of all periods without the presence of a flare pilot flame shall be furnished to the District Compliance Division and EPA. [District Rule 4001 and 40CFR 60.115b(d)(3)]

- The permittee shall keep accurate daily records of the amount of gas combusted in the flare, hours of operation, the sulfur content and heat content of the gas combusted, and records demonstrating compliance with the provisions of 40 CFR 60.18, (c)(3) through (c)(5). The permittee shall keep these records for a period of at least five years and shall make such records available for District inspection upon request. [District Rules 2201 and 4311]

Section 6.1.2 applies to ground level enclosed flares. None of the proposed flare will be ground level enclosed flare; therefore, this section is not applicable.

Section 6.1.3 requires for flares used during an emergency that records of the duration of flare operation, amount of gas burned, and the nature of the emergency situation be maintained. The following conditions will be added to S-7616-7:

- Records of the duration of flare operation, amount of gas burned, and the nature of the emergency situation for flare used during an emergency situation shall be made readily available to the APCO, ARB, and EPA upon request for a minimum of 5 years. [District Rule 4311, Section 6.1]

Section 6.1.5 requires the permittee to retain on site a copy of the approved flare minimization plan effective on and after July 1, 2011. The following condition will be included on all three permits:

- Copies of approved flare minimization plan pursuant to Rule 4311 Section 6.5 shall be made readily available to the APCO, ARB, and EPA upon request for a minimum of 5 years. [District Rule 4311, Section 6.1]

Section 6.1.6 requires the permittee to retain a copy of annual reports submitted to the APCO pursuant to Section 6.2. effective on and after July 1, 2012. The following condition will be included on all three permits:

- Copies of compliance determination pursuant to 40 CFR 60.18 shall be made readily available to the APCO, ARB, and EPA upon request for a minimum of 5 years. [40 CFR 60.18, District Rule 4311, Section 6.1]

Section 6.1.7 requires the permittee to retain monitoring data, where applicable, collected pursuant to Sections 5.10, 6.6, 6.7, 6.8, 6.9, and 6.10 effective on and after July 1, 2011. Section 5.10 (flare minimization vent gas flow rate) applies, therefore monitoring data for that section will be required. Monitoring for the other section applies only to petroleum refinery flares. The following condition will be included on all three permits:

- Copies of monitoring data collected pursuant to Rule 4311 Section 5.10 shall be made readily available to the APCO, ARB, and EPA upon request for a minimum of 5 years. [District Rule 4311, Section 6.1]

Section 6.2 - Flare Reporting

Section 6.2.1 states that effective on and after July 1, 2011, the operator of a flare subject to flare minimization plans pursuant to Section 5.8 of this rule shall notify the APCO of an unplanned flaring event within 24 hours after the start of the next business day or within 24 hours of their discovery, which ever occurs first. The notification shall include the flare source identification, the start date and time, and the end date and time. The following condition will be included on all three permits:

- Effective on and after July 1, 2011, the operator shall notify the APCO of an unplanned flaring event within 24 hours after the start of the next business day or within 24 hours of their discovery, which ever occurs first. The notification shall include the flare source identification, the start date and time, and the end date and time. [District Rule 4311, Section 6.2]

Section 6.2.2 states that effective on and after July 1, 2012, and annually thereafter, the operator of a flare subject to flare minimization plans pursuant to Section 5.8 shall submit an annual report to the APCO that summarizes all Reportable Flaring Events as defined in Section 3.0 that occurred during the previous 12 month period. The report (as described in that section) shall be submitted within 30 days following the end of the twelve month period of the previous year. The following condition will be included on all three permits:

- Effective on and after July 1, 2012, and annually thereafter, the operator of a flare subject to flare minimization plans pursuant to Section 5.8 shall submit an annual report to the APCO that summarizes all Reportable Flaring Events as defined in Rule 4311 Section 3.0 that occurred during the previous 12 month period. The report shall be submitted within 30 days following the end of the twelve month period of the previous year. [District Rule 4311, Section 6.2]

Section 6.2.3 states that effective on and after July 1, 2012, and annually thereafter, the operator of a flare subject to flare monitoring requirements pursuant to Sections 5.10, 6.6, 6.7, 6.8, 6.9, and 6.10, as appropriate, shall submit an annual report to the APCO within 30 days following the end of each 12 month period. The report shall include components specified in Section 6.2.3.1 through 6.2.3.8. Section 5.10 (flare minimization vent gas flow rate) applies, therefore monitoring data for that section will be required. Monitoring for the other section applies only to petroleum refinery flares. The following condition will be included on all three permits:

- Effective on and after July 1, 2012, and annually thereafter, the operator of a flare subject to flare monitoring requirements pursuant to Sections 5.10, 6.6, 6.7, 6.8, 6.9, and 6.10, as appropriate, shall submit an annual report to the APCO as specified in Rule 4311 Section 6.2.3 within 30 days following the end of each 12 month period. [District Rule 4311, Section 6.2]

Section 6.4 - Compliance Determination

Section 6.4.1 states that upon request, the operator of flares that are subject to Section 5.6 shall make available, to the APCO, the compliance determination records that demonstrate compliance with the provisions of 40 CFR 60.18, (c)(3) through (c)(5). Flare S-7616-6 is subject to Section 5.6. Therefore, the following condition will be included in the permit:

- Upon request, operator shall make available to the APCO the compliance determination records that demonstrate compliance with the provisions of 40 CFR 60.18. [District Rule 4311, 6.1]

Section 6.4.2 applies to ground-level enclosed flares, which the applicant it not proposing.

Section 6.5 - Flare Minimization Plan

Section 6.5.1 requires the operator of a petroleum refinery flare or any flare that has a flaring capacity of greater than or equal to 5.0 MMBtu per hour to submit a flare minimization plan (FMP) to the APCO for approval. The following condition is included on the permits:

- The operator shall submit a flare minimization plan (FMP) as specified in Rule 4311 Section 6.5 to the APCO for approval. [District Rule 4311, 6.5]

Sections 6.6, 6.7, 6.8, and 6.9 are applicable to flares with an hourly heat input exceeding 50 MMBtu/hr and therefore only apply to flare S-7616-3.

Section 6.6 - Vent Gas Composition Monitoring

Section 6.6 requires effective on and after July 1, 2011, the operator of a petroleum refinery flare or any flare that has a flaring capacity equal to or greater than 50 MMBtu per hour shall monitor vent gas composition using one of the five methods pursuant to Section 6.6.1 through Section 6.6.5 as appropriate. Therefore, the following conditions will be included on permit S-7616-3:

- Effective on and after July 1, 2011, pursuant to Rule 4311 Section 6.6, the operator shall monitor vent gas composition using one the methods pursuant to Section 6.6.1 through Section 6.6.5 as appropriate. [District Rule 4311, Section 6.6]

Section 6.7 – Pilot and Purge Gas Monitoring

Section 6.7 requires effective on and after July 1, 2011, the operator of a petroleum refinery flare or any flare that has a flaring capacity equal to or greater than 50 MMBtu per hour to monitor the volumetric flows of purge and pilot gases with flow measuring devices or other parameters as specified on the Permit to Operate so that volumetric flows of pilot and purge gas may be calculated based on pilot design and the parameters monitored. Therefore, the following condition will be included on S-7616-3:

- Effective on and after July 1, 2011, the operator shall monitor the volumetric flows of purge and pilot gases with flow measuring devices. [District Rule 4311, Section 6.7]

Section 6.8 – Water Seal Monitoring

Section 6.8 requires effective on and after July 1, 2011, the operator of a petroleum refinery flare or any flare that has a flaring capacity equal to or greater than 50 MMBtu per hour with a water seal shall monitor and record the water level and pressure of the water seal that services each flare daily or as specified on the Permit to Operate. Therefore, the following condition will be included on S-7616-3:

- Effective on and after July 1, 2011, if the flare is equipped with a water seal, the operator shall monitor and record the water level and pressure of the water seal that services each flare daily. [District Rule 4311, Section 6.8]

Section 6.9 - General Monitoring

Section 6.9 requires effective on and after July 1, 2011, the operator of a petroleum refinery flare or any flare that has a flaring capacity equal to or greater than 50 MMBtu per hour shall comply with the following, as applicable:

Section 6.9.1 states that periods of flare monitoring system in operation greater than 24 continuous hours shall be reported by the following working day, followed by notification of resumption of monitoring. Periods of inoperation of monitoring equipment shall not exceed 14 days per any 18-consecutive-month period. Periods of flare monitoring system inoperation do not include the periods when the system feeding the flare is not operating.

Section 6.9.2 states that during periods of inoperation of continuous analyzers or auto-samplers installed pursuant to Section 6.6, operators responsible for monitoring shall take one sample within 30 minutes of the commencement of flaring, from the flare header or from an alternate location at which samples are representative of vent gas composition and have samples analyzed pursuant to Section 6.3.4. During periods of inoperation of flow monitors required by Section 5.10, flow shall be calculated using good engineering practices.

Section 6.9.3 state that the permittee shall maintain and calibrate all required monitors and recording devices in accordance with the applicable manufacturer's specifications. In order to claim that a manufacturer's specification is not applicable, the person responsible for emissions must have, and follow, a written maintenance policy that was developed for the device in question. The written policy must explain and justify the difference between the written procedure and the manufacturer's procedure.

Section 6.9.4 states that all in-line continuous analyzer and flow monitoring data must be continuously recorded by an electronic data acquisition system capable of one-minute averages. Flow monitoring data shall be recorded as one-minute averages.

Therefore the following conditions will be included on S-7616-3:

- Effective on and after July 1, 2011, periods of flare monitoring system in operation greater than 24 continuous hours shall be reported by the following working day, followed by notification of resumption of monitoring. Periods of inoperation of monitoring

equipment shall not exceed 14 days per any 18-consecutive-month period. Periods of flare monitoring system inoperation do not include the periods when the system feeding the flare is not operating. [District Rule 4311, Section 6.9]

- Effective on and after July 1, 2011, during periods of inoperation of continuous analyzers or auto-samplers installed pursuant to Section 6.6, operators responsible for monitoring shall take one sample within 30 minutes of the commencement of flaring, from the flare header or from an alternate location at which samples are representative of vent gas composition and have samples analyzed pursuant to Section 6.3.4. During periods of inoperation of flow monitors required by Section 5.10, flow shall be calculated using good engineering practices. [District Rule 4311, Section 6.9]

- Effective on and after July 1, 2011, operator shall maintain and calibrate all required monitors and recording devices in accordance with the applicable manufacturer's specifications. In order to claim that a manufacturer's specification is not applicable, the person responsible for emissions must have, and follow, a written maintenance policy that was developed for the device in question. The written policy must explain and justify the difference between the written procedure and the manufacturer's procedure. [District Rule 4311, Section 6.9]

- Effective on and after July 1, 2011, all in-line continuous analyzer and flow monitoring data must be continuously recorded by an electronic data acquisition system capable of one-minute averages. Flow monitoring data shall be recorded as one-minute averages. [District Rule 4311, Section 6.9]

Section 6.10 – Video Monitoring

This section is not applicable as it addresses petroleum refinery flares.

Section 7.0 Compliance Schedule

Operators of flares, that are exempt under Section 4.0 and that lose exemption status, shall not operate flares until in full compliance with all applicable requirements of this rule effective on the date the exemption status is lost. The flares are not exempt under Section 4.0. Therefore, this section is not applicable.

Compliance with the rule is expected.

Rule 4351 - Boilers, Steam Generators and Process Heaters – Phase 1

This rule does not apply to any unit located west of Interstate Highway 5 located in Fresno, Kern, or Kings county. Since the operation is located west of Interstate Highway 5 in Kern County, this rule does not apply.

Rule 4701 - Internal Combustion Engines – Phase 1

Pursuant to Section 7.5.2.3 of District Rule 4702, as of June 1, 2006 District Rule 4701 is no longer applicable to diesel-fired emergency standby or emergency IC engines. Therefore, this diesel-fired emergency IC engine will comply with the requirements of District Rule 4702 and no further discussion is required.

Rule 4702 - Internal Combustion Engines – Phase 2

The purpose of this rule is to limit the emissions of nitrogen oxides (NO_X), carbon monoxide (CO), and volatile organic compounds (VOC) from internal combustion engines.

This rule applies to any internal combustion engine with a rated brake horsepower greater than 50 horsepower.

Pursuant to Section 4.3, except for the requirements of Section 6.2.3, the requirements of this rule shall not apply to an internal combustion engine that meets the following conditions:

1) The engine is operated exclusively to preserve or protect property, human life, or public health during a disaster or state of emergency, such as a fire or flood, and
2) Except for operations associated with Section 4.3.1.1, the engine is limited to operate no more than 100 hours per calendar year as determined by an operational nonresettable elapsed operating time meter, for periodic maintenance, periodic readiness testing, and readiness testing during and after repair work of the engine, and
3) The engine is operated with a nonresettable elapsed operating time meter. In lieu of installing a nonresettable time meter, the owner of an engine may use an alternative device, method, or technique, in determining operating time provided that the alternative is approved by the APCO. The owner of the engine shall properly maintain and operate the time meter or alternative device in accordance with the manufacturer's instructions.

Therefore, the emergency IC engines involved with this project will only have to meet the requirements of Section 6.2.3 of this Rule.

Section 6.2.3 requires that an owner claiming an exemption under Section 4.2 or Section 4.3 shall maintain annual operating records. This information shall be retained for at least five years, shall be readily available, and submitted to the APCO upon request and at the end of each calendar year in a manner and form approved by the APCO. Therefore, the following conditions will be listed on the emergency engine ATCs to ensure compliance:

S-7616-16-0 (Emergency Engine Powering Firewater Pump) only

- {3488} This engine shall be operated only for maintenance, testing, required regulatory purposes, and during emergency situations. For testing purposes, the engine shall only be operated the number of hours necessary to comply with the testing requirements of the National Fire Protection Association (NFPA) 25 - "Standard for the Inspection, Testing, and Maintenance of Water-Based Fire Protection Systems", 1998 edition. Total hours of operation for all maintenance, testing, and required regulatory purposes shall not exceed 100 hours per calendar year. [District Rule 4702 and 17 CCR 93115]

S-7616-14-0 and -15-0 (Emergency Engines Powering Electrical Generators) only

- This engine shall be operated only for testing and maintenance of the engine, required regulatory purposes, and during emergency situations. Operation of the engine for maintenance, testing, and required regulatory purposes shall not exceed 50 hours per calendar year. [District Rule 4702 and 17 CCR 93115]

S-7616-14-0 and -15-0 (Emergency Engines Powering Electrical Generators)
S-7616-16-0 (Emergency Engine Powering Firewater Pump)

- {3489} The permittee shall maintain monthly records of emergency and non-emergency operation. Records shall include the number of hours of emergency operation, the date and number of hours of all testing and maintenance operations, and the purpose of the operation (for example: load testing, weekly testing, rolling blackout, general area power outage, etc.). For units with automated testing systems, the operator may, as an alternative to keeping records of actual operation for testing purposes, maintain a readily accessible written record of the automated testing schedule. [District Rule 4702 and 17 CCR 93115]

- {3475} All records shall be maintained and retained on-site for a minimum of five (5) years, and shall be made available for District inspection upon request. [District Rule 4702 and 17 CCR 93115]

In addition, the following condition will be listed on the ATCs to ensure compliance:

- {3404} This engine shall be equipped with an operational non-resettable elapsed time meter or other APCO approved alternative. [District Rule 4702]

Rule 4703 - Stationary Gas Turbines

Rule 4703 is applicable to stationary gas turbines with a rating greater than 0.3 megawatts, and it defines a gas turbine as "an internal combustion engine consisting of a compressor, a combustor, and a power turbine that is gas and/or liquid fueled, with or without power augmentation." This rule defines "gas fuel" as "any of the following fuels or fuels containing any of the following fuels: natural gas, LPG, propane, digester gas, and landfill gas."

Hydrogen-rich fuel is not considered gas fuel per the definition, so this rule will not apply when the proposed CTG is firing on hydrogen-rich fuel. However, when firing on natural gas or a combination of fuels containing natural gas, the requirements of this rule do apply.

Section 5.1 – NOx Emission Requirements:

The facility proposes to install one 333 MW gas turbine, therefore this rule applies. Section 5.1.2 (Table 5-2: Tier 2 NOx Compliance Limits) of this rule limits the NO_X emissions from combined cycle gas turbines greater than 10 MW to 5 ppmv @ 15% O_2 (Standard option) and 3 ppmv @ 15% O_2 (Enhanced Option) for gas fuel. Section 7.2.1 (Table 7-1: Tier 2 Standard Option Compliance Schedule) sets a compliance date of April 30, 2004 for the Standard Option,

and Section 7.2.4 sets a compliance date of April 30, 2008 for the Enhanced Option for gas turbines whose operators chose to delay compliance to the enhanced option.

As discussed above, the proposed turbine will be limited to 5 ppmv @ 15% O_2 (based on a 1-hour average), therefore compliance with this section is expected. The following condition will ensure continued compliance with the requirements of this section:

- Emission rates from the combustion turbine generator, except during startup and shutdown periods, shall not exceed any of the following: NOx (as NO2) – 21.0 lb/hr and 2.0 ppmvd-NOx @ 15% O_2 (3-hour rolling average) or 2.5 ppmvd @ 15% O_2 (1-hour average), (except during startup/shutdown); VOC (as methane) – 5.5 lb/hr and 1.0 ppmvd-VOC @ 15% O2 when firing on hydrogen-rich fuel exclusively and 1.5 ppmvd @ 15% O2 when firing on fuel containing natural gas; CO – 25.6 lb/hr and 3.0 ppmvd-CO @ 15% O2 when firing on hydrogen-rich fuel exclusively and 4.0 ppmvd-CO @ 15% O2 when firing on fuel containing natural gas; PM10 – 19.8 lb/hr; or SOx (as SO2) – 6.8 lb/hr. The hourly rolling averages for NOx (as NO2) emission limits indicated above. All other pollutant emission limits are three-hour rolling averages. [District Rules 2201 and 4703 and 40 CFR 60.4320(a) & (b)]

<u>Section 5.2 – CO Emission Requirements</u>:

Per section 5.2 (Table 5-4: CO Compliance Limits), the CO emissions concentration from the gas turbine must be less than 200 ppmvd @ 15% O_2. Rule 4703 does not include a specific averaging period requirement for demonstrating compliance with the CO emission limit. However, District practice is to have an applicant demonstrate compliance with the CO emissions on a turbine with three hour averaging periods. Therefore, compliance with the CO emission limit shall be demonstrated by an average over a three hour period.

The CO emission concentration will be limited to 3.0 ppmvd-CO @ 15% O2 when firing on hydrogen-rich fuel exclusively and 4.0 ppmvd-CO @ 15% O2 when firing on fuel containing natural gas, and compliance shall be demonstrated using three-hour rolling average periods. Therefore, the proposed turbines will be operating the turbine in compliance with the CO emission requirements of this rule. The following condition will ensure continued compliance with the requirements of this section:

- Emission rates from the combustion turbine generator, except during startup and shutdown periods, shall not exceed any of the following: NOx (as NO2) – 21.0 lb/hr and 2.0 ppmvd-NOx @ 15% O_2 (3-hour rolling average) or 2.5 ppmvd @ 15% O_2 (1-hour average), (except during startup/shutdown); VOC (as methane) – 5.5 lb/hr and 1.0 ppmvd-VOC @ 15% O2 when firing on hydrogen-rich fuel exclusively and 1.5 ppmvd @ 15% O2 when firing on fuel containing natural gas; CO – 25.6 lb/hr and 3.0 ppmvd-CO @ 15% O2 when firing on hydrogen-rich fuel exclusively and 4.0 ppmvd-CO @ 15% O2 when firing on fuel containing natural gas; PM10 – 19.8 lb/hr; or SOx (as SO2) – 6.8 lb/hr. The hourly rolling averages for NOx (as NO2) emission limits indicated above. All other pollutant emission limits are three-hour rolling averages. [District Rules 2201 and 4703 and 40 CFR 60.4320(a) & (b)]

Section 5.3 – Transitional Operation Periods Requirements:

This section states that the emission limit requirements of Sections 5.1 and 5.2 shall not apply during startup, shutdown, or a reduced load period provided an operator complies with the requirements specified below:

- The duration of each startup or each shutdown shall not exceed two hours, and the duration of each reduced load period shall not exceed one hour, except as provided below.
- The emission control system shall be in operation and emissions shall be minimized insofar as technologically feasible during startup, shutdown, or a reduced load period.
- An operator may submit an application to allow more than two hours for each startup or each shutdown or more than one hour for each reduced load period provided the operator meets all of the conditions specified in the rule.

The permittee is proposing to incorporate startup and shutdown provisions into the operating requirements for the turbine. The applicant had proposed that the duration of each startup and shutdown will last no more than the following: each cold startup: 3 hour; each hot startup: 1 hour; each shutdown: 0.5 hour. The SCR system and oxidation catalyst will be in operation during startup and shutdown in order to minimize emissions insofar as technologically feasible during startups and shutdowns. Therefore, the proposed turbine will be operating in compliance with the startup and shutdown requirements of this rule. The following conditions will ensure continued compliance with the requirements of this section:

- During periods of cold startup, CTG exhaust emission rates shall not exceed any of the following limits: NOx (as NO2) – 90.7 lb/hr, SOx – 5.1 lb/hr, PM10 – 19.0 lb/hr, CO – 1,679.7 lb/hr, or VOC – 266.7 lb/hr, based on one-hour averages. [District Rule 2201]

- During periods of hot startup, CTG exhaust emission rates shall not exceed any of the following limits: NOx (as NO2) – 167.0 lb/hr, SOx – 5.1 lb/hr, PM10 – 19.8 lb/hr, CO – 394.0 lb/hr, or VOC – 98.0 lb/hr, based on one-hour averages. [District Rule 2201]

- During periods of shutdown, CTG exhaust emission rates shall not exceed any of the following limits: NOx (as NO2) – 62.0 lb/hr, SOx – 2.6 lb/hr, PM10 5.0 lb/hr, CO – 126.0 lb/hr, or VOC – 21.1 lb/hr, based on one- hour averages. [District Rule 2201]

- Startup shall be defined as the period of time during which a unit is brought from a shutdown status to its operating temperature and pressure, including the time required by the unit's emission control system to reach full operations. Hot startup is startup after 24 hours or less downtime and cold startup is startup after greater than 24 hours. Shutdown shall be defined as the period of time during which a unit is taken from an operational to a non-operational status as the fuel supply to the unit is completely turned off. [District Rules 2201 and 4703]

- The duration of each startup and shutdown shall not exceed any of the following: 3 hours for each cold startup, 1 hour for each hot startup, and 0.5 hour for each shutdown. Startup and shutdown emissions shall be counted toward all applicable emission limits. [District Rules 2201 and 4703]

- The emission control systems shall be in operation and emissions shall be minimized insofar as technologically feasible during startup and shutdown. [District Rule 4703]

Section 6.2 - Monitoring and Recordkeeping:

Section 6.2.1 requires the owner to operate and maintain continuous emissions monitoring equipment for NO_X and oxygen, or install and maintain APCO-approved alternate monitoring. As discussed earlier in this evaluation, the applicant operates a Continuous Emissions Monitoring System (CEMS) that monitors the NO_X and oxygen content of the turbine exhaust. Therefore, the requirements of this section have been satisfied. The following condition will ensure continued compliance with the requirements of this section:

- The owner or operator shall install, certify, maintain, operate and quality-assure a Continuous Emission Monitoring System (CEMS) which continuously measures and records the exhaust gas NOx, CO and O2 concentrations. Continuous emissions monitor(s) shall be capable of monitoring emissions during normal operating conditions, and during startups and shutdowns provided the CEMS pass the relative accuracy requirement for startups and shutdowns specified herein. If relative accuracy of CEMS cannot be demonstrated during startup conditions, CEMS results during startup and shutdown events shall be replaced with startup emission rates obtained from source testing to determine compliance with emission limits contained in this document. [District Rules 1080, 2201, and 4703 and 40 CFR 60.4335(b)(1)]

Section 6.2.2 specifies monitoring requirements for turbines without exhaust-gas NO_X control devices. Each of the proposed turbines will be equipped with an SCR system that is designed to control NO_X emissions. Therefore, the requirements of this section are not applicable and no further discussion is required.

Section 6.2.3 requires that for units 10 MW and greater that operated an average of more than 4,000 hours per year over the last three years before August 18, 1994, the owner or operator shall monitor the exhaust gas NO_X emissions. The proposed turbine will be a new installation. Therefore, it was not in operation prior to August 18, 1994 and the requirements of this section are not applicable. No further discussion is required.

Section 6.2.4 requires the facility to maintain all records for a period of five years from the date of data entry and shall make such records available to the APCO upon request. The permittee will be required to maintain all records for at least five years and make them available to the APCO upon request. Therefore, the proposed turbines will be operating in compliance with the five year recordkeeping requirements of this rule. The following condition will ensure continued compliance with the requirements of this section:

- All records shall be maintained and retained on-site for a period of at least 5 years and shall be made available for District inspection upon request. [District Rules 1070, 2201, and 4703]

Section 6.2.5 requires that the owner or operator shall submit to the APCO, before issuance of the Permit to Operate, information correlating the control system operating to the associated measure NO_X output. This information may be used by the APCO to determine compliance

when there is no continuous emission monitoring system for NO_X available or when the continuous emissions monitoring system is not operating properly. The permittee will be required, by permit condition, to submit information correlating the NO_X control system operating parameters to the associated measured NO_X output. Therefore, the proposed turbine will be operating in compliance with the control system operating parameter requirements of this rule. The following condition will ensure continued compliance with the requirements of this section:

- The owner or operator shall submit to the District, before issuance of the Permit to Operate, information correlating the NOx control system operating parameters to the associated measured NOx output. The information must be sufficient to allow the District to determine compliance with the NOx emission limits of this permit when no continuous emission monitoring data for NOx is available or when the continuous emission monitoring system is not operating properly. [District Rule 4703]

Section 6.2.6 requires the facility to maintain a stationary gas turbine system operating log that includes, on a daily basis, the actual local startup and stop time, length and reason for reduced load periods, total hours of operation, and the type and quantity of fuel used. The permittee will be required to maintain records of each item listed above. Therefore, the proposed turbine will be operating in compliance with the recordkeeping requirements of this rule. The following conditions will ensure continued compliance with the requirements of this section:

- The permittee shall maintain the following records: date and time, duration, and type of any startup, shutdown, or malfunction; performance testing; evaluations, calibrations, checks, adjustments, any period during which a continuous monitoring system or monitoring device was inoperative, and maintenance of any continuous emission monitor. [District Rules 1080, 2201, and 4703 and 40 CFR 60.8(d)]

- The permittee shall maintain the following records: quarterly hours of operation, fuel consumption (scf/hr and scf/rolling twelve month period), continuous emission monitor measurements, calculated ammonia slip, and calculated NOx mass emission rates (lb/hr and lb/twelve month rolling period). [District Rules 2201 and 4703]

Section 6.2.7 establishes recordkeeping requirements for units that are exempt pursuant to the requirements of Section 4.2. Each of the proposed turbines is subject to the requirements of this rule. Therefore, the requirements of this section are not applicable and no further discussion is required.

Section 6.2.8 requires owners or operators performing startups or shutdowns to keep records of the duration of each startup and shutdown. As discussed in the Section 6.2.6 discussion above for this rule, the permittee will be required, by permit condition, to maintain records of the date, time and duration or each startup and shutdown. Therefore, the proposed turbine will be operating in compliance with the recordkeeping requirements of this rule.

<u>Sections 6.3 and 6.4 - Compliance Testing</u>:

Section 6.3.1 states that the owner or operator of any stationary gas turbine system subject to the provisions of Section 5.0 of this rule shall provide source test information annually regarding the exhaust gas NO_X and CO concentrations. The proposed turbine is subject to the provisions of

Section 5.0 of this rule. Therefore, it will be required to test annually to demonstrate compliance with the exhaust gas NO_X and CO concentrations. The following condition will ensure continued compliance with the requirements of this section:

- Source testing to measure the NOx, CO, VOC, and NH3 emission rates (lb/hr and ppmvd @ 15% O2) and PM10 emission rate (lb/hr) shall be conducted within 120 days after initial operation and at least once every twelve months thereafter. [District Rules 1081 and 4703 and 40 CFR 60.4400(a)]

Section 6.3.2 specifies source testing requirements for units operating less than 877 hours per year. The proposed turbine will be allowed to operate up to 8,322 hours per year. Therefore, the requirements of this section are not applicable and no further discussion is required.

Section 6.3.3 specifies source testing requirements for units that are equipped with intermittently operated auxiliary burners. HECA is not proposing to operate the turbine with auxiliary burners. Therefore, the requirements of this section are not applicable and no further discussion is required.

Section 6.4 states that the facility must demonstrate compliance annually with the NO_X and CO emission limits using the following test methods, unless otherwise approved by the APCO and EPA:

- Oxides of nitrogen emissions for compliance tests shall be determined by using EPA Method 7E or EPA Method 20.
- Carbon monoxide emissions for compliance tests shall be determined by using EPA Test Methods 10 or 10B.
- Oxygen content of the exhaust gas shall be determined by using EPA Methods 3, 3A, or 20.
- HHV and LHV of gaseous fuels shall be determined by using ASTM D3588-91, ASTM 1826-88, or ASTM 1945-81.

The following conditions will ensure continued compliance with the test method requirements of this section:

- The following test methods shall be used: NOx - EPA Method 7E or 20, PM10 - EPA Method 5/202 (front half and back half), CO - EPA Method 10 or 10B, O2 - EPA Method 3, 3A, or 20, VOC - EPA Method 18 or 25, and ammonia – EPA Method 206. EPA approved alternative test methods as approved by the District may also be used to address the source testing requirements of this permit. The request to utilize EPA approved alternative source testing methods must be submitted in writing and written approval received from the District prior to the submission of the source test plan. [District Rules 1081 and 4703 and 40 CFR 60.4400(1)(i)]

- HHV and LHV of the fuel shall be determined using ASTM D3588, ASTM 1826, or ASTM 1945. [40 CFR 60.332(a),(b) and District Rule 4703, 6.4.5]

Conclusion:

Conditions will be incorporated into the CTG permit in order to ensure compliance with each applicable section of this rule. Therefore, compliance with the requirements of Rule 4703 is expected and no further discussion is required.

Rule 4801 - Sulfur Compounds

Per Section 3.1, a person shall not discharge into the atmosphere sulfur compounds, which would exist as a liquid or gas at standard conditions, exceeding in concentration at the point of discharge: 0.2% by volume calculated as SO_2 on a dry basis averaged over 15 consecutive minutes:

S-7616-9-0 (Combustion Turbine Generator)

The sulfur content of the natural gas fuel will be no greater than 0.75 gr/100 dscf (12 ppm-SOx or 0.0021 lb-SOx/MMBtu) and that of the hydrogen-rich fuel will be no greater than 5 ppm-SOx. Therefore, the following demonstration will be based on the sulfur content of the natural gas.

Using the ideal gas equation and the emission factors presented in Section VII, the sulfur compound emissions are calculated as follows:

Volume SO_2 = (n x R x T) / P

With:

N = moles SO_2
T (Standard Temperature) = 60°F = 520°R
P (Standard Pressure) = 14.7 psi
R (Universal Gas Constant) = $\frac{10.73\,\text{psi}\cdot\text{ft}^3}{\text{lb}\cdot\text{mol}\cdot°\text{R}}$

$$\frac{0.0021\,lb-SOx}{MMBtu}\times\frac{MMBtu}{8{,}578\,dscf}\times\frac{1\,lb\cdot mol}{64\,lb}\times\frac{10.73\,psi\cdot ft^3}{lb\cdot mol\cdot °R}\times\frac{520°R}{14.7\,psi}\times\frac{1{,}000{,}000\cdot parts}{million}=1.5\frac{parts}{million}$$

$SulfurConcentration = 1.5\frac{parts}{million}$ < 2,000 ppmv (or 0.2%)

Since 1.5 ppmv ≤ 2000 ppmv, the turbine is expected to comply with Rule 4801.

S-7616-14-0 through -16-0 (Emergency Engines)

Volume SO_2 = (n x R x T) / P

With:

N = moles SO_2
T (Standard Temperature) = 60°F = 520°R
P (Standard Pressure) = 14.7 psi
R (Universal Gas Constant) = $\frac{10.73\,\text{psi}\cdot\text{ft}^3}{\text{lb}\cdot\text{mol}\cdot{}^\circ\text{R}}$

$$\frac{0.000015\,lb-S}{lb-fuel}\times\frac{7.1\,\text{lb}}{\text{gal}}\times\frac{64\,\text{lb}-SO_2}{32\,\text{lb}-\text{S}}\times\frac{1\,\text{MMBtu}}{9{,}051\,\text{scf}}\times\frac{1\,\text{gal}}{0.137\,\text{MMBtu}}\times\frac{\text{lb}-\text{mol}}{64\,\text{lb}-SO_2}\times\frac{10.73\,\text{psi}-\text{ft}^3}{\text{lb}-\text{mol}-{}^\circ\text{R}}\times\frac{520^\circ\text{R}}{14.7\,\text{psi}}\times 1{,}000{,}000 = 1.0\ \text{ppmv}$$

Since 1.0 ppmv is ≤ 2,000 ppmv, this engine is expected to comply with Rule 4801. Therefore, the following condition will be listed on the permit to ensure compliance:

- {3395} Only CARB certified diesel fuel containing not more than 0.0015% sulfur by weight is to be used. [District Rules 2201 and 4801 and 17 CCR 93115]

S-7616-13-0 (Auxiliary Boiler)

Using the ideal gas equation and the emission factors presented in Section VII, the sulfur compound emissions are calculated as follows:

Volume SO_2 = (n x R x T) / P

With:

N = moles SO_2
T (Standard Temperature) = 60°F = 520°R
P (Standard Pressure) = 14.7 psi
R (Universal Gas Constant) = $\frac{10.73\,\text{psi}\cdot\text{ft}^3}{\text{lb}\cdot\text{mol}\cdot{}^\circ\text{R}}$

$$\frac{0.00285\,lb-SOx}{MMBtu}\times\frac{MMBtu}{8{,}578\,dscf}\times\frac{1\,lb\cdot mol}{64\,lb}\times\frac{10.73\,psi\cdot ft^3}{lb\cdot mol\cdot{}^\circ R}\times\frac{520^\circ R}{14.7\,psi}\times\frac{1{,}000{,}000\cdot parts}{million}=2.0\frac{parts}{million}$$

$SulfurConcentration = 2.0\frac{parts}{million}$ < 2,000 ppmv (or 0.2%)

Since 2.0 ppmv ≤ 2000 ppmv, the auxiliary boiler is expected to comply with Rule 4801. Therefore, compliance with District Rule 4801 requirements is expected.

Rule 7012 - Hexavalent Chromium – Cooling Towers

Since the proposed cooling towers will not and have never had hexavalent chromium containing compounds added, the cooling towers will be exempt from the provision of this rule except for the Sections 5.2.1, 6.1, and 7.1.

Section 5.2.1 requires that no hexavalent chromium compounds be added after 9/16/91 (intended to apply to cooling towers that previously used hexavalent chromium). A permit condition will be added to satisfy this requirement.

Section 6.1 requires that the owner/operator of a new cooling tower submit a compliance plan at least 90 days before it is operated containing business information, location of cooling tower, type and materials of construction, and a statement regarding the use or non use of hexavalent chromium. A permit condition will be added to satisfy this requirement.

The following conditions will be added to the permits:

- Permittee shall submit cooling tower design details including the cooling tower type, drift eliminator design details, and materials of construction to the District at least 90 days before the tower is operated. [District Rule 7012]

- No hexavalent chromium containing compounds shall be added to cooling tower circulating water. [District Rule 7012]

Section 7.1 requires that the permittee pay permit filing fees associated with the cooling tower as specified in Rule 3010 (Permit Fee). The applicant has already paid such fees. Therefore, compliance is expected.

Rule 8011 - General Requirements

The definitions, exemptions, requirements, administrative requirements, recordkeeping requirements, and test methods set forth in this rule are applicable to all rules under Regulation VIII (Fugitive PM10 Prohibitions) of the Rules and Regulations of the San Joaquin Valley Unified Air Pollution Control District.

Rule 8021 - Construction, Demolition, Excavation, Extraction and Other Earthmoving Activities

The purpose of this rule is to limit fugitive dust emissions from construction, demolition, excavation, and other earthmoving activities. It requires the use of control measures to maintain visible dust emissions (VDE) under the 20% opacity requirement.

The applicant will commit to the use of dust control measures (e.g., water, approved chemical stabilizers, etc.) during construction to maintain opacity to a level below 20% per Rule 8021 requirements. Compliance with the requirements of this rule is anticipated.

Proposed Rule 8021 Condition:

- Disturbances of soil related to any construction, demolition, excavation, extraction, or other earthmoving activities shall comply with the requirements for fugitive dust control in District Rule 8021 unless specifically exempted under Section 4.0 of Rule 8021 or Rule 8011. [District Rules 8011 and 8021]
- An owner/operator shall submit a Dust Control Plan to the APCO prior to the start of any construction activity on any site that will include 10 acres or more of disturbed surface area for residential developments, or 5 acres or more of disturbed surface area for non-residential development, or will include moving, depositing, or relocating more than 2,500 cubic yards per day of bulk materials on at least three days. [District Rules 8011 and 8021]
- An owner/operator shall prevent or cleanup any carryout or trackout in accordance with the requirements of District Rule 8041 Section 5.0, unless specifically exempted under Section 4.0 of Rule 8041 (8/19/04) or Rule 8011(8/19/04). [District Rules 8011 and 8021]

Rule 8031 - Bulk Materials

Pursuant to Section 2.0, this rule is applicable to the outdoor handling, storage, and transport of any bulk material. The following condition will be included on the permit to satisfy the requirements of the rule.

Proposed Rule 8031 Condition:

- Records and other supporting documentation shall be maintained as required to demonstrate compliance with the requirements of the rules under Regulation VIII only for those days that a control measure was implemented. Such records shall include the type of control measure(s) used, the location and extent of coverage, and the date, amount, and frequency of application of dust suppressant, manufacturer's dust suppressant product information sheet that identifies the name of the dust suppressant and application instructions. Records shall be kept for one year following project completion that results in the termination of all dust generating activities. [District Rules 8011, 8031, and 8071]

Rule 8051 - Open Areas

Pursuant to Section 2.0, this rule is applicable to any open area having 3.0 acres or more of disturbed surface area, that has remained undeveloped, unoccupied, unused or vacant for more than seven days. The following condition will be included on the permit to satisfy the requirements of the rule.

Proposed Rule 8051 Condition:

- Whenever open areas are disturbed, or vehicles are used in open areas, the facility shall comply with the requirements of Section 5.0 of District Rule 8051, unless specifically exempted under Section 4.0 of Rule 8051 or Rule 8011. [District Rules 8011 and 8051]

Rule 8061 - Paved and Unpaved Roads

Pursuant to Section 2.0, this rule applies to any new or existing public or private paved or unpaved road, road construction project, or road modification project. The following condition will be included on the permit to satisfy the requirements of the rule.

Proposed Rule 8061 Condition:

- Any paved road or unpaved road shall comply with the requirements of District Rule 8061 unless specifically exempted under Section 4.0 of Rule 8061 or Rule 8011. [District Rules 8011 and 8061]

Rule 8071 - Unpaved Vehicle/Equipment Traffic Areas

Pursuant to Section 2.0, this rule applies to any unpaved vehicle/equipment traffic area of 1.0 acre or larger. The following condition will be included on the permit to satisfy the requirements of the rule.

Proposed Rule 8071 Condition:

- Water, gravel, roadmix, or chemical/organic dust stabilizers/suppressants, vegetative materials, or other District-approved control measure shall be applied to unpaved vehicle travel areas as required to limit Visible Dust Emissions to 20% opacity and comply with the requirements for a stabilized unpaved road as defined in Section 3.59 of District Rule 8011. [District Rule 8011 and 8071]

- Where dusting materials are allowed to accumulate on paved surfaces, the accumulation shall be removed daily or water and/or chemical/organic dust stabilizers/suppressants shall be applied to the paved surface as required to maintain continuous compliance with the requirements for a stabilized unpaved road as defined in Section 3.59 of District Rule 8011 and limit Visible Dust Emissions (VDE) to 20% opacity. [District Rule 8011 and 8071]

- On each day that 50 or more Vehicle Daily Trips or 25 or more Vehicle Daily Trips with 3 axles or more will occur on an unpaved vehicle/equipment traffic area, permittee shall apply water, gravel, roadmix, or chemical/organic dust stabilizers/suppressants, vegetative materials, or other District-approved control measure as required to limit Visible Dust Emissions to 20% opacity and comply with the requirements for a stabilized unpaved road as defined in Section 3.59 of District Rule 8011. [District Rule 8011 and 8071]

- Whenever any portion of the site becomes inactive, Permittee shall restrict access and periodically stabilize any disturbed surface to comply with the conditions for a stabilized surface as defined in Section 3.58 of District Rule 8011. [District Rules 8011 and 8071]

Title 13 California Code of Regulations (CCR), Section 2423 – Exhaust Emission Standards and Test Procedures, Off-Road Compression-Ignition Engines and Equipment (Required by Title 17 CCR, Section 93115 for New Emergency Diesel IC Engines)

S-7616-16-0 (Emergency IC Engine)

Title 13 CCR, Section 2423 lists a diesel particulate emission standard of 0.01 g/bhp-hr, equivalent to 0.02 g/kW-hr) for 2011 through 2013 model year engines with maximum power ratings of 301.7 – 603.4 bhp (equivalent to 225 - 450 kW). The engine involved with this project will be at least a certified 2011 model engine. Therefore, the proposed 556 bhp Cummins QSB4.5 Series emergency diesel IC engine (or approved equivalent) will have to meet the interim Tier 4 emission standards specified in the Off-Road Compression Ignition Engine Standards for off-road engines on the applicable dates specified. The following table compares the requirements of Title 13 CCR, Section 2423 to the emissions factors for the proposed engine

Requirements of Title 13 CCR, Section 2423							
Source	Maximum Rated Power	Model Year	NO_X	VOC	NO_X + VOC	CO	PM
Title 13 CCR, §2423	301.7 – 603.4 bhp (225 - 450 kW)	2006-2010 (Tier 3)	--	--	3.0 g/bhp-hr (4.0 g/kW-hr)	2.6 g/bhp-hr (3.5 g/kW-hr)	0.15 g/bhp-hr (0.20 g/kW-hr)
Title 13 CCR, §2423	301.7 – 603.4 bhp (225 - 450 kW)	2011-2013 (Interim Tier 4)	1.5 g/bhp-hr (2.0 g/kW-hr)	0.14 g/bhp-hr (0.19 g/kW-hr)	--	2.6 g/bhp-hr (3.5 g/kW-hr)	0.01 g/bhp-hr (0.02 g/kW-hr)

As presented in the table above, the proposed engine will be required to be the latest Tier level required at the time of installation in compliance with the requirements of this section.

Therefore, the following conditions (previously proposed in this engineering evaluation) will be listed on the ATC to ensure compliance:

- {edited 3485} Emissions from this IC engine shall not exceed any of the following limits: 1.5 g-NOx/bhp-hr, 2.6 g-CO/bhp-hr, or 0.14 g-VOC/bhp-hr. [District Rule 2201 and 13 CCR 2423 and 17 CCR 93115]

- {edited 3486} Emissions from this IC engine shall not exceed 0.01 g-PM10/bhp-hr based on USEPA certification using ISO 8178 test procedure. [District Rules 2201 and 4102 and 13 CCR 2423 and 17 CCR 93115]

S-7616-14-0 and -15-0 (Emergency IC Engines)

Title 13 CCR, Section 2423 lists a diesel particulate emission standard of 0.07 g/bhp-hr, equivalent to 0.10 g/kW-hr) for 2011 through 2014 model year engines with maximum power rating greater than 1207 bhp. The engines involved with this project will be at least a certified 2011 model engine. Therefore, the two proposed 2,922 bhp Cummins QSK60-G6 emergency diesel IC engine (or approved equivalent) will have to meet the interim Tier 4

emission standards specified in the Off-Road Compression Ignition Engine Standards for off-road engines on the applicable dates specified. The following table compares the requirements of Title 13 CCR, Section 2423 to the emissions factors for the proposed engine

Requirements of Title 13 CCR, Section 2423							
Source	Maximum Rated Power	Model Year	NO_X	VOC	NO_X + VOC	CO	PM
Title 13 CCR, §2423	≥ 751.0 bhp (≥ 560 kW)	2006-2010 (Tier 3)	--	--	4.8 g/bhp-hr (6.4 g/kW-hr)	2.6 g/bhp-hr (3.5 g/kW-hr)	0.15 g/bhp-hr (0.20 g/kW-hr)
Title 13 CCR, §2423	≥ 751.0 bhp (≥ 560 kW)	2006 and later (Tier 2)	0.5 g/bhp-hr (0.67 g/kW-hr)	0.3 g/bhp-hr (0.40 g/kW-hr)	--	2.6 g/bhp-hr (3.5 g/kW-hr)	0.07 g/bhp-hr (0.10 g/kW-hr)

As presented in the table above, the proposed engines will be required to be the latest Tier level required at the time of installation in compliance with the requirements of this section.

Therefore, the following conditions (previously proposed in this engineering evaluation) will be listed on the ATC to ensure compliance:

- {edited 3485} Emissions from this IC engine shall not exceed any of the following limits: 0.5 g-NOx/bhp-hr, 2.6 g-CO/bhp-hr, or 0.3 g-VOC/bhp-hr. [District Rule 2201 and 13 CCR 2423 and 17 CCR 93115]

- {edited 3486} Emissions from this IC engine shall not exceed 0.07 g-PM10/bhp-hr based on USEPA certification using ISO 8178 test procedure. [District Rules 2201 and 4102 and 13 CCR 2423 and 17 CCR 93115]

<u>Right of the District to Establish More Stringent Standards</u>:

This regulation also stipulates that the District:

1. May establish more stringent diesel PM, NO_X + VOC, VOC, NO_X, and CO emission rate standards; and
2. May establish more stringent limits on hours of maintenance and testing on a site-specific basis; and
3. Shall determine an appropriate limit on the number of hours of operation for demonstrating compliance with other District rules and initial start-up testing

The District has not established more stringent standards at this time. Therefore, the standards previously established in this Section will be utilized.

Title 17 California Code of Regulations (CCR), Section 93115 - Airborne Toxic Control Measure (ATCM) for Stationary Compression-Ignition (CI) Engines

Emergency Operating Requirements:

This regulation stipulates that no owner or operator shall operate any new or in-use stationary diesel-fueled compression ignition (CI) emergency standby engine, in response to the notification of an impending rotating outage, unless specific criteria are met.

This section applies to emergency standby IC engines that are permitted to operate during non-emergency conditions for the purpose of providing electrical power. However, District Rule 4702 states that emergency standby IC engines may only be operated during non-emergency conditions for the purposes of maintenance and testing. Therefore, this section does not apply and no further discussion is required.

Fuel and Fuel Additive Requirements:

This regulation also stipulates that as of January 1, 2006 an owner or operator of a new or in-use stationary diesel-fueled CI emergency standby engine shall fuel the engine with CARB Diesel Fuel.

Since the engines involved with this project are new stationary diesel-fueled CI emergency standby engine, these fuel requirements are applicable. Therefore, the following condition (previously proposed in this engineering evaluation) will be listed on the ATC to ensure compliance:

- {3395} Only CARB certified diesel fuel containing not more than 0.0015% sulfur by weight is to be used. [District Rules 2201 and 4801 and 17 CCR 93115]

At-School and Near-School Provisions:

This regulation stipulates that no owner or operator shall operate a new stationary emergency standby diesel-fueled CI engine, with a PM_{10} emissions factor > than 0.01 g/bhp-hr, for non-emergency use, including maintenance and testing, during the following periods:

1. Whenever there is a school sponsored activity, if the engine is located on school grounds, and
2. Between 7:30 a.m. and 3:30 p.m. on days when school is in session, if the engine is located within 500 feet of school grounds.

The District has verified that the engine is not located within 500 feet of a K-12 school. Therefore, conditions prohibiting non-emergency usage of the engine during school hours will not be placed on the permit.

Recordkeeping Requirements:

This regulation stipulates that as of January 1, 2005, each owner or operator of an emergency standby diesel-fueled CI engine shall keep a monthly log of usage that shall list and document the nature of use for each of the following:

a. Emergency use hours of operation;
b. Maintenance and testing hours of operation;
c. Hours of operation for emission testing;
d. Initial start-up hours; and
e. If applicable, hours of operation to comply with the testing requirements of National Fire Protection Association (NFPA) 25 — "Standard for the Inspection, Testing, and Maintenance of Water-Based Fire Protection Systems," 1998 edition;
f. Hours of operation for all uses other than those specified in sections 'a' through 'd' above; and
g. For in-use emergency standby diesel-fueled engines, the fuel used. The owner or operator shall document fuel use through the retention of fuel purchase records that account for all fuel used in the engine and all fuel purchased for use in the engine, and, at a minimum, contain the following information for each individual fuel purchase transaction:

    I. Identification of the fuel purchased as either CARB Diesel, or an alternative diesel fuel that meets the requirements of the Verification Procedure, or an alternative fuel, or CARB Diesel fuel used with additives that meet the requirements of the Verification Procedure, or any combination of the above;
    II. Amount of fuel purchased;
    III. Date when the fuel was purchased;
    IV. Signature of owner or operator or representative of owner or operator who received the fuel; and
    V. Signature of fuel provider indicating fuel was delivered.

The engines associated with this project are new emergency standby engines, two of which will power electrical generators and one will power a firewater pump. Therefore, the following conditions (previously proposed in this engineering evaluation) will be listed on the ATC to ensure compliance:

- {3479} The permittee shall maintain monthly records of emergency and non-emergency operation. Records shall include the number of hours of emergency operation, the date and number of hours of all testing and maintenance operations, the purpose of the operation (for example: load testing, weekly testing, rolling blackout, general area power outage, etc.) and records of operational characteristics monitoring. For units with automated testing systems, the operator may, as an alternative to keeping records of actual operation for testing purposes, maintain a readily accessible written record of the automated testing schedule. [District Rule 4702 and 17 CCR 93115]

- {3475} All records shall be maintained and retained on-site for a minimum of five (5) years, and shall be made available for District inspection upon request. [District Rule 4702 and 17 CCR 93115]

PM Emissions and Hours of Operation Requirements for New Diesel Engines (S-7616-14-0 and -15-0:

This regulation stipulates that as of January 1, 2005, no person shall operate any new stationary emergency standby diesel-fueled CI engine that has a rated brake horsepower greater than 50, unless it meets all of the following applicable emission standards and operating requirements.

1. Emits diesel PM at a rate greater than 0.01 g/bhp-hr or less than or equal to 0.15 g/bhp-hr; or
2. Meets the current model year diesel PM standard specified in the Off-Road Compression Ignition Engine Standards for off-road engines with the same maximum rated power (Title 13 CCR, Section 2423), whichever is more stringent; and
3. Does not operate more than 50 hours per year for maintenance and testing purposes. Engine operation is not limited during emergency use and during emissions source testing to show compliance with the ATCM.

Therefore, the following conditions (previously proposed in this engineering evaluation) will be listed on the ATC to ensure compliance:

- {edited 3486} Emissions from this IC engine shall not exceed 0.07 g-PM10/bhp-hr based on USEPA certification using ISO 8178 test procedure. [District Rules 2201 and 4102 and 13 CCR 2423 and 17 CCR 93115]

- {3810} This engine shall be operated only for testing and maintenance of the engine, required regulatory purposes, and during emergency situations. Operation of the engine for maintenance, testing, and required regulatory purposes shall not exceed 50 hours per calendar year. [District Rule 4702 and 17 CCR 93115]

PM Emissions and Hours of Operation Requirements for New Diesel Engines (S-7616-16-0):

This regulation stipulates that as of January 1, 2005, no person shall operate any new stationary emergency standby diesel-fueled CI engine that has a rated brake horsepower greater than 50 unless it meets all of the following applicable emission standards and operating requirements.

1. Emits diesel PM at a rate less than or equal to 0.01 g/bhp-hr; or
2. Meets the current model year diesel PM standard specified in the Off-Road Compression Ignition Engine Standards for off-road engines with the same maximum rated power (Title 13 CCR, Section 2423), whichever is more stringent; and
3. Does not operate more than 51 to 100 hours per year (upon approval by the District) for maintenance and testing purposes. Engine operation is not limited during emergency use and during emissions source testing to show compliance with the ATCM.

Therefore, the following conditions (previously proposed in this engineering evaluation) will be listed on the ATC to ensure compliance:

- {edited 3486} Emissions from this IC engine shall not exceed 0.01 g-PM10/bhp-hr based on USEPA certification using ISO 8178 test procedure. [District Rules 2201 and 4102 and 13 CCR 2423 and 17 CCR 93115]

- {3809} This engine shall be operated only for testing and maintenance of the engine, required regulatory purposes, and during emergency situations. Operation of the engine for maintenance, testing, and required regulatory purposes shall not exceed 100 hours per calendar year. [District Rule 4702 and 17 CCR 93115]

California Environmental Quality Act (CEQA)

It has been determined that the project has the potential to adversely affect the environment and therefore subject to requirements of the California Environmental Quality Act (CEQA). The California Energy Commission (CEC) is the lead agency for CEQA. Upon satisfaction of the CEQA requirements for this project, the CEC will issue a Certification to HECA approving construction and operation of the power plant. The District's FDOC conditions will be incorporated into the CEC's Certification for this power plant project. Therefore, CEQA requirements will be satisfied prior to approval of construction.

California Health & Safety Code 42301.6 (School Notice)

The District has verified that this site is not located within 1,000 feet of a school. Therefore, the public notification requirement of California Health and Safety Code 42301.6 is not applicable to this project

California Health & Safety Code, Section 44300 (Air Toxic "Hot Spots")

Section 44300 of the California Health and Safety Code requires submittal of an air toxics "Hot Spot" information and assessment report for sources with criteria pollutant emissions greater than 10 tons per year. However, Section 44344.5 (b) states that a new facility shall not be required to submit such a report if all of the following conditions are met:

1. The facility is subject to a district permit program established pursuant to Section 42300.

2. The district conducts an assessment of the potential emissions or their associated risks, and finds that the emissions will not result in a significant risk.

3. The district issues a permit authorizing construction or operation of the new facility.

A health risk screening assessment was performed for the proposed project. The acute and chronic hazard indices are less than 1.0 and the cancer risk is less than ten (10) in a million, which are the thresholds of significance for toxic air contaminants. This project qualifies for exemption per the above exemption criteria.

IX. Recommendation

Compliance with all applicable prohibitory rules and regulations is expected. Pending a successful NSR Public Noticing period, issue the Final Determination of Compliance for the facility subject to the conditions presented in Appendix A.

X. Billing Information

Annual Permit Fees			
Permit Number	Fee Schedule	Fee Description	Annual Fee
S-7616-1-0	3020-01-H	5,600 hp electric motor hp	$1,030
S-7616-2-0	3020-02-H	54 MMBtu/hr	$1,030
S-7616-3-0	3020-02-H	1,695 MMBtu/hr	$1,030
S-7616-4-0	3020-01-G	1300 hp electric motor hp	$815
S-7616-5-0	3020-02-G	10 MMBtu/hr	$815
S-7616-6-0	3020-02-H	36 MMBtu/hr	$1,030
S-7616-7-0	3020-02-H	150 MMBtu/hr	$1,030
S-7616-8-0	3020-06	Miscellaneous	$105
S-7616-9-0	3020-08B-I	349 MW	$22,417
S-7616-11-0	3020-01-F	400 hp electric motor hp	$607
S-7616-12-0	999-999	Electrical Generation Component	$0
S-7616-13-0	3020-02-H	142 MMBtu/hr	$1,030
S-7616-14-0	3020-10-F	2,922 bhp	$749
S-7616-15-0	3020-10-F	2,922 bhp	$749
S-7616-16-0	3020-10-D	556 bhp	$479

APPENDIX A
Determination of Compliance Conditions

San Joaquin Valley
Air Pollution Control District

AUTHORITY TO CONSTRUCT

PERMIT NO: S-7616-1-0

ISSUANCE DATE: DRAFT

LEGAL OWNER OR OPERATOR: HYDROGEN ENERGY CALIFORNIA, LLC
MAILING ADDRESS: ONE WORLD TRADE CENTER
SUITE 1600
LONG BEACH, CA 90831-1600

LOCATION: SEC 10 T30S R 24E
TUPMAN, CA

EQUIPMENT DESCRIPTION:
FEEDSTOCK HANDLING AND STORAGE SYSTEM, INCLUDING A SERIES OF ENCLOSED CONVEYERS, WITH TRUCK UNLOADING BUILDING, FEEDSTOCK STORAGE SILOS, CRUSHER, COAL/COKE FEED BIN, GRINDING MILL, SLURRY PREPARATION SYSTEM, SERVED BY DUST COLLECTION SYSTEM CONSISTING OF HOODS AND DUST COLLECTORS

CONDITIONS

1. The permittee shall enter into an Air Quality Mitigation Settlement Agreement with the District prior to issuance of the Final Determination of Compliance, or such other time that is mutually agreeable.
2. Prior to initial operation of S-7616-1 through -7 and -9 through -13, permittee shall provide PM10 emission reduction credits for the following quantity of emissions: 1st quarter: 48,489 lb, 2nd quarter: 48,489 lb, 3rd quarter: 48,489 lb, and 4th quarter: 48,489 lb. Offsets shall be provided at the applicable offset ratio specified in Table 4-2 of Rule 2201 (as amended 9/21/06). SOx ERCs may be used to offset PM10 increases at an interpollutant ratio of 1.0 lb-SOx: 1.0 lb-PM10. [District Rule 2201]
3. ERC certificate numbers C-1058-2, C-1058-5, C-1059-2, S-3275-5, S-3273-2, S-3305-1, and/or S-3306-1 (or a certificate split from these certificates) shall be used to supply the required offsets, unless a revised offsetting proposal is received and approved by the District, upon which this Authority to Construct shall be reissued, administratively specifying the new offsetting proposal. Original public noticing requirements, if any, shall be duplicated prior to reissuance of this Demonstration of Compliance. [District Rule 2201]
4. Permittee shall submit an application to comply with Rule 2520 - Federally Mandated Operating Permits within twelve months of commencing operation. [District Rule 2520]

CONDITIONS CONTINUE ON NEXT PAGE

YOU MUST NOTIFY THE DISTRICT COMPLIANCE DIVISION AT (661) 392-5500 WHEN CONSTRUCTION IS COMPLETED AND PRIOR TO OPERATING THE EQUIPMENT OR MODIFICATIONS AUTHORIZED BY THIS AUTHORITY TO CONSTRUCT. This is NOT a PERMIT TO OPERATE. Approval or denial of a PERMIT TO OPERATE will be made after an inspection to verify that the equipment has been constructed in accordance with the approved plans, specifications and conditions of this Authority to Construct, and to determine if the equipment can be operated in compliance with all Rules and Regulations of the San Joaquin Valley Unified Air Pollution Control District. Unless construction has commenced pursuant to Rule 2050, this Authority to Construct shall expire and application shall be cancelled two years from the date of issuance. The applicant is responsible for complying with all laws, ordinances and regulations of all other governmental agencies which may pertain to the above equipment.

Seyed Sadredin, Executive Director/APCO

DRAFT

DAVID WARNER, Director of Permit Services
S-7616-1-0 : Jun 16 2010 2:07PM – RAMIREZH : Joint Inspection NOT Required

5. Permittee shall submit an application to comply with Rule 2540 - Acid Rain Program within twelve months of commencing operation. [District Rule 2540]
6. {98} No air contaminant shall be released into the atmosphere which causes a public nuisance. [District Rule 4102]
7. Petroleum coke unloading hopper shall be equipped with water/additive misting system, which shall be employed as needed to control dust emissions during unloading. [District Rule 2201]
8. Operation shall include the following dust collectors serving the following operations: truck unloading (DC-1); coke/coal silos filling (DC-2); mass flow bins (DC-3); coke/coals silos loadout (DC-4); crusher inlet/outlet (DC-5); fluxant bins filling (DC-6). [District Rule 2201]
9. Truck receiving operation shall be fully enclosed when trucks are in unloading position and spray nozzles shall be automatically activated at or prior to unloading as necessary to prevent visible emissions. [District Rule 2201]
10. All conveyors and crushers shall be fully enclosed and shall vent only to dust collectors. [District Rule 2201]
11. All storage silos shall be dust-tight (no visible emissions in excess of 0% opacity) and shall vent only to dust collectors. [District Rules 2201, 4001, and 40 CFR 60.254]
12. Each dust collector shall be equipped with dust-tight (no visible emissions in excess of 0% opacity) provisions to return collected material to process equipment. [District Rules 2201, 4001, and 40 CFR 60.254]
13. Each dust collector shall be equipped with operational differential pressure indicators, and during fabric collector operation read in the proper range specified by the manufacturer. [District Rule 2201]
14. The differential pressure across each compartment of the dust collectors shall be checked and the results recorded quarterly. If the differential pressure across each compartment of the dust collectors is not within the proper range specified by the manufacturer, corrective action is required prior to further operation of the equipment. Corrective action means that the cause of the improper pressure differential is corrected before operation of the equipment is resumed. [District Rule 2201]
15. Each dust collector shall automatically activate whenever process equipment served is activated. [District Rule 2201]
16. Enclosure dust suppression system water spray nozzles shall automatically operate when truck unloading is occurring. [District Rule 2201]
17. Material shall not be conveyed or crushed unless ventilation system and dust collector are operating and functioning properly. [District Rule 2201]
18. Permittee shall maintain daily records of the hours of operation of material unloading at the enclosed truck receiving hoppers and records shall be made available for District inspection upon request. [District Rule 2201]
19. PM-10 emissions shall not exceed any of the following emissions for the following operations: truck unloading: 6.7 lb/day; coke/coal silos filling: 16.8 lb/day; mass flow bins: 7.8 lb/day; coke/coals silos loadout: 5.0 lb/day; crusher inlet/outlet: 4.8 lb/day; fluxant bins filling: 1.3 lb/day. [District Rule 2201]
20. PM-10 emissions shall not exceed any of the following emissions for the following operations: truck unloading: 470 lb/yr; coke/coal silos filling: 1,190 lb/yr; mass flow bins: 2,524 lb/yr; coke/coal silos loadout: 1,614 lb/yr; crusher inlet/outlet: 1,548 lb/yr; fluxant bins filling: 70 lb/yr. [District Rule 2201]
21. The maximum process rates of material on a weight basis shall not exceed any of the following: truck unloading: 18,600 ton/day; coke/coal silos filling: 18,600 ton/day; mass flow bins: 4,080 ton/day; coke/coal silos loadout: 4,080 ton/day; crusher inlet/outlet: 4,080 ton/day; fluxant bins filling: 960 ton/day. [District Rule 2201]
22. The maximum process rates of material on a weight basis shall not exceed any of the following: truck unloading: 1,314,000 ton/yr; coke/coal silos filling: 1,314,000 ton/yr; mass flow bins: 1,314,000 ton/yr; coke/coals silo loadout: 1,314,000 ton/yr; crusher inlet/outlet: 1,314,000 ton/yr; fluxant bins filling: 52,560 ton/yr. [District Rule 2201]
23. Dust collector filters shall be completely inspected annually while not in operation for tears, scuffs, abrasives or holes which might interfere with PM collection efficiency and shall be replaced as needed. [District Rule 2201]
24. Visible emissions from the operation shall be checked and record results quarterly. If visible emissions are observed, corrective action is required prior to further loading. Corrective action means that visible emissions are eliminated before next loading event. [District Rule 2201]

DRAFT

CONDITIONS CONTINUE ON NEXT PAGE

25. Records of dust collector filter maintenance, inspection, and repairs shall be maintained. The records shall include identification of equipment, date of inspection, corrective action taken, and identification of individual performing inspection. [District Rule 2201]

26. Particulate matter emissions shall not exceed 0.005 grains/dscf in concentration from this operation. [District Rules 2201, 4001, and 40 CFR 60.254]

27. Testing for particulate matter concentration for each dust collector shall be conducted within 60 days after achieving the maximum production rate, not later than 180 days after initial startup of such facility, and within 12 calendar months of the date the previous performance test was required to be completed thereafter. If the results of the most recent performance test demonstrate that emissions from the affected facility are 50 percent or less of the applicable emissions standard, a new performance test must be conducted within 24 calendar months of the date that the previous performance test was required to be completed. [District Rule 4001 and 40 CFR 60.255(1), 40 CFR 60.8]

28. Testing for compliance with particulate matter concentration limit shall be conducted using EPA method 5. The sampling time and sample volume for each run shall be at least 60 minutes and 0.85 dscm (30 dscf). Sampling shall begin no less than 30 minutes after startup and shall terminate before shutdown procedures begin. A minimum of three valid test runs are needed to comprise a PM performance test. [District Rule 4001 and 40 CFR 60.255(1) and 60.257(5)(i)]

29. Testing for the opacity standards for the operations shall be conducted within 60 days after achieving the maximum production rate, not later than 180 days after initial startup of such facility, and within 90 operating days of the date the previous performance test was required to be completed thereafter. If all 6-minute average opacity readings in the most recent performance test are equal to or less than half the applicable opacity limit, a new performance test must be conducted within 12 calendar months of the date that the previous performance test was required to be completed. [District Rule 4001 and 40 CFR 60.255(2), 40 CFR 60.8]

30. Source testing to determine opacity as required by 40 CFR Part 60, Subpart Y shall be conducted using EPA method 9. [District Rule 4001 and 40 CFR 60.257(a)]

31. The permittee shall conduct monthly visual observations of all process and control equipment. If any deficiencies are observed, the necessary maintenance must be performed as expeditiously as possible. [District Rule 4001 and 40 CFR 60.257]

32. Permittee shall maintain a logbook (written or electronic) with the records specified in 40 CFR Subpart 60.258(a) on-site and make it available upon request. [District Rule 4001 and 40 CFR 60.258]

33. Permittee shall conduct testing for compliance with the particulate matter concentration limit and particulate matter concentration limit within 60 days after achieving the maximum production rate, not later than 180 days after initial startup of such facility. [District Rule 4001 and 40 CFR 60.258(c), 40 CFR 60.8]

34. Permittee shall provide the District at least 30 days prior notice of any performance test, except as specified under other subparts, to afford the Administrator the opportunity to have an observer present.. [District Rule 4001 and 40 CFR 60.8]

35. {3433} Disturbances of soil related to any construction, demolition, excavation, extraction, or other earthmoving activities shall comply with the requirements for fugitive dust control in District Rule 8021 unless specifically exempted under Section 4.0 of Rule 8021 or Rule 8011. [District Rules 8011 and 8021]

36. {3434} An owner/operator shall submit a Dust Control Plan to the APCO prior to the start of any construction activity on any site that will include 10 acres or more of disturbed surface area for residential developments, or 5 acres or more of disturbed surface area for non-residential development, or will include moving, depositing, or relocating more than 2,500 cubic yards per day of bulk materials on at least three days. [District Rules 8011 and 8021]

37. {3435} An owner/operator shall prevent or cleanup any carryout or trackout in accordance with the requirements of District Rule 8041 Section 5.0, unless specifically exempted under Section 4.0 of Rule 8041 (8/19/04) or Rule 8011(8/19/04). [District Rules 8011 and 8021]

38. {3436} Whenever open areas are disturbed, or vehicles are used in open areas, the facility shall comply with the requirements of Section 5.0 of District Rule 8051, unless specifically exempted under Section 4.0 of Rule 8051 or Rule 8011. [District Rules 8011 and 8051]

DRAFT

CONDITIONS CONTINUE ON NEXT PAGE

39. {3437} Any paved road or unpaved road shall comply with the requirements of District Rule 8061 unless specifically exempted under Section 4.0 of Rule 8061 or Rule 8011. [District Rules 8011 and 8061]

40. {3438} Water, gravel, roadmix, or chemical/organic dust stabilizers/suppressants, vegetative materials, or other District-approved control measure shall be applied to unpaved vehicle travel areas as required to limit Visible Dust Emissions to 20% opacity and comply with the requirements for a stabilized unpaved road as defined in Section 3.59 of District Rule 8011. [District Rule 8011 and 8071]

41. {3439} Where dusting materials are allowed to accumulate on paved surfaces, the accumulation shall be removed daily or water and/or chemical/organic dust stabilizers/suppressants shall be applied to the paved surface as required to maintain continuous compliance with the requirements for a stabilized unpaved road as defined in Section 3.59 of District Rule 8011 and limit Visible Dust Emissions (VDE) to 20% opacity. [District Rule 8011 and 8071]

42. {3440} On each day that 50 or more Vehicle Daily Trips or 25 or more Vehicle Daily Trips with 3 axles or more will occur on an unpaved vehicle/equipment traffic area, permittee shall apply water, gravel, roadmix, or chemical/organic dust stabilizers/suppressants, vegetative materials, or other District-approved control measure as required to limit Visible Dust Emissions to 20% opacity and comply with the requirements for a stabilized unpaved road as defined in Section 3.59 of District Rule 8011. [District Rule 8011 and 8071]

43. {3441} Whenever any portion of the site becomes inactive, Permittee shall restrict access and periodically stabilize any disturbed surface to comply with the conditions for a stabilized surface as defined in Section 3.58 of District Rule 8011. [District Rules 8011 and 8071]

44. {3442} Records and other supporting documentation shall be maintained as required to demonstrate compliance with the requirements of the rules under Regulation VIII only for those days that a control measure was implemented. Such records shall include the type of control measure(s) used, the location and extent of coverage, and the date, amount, and frequency of application of dust suppressant, manufacturer's dust suppressant product information sheet that identifies the name of the dust suppressant and application instructions. Records shall be kept for one year following project completion that results in the termination of all dust generating activities. [District Rules 8011, 8031, and 8071]

DRAFT

San Joaquin Valley
Air Pollution Control District

AUTHORITY TO CONSTRUCT

DRAFT

PERMIT NO: S-7616-2-0

ISSUANCE DATE: DRAFT

LEGAL OWNER OR OPERATOR: HYDROGEN ENERGY CALIFORNIA, LLC
MAILING ADDRESS: ONE WORLD TRADE CENTER
SUITE 1600
LONG BEACH, CA 90831-1600

LOCATION: SEC 10 T30S R 24E
TUPMAN, CA

EQUIPMENT DESCRIPTION:
GASIFICATION SYSTEM INCLUDING THREE GE QUENCH GASIFIERS (TWO MAIN AND ONE SPARE) SERVED BY THREE 18 MMBTU/HR NATURAL GAS-FIRED REFRACTORY HEATERS; SYNGAS SCRUBBING SYSTEM; SOUR SHIFT/LOW TEMPERATURE GAS COOLING (LTGC) SYSTEM; AND A RECTISOL ACID GAS REMOVAL (AGR) UNIT

CONDITIONS

1. The permittee shall enter into an Air Quality Mitigation Settlement Agreement with the District prior to issuance of the Final Determination of Compliance, or such other time that is mutually agreeable.
2. Prior to initial operation of S-7616-2, -3, -5, -6, -7, -9, and -13, permittee shall provide NOx emission reduction credits for the following quantity of emissions: 1st quarter: 92,319 lb, 2nd quarter: 92,319 lb, 3rd quarter: 92,319 lb, and 4th quarter: 92,319 lb. Offsets shall be provided at the applicable offset ratio specified in Table 4-2 of Rule 2201 (as amended 9/21/06). [District Rule 2201]
3. Prior to initial operation of S-7616-1 through -7 and -9 through -13, permittee shall provide PM10 emission reduction credits for the following quantity of emissions: 1st quarter: 48,489 lb, 2nd quarter: 48,489 lb, 3rd quarter: 48,489 lb, and 4th quarter: 48,489 lb. Offsets shall be provided at the applicable offset ratio specified in Table 4-2 of Rule 2201 (as amended 9/21/06). SOx ERCs may be used to offset PM10 increases at an interpollutant ratio of 1.0 lb-SOx: 1.0 lb-PM10. [District Rule 2201]
4. Prior to initial operation of S-7616-2, -3, -5, -6, -7, -9, and -13, permittee shall provide SOx emission reduction credits for the following quantity of emissions: 1st quarter: 5,315 lb, 2nd quarter: 5,315 lb, 3rd quarter: 5,315 lb, and 4th quarter: 5,315 lb. Offsets shall be provided at the applicable offset ratio specified in Table 4-2 of Rule 2201 (as amended 9/21/06). [District Rule 2201]

CONDITIONS CONTINUE ON NEXT PAGE

YOU MUST NOTIFY THE DISTRICT COMPLIANCE DIVISION AT (661) 392-5500 WHEN CONSTRUCTION IS COMPLETED AND PRIOR TO OPERATING THE EQUIPMENT OR MODIFICATIONS AUTHORIZED BY THIS AUTHORITY TO CONSTRUCT. This is NOT a PERMIT TO OPERATE. Approval or denial of a PERMIT TO OPERATE will be made after an inspection to verify that the equipment has been constructed in accordance with the approved plans, specifications and conditions of this Authority to Construct, and to determine if the equipment can be operated in compliance with all Rules and Regulations of the San Joaquin Valley Unified Air Pollution Control District. Unless construction has commenced pursuant to Rule 2050, this Authority to Construct shall expire and application shall be cancelled two years from the date of issuance. The applicant is responsible for complying with all laws, ordinances and regulations of all other governmental agencies which may pertain to the above equipment.

Seyed Sadredin, Executive Director / APCO

DRAFT

DAVID WARNER, Director of Permit Services
S-7616-2-0 : Jun 16 2010 2:07PM -- RAMIREZH : Joint Inspection NOT Required

5. Prior to initial operation of S-7616-2, -3, -5 through -9, and -13, permittee shall provide VOC emission reduction credits for the following quantity of emissions: 1st quarter: 31,817 lb, 2nd quarter: 31,817 lb, 3rd quarter: 31,817 lb, and 4th quarter: 31,817 lb. Offsets shall be provided at the applicable offset ratio specified in Table 4-2 of Rule 2201 (as amended 9/21/06). [District Rule 2201]

6. ERC certificate numbers C-1058-2, C-1058-5, C-1059-2, S-3275-5, S-3273-2, S-3305-1, and/or S-3306-1 (or a certificate split from these certificates) shall be used to supply the required offsets, unless a revised offsetting proposal is received and approved by the District, upon which this Authority to Construct shall be reissued, administratively specifying the new offsetting proposal. Original public noticing requirements, if any, shall be duplicated prior to reissuance of this Demonstration of Compliance. [District Rule 2201]

7. Permittee shall submit an application to comply with Rule 2520 - Federally Mandated Operating Permits within twelve months of commencing operation. [District Rule 2520]

8. Permittee shall submit an application to comply with Rule 2540 - Acid Rain Program within twelve months of commencing operation. [District Rule 2540]

9. {98} No air contaminant shall be released into the atmosphere which causes a public nuisance. [District Rule 4102]

10. Gasifiers shall be fired solely on PUC-quality natural gas. [District Rule 2201]

11. The total combined hours of operation of the three refractory heaters shall not exceed 3,600 hours per calendar year. [District Rule 2201]

12. No more than two refractory heaters shall be in operation at any one time. [District Rule 2201]

13. Emissions from refractory heaters shall not exceed any of the following emission rates: NOx (as NO2): 0.24 lb/MMBtu; SOx: 0.0021 lb/MMBtu; PM10: 0.0076 lb/MMBtu; CO:0.035 lb/MMBtu; VOC: 0.068 lb/MMBtu. [District Rule 2201]

14. Compliance testing for the first gasifier preheater tested shall consist of three (3) one-hour tests following EPA. Reference Methods 1-4, 7E and 10. Testing of subsequent gasifier· preheaters shall consist of one (1) twenty-one (21) minute test following EPA Reference Methods 3, 7E, 10, and 19. [District Rule 2201]

15. Source testing to measure NOx and CO emissions shall be conducted within 60 days of initial operation under this ATC. [District Rules 2201]

16. This unit shall be tested for compliance with the NOx and CO emissions limits at least once every twelve (12) months. After demonstrating compliance on two (2) consecutive annual source tests, the unit shall be tested not less than once every thirty-six (36) months. If the result of the 36-month source test demonstrates that the unit does not meet the applicable emission limits, the source testing frequency shall revert to at least once every twelve (12) months. [District Rules 4305, 4306, and 4320]

17. {110} The results of each source test shall be submitted to the District within 60 days thereafter. [District Rule 1081]

18. {109} Source testing shall be conducted using the methods and procedures approved by the District. The District must be notified at least 30 days prior to any compliance source test, and a source test plan must be submitted for approval at least 15 days prior to testing. [District Rule 1081]

19. The source test plan shall identify which basis (ppmv or lb/MMBtu) will be used to demonstrate compliance. [District Rules 4305, 4306, and 4320]

20. The following test methods shall be used: NOx (ppmv) - EPA Method 7E or ARB Method 100, NOx (lb/MMBtu) - EPA Method 19, CO (ppmv) - EPA Method 10 or 10B or ARB Method 100, stack gas oxygen - EPA Method 3 or 3A or ARB Method 100, SOx (lb/MMBtu) - ARB Method 100 or EPA Method 6, 6C or fuel gas sulfur content analysis and EPA Method 19, fuel gas sulfur content - EPA Method 11 or 15, ASTM D3246 or double GC for H2S and mercaptans performed in a laboratory, fuel gas hhv - ASTM D1826 or D1945 in conjunction with ASTM D3588. [District Rule s 4305, 4306 and 4320]

DRAFT

CONDITIONS CONTINUE ON NEXT PAGE

21. Fugitive VOC emission rate from the permit unit shall not exceed 73.5 lb/day based on the component count and emission factors from EPA document Protocol for Equipment Leak Emission Estimates (EPA-453/R-95-017), Table 2-1, SOCMI Average Emissions Factors and the applicable control efficiency for those components subject to a leak detection and repair (LDAR) program. Components serving the following streams associated with this permit unit shall be subject to a leak detection and repair (LDAR) program: methanol, propylene, H2S-laden methanol, CO2-laden methanol, and acid gas. The following control efficiencies in Table 5-2 of the EPA document shall apply to those components under an LDAR program: gas valves: 92%; light liquid valves: 88%; light liquid pump seals: 75%; and connectors: 93%. [District Rule 2201]

22. Fugitive CO emission rate from the permit unit shall not exceed 32.5 lb/day based on the component count, CO percentage in the fluid stream, VOC emission factors from Protocol for Equipment Leak Emission Estimates (EPA-453/R-95-017), Table 2-1, SOCMI Average Emissions Factors and the applicable control efficiency for those components subject to a leak detection and repair (LDAR) program. [District Rule 2201]

23. Emissions attributed to this permit unit shall consist of components serving the following process streams: methanol, syn gas, flash gas/gasification, shifted syn gas, propylene, sour water, H2S-laden methanol, CO2-laden methanol, acid gas, and ammonia-laden gas. [District Rule 2201]

24. Permittee shall maintain with the permit an accurate fugitive component count and the resulting emissions calculated using above specified leak rates and control efficiencies. [District Rule 2201]

25. The VOC content of the gas in the following streams shall not exceed 10% by weight: syn gas, flash gas/gasification, shifted syn gas, and sour water. [District Rule 2201]

26. Operator shall conduct quarterly gas sampling to qualify for exemption from fugitive component counts for those components handling fluids with VOC content equal to or less than 10% by weight. If gas samples are equal to or less than 10% VOC by weight for 8 consecutive quarterly samplings, sampling frequency shall only be required annually. [District Rule 2201]

27. VOC content of gas streams shall be determined by ASTM D1945, EPA Method 18 referenced as methane, or equivalent test method with prior District approval. [District Rule 2201]

28. All VOC sampling connections, open-ended valves, and lines shall be equipped with two closed valves or be sealed with blind flanges, caps, or threaded plugs except during actual use. [District Rule 2201]

29. Permittee shall maintain records of the VOC content test results for a period of five years and make such records available for inspection upon request. [District Rule 1070]

30. For the components serving the methanol, propylene, H2S-laden methanol, and the CO2-laden methanol streams, except for those components specified in the condition below, a component shall be considered leaking if one of more of the conditions specified in Rule 4455 Sections 5.1.4.1 through 5.1.4.4 of the rule exist at the facility. [District Rule 2201]

31. For valves and connectors serving the methanol, propylene, H2S-laden methanol, and the CO2-laden methanol streams, a leak shall be defined as a reading of methane in excess of 100 ppmv above background when measured per EPA Method 21. For pump and compressor seals serving the methanol, propylene, H2S-laden methanol, and the CO2-laden methanol streams, a leak shall be defined as a reading of methane in excess of 500 ppmv above background when measure per EPA Method 21. [District Rule 2201]

32. All records required by this permit shall be retained for a period of at least 5 years and shall be made available to the District, ARB, and USEPA upon request. [District Rules 1070 and 2201]

33. {3433} Disturbances of soil related to any construction, demolition, excavation, extraction, or other earthmoving activities shall comply with the requirements for fugitive dust control in District Rule 8021 unless specifically exempted under Section 4.0 of Rule 8021 or Rule 8011. [District Rules 8011 and 8021]

34. {3434} An owner/operator shall submit a Dust Control Plan to the APCO prior to the start of any construction activity on any site that will include 10 acres or more of disturbed surface area for residential developments, or 5 acres or more of disturbed surface area for non-residential development, or will include moving, depositing, or relocating more than 2,500 cubic yards per day of bulk materials on at least three days. [District Rules 8011 and 8021]

DRAFT

CONDITIONS CONTINUE ON NEXT PAGE

35. {3435} An owner/operator shall prevent or cleanup any carryout or trackout in accordance with the requirements of District Rule 8041 Section 5.0, unless specifically exempted under Section 4.0 of Rule 8041 (8/19/04) or Rule 8011(8/19/04). [District Rules 8011 and 8021]

36. {3436} Whenever open areas are disturbed, or vehicles are used in open areas, the facility shall comply with the requirements of Section 5.0 of District Rule 8051, unless specifically exempted under Section 4.0 of Rule 8051 or Rule 8011. [District Rules 8011 and 8051]

37. {3437} Any paved road or unpaved road shall comply with the requirements of District Rule 8061 unless specifically exempted under Section 4.0 of Rule 8061 or Rule 8011. [District Rules 8011 and 8061]

38. {3438} Water, gravel, roadmix, or chemical/organic dust stabilizers/suppressants, vegetative materials, or other District-approved control measure shall be applied to unpaved vehicle travel areas as required to limit Visible Dust Emissions to 20% opacity and comply with the requirements for a stabilized unpaved road as defined in Section 3.59 of District Rule 8011. [District Rule 8011 and 8071]

39. {3439} Where dusting materials are allowed to accumulate on paved surfaces, the accumulation shall be removed daily or water and/or chemical/organic dust stabilizers/suppressants shall be applied to the paved surface as required to maintain continuous compliance with the requirements for a stabilized unpaved road as defined in Section 3.59 of District Rule 8011 and limit Visible Dust Emissions (VDE) to 20% opacity. [District Rule 8011 and 8071]

40. {3440} On each day that 50 or more Vehicle Daily Trips or 25 or more Vehicle Daily Trips with 3 axles or more will occur on an unpaved vehicle/equipment traffic area, permittee shall apply water, gravel, roadmix, or chemical/organic dust stabilizers/suppressants, vegetative materials, or other District-approved control measure as required to limit Visible Dust Emissions to 20% opacity and comply with the requirements for a stabilized unpaved road as defined in Section 3.59 of District Rule 8011. [District Rule 8011 and 8071]

41. {3441} Whenever any portion of the site becomes inactive, Permittee shall restrict access and periodically stabilize any disturbed surface to comply with the conditions for a stabilized surface as defined in Section 3.58 of District Rule 8011. [District Rules 8011 and 8071]

42. {3442} Records and other supporting documentation shall be maintained as required to demonstrate compliance with the requirements of the rules under Regulation VIII only for those days that a control measure was implemented. Such records shall include the type of control measure(s) used, the location and extent of coverage, and the date, amount, and frequency of application of dust suppressant, manufacturer's dust suppressant product information sheet that identifies the name of the dust suppressant and application instructions. Records shall be kept for one year following project completion that results in the termination of all dust generating activities. [District Rules 8011, 8031, and 8071]

DRAFT

San Joaquin Valley
Air Pollution Control District

AUTHORITY TO CONSTRUCT

PERMIT NO: S-7616-3-0

ISSUANCE DATE: DRAFT

LEGAL OWNER OR OPERATOR: HYDROGEN ENERGY CALIFORNIA, LLC
MAILING ADDRESS: ONE WORLD TRADE CENTER
SUITE 1600
LONG BEACH, CA 90831-1600

LOCATION: SEC 10 T30S R 24E
TUPMAN, CA

EQUIPMENT DESCRIPTION:
1695 MMBTU/HR ELEVATED FLARE WITH 0.5 MMBTU/HR NATURAL GAS-FIRED PILOT PRIMARILY SERVING GASIFICATION BLOCK

CONDITIONS

1. The permittee shall enter into an Air Quality Mitigation Settlement Agreement with the District prior to issuance of the Final Determination of Compliance, or such other time that is mutually agreeable.
2. Prior to initial operation of S-7616-2, -3, -5, -6, -7, -9, and -13, permittee shall provide NOx emission reduction credits for the following quantity of emissions: 1st quarter: 92,319 lb, 2nd quarter: 92,319 lb, 3rd quarter: 92,319 lb, and 4th quarter: 92,319 lb. Offsets shall be provided at the applicable offset ratio specified in Table 4-2 of Rule 2201 (as amended 9/21/06). [District Rule 2201]
3. Prior to initial operation of S-7616-1 through -7 and -9 through -13, permittee shall provide PM10 emission reduction credits for the following quantity of emissions: 1st quarter: 48,489 lb, 2nd quarter: 48,489 lb, 3rd quarter: 48,489 lb, and 4th quarter: 48,489 lb. Offsets shall be provided at the applicable offset ratio specified in Table 4-2 of Rule 2201 (as amended 9/21/06). SOx ERCs may be used to offset PM10 increases at an interpollutant ratio of 1.0 lb-SOx: 1.0 lb-PM10. [District Rule 2201]
4. Prior to initial operation of S-7616-2, -3, -5, -6, -7, -9, and -13, permittee shall provide SOx emission reduction credits for the following quantity of emissions: 1st quarter: 5,315 lb, 2nd quarter: 5,315 lb, 3rd quarter: 5,315 lb, and 4th quarter: 5,315 lb. Offsets shall be provided at the applicable offset ratio specified in Table 4-2 of Rule 2201 (as amended 9/21/06). [District Rule 2201]

CONDITIONS CONTINUE ON NEXT PAGE

YOU MUST NOTIFY THE DISTRICT COMPLIANCE DIVISION AT (661) 392-5500 WHEN CONSTRUCTION IS COMPLETED AND PRIOR TO OPERATING THE EQUIPMENT OR MODIFICATIONS AUTHORIZED BY THIS AUTHORITY TO CONSTRUCT. This is NOT a PERMIT TO OPERATE. Approval or denial of a PERMIT TO OPERATE will be made after an inspection to verify that the equipment has been constructed in accordance with the approved plans, specifications and conditions of this Authority to Construct, and to determine if the equipment can be operated in compliance with all Rules and Regulations of the San Joaquin Valley Unified Air Pollution Control District. Unless construction has commenced pursuant to Rule 2050, this Authority to Construct shall expire and application shall be cancelled two years from the date of issuance. The applicant is responsible for complying with all laws, ordinances and regulations of all other governmental agencies which may pertain to the above equipment.

Seyed Sadredin, Executive Director / APCO

DRAFT

DAVID WARNER, Director of Permit Services
S-7616-3-0 : Jun 16 2010 2:07PM – RAMIREZH : Joint Inspection NOT Required

5. Prior to initial operation of S-7616-2, -3, -5 through -9, and -13, permittee shall provide VOC emission reduction credits for the following quantity of emissions: 1st quarter: 31,817 lb, 2nd quarter: 31,817 lb, 3rd quarter: 31,817 lb, and 4th quarter: 31,817 lb. Offsets shall be provided at the applicable offset ratio specified in Table 4-2 of Rule 2201 (as amended 9/21/06). [District Rule 2201]

6. ERC certificate numbers C-1058-2, C-1058-5, C-1059-2, S-3275-5, S-3273-2, S-3305-1, and/or S-3306-1 (or a certificate split from these certificates) shall be used to supply the required offsets, unless a revised offsetting proposal is received and approved by the District, upon which this Authority to Construct shall be reissued, administratively specifying the new offsetting proposal. Original public noticing requirements, if any, shall be duplicated prior to reissuance of this Demonstration of Compliance. [District Rule 2201]

7. Permittee shall submit an application to comply with Rule 2520 - Federally Mandated Operating Permits within twelve months of commencing operation. [District Rule 2520]

8. Permittee shall submit an application to comply with Rule 2540 - Acid Rain Program within twelve months of commencing operation. [District Rule 2540]

9. {98} No air contaminant shall be released into the atmosphere which causes a public nuisance. [District Rule 4102]

10. Flare shall be equipped with flare gas volume flowmeter. [District Rule 2201]

11. Maximum amount of gas combusted in flare shall not exceed 91,500 MMBtu/day of unshifted gas nor 105,400 MMBtu/day of shifted gas. Permittee shall maintain records of amount of gas combusted, gas type, and reason for flaring event. [District Rule 2201]

12. Emissions from the flare shall not exceed any of the following (based on total gas combusted): PM10: 0.0 lb/MMBtu; NOx (as NO2): 0.068 lb/MMBtu; VOC: 0.0 lb/MMBtu; or CO: 0.37 lb/MMBtu when flaring shifted gas and CO: 2.0 lb/MMBtu when flaring unshifted gas. [District Rule 2201]

13. SOx emissions (as SO2) shall not exceed 113.9 lb/day. [District Rule 2201]

14. The sulfur content of the gas flared shall be limited 0 ppmv, except during combustion turbine generator washes, which will be limited to no more than 5 ppmv. [District Rule 2201]

15. Permittee shall record the sulfur content and the quantity of gas flared and shall demonstrate compliance with the SOx emission limit. [District Rule 2201]

16. No air contaminant shall be discharged into the atmosphere for a period or periods aggregating more than five minutes in any two hours which is as dark as, or darker than, Ringelmann 1/4 or 5% opacity. [District Rule 4101 and 40 CFR 60.18]

17. A trained observer, as defined in EPA Method 22, shall check visible emissions at least once annually for a period of 15 minutes. If visible emissions are detected at any time during this period, the observation period shall be extended to two hours. A record containing the results of these observations shall be maintained, which also includes company name, process unit, observer's name and affiliation, date, estimated wind speed and direction, sky condition, and the observer's location relative to the source and sun. [District Rules 4311]

18. Flare pilot shall be fired solely on PUC quality natural gas. [District Rule 2201]

19. A flame shall be present at all times when combustible gases are vented through this flare. [District Rule 2201 and 4311, 5.2]

20. This flare shall be equipped with an automatic ignition system. [District Rule 2201 and 4311, 5.3]

21. A flame sensing or heat sensing device such as a thermocouple, ultraviolet beam sensor, infrared sensor, or an equivalent device, capable of continuously detecting at least one pilot flame or the flare flame is present shall be operational. [District Rule 4311, 5.4]

22. Flare gas pressure shall not be less than 5 psig when incinerating combustible gasses. [District Rule 4311, 5.6]

23. 90 days prior to installation of the flare, permittee shall submit a flare minimization plan (FMP) that complies with the requirements of Rule 4311 Section 6.5 to the APCO for approval. [District Rule 4311, 6.5]

24. Copies of approved flare minimization plan pursuant to Rule 4311 Section 6.5 shall be made readily available to the APCO, ARB, and EPA upon request for a minimum of 5 years. [District Rule 4311, 6.1]

DRAFT

CONDITIONS CONTINUE ON NEXT PAGE

25. Copies of compliance determination pursuant to 40 CFR 60.18 shall be made readily available to the APCO, ARB, and EPA upon request for a minimum of 5 years. [District Rule 4311, 6.1]

26. Copies of monitoring data collected pursuant to Rule 4311 Section 5.10 shall be made readily available to the APCO, ARB, and EPA upon request for a minimum of 5 years. [District Rule 4311, 6.1]

27. Effective on and after July 1, 2011, the operator shall notify the APCO of an unplanned flaring event within 24 hours after the start of the next business day or within 24 hours of their discovery, which ever occurs first. The notification shall include the flare source identification, the start date and time, and the end date and time. [District Rule 4311, 6.2]

28. Effective on and after July 1, 2012, and annually thereafter, the operator of a flare subject to flare minimization plans pursuant to Section 5.8 shall submit an annual report to the APCO that summarizes all Reportable Flaring Events as defined in Rule 4311 Section 3.0 that occurred during the previous 12 month period. The report shall be submitted within 30 days following the end of the twelve month period of the previous year. [District Rule 4311, 6.2]

29. Effective on and after July 1, 2012, and annually thereafter, the operator of a flare subject to flare monitoring requirements pursuant to Sections 5.10, 6.6, 6.7, 6.8, 6.9, and 6.10, as appropriate, shall submit an annual report to the APCO as specified in Rule 4311 Section 6.2.3 within 30 days following the end of each 12 month period. [District Rule 4311, 6.2]

30. The operator shall submit a flare minimization plan (FMP) as specified in Rule 4311 Section 6.5 to the APCO for approval. [District Rule 4311, 6.5]

31. Effective on and after July 1, 2011, pursuant to Rule 4311 Section 6.6, the operator shall monitor vent gas composition using one the methods pursuant to Section 6.6.1 through Section 6.6.5 as appropriate. [District Rule 4311, 6.6]

32. Effective on and after July 1, 2011, the operator shall monitor the volumetric flows of purge and pilot gases with flow measuring devices. [District Rule 4311, Section 6.7]

33. Effective on and after July 1, 2011, if the flare is equipped with a water seal, the operator shall monitor and record the water level and pressure of the water seal that services each flare daily. [District Rule 4311, Section 6.8]

34. Effective on and after July 1, 2011, periods of flare monitoring system in operation greater than 24 continuous hours shall be reported by the following working day, followed by notification of resumption of monitoring. Periods of inoperation of monitoring equipment shall not exceed 14 days per any 18-consecutive-month period. Periods of flare monitoring system inoperation do not include the periods when the system feeding the flare is not operating. [District Rule 4311, 6.9]

35. Effective on and after July 1, 2011, during periods of inoperation of continuous analyzers or auto-samplers installed pursuant to Section 6.6, operators responsible for monitoring shall take one sample within 30 minutes of the commencement of flaring, from the flare header or from an alternate location at which samples are representative of vent gas composition and have samples analyzed pursuant to Section 6.3.4. During periods of inoperation of flow monitors required by Section 5.10, flow shall be calculated using good engineering practices. [District Rule 4311, 6.9]

36. Effective on and after July 1, 2011, operator shall maintain and calibrate all required monitors and recording devices in accordance with the applicable manufacturer's specifications. In order to claim that a manufacturer's specification is not applicable, the person responsible for emissions must have, and follow, a written maintenance policy that was developed for the device in question. The written policy must explain and justify the difference between the written procedure and the manufacturer's procedure. [District Rule 4311, 6.9]

37. Effective on and after July 1, 2011, all in-line continuous analyzer and flow monitoring data must be continuously recorded by an electronic data acquisition system capable of one-minute averages. Flow monitoring data shall be recorded as one-minute averages. [District Rule 4311, 6.9]

38. {3246} All records shall be maintained and retained on-site for a period of at least 5 years and shall be made available for District inspection upon request. [District Rule 1070]

39. {3433} Disturbances of soil related to any construction, demolition, excavation, extraction, or other earthmoving activities shall comply with the requirements for fugitive dust control in District Rule 8021 unless specifically exempted under Section 4.0 of Rule 8021 or Rule 8011. [District Rules 8011 and 8021]

DRAFT

CONDITIONS CONTINUE ON NEXT PAGE

40. {3434} An owner/operator shall submit a Dust Control Plan to the APCO prior to the start of any construction activity on any site that will include 10 acres or more of disturbed surface area for residential developments, or 5 acres or more of disturbed surface area for non-residential development, or will include moving, depositing, or relocating more than 2,500 cubic yards per day of bulk materials on at least three days. [District Rules 8011 and 8021]

41. {3435} An owner/operator shall prevent or cleanup any carryout or trackout in accordance with the requirements of District Rule 8041 Section 5.0, unless specifically exempted under Section 4.0 of Rule 8041 (8/19/04) or Rule 8011(8/19/04). [District Rules 8011 and 8021]

42. {3436} Whenever open areas are disturbed, or vehicles are used in open areas, the facility shall comply with the requirements of Section 5.0 of District Rule 8051, unless specifically exempted under Section 4.0 of Rule 8051 or Rule 8011. [District Rules 8011 and 8051]

43. {3437} Any paved road or unpaved road shall comply with the requirements of District Rule 8061 unless specifically exempted under Section 4.0 of Rule 8061 or Rule 8011. [District Rules 8011 and 8061]

44. {3438} Water, gravel, roadmix, or chemical/organic dust stabilizers/suppressants, vegetative materials, or other District-approved control measure shall be applied to unpaved vehicle travel areas as required to limit Visible Dust Emissions to 20% opacity and comply with the requirements for a stabilized unpaved road as defined in Section 3.59 of District Rule 8011. [District Rule 8011 and 8071]

45. {3439} Where dusting materials are allowed to accumulate on paved surfaces, the accumulation shall be removed daily or water and/or chemical/organic dust stabilizers/suppressants shall be applied to the paved surface as required to maintain continuous compliance with the requirements for a stabilized unpaved road as defined in Section 3.59 of District Rule 8011 and limit Visible Dust Emissions (VDE) to 20% opacity. [District Rule 8011 and 8071]

46. {3440} On each day that 50 or more Vehicle Daily Trips or 25 or more Vehicle Daily Trips with 3 axles or more will occur on an unpaved vehicle/equipment traffic area, permittee shall apply water, gravel, roadmix, or chemical/organic dust stabilizers/suppressants, vegetative materials, or other District-approved control measure as required to limit Visible Dust Emissions to 20% opacity and comply with the requirements for a stabilized unpaved road as defined in Section 3.59 of District Rule 8011. [District Rule 8011 and 8071]

47. {3441} Whenever any portion of the site becomes inactive, Permittee shall restrict access and periodically stabilize any disturbed surface to comply with the conditions for a stabilized surface as defined in Section 3.58 of District Rule 8011. [District Rules 8011 and 8071]

48. {3442} Records and other supporting documentation shall be maintained as required to demonstrate compliance with the requirements of the rules under Regulation VIII only for those days that a control measure was implemented. Such records shall include the type of control measure(s) used, the location and extent of coverage, and the date, amount, and frequency of application of dust suppressant, manufacturer's dust suppressant product information sheet that identifies the name of the dust suppressant and application instructions. Records shall be kept for one year following project completion that results in the termination of all dust generating activities. [District Rules 8011, 8031, and 8071]

DRAFT

San Joaquin Valley
Air Pollution Control District

AUTHORITY TO CONSTRUCT

DRAFT

PERMIT NO: S-7616-4-0

ISSUANCE DATE: DRAFT

LEGAL OWNER OR OPERATOR: HYDROGEN ENERGY CALIFORNIA, LLC
MAILING ADDRESS: ONE WORLD TRADE CENTER
SUITE 1600
LONG BEACH, CA 90831-1600

LOCATION: SEC 10 T30S R 24E
TUPMAN, CA

EQUIPMENT DESCRIPTION:
42,300 GALLONS PER MINUTE MULTI-CELL MECHANICAL-DRAFT COOLING TOWER WITH HIGH-EFFICIENCY DRIFT ELIMINATORS, SERVING GASIFICATION PROCESS AREA

CONDITIONS

1. The permittee shall enter into an Air Quality Mitigation Settlement Agreement with the District prior to issuance of the Final Determination of Compliance, or such other time that is mutually agreeable.
2. Prior to initial operation of S-7616-1 through -7 and -9 through -13, permittee shall provide PM10 emission reduction credits for the following quantity of emissions: 1st quarter: 48,489 lb, 2nd quarter: 48,489 lb, 3rd quarter: 48,489 lb, and 4th quarter: 48,489 lb. Offsets shall be provided at the applicable offset ratio specified in Table 4-2 of Rule 2201 (as amended 9/21/06). SOx ERCs may be used to offset PM10 increases at an interpollutant ratio of 1.0 lb-SOx: 1.0 lb-PM10. [District Rule 2201]
3. ERC certificate numbers C-1058-2, C-1058-5, C-1059-2, S-3275-5, S-3273-2, S-3305-1, and/or S-3306-1 (or a certificate split from these certificates) shall be used to supply the required offsets, unless a revised offsetting proposal is received and approved by the District, upon which this Authority to Construct shall be reissued, administratively specifying the new offsetting proposal. Original public noticing requirements, if any, shall be duplicated prior to reissuance of this Demonstration of Compliance. [District Rule 2201]
4. Permittee shall submit an application to comply with Rule 2520 - Federally Mandated Operating Permits within twelve months of commencing operation. [District Rule 2520]
5. Permittee shall submit an application to comply with Rule 2540 - Acid Rain Program within twelve months of commencing operation. [District Rule 2540]

CONDITIONS CONTINUE ON NEXT PAGE

YOU MUST NOTIFY THE DISTRICT COMPLIANCE DIVISION AT (661) 392-5500 WHEN CONSTRUCTION IS COMPLETED AND PRIOR TO OPERATING THE EQUIPMENT OR MODIFICATIONS AUTHORIZED BY THIS AUTHORITY TO CONSTRUCT. This is NOT a PERMIT TO OPERATE. Approval or denial of a PERMIT TO OPERATE will be made after an inspection to verify that the equipment has been constructed in accordance with the approved plans, specifications and conditions of this Authority to Construct, and to determine if the equipment can be operated in compliance with all Rules and Regulations of the San Joaquin Valley Unified Air Pollution Control District. Unless construction has commenced pursuant to Rule 2050, this Authority to Construct shall expire and application shall be cancelled two years from the date of issuance. The applicant is responsible for complying with all laws, ordinances and regulations of all other governmental agencies which may pertain to the above equipment.

Seyed Sadredin, Executive Director/APCO

DRAFT

DAVID WARNER, Director of Permit Services
S-7616-4-0 : Jun 16 2010 2:07PM – RAMIREZH : Joint Inspection NOT Required

6. Permittee shall submit cooling tower design details including the cooling tower type, drift eliminator design details, and materials of construction to the District at least 90 days before the tower is operated. [District Rule 7012]

7. {271} All equipment shall be maintained in good operating condition and shall be operated in a manner to minimize emissions of air contaminants into the atmosphere. [District NSR Rule]

8. {98} No air contaminant shall be released into the atmosphere which causes a public nuisance. [District Rule 4102]

9. {15} No air contaminant shall be discharged into the atmosphere for a period or periods aggregating more than three minutes in any one hour which is as dark as, or darker than, Ringelmann 1 or 20% opacity. [District Rule 4101]

10. {14} Particulate matter emissions shall not exceed 0.1 grains/dscf in concentration. [District Rule 4201]

11. No hexavalent chromium containing compounds shall be added to cooling tower circulating water. [District Rule 7012]

12. Drift eliminator drift rate shall not exceed 0.0005%. [District Rule 2201]

13. PM10 emission rate from the cooling tower shall not exceed 22.9 lb/day. [District Rule 2201]

14. Compliance with the PM10 daily emission limit shall demonstrated as follows: PM10 lb/day = circulating water recirculation rate x total dissolved solids concentration in the blowdown water x design drift rate. [District Rule 2201]

15. Compliance with the PM10 emission limit shall be determined by blowdown water sample analysis by independent laboratory within 120 days of initial operation and quarterly thereafter. [District Rule 1081]

16. {3433} Disturbances of soil related to any construction, demolition, excavation, extraction, or other earthmoving activities shall comply with the requirements for fugitive dust control in District Rule 8021 unless specifically exempted under Section 4.0 of Rule 8021 or Rule 8011. [District Rules 8011 and 8021]

17. {3434} An owner/operator shall submit a Dust Control Plan to the APCO prior to the start of any construction activity on any site that will include 10 acres or more of disturbed surface area for residential developments, or 5 acres or more of disturbed surface area for non-residential development, or will include moving, depositing, or relocating more than 2,500 cubic yards per day of bulk materials on at least three days. [District Rules 8011 and 8021]

18. {3435} An owner/operator shall prevent or cleanup any carryout or trackout in accordance with the requirements of District Rule 8041 Section 5.0, unless specifically exempted under Section 4.0 of Rule 8041 (8/19/04) or Rule 8011(8/19/04). [District Rules 8011 and 8021]

19. {3436} Whenever open areas are disturbed, or vehicles are used in open areas, the facility shall comply with the requirements of Section 5.0 of District Rule 8051, unless specifically exempted under Section 4.0 of Rule 8051 or Rule 8011. [District Rules 8011 and 8051]

20. {3437} Any paved road or unpaved road shall comply with the requirements of District Rule 8061 unless specifically exempted under Section 4.0 of Rule 8061 or Rule 8011. [District Rules 8011 and 8061]

21. {3438} Water, gravel, roadmix, or chemical/organic dust stabilizers/suppressants, vegetative materials, or other District-approved control measure shall be applied to unpaved vehicle travel areas as required to limit Visible Dust Emissions to 20% opacity and comply with the requirements for a stabilized unpaved road as defined in Section 3.59 of District Rule 8011. [District Rule 8011 and 8071]

22. {3439} Where dusting materials are allowed to accumulate on paved surfaces, the accumulation shall be removed daily or water and/or chemical/organic dust stabilizers/suppressants shall be applied to the paved surface as required to maintain continuous compliance with the requirements for a stabilized unpaved road as defined in Section 3.59 of District Rule 8011 and limit Visible Dust Emissions (VDE) to 20% opacity. [District Rule 8011 and 8071]

23. {3440} On each day that 50 or more Vehicle Daily Trips or 25 or more Vehicle Daily Trips with 3 axles or more will occur on an unpaved vehicle/equipment traffic area, permittee shall apply water, gravel, roadmix, or chemical/organic dust stabilizers/suppressants, vegetative materials, or other District-approved control measure as required to limit Visible Dust Emissions to 20% opacity and comply with the requirements for a stabilized unpaved road as defined in Section 3.59 of District Rule 8011. [District Rule 8011 and 8071]

DRAFT

CONDITIONS CONTINUE ON NEXT PAGE

24. {3441} Whenever any portion of the site becomes inactive, Permittee shall restrict access and periodically stabilize any disturbed surface to comply with the conditions for a stabilized surface as defined in Section 3.58 of District Rule 8011. [District Rules 8011 and 8071]

25. {3442} Records and other supporting documentation shall be maintained as required to demonstrate compliance with the requirements of the rules under Regulation VIII only for those days that a control measure was implemented. Such records shall include the type of control measure(s) used, the location and extent of coverage, and the date, amount, and frequency of application of dust suppressant, manufacturer's dust suppressant product information sheet that identifies the name of the dust suppressant and application instructions. Records shall be kept for one year following project completion that results in the termination of all dust generating activities. [District Rules 8011, 8031, and 8071]

DRAFT

San Joaquin Valley
Air Pollution Control District

AUTHORITY TO CONSTRUCT

DRAFT

PERMIT NO: S-7616-5-0 **ISSUANCE DATE:** DRAFT

LEGAL OWNER OR OPERATOR: HYDROGEN ENERGY CALIFORNIA, LLC
MAILING ADDRESS: ONE WORLD TRADE CENTER
SUITE 1600
LONG BEACH, CA 90831-1600

LOCATION: SEC 10 T30S R 24E
TUPMAN, CA

EQUIPMENT DESCRIPTION:
SULFUR RECOVERY SYSTEM CONSISTING OF SULFUR RECOVERY UNIT (SRU), A TAIL GAS TREATING UNIT (TGTU), AND A 10 MMBTU/HR NATURAL GAS-FIRED TAIL GAS THERMAL OXIDIZER, AND MISCELLANEOUS TANKS, COMPRESSORS, PUMPS, CONDENSERS, HEAT EXCHANGERS, PIPING

CONDITIONS

1. The permittee shall enter into an Air Quality Mitigation Settlement Agreement with the District prior to issuance of the Final Determination of Compliance, or such other time that is mutually agreeable.
2. Prior to initial operation of S-7616-2, -3, -5, -6, -7, -9, and -13, permittee shall provide NOx emission reduction credits for the following quantity of emissions: 1st quarter: 92,319 lb, 2nd quarter: 92,319 lb, 3rd quarter: 92,319 lb, and 4th quarter: 92,319 lb. Offsets shall be provided at the applicable offset ratio specified in Table 4-2 of Rule 2201 (as amended 9/21/06). [District Rule 2201]
3. Prior to initial operation of S-7616-1 through -7 and -9 through -13, permittee shall provide PM10 emission reduction credits for the following quantity of emissions: 1st quarter: 48,489 lb, 2nd quarter: 48,489 lb, 3rd quarter: 48,489 lb, and 4th quarter: 48,489 lb. Offsets shall be provided at the applicable offset ratio specified in Table 4-2 of Rule 2201 (as amended 9/21/06). SOx ERCs may be used to offset PM10 increases at an interpollutant ratio of 1.0 lb-SOx: 1.0 lb-PM10. [District Rule 2201]
4. Prior to initial operation of S-7616-2, -3, -5, -6, -7, -9, and -13, permittee shall provide SOx emission reduction credits for the following quantity of emissions: 1st quarter: 5,315 lb, 2nd quarter: 5,315 lb, 3rd quarter: 5,315 lb, and 4th quarter: 5,315 lb. Offsets shall be provided at the applicable offset ratio specified in Table 4-2 of Rule 2201 (as amended 9/21/06). [District Rule 2201]

CONDITIONS CONTINUE ON NEXT PAGE

YOU MUST NOTIFY THE DISTRICT COMPLIANCE DIVISION AT (661) 392-5500 WHEN CONSTRUCTION IS COMPLETED AND PRIOR TO OPERATING THE EQUIPMENT OR MODIFICATIONS AUTHORIZED BY THIS AUTHORITY TO CONSTRUCT. This is NOT a PERMIT TO OPERATE. Approval or denial of a PERMIT TO OPERATE will be made after an inspection to verify that the equipment has been constructed in accordance with the approved plans, specifications and conditions of this Authority to Construct, and to determine if the equipment can be operated in compliance with all Rules and Regulations of the San Joaquin Valley Unified Air Pollution Control District. Unless construction has commenced pursuant to Rule 2050, this Authority to Construct shall expire and application shall be cancelled two years from the date of issuance. The applicant is responsible for complying with all laws, ordinances and regulations of all other governmental agencies which may pertain to the above equipment.

Seyed Sadredin, Executive Director / APCO

DRAFT

DAVID WARNER, Director of Permit Services
S-7616-5-0 : Jun 16 2010 2:07PM -- RAMIREZH : Joint Inspection NOT Required

5. Prior to initial operation of S-7616-2, -3, -5 through -9, and -13, permittee shall provide VOC emission reduction credits for the following quantity of emissions: 1st quarter: 31,817 lb, 2nd quarter: 31,817 lb, 3rd quarter: 31,817 lb, and 4th quarter: 31,817 lb. Offsets shall be provided at the applicable offset ratio specified in Table 4-2 of Rule 2201 (as amended 9/21/06). [District Rule 2201]

6. ERC certificate numbers C-1058-2, C-1058-5, C-1059-2, S-3275-5, S-3273-2, S-3305-1, and/or S-3306-1 (or a certificate split from these certificates) shall be used to supply the required offsets, unless a revised offsetting proposal is received and approved by the District, upon which this Authority to Construct shall be reissued, administratively specifying the new offsetting proposal. Original public noticing requirements, if any, shall be duplicated prior to reissuance of this Demonstration of Compliance. [District Rule 2201]

7. Permittee shall submit an application to comply with Rule 2520 - Federally Mandated Operating Permits within twelve months of commencing operation. [District Rule 2520]

8. Permittee shall submit an application to comply with Rule 2540 - Acid Rain Program within twelve months of commencing operation. [District Rule 2540]

9. Sulfur recovery unit shall include two Claus converters, two reheaters, three sulfur condensers, waste gas boiler, reaction furnace, oxygen preheater, main burner, acid gas preheater, acid gas wash drum, acid gas wash drum pumps, sour water stripper (SWS) acid gas knockout drum, SWS acid gas preheater, SWS acid gas drum pumps, combustion air blower, and piping. [District Rule 2201]

10. Tail gas treating unit (TGTU) shall include a tail gas heater, tail gas trim heater, hydrogenation reactor, reactor effluent cooler, contact condenser/desuperheater, desuperheater pumps, contact condenser cooler, TGTU absorber, TGTU absorber water wash pumps, TGTU rich amine pump, lean amine trim cooler, lean amine air cooler, leam amine pumps, lean/rich amine exchanger, regenerator, regenerator overhead condenser, overhead accumulator, regenerator reflux pumps, and regenerator reboiler. [District Rule 2201]

11. Operation shall include continuously recording H2S monitor for incinerator inlet (on the TGTU absorber overhead) and incinerator with continuously recording SO2 and O2 monitors. [District Rule 2201]

12. Exhaust stack shall be equipped with adequate provisions facilitating the collection of samples consistent with EPA test methods. [District Rule 1080]

13. Incinerator firebox temperature shall be maintained above 1200 F. [District Rule 2201]

14. Sulfur production shall not exceed 180 short tons/day. [District Rule 2201]

15. Shutdown is defined as the period beginning with the termination of acid gas feed and the initiation of fuel feed (for the purpose of heat stripping sulfur from the internal surfaces of the SRU). [District Rule 2201]

16. Warm standby is defined as the period between shutdown and startup when the SRU feed is solely natural gas. [District Rule 2201]

17. Startup is defined as the period beginning with the introduction (or increased utilization) of natural to the SRU to raise the temperature of the catalytic reactors to operating temperature (approximately 350 degrees F). Startup ends when the concentration of H2S in the TGTU absorber offgas does not exceed 10 ppmv (moving three hour average). [District Rule 2201]

18. Except during shutdown, warm standby, startup, and breakdown (as defined in Rule 1100) conditions, concentration of H2S in the TGTU absorber offgas shall not exceed 10 ppmv H2S (moving 3 hour average). [District Rule 2201]

19. The permittee shall, at all times including periods of startup, shutdown, and malfunction, maintain and operate the SRU and associated control equipment in a manner consistent with good air pollution control practice for minimizing emissions. [District Rule 2201]

20. In case of any exceedance of any H2S or SOx (as SO2) emission limit or any malfunction, permittee shall begin actions to minimize emissions exceedance or amount of sour gas flared, by removing high sulfur feed stocks and reducing unit rates, or by other means approved by the District. [District Rule 2201]

21. Emission rates from the tail gas thermal oxidizer shall not exceed the following: NOx: 0.24 lb/MMBtu; CO: 0.20 lb/MMBtu; VOC: 0.0055 lb/MMBtu; PM10: 0.0076 lb/MMBtu. [District Rule 2201]

DRAFT

CONDITIONS CONTINUE ON NEXT PAGE

22. SOx (as SOx) emissions from the tail gas thermal oxidizer shall not exceed 0.0204 MMBtu/hr for the disposal of SRU startup gas nor 2 lb/hr for the disposal of the process vent gas. [District Rule 2201]

23. During SRU shutdown, SRU tail gas shall be directed to the TGTU provided the O2 content of the SRU tail gas is less than or equal to 0.5% by weight as measured with portable O2 analyzer or equivalent CO value as measured by the CO/CO2 analyzer. During such periods TGTU tail gas shall be directed to the amine system. During the final 12 hours of SRU shutdown, the SRU tail gas may bypass the TGTU and be introduced directly to the incinerator. [District Rule 2201]

24. During SRU warm standby, SRU tail gas may bypass the TGTU and be introduced directly to the incinerator. [District Rule 2201]

25. During SRU startup (after being completely down), SRU tail gas may bypass the TGTU and be introduced directly to the incinerator provided the O2 content of the SRU tail is greater than 0.5% by volume as measured with portable O2 analyzer or equivalent CO value as measured by the CO/CO2 analyzer. The duration in which the TGTU is bypassed shall not exceed 36 hours. [District Rule 2201]

26. During SRU startup (after being in warm standby), SRU tail gas shall be directed to the TGTU. Within 24 hours of directing the SRU tail gas to the TGTU, the TGTU absorber offgas H2S content shall not exceed 10 ppmv (three hour rolling average). [District Rule 2201]

27. Emissions for this unit shall be calculated using the arithmetic mean, pursuant to District Rule 1081(amended December 16, 1993), of 3 thirty-minute test runs for NOx and CO. [District Rule 2201]

28. All required source testing shall conform to the compliance testing procedures described in District Rule 1081(Last Amended December 19,1993). [District Rule 1081]

29. Fugitive VOC emission rate from the permit unit shall not exceed 34.2 lb/day based on the component count and emission factors from EPA document Protocol for Equipment Leak Emission Estimates (EPA-453/R-95-017), Table 2-1, SOCMI Average Emissions Factors. [District Rule 2201]

30. Fugitive CO emission rate from the permit unit shall not exceed 0.2 lb/day based on the component count, CO percentage in the fluid stream, VOC emission factors from Protocol for Equipment Leak Emission Estimates (EPA-453/R-95-017), Table 2-1, SOCMI Average Emissions Factors. [District Rule 2201]

31. Emissions attributed to this permit unit shall consist of components serving the following process streams: sulfur, tail gas treatment unit process, and tail gas treatment unit amine. [District Rule 2201]

32. Permittee shall maintain with the permit an accurate fugitive component count and the resulting emissions calculated using above specified leak rates and control efficiencies. [District Rule 2201]

33. The VOC content of the gas in the following streams shall not exceed 10% by weight: sulfur and tail gas treatment unit process. [District Rule 2201]

34. Operator shall conduct quarterly gas sampling to qualify for exemption from fugitive component counts for those components handling fluids with VOC content equal to or less than 10% by weight. If gas samples are equal to or less than 10% VOC by weight for 8 consecutive quarterly samplings, sampling frequency shall only be required annually. [District Rule 2201]

35. VOC content of gas streams shall be determined by ASTM D1945, EPA Method 18 referenced as methane, or equivalent test method with prior District approval. [District Rule 2201]

36. All VOC sampling connections, open-ended valves, and lines shall be equipped with two closed valves or be sealed with blind flanges, caps, or threaded plugs except during actual use. [District Rule 2201]

37. Permittee shall maintain records of the VOC content test results for a period of five years and make such records available for inspection upon request. [District Rule 1070]

38. For the components serving the methanol, propylene, H2S-laden methanol, and the CO2-laden methanol streams, except for those components specified in the condition below, a component shall be considered leaking if one of more of the conditions specified in Rule 4455 Sections 5.1.4.1 through 5.1.4.4 of the rule exist at the facility. [District Rule 2201]

DRAFT

CONDITIONS CONTINUE ON NEXT PAGE

39. For valves and connectors serving the methanol, propylene, H2S-laden methanol, and the CO2-laden methanol streams, a leak shall be defined as a reading of methane in excess of 100 ppmv above background when measured per EPA Method 21. For pump and compressor seals serving the methanol, propylene, H2S-laden methanol, and the CO2-laden methanol streams, a leak shall be defined as a reading of methane in excess of 500 ppmv above background when measure per EPA Method 21. [District Rule 2201]

40. All records required by this permit shall be retained for a period of at least 5 years and shall be made available to the District, ARB, and USEPA upon request. [District Rules 1070 and 2201]

41. Copies of all fuel invoices, gas purchase contracts, supplier certifications, and test results to determine compliance with the conditions of this permit shall be maintained. The operator shall record daily amount and type(s) of fuel(s) combusted and all dates on which unit is fired on any noncertified fuel. [District Rule 2201]

42. Particulate matter emissions shall not exceed 0.1 grain/dscf, 0.1 grain/dscf calculated to 12% CO2, nor 10 lb/hr. [District Rules 4201, 3.1 and 4301, 5.1 and 5.2.3]

43. For the sulfur recovery unit, operator shall not discharge or cause the discharge of any gases into the atmosphere in excess of 10 ppm by volume (dry basis) of SO2 at zero percent excess air. [District Rule 2201]

44. For the sulfur recovery unit, a continuous emissions monitoring system shall be installed, calibrated, operated, and reported. Operator shall report all 12-hour periods during which the average concentration of SO2 as measured by the SO2 continuous monitoring system exceeds 10 ppm (dry basis, zero percent excess air). [District Rule 2201]

45. Operator shall determine compliance with the SO2 and H2S standard using EPA Method 3, EPA Method 6, and EPA Method 15. [District Rule 2201]

46. {3433} Disturbances of soil related to any construction, demolition, excavation, extraction, or other earthmoving activities shall comply with the requirements for fugitive dust control in District Rule 8021 unless specifically exempted under Section 4.0 of Rule 8021 or Rule 8011. [District Rules 8011 and 8021]

47. {3434} An owner/operator shall submit a Dust Control Plan to the APCO prior to the start of any construction activity on any site that will include 10 acres or more of disturbed surface area for residential developments, or 5 acres or more of disturbed surface area for non-residential development, or will include moving, depositing, or relocating more than 2,500 cubic yards per day of bulk materials on at least three days. [District Rules 8011 and 8021]

48. {3435} An owner/operator shall prevent or cleanup any carryout or trackout in accordance with the requirements of District Rule 8041 Section 5.0, unless specifically exempted under Section 4.0 of Rule 8041 (8/19/04) or Rule 8011(8/19/04). [District Rules 8011 and 8021]

49. {3436} Whenever open areas are disturbed, or vehicles are used in open areas, the facility shall comply with the requirements of Section 5.0 of District Rule 8051, unless specifically exempted under Section 4.0 of Rule 8051 or Rule 8011. [District Rules 8011 and 8051]

50. {3437} Any paved road or unpaved road shall comply with the requirements of District Rule 8061 unless specifically exempted under Section 4.0 of Rule 8061 or Rule 8011. [District Rules 8011 and 8061]

51. {3438} Water, gravel, roadmix, or chemical/organic dust stabilizers/suppressants, vegetative materials, or other District-approved control measure shall be applied to unpaved vehicle travel areas as required to limit Visible Dust Emissions to 20% opacity and comply with the requirements for a stabilized unpaved road as defined in Section 3.59 of District Rule 8011. [District Rule 8011 and 8071]

52. {3439} Where dusting materials are allowed to accumulate on paved surfaces, the accumulation shall be removed daily or water and/or chemical/organic dust stabilizers/suppressants shall be applied to the paved surface as required to maintain continuous compliance with the requirements for a stabilized unpaved road as defined in Section 3.59 of District Rule 8011 and limit Visible Dust Emissions (VDE) to 20% opacity. [District Rule 8011 and 8071]

53. {3440} On each day that 50 or more Vehicle Daily Trips or 25 or more Vehicle Daily Trips with 3 axles or more will occur on an unpaved vehicle/equipment traffic area, permittee shall apply water, gravel, roadmix, or chemical/organic dust stabilizers/suppressants, vegetative materials, or other District-approved control measure as required to limit Visible Dust Emissions to 20% opacity and comply with the requirements for a stabilized unpaved road as defined in Section 3.59 of District Rule 8011. [District Rule 8011 and 8071]

DRAFT

CONDITIONS CONTINUE ON NEXT PAGE

54. {3441} Whenever any portion of the site becomes inactive, Permittee shall restrict access and periodically stabilize any disturbed surface to comply with the conditions for a stabilized surface as defined in Section 3.58 of District Rule 8011. [District Rules 8011 and 8071]

55. {3442} Records and other supporting documentation shall be maintained as required to demonstrate compliance with the requirements of the rules under Regulation VIII only for those days that a control measure was implemented. Such records shall include the type of control measure(s) used, the location and extent of coverage, and the date, amount, and frequency of application of dust suppressant, manufacturer's dust suppressant product information sheet that identifies the name of the dust suppressant and application instructions. Records shall be kept for one year following project completion that results in the termination of all dust generating activities. [District Rules 8011, 8031, and 8071]

DRAFT

San Joaquin Valley
Air Pollution Control District

AUTHORITY TO CONSTRUCT

PERMIT NO: S-7616-6-0

ISSUANCE DATE: DRAFT

LEGAL OWNER OR OPERATOR: HYDROGEN ENERGY CALIFORNIA, LLC
MAILING ADDRESS: ONE WORLD TRADE CENTER
SUITE 1600
LONG BEACH, CA 90831-1600

LOCATION: SEC 10 T30S R 24E
TUPMAN, CA

EQUIPMENT DESCRIPTION:
36 MMBTU/HR NATURAL GAS ASSIST ELEVATED FLARE WITH 0.3 MMBTU/HR NATURAL GAS FIRED PILOT, SERVING SULFUR RECOVERY UNIT

CONDITIONS

1. The permittee shall enter into an Air Quality Mitigation Settlement Agreement with the District prior to issuance of the Final Determination of Compliance, or such other time that is mutually agreeable.
2. Prior to initial operation of S-7616-2, -3, -5, -6, -7, -9, and -13, permittee shall provide NOx emission reduction credits for the following quantity of emissions: 1st quarter: 92,319 lb, 2nd quarter: 92,319 lb, 3rd quarter: 92,319 lb, and 4th quarter: 92,319 lb. Offsets shall be provided at the applicable offset ratio specified in Table 4-2 of Rule 2201 (as amended 9/21/06). [District Rule 2201]
3. Prior to initial operation of S-7616-1 through -7 and -9 through -13, permittee shall provide PM10 emission reduction credits for the following quantity of emissions: 1st quarter: 48,489 lb, 2nd quarter: 48,489 lb, 3rd quarter: 48,489 lb, and 4th quarter: 48,489 lb. Offsets shall be provided at the applicable offset ratio specified in Table 4-2 of Rule 2201 (as amended 9/21/06). SOx ERCs may be used to offset PM10 increases at an interpollutant ratio of 1.0 lb-SOx: 1.0 lb-PM10. [District Rule 2201]
4. Prior to initial operation of S-7616-2, -3, -5, -6, -7, -9, and -13, permittee shall provide SOx emission reduction credits for the following quantity of emissions: 1st quarter: 5,315 lb, 2nd quarter: 5,315 lb, 3rd quarter: 5,315 lb, and 4th quarter: 5,315 lb. Offsets shall be provided at the applicable offset ratio specified in Table 4-2 of Rule 2201 (as amended 9/21/06). [District Rule 2201]

CONDITIONS CONTINUE ON NEXT PAGE

YOU MUST NOTIFY THE DISTRICT COMPLIANCE DIVISION AT (661) 392-5500 WHEN CONSTRUCTION IS COMPLETED AND PRIOR TO OPERATING THE EQUIPMENT OR MODIFICATIONS AUTHORIZED BY THIS AUTHORITY TO CONSTRUCT. This is NOT a PERMIT TO OPERATE. Approval or denial of a PERMIT TO OPERATE will be made after an inspection to verify that the equipment has been constructed in accordance with the approved plans, specifications and conditions of this Authority to Construct, and to determine if the equipment can be operated in compliance with all Rules and Regulations of the San Joaquin Valley Unified Air Pollution Control District. Unless construction has commenced pursuant to Rule 2050, this Authority to Construct shall expire and application shall be cancelled two years from the date of issuance. The applicant is responsible for complying with all laws, ordinances and regulations of all other governmental agencies which may pertain to the above equipment.

Seyed Sadredin, Executive Director / APCO

DRAFT

DAVID WARNER, Director of Permit Services
S-7616-6-0 : Jun 16 2010 2:07PM -- RAMIREZH : Joint Inspection NOT Required

5. Prior to initial operation of S-7616-2, -3, -5 through -9, and -13, permittee shall provide VOC emission reduction credits for the following quantity of emissions: 1st quarter: 31,817 lb, 2nd quarter: 31,817 lb, 3rd quarter: 31,817 lb, and 4th quarter: 31,817 lb. Offsets shall be provided at the applicable offset ratio specified in Table 4-2 of Rule 2201 (as amended 9/21/06). [District Rule 2201]
6. ERC certificate numbers C-1058-2, C-1058-5, C-1059-2, S-3275-5, S-3273-2, S-3305-1, and/or S-3306-1 (or a certificate split from these certificates) shall be used to supply the required offsets, unless a revised offsetting proposal is received and approved by the District, upon which this Authority to Construct shall be reissued, administratively specifying the new offsetting proposal. Original public noticing requirements, if any, shall be duplicated prior to reissuance of this Demonstration of Compliance. [District Rule 2201]
7. Permittee shall submit an application to comply with Rule 2520 - Federally Mandated Operating Permits within twelve months of commencing operation. [District Rule 2520]
8. Permittee shall submit an application to comply with Rule 2540 - Acid Rain Program within twelve months of commencing operation. [District Rule 2540]
9. {98} No air contaminant shall be released into the atmosphere which causes a public nuisance. [District Rule 4102]
10. Flare shall be equipped with flare gas volume flowmeter. [District Rule 2201]
11. Total flaring shall be limited to 40 hr/yr. [District Rule 2201]
12. Emissions from the flare shall not exceed any of the following (based on total gas combusted): PM10: 0.03 lb/MMBtu; NOx (as NO2): 0.12 lb/MMBtu; VOC: 0.0013 lb/MMBtu; or CO: 0.08 lb/MMBtu. [District Rule 2201]
13. SOx emissions (as SO2) shall not exceed 18.4 lb/hr. [District Rule 2201]
14. No air contaminant shall be discharged into the atmosphere for a period or periods aggregating more than five minutes in any two hours which is as dark as, or darker than, Ringelmann 1/4 or 5% opacity. [District Rule 4101 and 40 CFR 60.18]
15. A trained observer, as defined in EPA Method 22, shall check visible emissions at least once annually for a period of 15 minutes. If visible emissions are detected at any time during this period, the observation period shall be extended to two hours. A record containing the results of these observations shall be maintained, which also includes company name, process unit, observer's name and affiliation, date, estimated wind speed and direction, sky condition, and the observer's location relative to the source and sun. [District Rule 4311]
16. Flare pilot shall be fired solely on PUC quality natural gas. [District Rule 2201]
17. A flame shall be present at all times when combustible gases are vented through this flare. [District Rules 2201 and 4311, 5.2]
18. This flare shall be equipped with an automatic ignition system. [District Rules 2201 and 4311, 5.3]
19. A flame sensing or heat sensing device such as a thermocouple, ultraviolet beam sensor, infrared sensor, or an equivalent device, capable of continuously detecting at least one pilot flame or the flare flame is present shall be operational. [District Rule 4311, 5.4]
20. Flare gas pressure shall not be less than 5 psig when incinerating combustible gasses. [District Rule 4311, 5.6]
21. 90 days prior to installation of the flare, permittee shall submit a flare minimization plan (FMP) that complies with the requirements of Rule 4311 Section 6.5 to the APCO for approval. [District Rule 4311, 6.5]
22. Copies of approved flare minimization plan pursuant to Rule 4311 Section 6.5 shall be made readily available to the APCO, ARB, and EPA upon request for a minimum of 5 years. [District Rule 4311, 6.1]
23. Copies of compliance determination pursuant to 40 CFR 60.18 shall be made readily available to the APCO, ARB, and EPA upon request for a minimum of 5 years. [District Rule 4311, 6.1]
24. Copies of monitoring data collected pursuant to Rule 4311 Section 5.10 shall be made readily available to the APCO, ARB, and EPA upon request for a minimum of 5 years. [District Rule 4311, 6.1]

DRAFT

CONDITIONS CONTINUE ON NEXT PAGE

25. Effective on and after July 1, 2011, the operator shall notify the APCO of an unplanned flaring event within 24 hours after the start of the next business day or within 24 hours of their discovery, which ever occurs first. The notification shall include the flare source identification, the start date and time, and the end date and time. [District Rule 4311, 6.2]

26. Effective on and after July 1, 2012, and annually thereafter, the operator of a flare subject to flare minimization plans pursuant to Section 5.8 shall submit an annual report to the APCO that summarizes all Reportable Flaring Events as defined in Rule 4311 Section 3.0 that occurred during the previous 12 month period. The report shall be submitted within 30 days following the end of the twelve month period of the previous year. [District Rule 4311, 6.2]

27. Effective on and after July 1, 2012, and annually thereafter, the operator of a flare subject to flare monitoring requirements pursuant to Sections 5.10, 6.6, 6.7, 6.8, 6.9, and 6.10, as appropriate, shall submit an annual report to the APCO as specified in Rule 4311 Section 6.2.3 within 30 days following the end of each 12 month period. [District Rule 4311, 6.2]

28. The operator shall submit a flare minimization plan (FMP) as specified in Rule 4311 Section 6.5 to the APCO for approval. [District Rule 4311, 6.5]

29. Flare shall be operated with a flame present at all times, and kept in operation when emissions may be vented to it. The presence of a flare pilot flame shall be monitored using a thermocouple or any other equivalent device to detect the presence of a flame. [District Rule 4001, 4311]

30. The flame shall be present at all times when combustible gases are vented through the flare. [District Rule 4311, 5.2 and 40CFR 60.18(c)(2)]

31. 90 days prior to installation, the applicant shall demonstrate to the District how compliance with 40 CFR 60.16 (c)(3) shall be satisfied. Compliance with either subparts (c)(3)(i), or (c)(3)(ii) and (c)(4) shall be demonstrated to the District. [40 CFR 60.18 (c)(3)]

32. If the permittee opts to comply with 40 CFR 60.16 (c)(3)(i), a non-assisted flare shall have a diameter of 3 inches or greater, have a minimum hydrogen content of 8.0% by volume, and be designed for and operated with an exit velocity less than 122 ft/sec and less than the velocity Vmax, as determined by the equation specified in paragraph 40 CFR 60.18 (c)(3)(i)(A). [40 CFR 60.18]

33. If the permittee opts to comply with 40 CFR 60.16 (c)(3)(ii) and (c)(4), the heating value of the gas combusted in the flare shall be at least 200 Btu/scf. [District Rule 4311 and 40 CFR 60.18]

34. If the permittee opts to comply with 40 CFR 60.16 (c)(3)(ii) and (c)(4), non-assisted flares may be operated with an exit velocity equal to or greater than 60 ft/sec, but less than 400 ft/sec, if the net heating value of the gas being combusted is greater than 1,000 Btu/scf. [40 CFR 60.18]

35. If the permittee opts to comply with 40 CFR 60.16 (c)(3)(ii) and (c)(4), non-assisted flares shall be operated with an exit velocity less than 60 ft/sec, except as provided in 40 CFR 60.18 (c)(4)(ii) and (iii). [40 CFR 60.18]

36. If the permittee opts to comply with 40 CFR 60.16 (c)(3)(ii) and (c)(4), non-assisted flares may be operated with an exit velocity less than the velocity Vmax, as determined by the methods specified in 40 CFR 60.18 (f)(5), and less than 400 ft/sec. [40 CFR 60.18]

37. The net heating value of the gas being combusted the flare shall be calculated pursuant to 40 CFR 60.18(f)(3) or by using EPA Method 18, ASTM D1946, and ASTM D2382 if published values are not available or cannot be calculated. [40 CFR 60.18]

38. The flare shall be inspected during operation for visible emissions, using EPA Method 22. If visible emissions are observed, corrective action shall be taken. If visible emissions cannot be eliminated, an EPA Method 9 test shall be conducted within 72 hours. [District Rule 2201 and 40 CFR 60.18]

39. The outlet shall be equipped with an automatic ignition system, or, shall operate with a pilot flame present at all times when combustible gases are vented through the flare, except during purge periods for automatic-ignition equipped flares. [District Rule 4311, 5.3 and 40CFR 60.18]

40. Except for flares equipped with a flow-sensing ignition system, a heat sensing device such as a thermocouple, ultraviolet beam sensor, infrared sensor, or an equivalent device, capable of continuously detecting at least one pilot flame or the flare flame is present shall be installed and operated. [District Rule 4311, 5.4 and 40CFR 60.18]

DRAFT

CONDITIONS CONTINUE ON NEXT PAGE

41. The actual exit velocity of a flare shall be determined by dividing the volumetric flowrate (in units of standard temperature and pressure), as determined by Reference Methods 2, 2A, 2C, or 2D as appropriate; by the unobstructed (free) cross sectional area of the flare tip. [40 CFR 60.18]

42. Upon request, operator shall make available to the APCO the compliance determination records that demonstrate compliance with the provisions of 40 CFR 60.18. [District Rule 4311, 6.1]

43. Semi-annual reports of all periods without the presence of a flare pilot flame shall be furnished to the District Compliance Division and EPA. [District Rule 4001 and 40CFR 60:115b(d)(3)]

44. The permittee shall keep accurate daily records of the amount of gas combusted in the flare, hours of operation, the sulfur content and heat content of the gas combusted, and records demonstrating compliance with the provisions of 40 CFR 60.18, (c)(3) through (c)(5). The permittee shall keep these records for a period of at least five years and shall make such records available for District inspection upon request. [District Rules 2201 and 4311]

45. {3246} All records shall be maintained and retained on-site for a period of at least 5 years and shall be made available for District inspection upon request. [District Rule 1070]

46. {3433} Disturbances of soil related to any construction, demolition, excavation, extraction, or other earthmoving activities shall comply with the requirements for fugitive dust control in District Rule 8021 unless specifically exempted under Section 4.0 of Rule 8021 or Rule 8011. [District Rules 8011 and 8021]

47. {3434} An owner/operator shall submit a Dust Control Plan to the APCO prior to the start of any construction activity on any site that will include 10 acres or more of disturbed surface area for residential developments, or 5 acres or more of disturbed surface area for non-residential development, or will include moving, depositing, or relocating more than 2,500 cubic yards per day of bulk materials on at least three days. [District Rules 8011 and 8021]

48. {3435} An owner/operator shall prevent or cleanup any carryout or trackout in accordance with the requirements of District Rule 8041 Section 5.0, unless specifically exempted under Section 4.0 of Rule 8041 (8/19/04) or Rule 8011(8/19/04). [District Rules 8011 and 8021]

49. {3436} Whenever open areas are disturbed, or vehicles are used in open areas, the facility shall comply with the requirements of Section 5.0 of District Rule 8051, unless specifically exempted under Section 4.0 of Rule 8051 or Rule 8011. [District Rules 8011 and 8051]

50. {3437} Any paved road or unpaved road shall comply with the requirements of District Rule 8061 unless specifically exempted under Section 4.0 of Rule 8061 or Rule 8011. [District Rules 8011 and 8061]

51. {3438} Water, gravel, roadmix, or chemical/organic dust stabilizers/suppressants, vegetative materials, or other District-approved control measure shall be applied to unpaved vehicle travel areas as required to limit Visible Dust Emissions to 20% opacity and comply with the requirements for a stabilized unpaved road as defined in Section 3.59 of District Rule 8011. [District Rule 8011 and 8071]

52. {3439} Where dusting materials are allowed to accumulate on paved surfaces, the accumulation shall be removed daily or water and/or chemical/organic dust stabilizers/suppressants shall be applied to the paved surface as required to maintain continuous compliance with the requirements for a stabilized unpaved road as defined in Section 3.59 of District Rule 8011 and limit Visible Dust Emissions (VDE) to 20% opacity. [District Rule 8011 and 8071]

53. {3440} On each day that 50 or more Vehicle Daily Trips or 25 or more Vehicle Daily Trips with 3 axles or more will occur on an unpaved vehicle/equipment traffic area, permittee shall apply water, gravel, roadmix, or chemical/organic dust stabilizers/suppressants, vegetative materials, or other District-approved control measure as required to limit Visible Dust Emissions to 20% opacity and comply with the requirements for a stabilized unpaved road as defined in Section 3.59 of District Rule 8011. [District Rule 8011 and 8071]

54. {3441} Whenever any portion of the site becomes inactive, Permittee shall restrict access and periodically stabilize any disturbed surface to comply with the conditions for a stabilized surface as defined in Section 3.58 of District Rule 8011. [District Rules 8011 and 8071]

DRAFT

CONDITIONS CONTINUE ON NEXT PAGE

55. {3442} Records and other supporting documentation shall be maintained as required to demonstrate compliance with the requirements of the rules under Regulation VIII only for those days that a control measure was implemented. Such records shall include the type of control measure(s) used, the location and extent of coverage, and the date, amount, and frequency of application of dust suppressant, manufacturer's dust suppressant product information sheet that identifies the name of the dust suppressant and application instructions. Records shall be kept for one year following project completion that results in the termination of all dust generating activities. [District Rules 8011, 8031, and 8071]

DRAFT

San Joaquin Valley
Air Pollution Control District

AUTHORITY TO CONSTRUCT

DRAFT

PERMIT NO: S-7616-7-0 **ISSUANCE DATE:** DRAFT

LEGAL OWNER OR OPERATOR: HYDROGEN ENERGY CALIFORNIA, LLC
MAILING ADDRESS: ONE WORLD TRADE CENTER
SUITE 1600
LONG BEACH, CA 90831-1600

LOCATION: SEC 10 T30S R 24E
TUPMAN, CA

EQUIPMENT DESCRIPTION:
150 MMBTU/HR EMERGENCY ELEVATED FLARE WITH 0.3 MMBTU/HR NATURAL GAS-FIRED PILOT PRIMARILY SERVING RECTISOL ACID GAS REMOVAL UNIT

CONDITIONS

1. The permittee shall enter into an Air Quality Mitigation Settlement Agreement with the District prior to issuance of the Final Determination of Compliance, or such other time that is mutually agreeable.
2. Prior to initial operation of S-7616-2, -3, -5, -6, -7, -9, and -13, permittee shall provide NOx emission reduction credits for the following quantity of emissions: 1st quarter: 92,319 lb, 2nd quarter: 92,319 lb, 3rd quarter: 92,319 lb, and 4th quarter: 92,319 lb. Offsets shall be provided at the applicable offset ratio specified in Table 4-2 of Rule 2201 (as amended 9/21/06). [District Rule 2201]
3. Prior to initial operation of S-7616-1 through -7 and -9 through -13, permittee shall provide PM10 emission reduction credits for the following quantity of emissions: 1st quarter: 48,489 lb, 2nd quarter: 48,489 lb, 3rd quarter: 48,489 lb, and 4th quarter: 48,489 lb. Offsets shall be provided at the applicable offset ratio specified in Table 4-2 of Rule 2201 (as amended 9/21/06). SOx ERCs may be used to offset PM10 increases at an interpollutant ratio of 1.0 lb-SOx: 1.0 lb-PM10. [District Rule 2201]
4. Prior to initial operation of S-7616-2, -3, -5, -6, -7, -9, and -13, permittee shall provide SOx emission reduction credits for the following quantity of emissions: 1st quarter: 5,315 lb, 2nd quarter: 5,315 lb, 3rd quarter: 5,315 lb, and 4th quarter: 5,315 lb. Offsets shall be provided at the applicable offset ratio specified in Table 4-2 of Rule 2201 (as amended 9/21/06). [District Rule 2201]

CONDITIONS CONTINUE ON NEXT PAGE

YOU MUST NOTIFY THE DISTRICT COMPLIANCE DIVISION AT (661) 392-5500 WHEN CONSTRUCTION IS COMPLETED AND PRIOR TO OPERATING THE EQUIPMENT OR MODIFICATIONS AUTHORIZED BY THIS AUTHORITY TO CONSTRUCT. This is NOT a PERMIT TO OPERATE. Approval or denial of a PERMIT TO OPERATE will be made after an inspection to verify that the equipment has been constructed in accordance with the approved plans, specifications and conditions of this Authority to Construct, and to determine if the equipment can be operated in compliance with all Rules and Regulations of the San Joaquin Valley Unified Air Pollution Control District. Unless construction has commenced pursuant to Rule 2050, this Authority to Construct shall expire and application shall be cancelled two years from the date of issuance. The applicant is responsible for complying with all laws, ordinances and regulations of all other governmental agencies which may pertain to the above equipment.

Seyed Sadredin, Executive Director / APCO

DRAFT

DAVID WARNER, Director of Permit Services
S-7616-7-0 : Jun 16 2010 2:07PM – RAMIREZH : Joint Inspection NOT Required

5. Prior to initial operation of S-7616-2, -3, -5 through -9, and -13, permittee shall provide VOC emission reduction credits for the following quantity of emissions: 1st quarter: 31,817 lb, 2nd quarter: 31,817 lb, 3rd quarter: 31,817 lb, and 4th quarter: 31,817 lb. Offsets shall be provided at the applicable offset ratio specified in Table 4-2 of Rule 2201 (as amended 9/21/06). [District Rule 2201]
6. ERC certificate numbers C-1058-2, C-1058-5, C-1059-2, S-3275-5, S-3273-2, S-3305-1, and/or S-3306-1 (or a certificate split from these certificates) shall be used to supply the required offsets, unless a revised offsetting proposal is received and approved by the District, upon which this Authority to Construct shall be reissued, administratively specifying the new offsetting proposal. Original public noticing requirements, if any, shall be duplicated prior to reissuance of this Demonstration of Compliance. [District Rule 2201]
7. Permittee shall submit an application to comply with Rule 2520 - Federally Mandated Operating Permits within twelve months of commencing operation. [District Rule 2520]
8. Permittee shall submit an application to comply with Rule 2540 - Acid Rain Program within twelve months of commencing operation. [District Rule 2540]
9. Flare pilot shall be fired solely on PUC quality natural gas. [District Rule 2201]
10. This flare shall be operated solely for emergency situations. [District Rule 2201]
11. Emissions from the flare pilot shall not exceed any of the following: PM10: 0.03 lb/MMBtu; NOx (as NO2): 0.12 lb/MMBtu; VOC: 0.0013 lb/MMBtu; or CO: 0.08 lb/MMBtu. [District Rule 2201]
12. A non-resettable, totalizing mass or volumetric fuel flow meter to measure the amount of gas combusted in the unit shall be installed, utilized and maintained. [District Rule 2201]
13. A flame shall be present at all times when combustible gases are vented through this flare. [District Rule 2201 and 4311, 5.2]
14. This flare shall be equipped with an automatic ignition system. [District Rule 2201 and 4311, 5.3]
15. A flame sensing or heat sensing device such as a thermocouple, ultraviolet beam sensor, infrared sensor, or an equivalent device, capable of continuously detecting at least one pilot flame or the flare flame is present shall be operational. [District Rule 4311, 5.4]
16. 90 days prior to installation of the flare, permittee shall submit a flare minimization plan (FMP) that complies with the requirements of Rule 4311 Section 6.5 to the APCO for approval. [District Rule 4311, 6.5]
17. Records of the duration of flare operation, amount of gas burned, and the nature of the emergency situation for flare used during an emergency situation shall be made readily available to the APCO, ARB, and EPA upon request for a minimum of 5 years. [District Rule 4311, 6.1]
18. Copies of approved flare minimization plan pursuant to Rule 4311 Section 6.5 shall be made readily available to the APCO, ARB, and EPA upon request for a minimum of 5 years. [District Rule 4311, 6.1]
19. Copies of compliance determination pursuant to 40 CFR 60.18 shall be made readily available to the APCO, ARB, and EPA upon request for a minimum of 5 years. [District Rule 4311, 6.1]
20. Copies of monitoring data collected pursuant to Rule 4311 Section 5.10 shall be made readily available to the APCO, ARB, and EPA upon request for a minimum of 5 years. [District Rule 4311, 6.1]
21. Effective on and after July 1, 2011, the operator shall notify the APCO of an unplanned flaring event within 24 hours after the start of the next business day or within 24 hours of their discovery, which ever occurs first. The notification shall include the flare source identification, the start date and time, and the end date and time. [District Rule 4311, 6.2]
22. Effective on and after July 1, 2012, and annually thereafter, the operator of a flare subject to flare minimization plans pursuant to Section 5.8 shall submit an annual report to the APCO that summarizes all Reportable Flaring Events as defined in Rule 4311 Section 3.0 that occurred during the previous 12 month period. The report shall be submitted within 30 days following the end of the twelve month period of the previous year. [District Rule 4311, 6.2]

DRAFT

CONDITIONS CONTINUE ON NEXT PAGE

23. Effective on and after July 1, 2012, and annually thereafter, the operator of a flare subject to flare monitoring requirements pursuant to Sections 5.10, 6.6, 6.7, 6.8, 6.9, and 6.10, as appropriate, shall submit an annual report to the APCO as specified in Rule 4311 Section 6.2.3 within 30 days following the end of each 12 month period. [District Rule 4311, 6.2]

24. The operator shall submit a flare minimization plan (FMP) as specified in Rule 4311 Section 6.5 to the APCO for approval. [District Rule 4311, 6.5]

25. The owner or operator shall notify the District of any emergency use of the flare within one hour after confirmation that an actual flaring event has occurred, unless the owner or operator demonstrates to the District's satisfaction that a longer notification period was necessary. However, in the event that confirmation of an actual flaring event cannot be made, then the owner or operator shall notify the District no more than 3 hours after an alarm indicates that a flaring event may have occurred, unless the owner or operator demonstrates to the District's satisfaction that a longer notification period was necessary. [District Rule 1070]

26. The permittee shall report to the District in writing within ten days following the emergency use of the flare. The report shall include 1) a statement that the failure or malfunction has been corrected, the date corrected, and proof of correction; 2) a specific statement of the reason or cause for the occurrence; 3) a description of the corrective measures undertaken and/or to be undertaken to avoid such an occurrence in the future; and 4) an estimate of the emissions caused by the emergency use, specifically including duration of flare operation and amount of gas burned. [District Rules 1070 and 4311]

27. {3246} All records shall be maintained and retained on-site for a period of at least 5 years and shall be made available for District inspection upon request. [District Rule 1070]

28. {3433} Disturbances of soil related to any construction, demolition, excavation, extraction, or other earthmoving activities shall comply with the requirements for fugitive dust control in District Rule 8021 unless specifically exempted under Section 4.0 of Rule 8021 or Rule 8011. [District Rules 8011 and 8021]

29. {3434} An owner/operator shall submit a Dust Control Plan to the APCO prior to the start of any construction activity on any site that will include 10 acres or more of disturbed surface area for residential developments, or 5 acres or more of disturbed surface area for non-residential development, or will include moving, depositing, or relocating more than 2,500 cubic yards per day of bulk materials on at least three days. [District Rules 8011 and 8021]

30. {3435} An owner/operator shall prevent or cleanup any carryout or trackout in accordance with the requirements of District Rule 8041 Section 5.0, unless specifically exempted under Section 4.0 of Rule 8041 (8/19/04) or Rule 8011(8/19/04). [District Rules 8011 and 8021]

31. {3436} Whenever open areas are disturbed, or vehicles are used in open areas, the facility shall comply with the requirements of Section 5.0 of District Rule 8051, unless specifically exempted under Section 4.0 of Rule 8051 or Rule 8011. [District Rules 8011 and 8051]

32. {3437} Any paved road or unpaved road shall comply with the requirements of District Rule 8061 unless specifically exempted under Section 4.0 of Rule 8061 or Rule 8011. [District Rules 8011 and 8061]

33. {3438} Water, gravel, roadmix, or chemical/organic dust stabilizers/suppressants, vegetative materials, or other District-approved control measure shall be applied to unpaved vehicle travel areas as required to limit Visible Dust Emissions to 20% opacity and comply with the requirements for a stabilized unpaved road as defined in Section 3.59 of District Rule 8011. [District Rule 8011 and 8071]

34. {3439} Where dusting materials are allowed to accumulate on paved surfaces, the accumulation shall be removed daily or water and/or chemical/organic dust stabilizers/suppressants shall be applied to the paved surface as required to maintain continuous compliance with the requirements for a stabilized unpaved road as defined in Section 3.59 of District Rule 8011 and limit Visible Dust Emissions (VDE) to 20% opacity. [District Rule 8011 and 8071]

35. {3440} On each day that 50 or more Vehicle Daily Trips or 25 or more Vehicle Daily Trips with 3 axles or more will occur on an unpaved vehicle/equipment traffic area, permittee shall apply water, gravel, roadmix, or chemical/organic dust stabilizers/suppressants, vegetative materials, or other District-approved control measure as required to limit Visible Dust Emissions to 20% opacity and comply with the requirements for a stabilized unpaved road as defined in Section 3.59 of District Rule 8011. [District Rule 8011 and 8071]

DRAFT

CONDITIONS CONTINUE ON NEXT PAGE

36. {3441} Whenever any portion of the site becomes inactive, Permittee shall restrict access and periodically stabilize any disturbed surface to comply with the conditions for a stabilized surface as defined in Section 3.58 of District Rule 8011. [District Rules 8011 and 8071]

37. {3442} Records and other supporting documentation shall be maintained as required to demonstrate compliance with the requirements of the rules under Regulation VIII only for those days that a control measure was implemented. Such records shall include the type of control measure(s) used, the location and extent of coverage, and the date, amount, and frequency of application of dust suppressant, manufacturer's dust suppressant product information sheet that identifies the name of the dust suppressant and application instructions. Records shall be kept for one year following project completion that results in the termination of all dust generating activities. [District Rules 8011, 8031, and 8071]

DRAFT

San Joaquin Valley
Air Pollution Control District

AUTHORITY TO CONSTRUCT

DRAFT

PERMIT NO: S-7616-8-0 **ISSUANCE DATE:** DRAFT

LEGAL OWNER OR OPERATOR: HYDROGEN ENERGY CALIFORNIA, LLC
MAILING ADDRESS: ONE WORLD TRADE CENTER
SUITE 1600
LONG BEACH, CA 90831-1600

LOCATION: SEC 10 T30S R 24E
TUPMAN, CA

EQUIPMENT DESCRIPTION:
CO2 RECOVERY (CAPTURE, COMPRESSION, AND TRANSPORTATION) AND VENT SYSTEM, SERVING RELEASE A STREAM CONSISTING OF CO2 AND OTHER POLLUTANTS FROM THE ACID GAS REMOVAL UNIT AND TAIL GAS TREATMENT UNIT

CONDITIONS

1. The permittee shall enter into an Air Quality Mitigation Settlement Agreement with the District prior to issuance of the Final Determination of Compliance, or such other time that is mutually agreeable.
2. Prior to initial operation of S-7616-2, -3, -5 through -9, and -13, permittee shall provide VOC emission reduction credits for the following quantity of emissions: 1st quarter: 31,817 lb, 2nd quarter: 31,817 lb, 3rd quarter: 31,817 lb, and 4th quarter: 31,817 lb. Offsets shall be provided at the applicable offset ratio specified in Table 4-2 of Rule 2201 (as amended 9/21/06). [District Rule 2201]
3. ERC certificate numbers C-1058-2, C-1058-5, C-1059-2, S-3275-5, S-3273-2, S-3305-1, and/or S-3306-1 (or a certificate split from these certificates) shall be used to supply the required offsets, unless a revised offsetting proposal is received and approved by the District, upon which this Authority to Construct shall be reissued, administratively specifying the new offsetting proposal. Original public noticing requirements, if any, shall be duplicated prior to reissuance of this Demonstration of Compliance. [District Rule 2201]
4. Permittee shall submit an application to comply with Rule 2520 - Federally Mandated Operating Permits within twelve months of commencing operation. [District Rule 2520]
5. Permittee shall submit an application to comply with Rule 2540 - Acid Rain Program within twelve months of commencing operation. [District Rule 2540]

CONDITIONS CONTINUE ON NEXT PAGE

YOU MUST NOTIFY THE DISTRICT COMPLIANCE DIVISION AT (661) 392-5500 WHEN CONSTRUCTION IS COMPLETED AND PRIOR TO OPERATING THE EQUIPMENT OR MODIFICATIONS AUTHORIZED BY THIS AUTHORITY TO CONSTRUCT. This is NOT a PERMIT TO OPERATE. Approval or denial of a PERMIT TO OPERATE will be made after an inspection to verify that the equipment has been constructed in accordance with the approved plans, specifications and conditions of this Authority to Construct, and to determine if the equipment can be operated in compliance with all Rules and Regulations of the San Joaquin Valley Unified Air Pollution Control District. Unless construction has commenced pursuant to Rule 2050, this Authority to Construct shall expire and application shall be cancelled two years from the date of issuance. The applicant is responsible for complying with all laws, ordinances and regulations of all other governmental agencies which may pertain to the above equipment.

Seyed Sadredin, Executive Director / APCO

DRAFT

DAVID WARNER, Director of Permit Services
S-7616-8-0 : Jun 16 2010 2:07PM – RAMIREZH : Joint Inspection NOT Required

6. Maximum flowrate of vent stream shall not exceed 656,000 lb/hr. [District Rule 2201]
7. Venting shall only be allowed when transportation system is unavailable due to upset conditions, and such conditions shall not exceed 504 hours per rolling 12-month period. [District Rule 2201]
8. Vent stream concentration shall not exceed 1,000 ppm-CO, 40 ppm-VOC, nor 10 ppm-H2S. [District Rule 2201]
9. Emission rates from the vent stream shall not exceed 232.7 lb-VOC/day nor 10,180.8 lb-CO/day. [District Rule 2201]
10. Vent system shall be equipped with a gas flowmeter. [District Rule]
11. Permittee shall maintain records of venting events including hourly flowrate of vent stream and reasons for venting event. [District Rule 2201]
12. Permittee shall monitor the CO, VOC, and H2S vent gas composition [District Rule 2201]
13. Period of venting shall be reported to the District by the following working day, including the duration of the venting event and the vent gas composition observed. [District Rule 2201]
14. {3433} Disturbances of soil related to any construction, demolition, excavation, extraction, or other earthmoving activities shall comply with the requirements for fugitive dust control in District Rule 8021 unless specifically exempted under Section 4.0 of Rule 8021 or Rule 8011. [District Rules 8011 and 8021]
15. {3434} An owner/operator shall submit a Dust Control Plan to the APCO prior to the start of any construction activity on any site that will include 10 acres or more of disturbed surface area for residential developments, or 5 acres or more of disturbed surface area for non-residential development, or will include moving, depositing, or relocating more than 2,500 cubic yards per day of bulk materials on at least three days. [District Rules 8011 and 8021]
16. {3435} An owner/operator shall prevent or cleanup any carryout or trackout in accordance with the requirements of District Rule 8041 Section 5.0, unless specifically exempted under Section 4.0 of Rule 8041 (8/19/04) or Rule 8011(8/19/04). [District Rules 8011 and 8021]
17. {3436} Whenever open areas are disturbed, or vehicles are used in open areas, the facility shall comply with the requirements of Section 5.0 of District Rule 8051, unless specifically exempted under Section 4.0 of Rule 8051 or Rule 8011. [District Rules 8011 and 8051]
18. {3437} Any paved road or unpaved road shall comply with the requirements of District Rule 8061 unless specifically exempted under Section 4.0 of Rule 8061 or Rule 8011. [District Rules 8011 and 8061]
19. {3438} Water, gravel, roadmix, or chemical/organic dust stabilizers/suppressants, vegetative materials, or other District-approved control measure shall be applied to unpaved vehicle travel areas as required to limit Visible Dust Emissions to 20% opacity and comply with the requirements for a stabilized unpaved road as defined in Section 3.59 of District Rule 8011. [District Rule 8011 and 8071]
20. {3439} Where dusting materials are allowed to accumulate on paved surfaces, the accumulation shall be removed daily or water and/or chemical/organic dust stabilizers/suppressants shall be applied to the paved surface as required to maintain continuous compliance with the requirements for a stabilized unpaved road as defined in Section 3.59 of District Rule 8011 and limit Visible Dust Emissions (VDE) to 20% opacity. [District Rule 8011 and 8071]
21. {3440} On each day that 50 or more Vehicle Daily Trips or 25 or more Vehicle Daily Trips with 3 axles or more will occur on an unpaved vehicle/equipment traffic area, permittee shall apply water, gravel, roadmix, or chemical/organic dust stabilizers/suppressants, vegetative materials, or other District-approved control measure as required to limit Visible Dust Emissions to 20% opacity and comply with the requirements for a stabilized unpaved road as defined in Section 3.59 of District Rule 8011. [District Rule 8011 and 8071]
22. {3441} Whenever any portion of the site becomes inactive, Permittee shall restrict access and periodically stabilize any disturbed surface to comply with the conditions for a stabilized surface as defined in Section 3.58 of District Rule 8011. [District Rules 8011 and 8071]

DRAFT

CONDITIONS CONTINUE ON NEXT PAGE

23. {3442} Records and other supporting documentation shall be maintained as required to demonstrate compliance with the requirements of the rules under Regulation VIII only for those days that a control measure was implemented. Such records shall include the type of control measure(s) used, the location and extent of coverage, and the date, amount, and frequency of application of dust suppressant, manufacturer's dust suppressant product information sheet that identifies the name of the dust suppressant and application instructions. Records shall be kept for one year following project completion that results in the termination of all dust generating activities. [District Rules 8011, 8031, and 8071]

DRAFT

San Joaquin Valley
Air Pollution Control District

AUTHORITY TO CONSTRUCT

DRAFT

PERMIT NO: S-7616-9-0 **ISSUANCE DATE:** DRAFT

LEGAL OWNER OR OPERATOR: HYDROGEN ENERGY CALIFORNIA, LLC
MAILING ADDRESS: ONE WORLD TRADE CENTER
SUITE 1600
LONG BEACH, CA 90831-1600

LOCATION: SEC 10 T30S R 24E
TUPMAN, CA

EQUIPMENT DESCRIPTION:
349 MW (GROSS) COMBINED-CYCLE POWER GENERATING SYSTEM CONSISTING OF HYDROGEN-RICH SYNGAS FUEL AND/OR NATURAL GAS-FIRED GE PG7321 (FB) COMBINED-CYCLE COMBUSTION TURBINE GENERATOR (CTG) WITH A HEAT RECOVERY STEAM GENERATOR (HRSG) WHICH INCLUDES A DUCT BURNER, SELECTIVE CATALYTIC REDUCTION (SCR) SYSTEM, CARBON MONOXIDE CATALYST SYSTEM; AND A CONDENSING STEAM TURBINE-GENERATOR (STG) OPERATING IN COMBINED CYCLE MODE

CONDITIONS

1. The permittee shall enter into an Air Quality Mitigation Settlement Agreement with the District prior to issuance of the Final Determination of Compliance, or such other time that is mutually agreeable.
2. Prior to initial operation of S-7616-2, -3, -5, -6, -7, -9, and -13, permittee shall provide NOx emission reduction credits for the following quantity of emissions: 1st quarter: 92,319 lb, 2nd quarter: 92,319 lb, 3rd quarter: 92,319 lb, and 4th quarter: 92,319 lb. Offsets shall be provided at the applicable offset ratio specified in Table 4-2 of Rule 2201 (as amended 9/21/06). [District Rule 2201]
3. Prior to initial operation of S-7616-1 through -7 and -9 through -13, permittee shall provide PM10 emission reduction credits for the following quantity of emissions: 1st quarter: 48,489 lb, 2nd quarter: 48,489 lb, 3rd quarter: 48,489 lb, and 4th quarter: 48,489 lb. Offsets shall be provided at the applicable offset ratio specified in Table 4-2 of Rule 2201 (as amended 9/21/06). SOx ERCs may be used to offset PM10 increases at an interpollutant ratio of 1.0 lb-SOx: 1.0 lb-PM10. [District Rule 2201]

CONDITIONS CONTINUE ON NEXT PAGE

YOU MUST NOTIFY THE DISTRICT COMPLIANCE DIVISION AT (661) 392-5500 WHEN CONSTRUCTION IS COMPLETED AND PRIOR TO OPERATING THE EQUIPMENT OR MODIFICATIONS AUTHORIZED BY THIS AUTHORITY TO CONSTRUCT. This is NOT a PERMIT TO OPERATE. Approval or denial of a PERMIT TO OPERATE will be made after an inspection to verify that the equipment has been constructed in accordance with the approved plans, specifications and conditions of this Authority to Construct, and to determine if the equipment can be operated in compliance with all Rules and Regulations of the San Joaquin Valley Unified Air Pollution Control District. Unless construction has commenced pursuant to Rule 2050, this Authority to Construct shall expire and application shall be cancelled two years from the date of issuance. The applicant is responsible for complying with all laws, ordinances and regulations of all other governmental agencies which may pertain to the above equipment.

Seyed Sadredin, Executive Director / APCO

DRAFT

DAVID WARNER, Director of Permit Services
S-7616-9-0 : Jun 16 2010 2:07PM – RAMIREZH : Joint Inspection NOT Required

4. Prior to initial operation of S-7616-2, -3, -5, -6, -7, -9, and -13, permittee shall provide SOx emission reduction credits for the following quantity of emissions: 1st quarter: 5,315 lb, 2nd quarter: 5,315 lb, 3rd quarter: 5,315 lb, and 4th quarter: 5,315 lb. Offsets shall be provided at the applicable offset ratio specified in Table 4-2 of Rule 2201 (as amended 9/21/06). [District Rule 2201]

5. Prior to initial operation of S-7616-2, -3, -5 through -9, and -13, permittee shall provide VOC emission reduction credits for the following quantity of emissions: 1st quarter: 31,817 lb, 2nd quarter: 31,817 lb, 3rd quarter: 31,817 lb, and 4th quarter: 31,817 lb. Offsets shall be provided at the applicable offset ratio specified in Table 4-2 of Rule 2201 (as amended 9/21/06). [District Rule 2201]

6. ERC certificate numbers C-1058-2, C-1058-5, C-1059-2, S-3275-5, S-3273-2, S-3305-1, and/or S-3306-1 (or a certificate split from these certificates) shall be used to supply the required offsets, unless a revised offsetting proposal is received and approved by the District, upon which this Authority to Construct shall be reissued, administratively specifying the new offsetting proposal. Original public noticing requirements, if any, shall be duplicated prior to reissuance of this Demonstration of Compliance. [District Rule 2201]

7. Permittee shall submit an application to comply with Rule 2520 - Federally Mandated Operating Permits within twelve months of commencing operation. [District Rule 2520]

8. Permittee shall submit an application to comply with Rule 2540 - Acid Rain Program within twelve months of commencing operation. [District Rule 2540]

9. The owner/operator of the facility shall minimize the emissions from the gas turbine to the maximum extent possible during the commissioning period. Conditions #10 through #19 shall apply only during the commissioning period as defined below. Unless otherwise indicated, Conditions #20 through #85 shall apply after the commissioning period has ended. [District Rule 2201]

10. Commissioning activities are defined as, but not limited to, all testing, adjustment, tuning, and calibration activities recommended by the equipment manufacturers and the construction contractor to insure safe and reliable steady state operation of the gas turbines and associated electrical delivery systems. [District Rule 2201]

11. Commissioning period shall commence when all mechanical, electrical, and control systems are installed and individual system startup has been completed, or when a gas turbine is first fired, whichever occurs first. The commissioning period shall terminate when the plant has completed initial performance testing, completed final plant tuning, and is available for commercial operation. [District Rule 2201]

12. At the earliest feasible opportunity, in accordance with the recommendations of the equipment manufacturer and the construction contractor, the combustors of this unit shall be tuned to minimize emissions. [District Rule 2201]

13. At the earliest feasible opportunity, in accordance with the recommendations of the equipment manufacturer and the construction contractor, the Selective Catalytic Reduction (SCR) system and the oxidation catalyst shall be installed, adjusted, and operated to minimize emissions from this unit. [District Rule 2201]

14. Coincident with the steady-state operation of the SCR system and the oxidation catalyst at loads greater than 50% and after installation and tuning of the emission controls, NOx, CO, and VOC emissions from this unit shall comply with the limits specified in condition #37. [District Rule 2201]

15. The permittee shall submit a plan to the District at least four weeks prior to the first firing of this unit, describing the procedures to be followed during the commissioning period. The plan shall include a description of each commissioning activity, the anticipated duration of each activity in hours, and the purpose of the activity. The activities described shall include, but not limited to, the tuning of the combustors, the installation and operation of the SCR system and the oxidation catalyst, the installation, calibration, and testing of the NOx and CO continuous emissions monitors, and any activities requiring the firing of this unit without abatement by the SCR system or oxidation catalyst. [District Rule 2201]

16. When firing on natural gas, emission rates from the CTG during the commissioning period shall not exceed any of the following limits: NOx (as NO2) - 345.0 lb/hr; SOx - 4.7 lb/hr; PM10 - 18.0 lb/hr; CO - 2,200.0 lb/hr; or VOC (as methane) - 345.0 lb/hr. When firing on hydrogen-rich fuel, emission rates from the CTG during the commissioning period shall not exceed any of the following limits: NOx (as NO2) - 167.0 lb/hr; SOx - 3.1 lb/hr; PM10 - 36.0 lb/hr; CO - 394.0 lb/hr; or VOC (as methane) - 98.0 lb/hr. [District Rule 2201]

DRAFT

CONDITIONS CONTINUE ON NEXT PAGE

17. During the commissioning period, the permittee shall demonstrate NOx and CO compliance with condition #16 through the use of properly operated and maintained continuous emissions monitors and recorders as specified in this document. The monitored parameters for this unit shall be recorded at least once every 15 minutes (excluding normal calibration periods or when the monitored source is not in operation). [District Rule 2201]

18. The continuous emissions monitors specified in these permit conditions shall be installed, calibrated and operational prior to the first firing of the unit. After first firing, the detection range of the CEMS shall be adjusted as necessary to accurately measure the resulting range of NOx and CO emissions concentrations. [District Rule 2201]

19. The total number of firing hours of this unit without abatement of emissions by the SCR system and the oxidation catalyst shall not exceed 892 hours total during the commissioning period on natural gas and 644 hours during the commissioning period on hydrogen-rich fuel. Such operation of this unit without abatement shall be limited to discrete commissioning activities that can only be properly executed without the SCR system and the oxidation catalyst in place. Upon completion of these activities, the permittee shall provide written notice to the District and the unused balance of the firing hours without abatement shall expire. Records of the commissioning hours of operation for the unit shall be maintained. [District Rule 2201]

20. The total mass emissions of NOx, SOx, PM10, CO, and VOC that are emitted during the commissioning period shall accrue towards the consecutive twelve month emission limits specified in condition #38. NOx and CO total mass emissions will be determined from CEMs data and SOx, PM10, and VOC total mass emissions will be calculated. [District Rule 2201]

21. A selective catalytic reduction (SCR) system and an oxidation catalyst shall serve the gas turbine engine. Exhaust ducting may be equipped (if required) with a fresh air inlet blower to be used to lower the exhaust temperature prior to inlet of the SCR system catalyst. The permittee shall submit SCR and oxidation catalyst design details to the District at least 30 days prior to commencement of construction. [District Rule 2201]

22. Permittee shall submit continuous emission monitor design, installation, and operational details to the District at least 30 days prior to commencement of construction. [District Rule 2201]

23. The permittee shall submit to the District information correlating the NOx control system operating parameters to the associated measured NOx output. The information must be sufficient to allow the District to determine compliance with the NOx emission limits of this permit when no continuous emission monitoring data for NOx is available or when the continuous emission monitoring system is not operating properly. [District Rule 4703]

24. All equipment shall be maintained in good operating condition and shall be operated in a manner to minimize emissions of air contaminants into the atmosphere. [District Rule 2201]

25. No air contaminant shall be released into the atmosphere which causes a public nuisance. [District Rule 4102]

26. No air contaminant shall be discharged into the atmosphere for a period or periods aggregating more than three minutes in any one hour which is as dark as, or darker than, Ringelmann 1 or 20% opacity. [District Rule 4101]

27. Particulate matter emissions shall not exceed 0.1 grains/dscf in concentration. [District Rule 4201]

28. Combustion turbine generator (CTG) and electrical generator lube oil vents shall be equipped with mist eliminators. Visible emissions from lube oil vents shall not exhibit opacity of 5% or greater, except for a period or periods not exceeding three minutes in any one hour. [District Rules 2201 and 4101]

29. This unit shall be fired exclusively on PUC-regulated natural gas with a sulfur content of no greater than 0.75 grain of sulfur compounds (as S) per 100 dry scf of natural gas, hydrogen-rich fuel with a sulfur content no greater than 5 ppmv, or a combination of both fuels. [District Rule 2201 and 40 CFR 60.4330(a)(2)]

30. Emission rates from the combustion turbine generator, except during startup and shutdown periods, shall not exceed any of the following: NOx (as NO2) - 21.0 lb/hr and 2.0 ppmvd-NOx @ 15% O2 (3-hour rolling average) or 2.5 ppmvd @ 15% O2 (1-hour average), (except during startup/shutdown); VOC (as methane) - 5.5 lb/hr and 1.0 ppmvd-VOC @ 15% O2 when firing on hydrogen-rich fuel exclusively and 1.5 ppmvd @ 15% O2 when firing on fuel containing natural gas; CO - 25.6 lb/hr and 3.0 ppmvd-CO @ 15% O2 when firing on hydrogen-rich fuel exclusively and 4.0 ppmvd-CO @ 15% O2 when firing on fuel containing natural gas; PM10 - 19.8 lb/hr; or SOx (as SO2) - 6.8 lb/hr. The hourly rolling averages for NOx (as NO2) emission limits indicated above. All other pollutant emission limits are three-hour rolling averages. [District Rules 2201 and 4703 and 40 CFR 60.4320(a) & (b)]

DRAFT

CONDITIONS CONTINUE ON NEXT PAGE

31. Ammonia (NH3) emissions shall not exceed either of the following limits: 19.4 lb/hr or 5 ppmvd @ 15% O2 (based on a 24 hour rolling average). [District Rule 2201]

32. During periods of cold startup, CTG exhaust emission rates shall not exceed any of the following limits: NOx (as NO2) - 90.7 lb/hr, SOx - 5.1 lb/hr, PM10 - 19.0 lb/hr, CO - 1,679.7 lb/hr, or VOC - 266.7 lb/hr, based on one-hour averages. During periods of hot startup, CTG exhaust emission rates shall not exceed any of the following limits: NOx (as NO2) - 167.0 lb/hr, SOx - 5.1 lb/hr, PM10 - 19.8 lb/hr, CO - 394.0 lb/hr, or VOC - 98.0 lb/hr, based on one-hour averages. [District Rule 2201]

33. During periods of shutdown, CTG exhaust emission rates shall not exceed any of the following limits: NOx (as NO2) - 62.0 lb/hr, SOx - 2.6 lb/hr, PM10 5.0 lb/hr, CO - 126.0 lb/hr, or VOC - 21.1 lb/hr, based on one- hour averages. [District Rule 2201]

34. Startup shall be defined as the period of time during which a unit is brought from a shutdown status to its operating temperature and pressure, including the time required by the unit's emission control system to reach full operations. Hot startup is startup after 24 hours or less downtime and cold startup is startup after greater than 24 hours. Shutdown shall be defined as the period of time during which a unit is taken from an operational to a non-operational status as the fuel supply to the unit is completely turned off. [District Rules 2201 and 4703]

35. The duration of each startup and shutdown shall not exceed any of the following: 3 hours for each cold startup, 1 hour for each hot startup, and 0.5 hour for each shutdown. Startup and shutdown emissions shall be counted toward all applicable emission limits. [District Rules 2201 and 4703]

36. The emission control systems shall be in operation and emissions shall be minimized insofar as technologically feasible during startup and shutdown. [District Rule 4703]

37. Daily emissions (target level) from the CTG shall not exceed any of the following limits: NOx (as NO2) - 910.5 lb/day; VOC - 1,026.3 lb/day; CO - 6,058.2 lb/day; PM10 - 472.0 lb/day; or SOx (as SO2) - 163.2 lb/day. Daily emissions (upper level) from the CTG shall not exceed any of the following limits: NOx (as NO2) - 910.5 lb/day; VOC - 1,026.3 lb/day; CO - 6,058.2 lb/day; PM10 - 472.0 lb/day; or SOx (as SO2) - 163.2 lb/day. [District Rule 2201]

38. Annual emissions (target level) from the CTG, calculated on a twelve consecutive month rolling basis, shall not exceed any of the following: NOx (as NO2) - 172,234 lb/year; SOx (as SO2) - 56,481 lb/year; PM10 - 164,739 lb/year; CO - 261,869 lb/year; or VOC - 53,526 lb/year. Annual emissions (upper level) from the CTG, calculated on a twelve consecutive month rolling basis, shall not exceed any of the following: NOx (as NO2) - 335,723 lb/year; SOx (as SO2) - 56,481 lb/year; PM10 - 164,739 lb/year; CO - 311,411 lb/year; or VOC - 67,563 lb/year. [District Rule 2201]

39. Each one hour period shall commence on the hour. Each one hour period in a three hour rolling average will commence on the hour. The three hour average will be compiled from the three most recent one hour periods. Each one hour period in a twenty-four hour average for ammonia slip will commence on the hour. [District Rule 2201]

40. Daily emissions will be compiled for a twenty-four hour period starting and ending at twelve-midnight. Each month in the twelve consecutive month rolling average emissions shall commence at the beginning of the first day of the month. The twelve consecutive month rolling average emissions to determine compliance with annual emissions limitations shall be compiled from the twelve most recent calendar months. [District Rule 2201]

41. Compliance with the ammonia emission limits shall be demonstrated utilizing one of the following procedures: 1) calculate the daily ammonia emissions using the following equation: (ppmvd @ 15% O2) = ((a - (b x c/1,000,000)) x (1,000,000 / b)) x d, where a = average ammonia injection rate (lb/hr) / (17 lb/lb mol), b = dry exhaust flow rate (lb/hr) / (29 lb/lb mol), c = change in measured NOx concentration ppmvd @ 15% O2 across the catalyst, and d = correction factor. The correction factor shall be derived annually during compliance testing by comparing the measured and calculated ammonia slip; 2.) Utilize another District-approved calculation method using measured surrogate parameters to determine the daily ammonia emissions in ppmvd @ 15% O2. If this option is chosen, the permittee shall submit a detailed calculation protocol for District approval at least 60 days prior to commencement of operation; 3.) Alternatively, the permittee may utilize a continuous in-stack ammonia monitor to verify compliance with the ammonia emissions limit. If this option is chosen, the permittee shall submit a monitoring plan for District approval at least 60 days prior to commencement of operation. [District Rule 2201]

DRAFT

CONDITIONS CONTINUE ON NEXT PAGE

42. Source testing to measure startup and shutdown NOx, CO, and VOC mass emission rates shall be conducted prior to the end of the commissioning period and at least once every seven years thereafter. CEM relative accuracy shall be determined during startup source testing in accordance with 40 CFR 60, Appendix B. If CEM data is not certifiable to determine compliance with NOx and CO startup emission limits, then source testing to measure startup NOx and CO mass emission rates shall be conducted at least once every 12 months. [District Rule 1081]

43. Hazardous Air Pollutant (HAP) emissions shall not exceed 25 tpy all HAPS or 10 tpy any single HAP. [District Rule 4002]

44. Permittee shall conduct an initial speciated HAPS and total VOC source test for the combustion turbine generator, by District witnessed in situ sampling of exhaust gases by a qualified independent source test firm. The permittee shall correlate the total HAPs emissions rate and the single highest HAP emission rate to the VOC mass emission determined during the speciated HAPs source test. Initial and annual compliance with the HAPs emissions limit (25 tpy all HAPs or 10 tpy any single HAP) shall be demonstrated by the combined VOC emissions rates for the combustion gas turbine determined during initial and annual compliance source testing and the correlation between VOC emissions and HAP(s). [District Rule 4002]

45. Source testing to measure the NOx, CO, VOC, and NH3 emission rates (lb/hr and ppmvd @ 15% O2) and PM10 emission rate (lb/hr) shall be conducted within 120 days after initial operation and at least once every twelve months thereafter. [District Rules 1081 and 4703 and 40 CFR 60.4400(a)]

46. The sulfur content of each fuel source shall be: (i) documented in a valid purchase contract, a supplier certification, a tariff sheet or transportation contract or (ii) shall be demonstrated within 60 days after the end of the commissioning period and monitored weekly thereafter. If the sulfur content is demonstrated to be less than 1.0 gr/100 scf for eight consecutive weeks, then the monitoring frequency shall be every six months. If the result of any six month monitoring demonstrates that the fuel does not meet the fuel sulfur content limit, weekly monitoring shall resume. [40 CFR 60.4360, 60.4365(a) and 60.4370(c)]

47. The following test methods shall be used: NOx - EPA Method 7E or 20, PM10 - EPA Method 5/202 (front half and back half), CO - EPA Method 10 or 10B, O2 - EPA Method 3, 3A, or 20, VOC - EPA Method 18 or 25, and ammonia - EPA Method 206. EPA approved alternative test methods as approved by the District may also be used to address the source testing requirements of this permit. The request to utilize EPA approved alternative source testing methods must be submitted in writing and written approval received from the District prior to the submission of the source test plan. [District Rules 1081 and 4703 and 40 CFR 60.4400(1)(i)]

48. HHV and LHV of the fuel shall be determined using ASTM D3588, ASTM 1826, or ASTM 1945. [40 CFR 60.332(a),(b) and District Rule 4703, 6.4.5]

49. Fuel sulfur content shall be monitored using one of the following methods: ASTM Methods D1072, D3246, D4084, D4468, D4810, D6228, D6667 or Gas Processors Association Standard 2377. [40 CFR 60.4415(a)(1)(i)]

50. The exhaust stack shall be equipped with permanent provisions to allow collection of stack gas samples consistent with EPA test methods and shall be equipped with safe permanent provisions to sample stack gases with a portable NOx, CO, and O2 analyzer during District inspections. The sampling ports shall be located in accordance with the CARB regulation titled California Air Resources Board Air Monitoring Quality Assurance Volume VI, Standard Operating Procedures for Stationary Source Emission Monitoring and Testing. [District Rule 1080]

51. Compliance demonstration (source testing) shall be District witnessed or authorized and samples shall be collected by a certified testing laboratory. Source testing shall be conducted using the methods and procedures approved by the District. The District must be notified 30 days prior to any compliance source test, and a source test plan must be submitted for approval 15 days prior to testing. The results of each source test shall be submitted to the District within 60 days thereafter. [District Rule 1081]

52. The turbine shall be equipped with a continuous monitoring system to measure and record fuel consumption. [District Rules 2201 and 4703 and 40 CFR 60.4335(b)(1)]

DRAFT

CONDITIONS CONTINUE ON NEXT PAGE

53. The owner or operator shall install, certify, maintain, operate and quality-assure a Continuous Emission Monitoring System (CEMS) which continuously measures and records the exhaust gas NOx, CO and O2 concentrations. Continuous emissions monitor(s) shall be capable of monitoring emissions during normal operating conditions, and during startups and shutdowns provided the CEMS pass the relative accuracy requirement for startups and shutdowns specified herein. If relative accuracy of CEMS cannot be demonstrated during startup conditions, CEMS results during startup and shutdown events shall be replaced with startup emission rates obtained from source testing to determine compliance with emission limits contained in this document. [District Rules 1080, 2201, and 4703 and 40 CFR 60.4335(b)(1)]

54. The CEMS shall complete a minimum of one cycle of operation (sampling, analyzing, and data recording) for each successive 15-minute period or shall meet equivalent specifications established by mutual agreement of the District, the ARB and the EPA. [District Rule 1080 and 40 CFR 60.4345(b)]

55. The NOx, CO and O2 CEMS shall meet the requirements in 40 CFR 60, Appendix F Procedure 1 and Part 60, Appendix B Performance Specification 2 (PS 2), or shall meet equivalent specifications established by mutual agreement of the District, the ARB, and the EPA. [District Rule 1080 and 40 CFR 60.4345(a)]

56. Audits of continuous emission monitors shall be conducted quarterly, except during quarters in which relative accuracy and total accuracy testing is performed, in accordance with EPA guidelines. The District shall be notified prior to completion of the audits. Audit reports shall be submitted along with quarterly compliance reports to the District. [District Rule 1080]

57. The owner/operator shall perform a relative accuracy test audit (RATA) for the NOx, CO, and O2 CEMs as specified by 40 CFR Part 60, Appendix F, 5.11, at least once every four calendar quarters. The permittee shall comply with the applicable requirements for quality assurance testing and maintenance of the continuous emission monitor equipment in accordance with the procedures and guidance specified in 40 CFR Part 60, Appendix F. [District Rule 1080]

58. Results of the CEM system shall be averaged over a one hour period for NOx emissions and a three hour period for CO emissions using consecutive 15-minute sampling periods in accordance with all applicable requirements of CFR 60.13. [District Rule 4703 and 40 CFR 60.13]

59. Excess emissions shall be defined as any operating hour in which the 4-hour or 30-day rolling average NOX concentration exceeds applicable emissions limit and a period of monitor downtime shall be any unit operating hour in which sufficient data are not obtained to validate the hour for either NOX or O2 (or both). [40 CFR 60.4380(b)(1)]

60. Results of continuous emissions monitoring shall be reduced according to the procedure established in 40 CFR, Part 51, Appendix P, paragraphs 5.0 through 5.3.3, or by other methods deemed equivalent by mutual agreement with the District, the ARB, and the EPA. [District Rule 1080]

61. The facility shall install and maintain equipment, facilities, and systems compatible with the District's CEM data polling software system and shall make CEM data available to the District's automated polling system on a daily basis. [District Rule 1080]

62. Upon notice by the District that the facility's CEM system is not providing polling data, the facility may continue to operate without providing automated data for a maximum of 30 days per calendar year provided the CEM data is sent to the District by a District-approved alternative method. [District Rule 1080]

63. The owner or operator shall, upon written notice from the APCO, provide a summary of the data obtained from the CEM systems. This summary shall be in the form and the manner prescribed by the APCO. [District Rule 1080]

64. The owner or operator shall submit a written report of CEM operations for each calendar quarter to the APCO. The report is due on the 30th day following the end of the calendar quarter and shall include the following: Time intervals, data and magnitude of excess NOX emissions, nature and the cause of excess (if known), corrective actions taken and preventative measures adopted; Averaging period used for data reporting corresponding to the averaging period specified in the emission test period and used to determine compliance with an emissions standard; Applicable time and date of each period during which the CEM was inoperative (monitor downtime), except for zero and span checks, and the nature of system repairs and adjustments; A negative declaration when no excess emissions occurred. [District Rule 1080 and 40 CFR 60.4375(a) and 60.4395]

65. APCO or an authorized representative shall be allowed to inspect, as determined to be necessary, the required monitoring devices to ensure that such devices are functioning properly. [District Rule 1080]

DRAFT

CONDITIONS CONTINUE ON NEXT PAGE

66. Permittee shall notify the District of any breakdown condition as soon as reasonably possible, but no later than one hour after its detection, unless the owner or operator demonstrates to the District's satisfaction that the longer reporting period was necessary. [District Rule 1100, 6.1]

67. The District shall be notified in writing within ten days following the correction of any breakdown condition. The breakdown notification shall include a description of the equipment malfunction or failure, the date and cause of the initial failure, the estimated emissions in excess of those allowed, and the methods utilized to restore normal operations. [District Rule 1100, 7.0]

68. The permittee shall maintain the following records: date and time, duration, and type of any startup, shutdown, or malfunction; performance testing, evaluations, calibrations, checks, adjustments, any period during which a continuous monitoring system or monitoring device was inoperative, and maintenance of any continuous emission monitor. [District Rules 2201 and 4703]

69. The permittee shall maintain the following records: quarterly hours of operation, fuel consumption (scf/hr and scf/rolling twelve month period), continuous emission monitor measurements, calculated ammonia slip, and calculated NOx mass emission rates (lb/hr and lb/twelve month rolling period). [District Rules 2201 and 4703]

70. All records shall be maintained and retained on-site for a period of at least 5 years and shall be made available for District inspection upon request. [District Rules 1070, 2201, and 4703]

71. {3433} Disturbances of soil related to any construction, demolition, excavation, extraction, or other earthmoving activities shall comply with the requirements for fugitive dust control in District Rule 8021 unless specifically exempted under Section 4.0 of Rule 8021 or Rule 8011. [District Rules 8011 and 8021]

72. {3434} An owner/operator shall submit a Dust Control Plan to the APCO prior to the start of any construction activity on any site that will include 10 acres or more of disturbed surface area for residential developments, or 5 acres or more of disturbed surface area for non-residential development, or will include moving, depositing, or relocating more than 2,500 cubic yards per day of bulk materials on at least three days. [District Rules 8011 and 8021]

73. {3435} An owner/operator shall prevent or cleanup any carryout or trackout in accordance with the requirements of District Rule 8041 Section 5.0, unless specifically exempted under Section 4.0 of Rule 8041 (8/19/04) or Rule 8011(8/19/04). [District Rules 8011 and 8021]

74. {3436} Whenever open areas are disturbed, or vehicles are used in open areas, the facility shall comply with the requirements of Section 5.0 of District Rule 8051, unless specifically exempted under Section 4.0 of Rule 8051 or Rule 8011. [District Rules 8011 and 8051]

75. {3437} Any paved road or unpaved road shall comply with the requirements of District Rule 8061 unless specifically exempted under Section 4.0 of Rule 8061 or Rule 8011. [District Rules 8011 and 8061]

76. {3438} Water, gravel, roadmix, or chemical/organic dust stabilizers/suppressants, vegetative materials, or other District-approved control measure shall be applied to unpaved vehicle travel areas as required to limit Visible Dust Emissions to 20% opacity and comply with the requirements for a stabilized unpaved road as defined in Section 3.59 of District Rule 8011. [District Rule 8011 and 8071]

77. {3439} Where dusting materials are allowed to accumulate on paved surfaces, the accumulation shall be removed daily or water and/or chemical/organic dust stabilizers/suppressants shall be applied to the paved surface as required to maintain continuous compliance with the requirements for a stabilized unpaved road as defined in Section 3.59 of District Rule 8011 and limit Visible Dust Emissions (VDE) to 20% opacity. [District Rule 8011 and 8071]

78. {3440} On each day that 50 or more Vehicle Daily Trips or 25 or more Vehicle Daily Trips with 3 axles or more will occur on an unpaved vehicle/equipment traffic area, permittee shall apply water, gravel, roadmix, or chemical/organic dust stabilizers/suppressants, vegetative materials, or other District-approved control measure as required to limit Visible Dust Emissions to 20% opacity and comply with the requirements for a stabilized unpaved road as defined in Section 3.59 of District Rule 8011. [District Rule 8011 and 8071]

79. {3441} Whenever any portion of the site becomes inactive, Permittee shall restrict access and periodically stabilize any disturbed surface to comply with the conditions for a stabilized surface as defined in Section 3.58 of District Rule 8011. [District Rules 8011 and 8071]

DRAFT

CONDITIONS CONTINUE ON NEXT PAGE

80. {3442} Records and other supporting documentation shall be maintained as required to demonstrate compliance with the requirements of the rules under Regulation VIII only for those days that a control measure was implemented. Such records shall include the type of control measure(s) used, the location and extent of coverage, and the date, amount, and frequency of application of dust suppressant, manufacturer's dust suppressant product information sheet that identifies the name of the dust suppressant and application instructions. Records shall be kept for one year following project completion that results in the termination of all dust generating activities. [District Rules 8011, 8031, and 8071]

81. Note on NOx, CO, and VOC BACT limits: The applicant proposed to meet emission limits of 4.0 ppmvd-NOx @ 15% O2, 3.0 ppmvd-CO @ 15% O2 when firing on hydrogen-rich fuel exclusively and 5.0 ppmvd-CO @ 15% O2 when firing on fuel containing natural gas, and 1.0 ppmvd-VOC @ 15% O2 when firing on hydrogen-rich fuel exclusively and 2.0 ppmvd @ 15% O2 when firing on fuel containing natural (except during startup/shutdown) as these are vendor guaranteed emission rates. The applicant has also agreed to the installation of additional selective catalytic reduction and oxidation catalytic controls on the combustion turbine generator to reduce NOx emissions to a target level of 2.0 ppmvd-NOx @ 15% O2 (3-hour rolling average) or 2.5 ppmvd@ 15% O2 (1-hour average) and 3.0 ppmvd-CO @ 15% O2 when firing on hydrogen-rich fuel exclusively and 4.0 ppmvd-CO @ 15% O2 when firing on fuel containing natural gas, and 1.0 ppmvd-VOC @ 15% O2 when firing on hydrogen-rich fuel exclusively and 1.5 ppmvd @ 15% O2 when firing on fuel containing natural gas (except during startup/shutdown). Target levels have not yet been successfully demonstrated on combustion turbine generators that require burner technology to fire hydrogen-rich fuel. Therefore, if per the District's determination, any of the control technologies do not perform satisfactorily during the initial trial period or experiences repeated failures that are not the result of improper operation, that technology will not be deemed BACT for the particular installation. [District Rule 2201]

82. Emissions from the unit in excess of lower targeted NOx, CO, and VOC limits shall not constitute a violation of this permit provided that NOx, CO, and VOC emissions are limited to the lowest achievable emission rate to satisfy BACT. BACT for NOx, CO, and VOC from this unit shall consist of all other emission limitations and operational and design conditions contained in this permit. The final BACT level for NOx, CO, and VOC shall be determined to the satisfaction of the Air Pollution Control Officer in accordance with District Rule 2201 and the District's BACT policy, after 24 months of operating history and a successful compliance source test. [District Rule 2201]

83. If NOx, CO, and VOC emissions from the unit continue to exceed the lower targeted emissions limits after the 24-month BACT determination period, the permittee shall have 90 days to submit a report containing all monitoring and source test information to the District. The report shall also include an explanation of the steps taken to operate and maintain the combustion turbine generator in such a manner as to minimize any of the emissions exceeding the lower limits and a detailed analysis of all factors that prohibit compliance with the lower emissions limit. In the report, the permittee may also propose a final BACT emission limit for the pollutant exceeding the lower limit for inclusion in this permit. The monitoring data and source test information gathered in accordance with this permit may be shared with other technical experts so their input can be considered when determining the final BACT limits that can be consistently achieved. [District Rule 2201]

84. The District shall establish the final BACT limit for NOx, CO, and VOC, including any applicable averaging periods, and revise the applicable limits contained in the permit within 90 days of the successful completion of the BACT determination period or receipt of the report from the permittee. Within 30 days of receipt of the District's determination, the permittee shall submit an Authority to Construct application to incorporate the revised emissions limit(s). In no case shall the final BACT emission limitation(s) be higher than 4.0 ppmvd-NOx @ 15% O2, 3.0 ppmvd-CO @ 15% O2 when firing on hydrogen-rich fuel exclusively and 5.0 ppmvd-CO @ 15% O2 when firing on fuel containing natural gas, and 1.0 ppmvd-VOC @ 15% O2 when firing on hydrogen-rich fuel gas exclusively and 2.0 ppmvd @ 15% O2 when firing on fuel containing natural (except during startup/shutdown). If emissions do not exceed the higher limits, the unit shall be allowed to continue to operate after the BACT evaluation period has ended and before the new Authority to Construct permit has been issued. [District Rule 2201]

85. If the unit demonstrates reasonably reliable compliance with any of the emissions limit of 2.0 ppmvd-NOx @ 15% O2 (3-hour rolling average) or 2.5 ppmvd@ 15% O2 (1-hour average), 1.0 ppmvd-VOC @ 15% O2 when firing on hydrogen-rich fuel exclusively and 1.5 ppmvd @ 15% O2 when firing on fuel containing natural gas, or 3.0 ppmvd-CO @ 15% O2 when firing on hydrogen-rich fuel exclusively and 4.0 ppmvd-CO @ 15% O2 when firing on fuel containing natural gas (except during startup/shutdown) during the BACT evaluation period, any of those limits shall be deemed BACT for the installation. [District Rule 2201]

DRAFT

San Joaquin Valley
Air Pollution Control District

AUTHORITY TO CONSTRUCT

DRAFT

PERMIT NO: S-7616-11-0

ISSUANCE DATE: DRAFT

LEGAL OWNER OR OPERATOR: HYDROGEN ENERGY CALIFORNIA, LLC
MAILING ADDRESS: ONE WORLD TRADE CENTER
SUITE 1600
LONG BEACH, CA 90831-1600

LOCATION: SEC 10 T30S R 24E
TUPMAN, CA

EQUIPMENT DESCRIPTION:
40,200 GALLONS PER MINUTE MULTI-CELL MECHANICAL-DRAFT COOLING TOWER WITH HIGH-EFFICIENCY DRIFT ELIMINATORS, SERVING AIR SEPARATION UNIT

CONDITIONS

1. The permittee shall enter into an Air Quality Mitigation Settlement Agreement with the District prior to issuance of the Final Determination of Compliance, or such other time that is mutually agreeable.
2. Prior to initial operation of S-7616-1 through -7 and -9 through -13, permittee shall provide PM10 emission reduction credits for the following quantity of emissions: 1st quarter: 48,489 lb, 2nd quarter: 48,489 lb, 3rd quarter: 48,489 lb, and 4th quarter: 48,489 lb. Offsets shall be provided at the applicable offset ratio specified in Table 4-2 of Rule 2201 (as amended 9/21/06). SOx ERCs may be used to offset PM10 increases at an interpollutant ratio of 1.0 lb-SOx: 1.0 lb-PM10. [District Rule 2201]
3. ERC certificate numbers C-1058-2, C-1058-5, C-1059-2, S-3275-5, S-3273-2, S-3305-1, and/or S-3306-1 (or a certificate split from these certificates) shall be used to supply the required offsets, unless a revised offsetting proposal is received and approved by the District, upon which this Authority to Construct shall be reissued, administratively specifying the new offsetting proposal. Original public noticing requirements, if any, shall be duplicated prior to reissuance of this Demonstration of Compliance. [District Rule 2201]
4. Permittee shall submit an application to comply with Rule 2520 - Federally Mandated Operating Permits within twelve months of commencing operation. [District Rule 2520]
5. Permittee shall submit an application to comply with Rule 2540 - Acid Rain Program within twelve months of commencing operation. [District Rule 2540]

CONDITIONS CONTINUE ON NEXT PAGE

YOU MUST NOTIFY THE DISTRICT COMPLIANCE DIVISION AT (661) 392-5500 WHEN CONSTRUCTION IS COMPLETED AND PRIOR TO OPERATING THE EQUIPMENT OR MODIFICATIONS AUTHORIZED BY THIS AUTHORITY TO CONSTRUCT. This is NOT a PERMIT TO OPERATE. Approval or denial of a PERMIT TO OPERATE will be made after an inspection to verify that the equipment has been constructed in accordance with the approved plans, specifications and conditions of this Authority to Construct, and to determine if the equipment can be operated in compliance with all Rules and Regulations of the San Joaquin Valley Unified Air Pollution Control District. Unless construction has commenced pursuant to Rule 2050, this Authority to Construct shall expire and application shall be cancelled two years from the date of issuance. The applicant is responsible for complying with all laws, ordinances and regulations of all other governmental agencies which may pertain to the above equipment.

Seyed Sadredin, Executive Director / APCO

DRAFT

DAVID WARNER, Director of Permit Services
S-7616-11-0 : Jun 16 2010 2:07PM -- RAMIREZH : Joint Inspection NOT Required

6. Permittee shall submit cooling tower design details including the cooling tower type, drift eliminator design details, and materials of construction to the District at least 90 days before the tower is operated. [District Rule 7012]

7. {271} All equipment shall be maintained in good operating condition and shall be operated in a manner to minimize emissions of air contaminants into the atmosphere. [District NSR Rule]

8. {98} No air contaminant shall be released into the atmosphere which causes a public nuisance. [District Rule 4102]

9. {15} No air contaminant shall be discharged into the atmosphere for a period or periods aggregating more than three minutes in any one hour which is as dark as, or darker than, Ringelmann 1 or 20% opacity. [District Rule 4101]

10. {14} Particulate matter emissions shall not exceed 0.1 grains/dscf in concentration. [District Rule 4201]

11. No hexavalent chromium containing compounds shall be added to cooling tower circulating water. [District Rule 7012]

12. Drift eliminator drift rate shall not exceed 0.0005%. [District Rule 2201]

13. PM10 emission rate from the cooling tower shall not exceed 21.7 lb/day. [District Rule 2201]

14. Compliance with the PM10 daily emission limit shall demonstrated as follows: PM10 lb/day = circulating water recirculation rate x total dissolved solids concentration in the blowdown water x design drift rate. [District Rule 2201]

15. Compliance with the PM10 emission limit shall be determined by blowdown water sample analysis by independent laboratory within 120 days of initial operation and quarterly thereafter. [District Rule 1081]

16. {3433} Disturbances of soil related to any construction, demolition, excavation, extraction, or other earthmoving activities shall comply with the requirements for fugitive dust control in District Rule 8021 unless specifically exempted under Section 4.0 of Rule 8021 or Rule 8011. [District Rules 8011 and 8021]

17. {3434} An owner/operator shall submit a Dust Control Plan to the APCO prior to the start of any construction activity on any site that will include 10 acres or more of disturbed surface area for residential developments, or 5 acres or more of disturbed surface area for non-residential development, or will include moving, depositing, or relocating more than 2,500 cubic yards per day of bulk materials on at least three days. [District Rules 8011 and 8021]

18. {3435} An owner/operator shall prevent or cleanup any carryout or trackout in accordance with the requirements of District Rule 8041 Section 5.0, unless specifically exempted under Section 4.0 of Rule 8041 (8/19/04) or Rule 8011(8/19/04). [District Rules 8011 and 8021]

19. {3436} Whenever open areas are disturbed, or vehicles are used in open areas, the facility shall comply with the requirements of Section 5.0 of District Rule 8051, unless specifically exempted under Section 4.0 of Rule 8051 or Rule 8011. [District Rules 8011 and 8051]

20. {3437} Any paved road or unpaved road shall comply with the requirements of District Rule 8061 unless specifically exempted under Section 4.0 of Rule 8061 or Rule 8011. [District Rules 8011 and 8061]

21. {3438} Water, gravel, roadmix, or chemical/organic dust stabilizers/suppressants, vegetative materials, or other District-approved control measure shall be applied to unpaved vehicle travel areas as required to limit Visible Dust Emissions to 20% opacity and comply with the requirements for a stabilized unpaved road as defined in Section 3.59 of District Rule 8011. [District Rule 8011 and 8071]

22. {3439} Where dusting materials are allowed to accumulate on paved surfaces, the accumulation shall be removed daily or water and/or chemical/organic dust stabilizers/suppressants shall be applied to the paved surface as required to maintain continuous compliance with the requirements for a stabilized unpaved road as defined in Section 3.59 of District Rule 8011 and limit Visible Dust Emissions (VDE) to 20% opacity. [District Rule 8011 and 8071]

23. {3440} On each day that 50 or more Vehicle Daily Trips or 25 or more Vehicle Daily Trips with 3 axles or more will occur on an unpaved vehicle/equipment traffic area, permittee shall apply water, gravel, roadmix, or chemical/organic dust stabilizers/suppressants, vegetative materials, or other District-approved control measure as required to limit Visible Dust Emissions to 20% opacity and comply with the requirements for a stabilized unpaved road as defined in Section 3.59 of District Rule 8011. [District Rule 8011 and 8071]

DRAFT

CONDITIONS CONTINUE ON NEXT PAGE

24. {3441} Whenever any portion of the site becomes inactive, Permittee shall restrict access and periodically stabilize any disturbed surface to comply with the conditions for a stabilized surface as defined in Section 3.58 of District Rule 8011. [District Rules 8011 and 8071]

25. {3442} Records and other supporting documentation shall be maintained as required to demonstrate compliance with the requirements of the rules under Regulation VIII only for those days that a control measure was implemented. Such records shall include the type of control measure(s) used, the location and extent of coverage, and the date, amount, and frequency of application of dust suppressant, manufacturer's dust suppressant product information sheet that identifies the name of the dust suppressant and application instructions. Records shall be kept for one year following project completion that results in the termination of all dust generating activities. [District Rules 8011, 8031, and 8071]

DRAFT

San Joaquin Valley
Air Pollution Control District

AUTHORITY TO CONSTRUCT

DRAFT

PERMIT NO: S-7616-12-0 **ISSUANCE DATE:** DRAFT

LEGAL OWNER OR OPERATOR: HYDROGEN ENERGY CALIFORNIA, LLC
MAILING ADDRESS: ONE WORLD TRADE CENTER
SUITE 1600
LONG BEACH, CA 90831-1600

LOCATION: SEC 10 T30S R 24E
TUPMAN, CA

EQUIPMENT DESCRIPTION:
175,000 GALLONS PER MINUTE MULTI-CELL MECHANICAL DRAFT COOLING TOWER WITH HIGH-EFFICIENCY DRIFT ELIMINATORS, SERVING POWER BLOCK

CONDITIONS

1. The permittee shall enter into an Air Quality Mitigation Settlement Agreement with the District prior to issuance of the Final Determination of Compliance, or such other time that is mutually agreeable.
2. Prior to initial operation of S-7616-1 through -7 and -9 through -13, permittee shall provide PM10 emission reduction credits for the following quantity of emissions: 1st quarter: 48,489 lb, 2nd quarter - 48,489 lb, 3rd quarter: 48,489 lb, and 4th quarter: 48,489 lb. Offsets shall be provided at the applicable offset ratio specified in Table 4-2 of Rule 2201 (as amended 9/21/06). SOx ERCs may be used to offset PM10 increases at an interpollutant ratio of 1.0 lb-SOx: 1.0 lb-PM10. [District Rule 2201]
3. ERC certificate numbers C-1058-2, C-1058-5, C-1059-2, S-3275-5, S-3273-2, S-3305-1, and/or S-3306-1 (or a certificate split from these certificates) shall be used to supply the required offsets, unless a revised offsetting proposal is received and approved by the District, upon which this Authority to Construct shall be reissued, administratively specifying the new offsetting proposal. Original public noticing requirements, if any, shall be duplicated prior to reissuance of this Demonstration of Compliance. [District Rule 2201]
4. Permittee shall submit an application to comply with Rule 2520 - Federally Mandated Operating Permits within twelve months of commencing operation. [District Rule 2520]
5. Permittee shall submit an application to comply with Rule 2540 - Acid Rain Program within twelve months of commencing operation. [District Rule 2540]

CONDITIONS CONTINUE ON NEXT PAGE

YOU MUST NOTIFY THE DISTRICT COMPLIANCE DIVISION AT (661) 392-5500 WHEN CONSTRUCTION IS COMPLETED AND PRIOR TO OPERATING THE EQUIPMENT OR MODIFICATIONS AUTHORIZED BY THIS AUTHORITY TO CONSTRUCT. This is NOT a PERMIT TO OPERATE. Approval or denial of a PERMIT TO OPERATE will be made after an inspection to verify that the equipment has been constructed in accordance with the approved plans, specifications and conditions of this Authority to Construct, and to determine if the equipment can be operated in compliance with all Rules and Regulations of the San Joaquin Valley Unified Air Pollution Control District. Unless construction has commenced pursuant to Rule 2050, this Authority to Construct shall expire and application shall be cancelled two years from the date of issuance. The applicant is responsible for complying with all laws, ordinances and regulations of all other governmental agencies which may pertain to the above equipment.

Seyed Sadredin, Executive Director / APCO

DRAFT

DAVID WARNER, Director of Permit Services
S-7616-12-0 : Jun 16 2010 2:07PM -- RAMIREZH : Joint Inspection NOT Required

6. Permittee shall submit cooling tower design details including the cooling tower type, drift eliminator design details, and materials of construction to the District at least 90 days before the tower is operated. [District Rule 7012]
7. {271} All equipment shall be maintained in good operating condition and shall be operated in a manner to minimize emissions of air contaminants into the atmosphere. [District NSR Rule]
8. {98} No air contaminant shall be released into the atmosphere which causes a public nuisance. [District Rule 4102]
9. {15} No air contaminant shall be discharged into the atmosphere for a period or periods aggregating more than three minutes in any one hour which is as dark as, or darker than, Ringelmann 1 or 20% opacity. [District Rule 4101]
10. {14} Particulate matter emissions shall not exceed 0.1 grains/dscf in concentration. [District Rule 4201]
11. No hexavalent chromium containing compounds shall be added to cooling tower circulating water. [District Rule 7012]
12. Drift eliminator drift rate shall not exceed 0.0005%. [District Rule 2201]
13. PM10 emission rate from the cooling tower shall not exceed 94.6 lb/day. [District Rule 2201]
14. Compliance with the PM10 daily emission limit shall demonstrated as follows: PM10 lb/day = circulating water recirculation rate x total dissolved solids concentration in the blowdown water x design drift rate. [District Rule 2201]
15. Compliance with the PM10 emission limit shall be determined by blowdown water sample analysis by independent laboratory within 120 days of initial operation and quarterly thereafter. [District Rule 1081]
16. {3433} Disturbances of soil related to any construction, demolition, excavation, extraction, or other earthmoving activities shall comply with the requirements for fugitive dust control in District Rule 8021 unless specifically exempted under Section 4.0 of Rule 8021 or Rule 8011. [District Rules 8011 and 8021]
17. {3434} An owner/operator shall submit a Dust Control Plan to the APCO prior to the start of any construction activity on any site that will include 10 acres or more of disturbed surface area for residential developments, or 5 acres or more of disturbed surface area for non-residential development, or will include moving, depositing, or relocating more than 2,500 cubic yards per day of bulk materials on at least three days. [District Rules 8011 and 8021]
18. {3435} An owner/operator shall prevent or cleanup any carryout or trackout in accordance with the requirements of District Rule 8041 Section 5.0, unless specifically exempted under Section 4.0 of Rule 8041 (8/19/04) or Rule 8011(8/19/04). [District Rules 8011 and 8021]
19. {3436} Whenever open areas are disturbed, or vehicles are used in open areas, the facility shall comply with the requirements of Section 5.0 of District Rule 8051, unless specifically exempted under Section 4.0 of Rule 8051 or Rule 8011. [District Rules 8011 and 8051]
20. {3437} Any paved road or unpaved road shall comply with the requirements of District Rule 8061 unless specifically exempted under Section 4.0 of Rule 8061 or Rule 8011. [District Rules 8011 and 8061]
21. {3438} Water, gravel, roadmix, or chemical/organic dust stabilizers/suppressants, vegetative materials, or other District-approved control measure shall be applied to unpaved vehicle travel areas as required to limit Visible Dust Emissions to 20% opacity and comply with the requirements for a stabilized unpaved road as defined in Section 3.59 of District Rule 8011. [District Rule 8011 and 8071]
22. {3439} Where dusting materials are allowed to accumulate on paved surfaces, the accumulation shall be removed daily or water and/or chemical/organic dust stabilizers/suppressants shall be applied to the paved surface as required to maintain continuous compliance with the requirements for a stabilized unpaved road as defined in Section 3.59 of District Rule 8011 and limit Visible Dust Emissions (VDE) to 20% opacity. [District Rule 8011 and 8071]
23. {3440} On each day that 50 or more Vehicle Daily Trips or 25 or more Vehicle Daily Trips with 3 axles or more will occur on an unpaved vehicle/equipment traffic area, permittee shall apply water, gravel, roadmix, or chemical/organic dust stabilizers/suppressants, vegetative materials, or other District-approved control measure as required to limit Visible Dust Emissions to 20% opacity and comply with the requirements for a stabilized unpaved road as defined in Section 3.59 of District Rule 8011. [District Rule 8011 and 8071]

DRAFT

CONDITIONS CONTINUE ON NEXT PAGE

24. {3441} Whenever any portion of the site becomes inactive, Permittee shall restrict access and periodically stabilize any disturbed surface to comply with the conditions for a stabilized surface as defined in Section 3.58 of District Rule 8011. [District Rules 8011 and 8071]

25. {3442} Records and other supporting documentation shall be maintained as required to demonstrate compliance with the requirements of the rules under Regulation VIII only for those days that a control measure was implemented. Such records shall include the type of control measure(s) used, the location and extent of coverage, and the date, amount, and frequency of application of dust suppressant, manufacturer's dust suppressant product information sheet that identifies the name of the dust suppressant and application instructions. Records shall be kept for one year following project completion that results in the termination of all dust generating activities. [District Rules 8011, 8031, and 8071]

DRAFT

San Joaquin Valley
Air Pollution Control District

AUTHORITY TO CONSTRUCT

PERMIT NO: S-7616-13-0

ISSUANCE DATE: DRAFT

LEGAL OWNER OR OPERATOR: HYDROGEN ENERGY CALIFORNIA, LLC
MAILING ADDRESS: ONE WORLD TRADE CENTER
SUITE 1600
LONG BEACH, CA 90831-1600

LOCATION: SEC 10 T30S R 24E
TUPMAN, CA

EQUIPMENT DESCRIPTION:
142 MMBTU/HR NBC MODEL NS-F-70-ECON NATURAL GAS FIRED AUXILIARY BOILER EQUIPPED WITH TODD COMBUSTION LOW NOX BURNERS AND FLUE GAS RECIRCULATION (OR EQUIVALENT)

CONDITIONS

1. The permittee shall enter into an Air Quality Mitigation Settlement Agreement with the District prior to issuance of the Final Determination of Compliance, or such other time that is mutually agreeable.
2. Prior to initial operation of S-7616-2, -3, -5, -6, -7, -9, and -13, permittee shall provide NOx emission reduction credits for the following quantity of emissions: 1st quarter: 92,319 lb, 2nd quarter: 92,319 lb, 3rd quarter: 92,319 lb, and 4th quarter: 92,319 lb. Offsets shall be provided at the applicable offset ratio specified in Table 4-2 of Rule 2201 (as amended 9/21/06). [District Rule 2201]
3. Prior to initial operation of S-7616-1 through -7 and -9 through -13, permittee shall provide PM10 emission reduction credits for the following quantity of emissions: 1st quarter: 48,489 lb, 2nd quarter: 48,489 lb, 3rd quarter: 48,489 lb, and 4th quarter: 48,489 lb. Offsets shall be provided at the applicable offset ratio specified in Table 4-2 of Rule 2201 (as amended 9/21/06). SOx ERCs may be used to offset PM10 increases at an interpollutant ratio of 1.0 lb-SOx: 1.0 lb-PM10. [District Rule 2201]
4. Prior to initial operation of S-7616-2, -3, -5, -6, -7, -9, and -13, permittee shall provide SOx emission reduction credits for the following quantity of emissions: 1st quarter: 5,315 lb, 2nd quarter: 5,315 lb, 3rd quarter: 5,315 lb, and 4th quarter: 5,315 lb. Offsets shall be provided at the applicable offset ratio specified in Table 4-2 of Rule 2201 (as amended 9/21/06). [District Rule 2201]

CONDITIONS CONTINUE ON NEXT PAGE

YOU MUST NOTIFY THE DISTRICT COMPLIANCE DIVISION AT (661) 392-5500 WHEN CONSTRUCTION IS COMPLETED AND PRIOR TO OPERATING THE EQUIPMENT OR MODIFICATIONS AUTHORIZED BY THIS AUTHORITY TO CONSTRUCT. This is NOT a PERMIT TO OPERATE. Approval or denial of a PERMIT TO OPERATE will be made after an inspection to verify that the equipment has been constructed in accordance with the approved plans, specifications and conditions of this Authority to Construct, and to determine if the equipment can be operated in compliance with all Rules and Regulations of the San Joaquin Valley Unified Air Pollution Control District. Unless construction has commenced pursuant to Rule 2050, this Authority to Construct shall expire and application shall be cancelled two years from the date of issuance. The applicant is responsible for complying with all laws, ordinances and regulations of all other governmental agencies which may pertain to the above equipment.

Seyed Sadredin, Executive Director / APCO

DRAFT

DAVID WARNER, Director of Permit Services
S-7616-13-0 : Jun 16 2010 2:07PM – RAMIREZH : Joint Inspection NOT Required

5. Prior to initial operation of S-7616-2, -3, -5 through -9, and -13, permittee shall provide VOC emission reduction credits for the following quantity of emissions: 1st quarter: 31,817 lb, 2nd quarter: 31,817 lb, 3rd quarter: 31,817 lb, and 4th quarter: 31,817 lb. Offsets shall be provided at the applicable offset ratio specified in Table 4-2 of Rule 2201 (as amended 9/21/06). [District Rule 2201]

6. ERC certificate numbers C-1058-2, C-1058-5, C-1059-2, S-3275-5, S-3273-2, S-3305-1, and/or S-3306-1 (or a certificate split from these certificates) shall be used to supply the required offsets, unless a revised offsetting proposal is received and approved by the District, upon which this Authority to Construct shall be reissued, administratively specifying the new offsetting proposal. Original public noticing requirements, if any, shall be duplicated prior to reissuance of this Demonstration of Compliance. [District Rule 2201]

7. Permittee shall submit an application to comply with Rule 2520 - Federally Mandated Operating Permits within twelve months of commencing operation. [District Rule 2520]

8. Permittee shall submit an application to comply with Rule 2540 - Acid Rain Program within twelve months of commencing operation. [District Rule 2540]

9. The permittee shall obtain written District approval for the use of any equivalent equipment not specifically approved by this Authority to Construct. Approval of the equivalent equipment shall be made only after the District's determination that the submitted design and performance of the proposed alternate equipment is equivalent to the specifically authorized equipment. [District Rule 2201]

10. The permittee's request for approval of equivalent equipment shall include the make, model, manufacturer's maximum rating, manufacturer's guaranteed emission rates, equipment drawing(s), and operational characteristics/parameters. [District Rule 2201]

11. Alternate equipment shall be of the same class and category of source as the equipment authorized by the Authority to Construct. [District Rule 2201]

12. No emission factor and no emission shall be greater for the alternate equipment than for the proposed equipment. No changes in the hours of operation, operating rate, throughput, or firing rate may be authorized for any alternate equipment. [District Rule 2201]

13. {98} No air contaminant shall be released into the atmosphere which causes a public nuisance. [District Rule 4102]

14. {15} No air contaminant shall be discharged into the atmosphere for a period or periods aggregating more than three minutes in any one hour which is as dark as, or darker than, Ringelmann 1 or 20% opacity. [District Rule 4101]

15. {14} Particulate matter emissions shall not exceed 0.1 grains/dscf in concentration. [District Rule 4201]

16. The unit shall be fired solely on PUC-quality natural gas. [District Rule 2201]

17. Duration of startup and shutdown shall not exceed 2 hours each per occurrence. Refractory curing period is defined as a maintenance-based reduced-load period of time during which a unit is brought from a shutdown status to staged rates of firing for the sole purpose of curing new refractory lining of the unit, and shall not exceed 30 hours per occurrence. The operator shall maintain records of the duration of start-up, shutdown, and refractory curing periods. [District Rules 4305, 4306, and 4320]

18. Emissions from this unit, except during startup, shutdown, or refractory curing shall not exceed any of the following limits: NOx (as NO2): 5 ppmvd @ 3% O2 or 0.006 lb/MMBtu, SOx (as SO2): 0.00285 lb/MMBtu, PM10: 0.0076 lb/MMBtu, CO: 50.8 ppmvd @ 3% O2 or 0.037 lb/MMBtu, or VOC: 0.0040 lb/MMBtu. [District Rules 2201, 4305, 4306 and 4320]

19. Source testing to measure NOx and CO emissions shall be conducted within 60 days of initial operation under this ATC and whenever flue gas recirculation is changed. [District Rules 2201, 4305, 4306 and 4320]

20. This unit shall be tested for compliance with the NOx and CO emissions limits at least once every twelve (12) months. After demonstrating compliance on two (2) consecutive annual source tests, the unit shall be tested not less than once every thirty-six (36) months. If the result of the 36-month source test demonstrates that the unit does not meet the applicable emission limits, the source testing frequency shall revert to at least once every twelve (12) months. [District Rules 4305, 4306, and 4320]

21. {110} The results of each source test shall be submitted to the District within 60 days thereafter. [District Rule 1081]

DRAFT

CONDITIONS CONTINUE ON NEXT PAGE

22. {109} Source testing shall be conducted using the methods and procedures approved by the District. The District must be notified at least 30 days prior to any compliance source test, and a source test plan must be submitted for approval at least 15 days prior to testing. [District Rule 1081]

23. The source test plan shall identify which basis (ppmv or lb/MMBtu) will be used to demonstrate compliance. [District Rules 4305, 4306, and 4320]

24. The following test methods shall be used: NOx (ppmv) - EPA Method 7E or ARB Method 100, NOx (lb/MMBtu) - EPA Method 19, CO (ppmv) - EPA Method 10 or 10B or ARB Method 100, stack gas oxygen - EPA Method 3 or 3A or ARB Method 100, SOx (lb/MMBtu) - ARB Method 100 or EPA Method 6, 6C or fuel gas sulfur content analysis and EPA Method 19, fuel gas sulfur content - EPA Method 11 or 15, ASTM D3246 or double GC for H2S and mercaptans performed in a laboratory, fuel gas hhv - ASTM D1826 or D1945 in conjunction with ASTM D3588. [District Rule s 4305, 4306 and 4320]

25. The permittee shall monitor and record the stack concentration of NOx, CO, and O2 at least once every month (in which a source test is not performed) using a portable analyzer that meets District specifications. Monitoring shall not be required if the unit is not in operation, i.e. the unit need not be started solely to perform monitoring. Monitoring shall be performed within 5 days of restarting the unit unless monitoring has been performed within the last month. [District Rules 4305 and 4306]

26. If either the NOx or CO concentrations corrected to 3% O2, as measured by the portable analyzer, exceed the allowable emissions concentration, the permittee shall return the emissions to within the acceptable range as soon as possible, but no longer than 1 hour of operation after detection. If the portable analyzer readings continue to exceed the allowable emissions concentration after 1 hour of operation after detection, the permittee shall notify the District within the following 1 hour and conduct a certified source test within 60 days of the first exceedance. In lieu of conducting a source test, the permittee may stipulate a violation has occurred, subject to enforcement action. The permittee must then correct the violation, show compliance has been re-established, and resume monitoring procedures. If the deviations are the result of a qualifying breakdown condition pursuant to Rule 1100, the permittee may fully comply with Rule 1100 in lieu of performing the notification and testing required by this condition. [District Rules 4305, 4306, and 4320]

27. All alternate monitoring parameter emission readings shall be taken with the unit operating either at conditions representative of normal operations or conditions specified in the permit-to-operate. The analyzer shall be calibrated, maintained, and operated in accordance with the manufacturer's specifications and recommendations or a protocol approved by the APCO. Emission readings taken shall be averaged over a 15 consecutive-minute period by either taking a cumulative 15 consecutive-minute sample reading or by taking at least five (5) readings, evenly spaced out over the 15 consecutive-minute period. [District Rules 4305, 4306, and 4320]

28. The permittee shall maintain records of: (1) the date and time of NOx, CO, and O2 measurements, (2) the O2 concentration in percent by volume and the measured NOX and CO concentrations corrected to 3% O2, (3) make and model of exhaust gas analyzer, (4) exhaust gas analyzer calibration records, and (5) a description of any corrective action taken to maintain the emissions within the acceptable range. [District Rules 4305, 4306, and 4320]

29. For emissions source testing, the arithmetic average of three 30-consecutive-minute test runs shall apply. If two of three runs are above an applicable limit the test cannot be used to demonstrate compliance with an applicable limit. [District Rules 4305, 4306, and 4320]

30. The permittee shall maintain records of: (1) the date and time of NOx, CO, and O2 measurements, (2) the O2 concentration in percent by volume and the measured NOx and CO concentrations corrected to 3% O2, (3) make and model of exhaust gas analyzer, (4) exhaust gas analyzer calibration records, and (5) a description of any corrective action taken to maintain the emissions within the acceptable range. [District Rules 4305, 4306, and 4320]

31. All records shall be maintained and retained on-site for a minimum of five (5) years, and shall be made available for District inspection upon request. [District Rules 1070, 2201, 4305, 4306, and 4320]

32. {3433} Disturbances of soil related to any construction, demolition, excavation, extraction, or other earthmoving activities shall comply with the requirements for fugitive dust control in District Rule 8021 unless specifically exempted under Section 4.0 of Rule 8021 or Rule 8011. [District Rules 8011 and 8021]

DRAFT

CONDITIONS CONTINUE ON NEXT PAGE

33. {3434} An owner/operator shall submit a Dust Control Plan to the APCO prior to the start of any construction activity on any site that will include 10 acres or more of disturbed surface area for residential developments, or 5 acres or more of disturbed surface area for non-residential development, or will include moving, depositing, or relocating more than 2,500 cubic yards per day of bulk materials on at least three days. [District Rules 8011 and 8021]

34. {3435} An owner/operator shall prevent or cleanup any carryout or trackout in accordance with the requirements of District Rule 8041 Section 5.0, unless specifically exempted under Section 4.0 of Rule 8041 (8/19/04) or Rule 8011(8/19/04). [District Rules 8011 and 8021]

35. {3436} Whenever open areas are disturbed, or vehicles are used in open areas, the facility shall comply with the requirements of Section 5.0 of District Rule 8051, unless specifically exempted under Section 4.0 of Rule 8051 or Rule 8011. [District Rules 8011 and 8051]

36. {3437} Any paved road or unpaved road shall comply with the requirements of District Rule 8061 unless specifically exempted under Section 4.0 of Rule 8061 or Rule 8011. [District Rules 8011 and 8061]

37. {3438} Water, gravel, roadmix, or chemical/organic dust stabilizers/suppressants, vegetative materials, or other District-approved control measure shall be applied to unpaved vehicle travel areas as required to limit Visible Dust Emissions to 20% opacity and comply with the requirements for a stabilized unpaved road as defined in Section 3.59 of District Rule 8011. [District Rule 8011 and 8071]

38. {3439} Where dusting materials are allowed to accumulate on paved surfaces, the accumulation shall be removed daily or water and/or chemical/organic dust stabilizers/suppressants shall be applied to the paved surface as required to maintain continuous compliance with the requirements for a stabilized unpaved road as defined in Section 3.59 of District Rule 8011 and limit Visible Dust Emissions (VDE) to 20% opacity. [District Rule 8011 and 8071]

39. {3440} On each day that 50 or more Vehicle Daily Trips or 25 or more Vehicle Daily Trips with 3 axles or more will occur on an unpaved vehicle/equipment traffic area, permittee shall apply water, gravel, roadmix, or chemical/organic dust stabilizers/suppressants, vegetative materials, or other District-approved control measure as required to limit Visible Dust Emissions to 20% opacity and comply with the requirements for a stabilized unpaved road as defined in Section 3.59 of District Rule 8011. [District Rule 8011 and 8071]

40. {3441} Whenever any portion of the site becomes inactive, Permittee shall restrict access and periodically stabilize any disturbed surface to comply with the conditions for a stabilized surface as defined in Section 3.58 of District Rule 8011. [District Rules 8011 and 8071]

41. {3442} Records and other supporting documentation shall be maintained as required to demonstrate compliance with the requirements of the rules under Regulation VIII only for those days that a control measure was implemented. Such records shall include the type of control measure(s) used, the location and extent of coverage, and the date, amount, and frequency of application of dust suppressant, manufacturer's dust suppressant product information sheet that identifies the name of the dust suppressant and application instructions. Records shall be kept for one year following project completion that results in the termination of all dust generating activities. [District Rules 8011, 8031, and 8071]

DRAFT

San Joaquin Valley
Air Pollution Control District

AUTHORITY TO CONSTRUCT

DRAFT

PERMIT NO: S-7616-14-0

ISSUANCE DATE: DRAFT

LEGAL OWNER OR OPERATOR: HYDROGEN ENERGY CALIFORNIA, LLC
MAILING ADDRESS: ONE WORLD TRADE CENTER
SUITE 1600
LONG BEACH, CA 90831-1600

LOCATION: SEC 10 T30S R 24E
TUPMAN, CA

EQUIPMENT DESCRIPTION:
2,922 BHP CUMMINS MODEL QSK60-G6 TIER 4 CERTIFIED DIESEL-FIRED EMERGENCY STANDBY IC ENGINE POWERING A 2,000 KW CUMMINS MODEL DQKC ELECTRIC GENERATOR, #1 (OR EQUIVALENT)

CONDITIONS

1. The permittee shall enter into an Air Quality Mitigation Settlement Agreement with the District prior to issuance of the Final Determination of Compliance, or such other time that is mutually agreeable.
2. The permittee shall obtain written District approval for the use of any equivalent equipment not specifically approved by this Authority to Construct. Approval of the equivalent equipment shall be made only after the District's determination that the submitted design and performance of the proposed alternate equipment is equivalent to the specifically authorized equipment. [District Rule 2201]
3. The permittee's request for approval of equivalent equipment shall include the make, model, manufacturer's maximum rating, manufacturer's guaranteed emission rates, equipment drawing(s), and operational characteristics/parameters. [District Rule 2201]
4. Alternate equipment shall be of the same class and category of source as the equipment authorized by the Authority to Construct. [District Rule 2201]
5. No emission factor and no emission shall be greater for the alternate equipment than for the proposed equipment. No changes in the hours of operation, operating rate, throughput, or firing rate may be authorized for any alternate equipment. [District Rule 2201]
6. {98} No air contaminant shall be released into the atmosphere which causes a public nuisance. [District Rule 4102]
7. {14} Particulate matter emissions shall not exceed 0.1 grains/dscf in concentration. [District Rule 4201]

CONDITIONS CONTINUE ON NEXT PAGE

YOU MUST NOTIFY THE DISTRICT COMPLIANCE DIVISION AT (661) 392-5500 WHEN CONSTRUCTION IS COMPLETED AND PRIOR TO OPERATING THE EQUIPMENT OR MODIFICATIONS AUTHORIZED BY THIS AUTHORITY TO CONSTRUCT. This is NOT a PERMIT TO OPERATE. Approval or denial of a PERMIT TO OPERATE will be made after an inspection to verify that the equipment has been constructed in accordance with the approved plans, specifications and conditions of this Authority to Construct, and to determine if the equipment can be operated in compliance with all Rules and Regulations of the San Joaquin Valley Unified Air Pollution Control District. Unless construction has commenced pursuant to Rule 2050, this Authority to Construct shall expire and application shall be cancelled two years from the date of issuance. The applicant is responsible for complying with all laws, ordinances and regulations of all other governmental agencies which may pertain to the above equipment.

Seyed Sadredin, Executive Director / APCO

DRAFT

DAVID WARNER, Director of Permit Services
S-7616-14-0 : Jun 16 2010 2:07PM -- RAMIREZH : Joint Inspection NOT Required

8. {15} No air contaminant shall be discharged into the atmosphere for a period or periods aggregating more than three minutes in any one hour which is as dark as, or darker than, Ringelmann 1 or 20% opacity. [District Rule 4101]

9. {1898} The exhaust stack shall vent vertically upward. The vertical exhaust flow shall not be impeded by a rain cap (flapper ok), roof overhang, or any other obstruction. [District Rule 4102]

10. {3395} Only CARB certified diesel fuel containing not more than 0.0015% sulfur by weight is to be used. [District Rules 2201 and 4801 and 17 CCR 93115]

11. {3404} This engine shall be equipped with an operational non-resettable elapsed time meter or other APCO approved alternative. [District Rule 4702]

12. {3807} An emergency situation is an unscheduled electrical power outage caused by sudden and reasonably unforeseen natural disasters or sudden and reasonably unforeseen events beyond the control of the permittee. [District Rule 4702]

13. Emissions from this IC engine shall not exceed any of the following limits: 0.5 g-NOx/bhp-hr, 2.6 g-CO/bhp-hr, or 0.3 g-VOC/bhp-hr. [District Rule 2201 and 13 CCR 2423 and 17 CCR 93115]

14. Emissions from this IC engine shall not exceed 0.07 g-PM10/bhp-hr based on USEPA certification using ISO 8178 test procedure. [District Rules 2201 and 4102 and 13 CCR 2423 and 17 CCR 93115]

15. {3810} This engine shall be operated only for testing and maintenance of the engine, required regulatory purposes, and during emergency situations. Operation of the engine for maintenance, testing, and required regulatory purposes shall not exceed 50 hours per calendar year. [District Rule 4702 and 17 CCR 93115]

16. {3489} The permittee shall maintain monthly records of emergency and non-emergency operation. Records shall include the number of hours of emergency operation, the date and number of hours of all testing and maintenance operations, and the purpose of the operation (for example: load testing, weekly testing, rolling blackout, general area power outage, etc.). For units with automated testing systems, the operator may, as an alternative to keeping records of actual operation for testing purposes, maintain a readily accessible written record of the automated testing schedule. [District Rule 4702 and 17 CCR 93115]

17. {3475} All records shall be maintained and retained on-site for a minimum of five (5) years, and shall be made available for District inspection upon request. [District Rule 4702 and 17 CCR 93115]

18. {3433} Disturbances of soil related to any construction, demolition, excavation, extraction, or other earthmoving activities shall comply with the requirements for fugitive dust control in District Rule 8021 unless specifically exempted under Section 4.0 of Rule 8021 or Rule 8011. [District Rules 8011 and 8021]

19. {3434} An owner/operator shall submit a Dust Control Plan to the APCO prior to the start of any construction activity on any site that will include 10 acres or more of disturbed surface area for residential developments, or 5 acres or more of disturbed surface area for non-residential development, or will include moving, depositing, or relocating more than 2,500 cubic yards per day of bulk materials on at least three days. [District Rules 8011 and 8021]

20. {3435} An owner/operator shall prevent or cleanup any carryout or trackout in accordance with the requirements of District Rule 8041 Section 5.0, unless specifically exempted under Section 4.0 of Rule 8041 (8/19/04) or Rule 8011(8/19/04). [District Rules 8011 and 8021]

21. {3436} Whenever open areas are disturbed, or vehicles are used in open areas, the facility shall comply with the requirements of Section 5.0 of District Rule 8051, unless specifically exempted under Section 4.0 of Rule 8051 or Rule 8011. [District Rules 8011 and 8051]

22. {3437} Any paved road or unpaved road shall comply with the requirements of District Rule 8061 unless specifically exempted under Section 4.0 of Rule 8061 or Rule 8011. [District Rules 8011 and 8061]

23. {3438} Water, gravel, roadmix, or chemical/organic dust stabilizers/suppressants, vegetative materials, or other District-approved control measure shall be applied to unpaved vehicle travel areas as required to limit Visible Dust Emissions to 20% opacity and comply with the requirements for a stabilized unpaved road as defined in Section 3.59 of District Rule 8011. [District Rule 8011 and 8071]

DRAFT

CONDITIONS CONTINUE ON NEXT PAGE

24. {3439} Where dusting materials are allowed to accumulate on paved surfaces, the accumulation shall be removed daily or water and/or chemical/organic dust stabilizers/suppressants shall be applied to the paved surface as required to maintain continuous compliance with the requirements for a stabilized unpaved road as defined in Section 3.59 of District Rule 8011 and limit Visible Dust Emissions (VDE) to 20% opacity. [District Rule 8011 and 8071]

25. {3440} On each day that 50 or more Vehicle Daily Trips or 25 or more Vehicle Daily Trips with 3 axles or more will occur on an unpaved vehicle/equipment traffic area, permittee shall apply water, gravel, roadmix, or chemical/organic dust stabilizers/suppressants, vegetative materials, or other District-approved control measure as required to limit Visible Dust Emissions to 20% opacity and comply with the requirements for a stabilized unpaved road as defined in Section 3.59 of District Rule 8011. [District Rule 8011 and 8071]

26. {3441} Whenever any portion of the site becomes inactive, Permittee shall restrict access and periodically stabilize any disturbed surface to comply with the conditions for a stabilized surface as defined in Section 3.58 of District Rule 8011. [District Rules 8011 and 8071]

27. {3442} Records and other supporting documentation shall be maintained as required to demonstrate compliance with the requirements of the rules under Regulation VIII only for those days that a control measure was implemented. Such records shall include the type of control measure(s) used, the location and extent of coverage, and the date, amount, and frequency of application of dust suppressant, manufacturer's dust suppressant product information sheet that identifies the name of the dust suppressant and application instructions. Records shall be kept for one year following project completion that results in the termination of all dust generating activities. [District Rules 8011, 8031, and 8071]

DRAFT

San Joaquin Valley
Air Pollution Control District

AUTHORITY TO CONSTRUCT

DRAFT

PERMIT NO: S-7616-15-0

ISSUANCE DATE: DRAFT

LEGAL OWNER OR OPERATOR: HYDROGEN ENERGY CALIFORNIA, LLC
MAILING ADDRESS: ONE WORLD TRADE CENTER
SUITE 1600
LONG BEACH, CA 90831-1600

LOCATION: SEC 10 T30S R 24E
TUPMAN, CA

EQUIPMENT DESCRIPTION:
2,922 BHP CUMMINS MODEL QSK60-G6 TIER 4 CERTIFIED DIESEL-FIRED EMERGENCY STANDBY IC ENGINE POWERING A 2,000 KW CUMMINS MODEL DQKC ELECTRIC GENERATOR, #2 (OR EQUIVALENT)

CONDITIONS

1. The permittee shall enter into an Air Quality Mitigation Settlement Agreement with the District prior to issuance of the Final Determination of Compliance, or such other time that is mutually agreeable.
2. The permittee shall obtain written District approval for the use of any equivalent equipment not specifically approved by this Authority to Construct. Approval of the equivalent equipment shall be made only after the District's determination that the submitted design and performance of the proposed alternate equipment is equivalent to the specifically authorized equipment. [District Rule 2201]
3. The permittee's request for approval of equivalent equipment shall include the make, model, manufacturer's maximum rating, manufacturer's guaranteed emission rates, equipment drawing(s), and operational characteristics/parameters. [District Rule 2201]
4. Alternate equipment shall be of the same class and category of source as the equipment authorized by the Authority to Construct. [District Rule 2201]
5. No emission factor and no emission shall be greater for the alternate equipment than for the proposed equipment. No changes in the hours of operation, operating rate, throughput, or firing rate may be authorized for any alternate equipment. [District Rule 2201]
6. {98} No air contaminant shall be released into the atmosphere which causes a public nuisance. [District Rule 4102]
7. {14} Particulate matter emissions shall not exceed 0.1 grains/dscf in concentration. [District Rule 4201]

CONDITIONS CONTINUE ON NEXT PAGE

YOU MUST NOTIFY THE DISTRICT COMPLIANCE DIVISION AT (661) 392-5500 WHEN CONSTRUCTION IS COMPLETED AND PRIOR TO OPERATING THE EQUIPMENT OR MODIFICATIONS AUTHORIZED BY THIS AUTHORITY TO CONSTRUCT. This is NOT a PERMIT TO OPERATE. Approval or denial of a PERMIT TO OPERATE will be made after an inspection to verify that the equipment has been constructed in accordance with the approved plans, specifications and conditions of this Authority to Construct, and to determine if the equipment can be operated in compliance with all Rules and Regulations of the San Joaquin Valley Unified Air Pollution Control District. Unless construction has commenced pursuant to Rule 2050, this Authority to Construct shall expire and application shall be cancelled two years from the date of issuance. The applicant is responsible for complying with all laws, ordinances and regulations of all other governmental agencies which may pertain to the above equipment.

Seyed Sadredin, Executive Director / APCO

DRAFT

DAVID WARNER, Director of Permit Services
S-7616-15-0 : Jun 16 2010 2:08PM -- RAMIREZH : Joint Inspection NOT Required

8. {15} No air contaminant shall be discharged into the atmosphere for a period or periods aggregating more than three minutes in any one hour which is as dark as, or darker than, Ringelmann 1 or 20% opacity. [District Rule 4101]

9. {1898} The exhaust stack shall vent vertically upward. The vertical exhaust flow shall not be impeded by a rain cap (flapper ok), roof overhang, or any other obstruction. [District Rule 4102]

10. {3395} Only CARB certified diesel fuel containing not more than 0.0015% sulfur by weight is to be used. [District Rules 2201 and 4801 and 17 CCR 93115]

11. {3404} This engine shall be equipped with an operational non-resettable elapsed time meter or other APCO approved alternative. [District Rule 4702]

12. {3807} An emergency situation is an unscheduled electrical power outage caused by sudden and reasonably unforeseen natural disasters or sudden and reasonably unforeseen events beyond the control of the permittee. [District Rule 4702]

13. Emissions from this IC engine shall not exceed any of the following limits: 0.5 g-NOx/bhp-hr, 2.6 g-CO/bhp-hr, or 0.3 g-VOC/bhp-hr. [District Rule 2201 and 13 CCR 2423 and 17 CCR 93115]

14. Emissions from this IC engine shall not exceed 0.07 g-PM10/bhp-hr based on USEPA certification using ISO 8178 test procedure. [District Rules 2201 and 4102 and 13 CCR 2423 and 17 CCR 93115]

15. {3810} This engine shall be operated only for testing and maintenance of the engine, required regulatory purposes, and during emergency situations. Operation of the engine for maintenance, testing, and required regulatory purposes shall not exceed 50 hours per calendar year. [District Rule 4702 and 17 CCR 93115]

16. {3489} The permittee shall maintain monthly records of emergency and non-emergency operation. Records shall include the number of hours of emergency operation, the date and number of hours of all testing and maintenance operations, and the purpose of the operation (for example: load testing, weekly testing, rolling blackout, general area power outage, etc.). For units with automated testing systems, the operator may, as an alternative to keeping records of actual operation for testing purposes, maintain a readily accessible written record of the automated testing schedule. [District Rule 4702 and 17 CCR 93115]

17. {3475} All records shall be maintained and retained on-site for a minimum of five (5) years, and shall be made available for District inspection upon request. [District Rule 4702 and 17 CCR 93115]

18. {3433} Disturbances of soil related to any construction, demolition, excavation, extraction, or other earthmoving activities shall comply with the requirements for fugitive dust control in District Rule 8021 unless specifically exempted under Section 4.0 of Rule 8021 or Rule 8011. [District Rules 8011 and 8021]

19. {3434} An owner/operator shall submit a Dust Control Plan to the APCO prior to the start of any construction activity on any site that will include 10 acres or more of disturbed surface area for residential developments, or 5 acres or more of disturbed surface area for non-residential development, or will include moving, depositing, or relocating more than 2,500 cubic yards per day of bulk materials on at least three days. [District Rules 8011 and 8021]

20. {3435} An owner/operator shall prevent or cleanup any carryout or trackout in accordance with the requirements of District Rule 8041 Section 5.0, unless specifically exempted under Section 4.0 of Rule 8041 (8/19/04) or Rule 8011(8/19/04). [District Rules 8011 and 8021]

21. {3436} Whenever open areas are disturbed, or vehicles are used in open areas, the facility shall comply with the requirements of Section 5.0 of District Rule 8051, unless specifically exempted under Section 4.0 of Rule 8051 or Rule 8011. [District Rules 8011 and 8051]

22. {3437} Any paved road or unpaved road shall comply with the requirements of District Rule 8061 unless specifically exempted under Section 4.0 of Rule 8061 or Rule 8011. [District Rules 8011 and 8061]

23. {3438} Water, gravel, roadmix, or chemical/organic dust stabilizers/suppressants, vegetative materials, or other District-approved control measure shall be applied to unpaved vehicle travel areas as required to limit Visible Dust Emissions to 20% opacity and comply with the requirements for a stabilized unpaved road as defined in Section 3.59 of District Rule 8011. [District Rule 8011 and 8071]

DRAFT

CONDITIONS CONTINUE ON NEXT PAGE

24. {3439} Where dusting materials are allowed to accumulate on paved surfaces, the accumulation shall be removed daily or water and/or chemical/organic dust stabilizers/suppressants shall be applied to the paved surface as required to maintain continuous compliance with the requirements for a stabilized unpaved road as defined in Section 3.59 of District Rule 8011 and limit Visible Dust Emissions (VDE) to 20% opacity. [District Rule 8011 and 8071]

25. {3440} On each day that 50 or more Vehicle Daily Trips or 25 or more Vehicle Daily Trips with 3 axles or more will occur on an unpaved vehicle/equipment traffic area, permittee shall apply water, gravel, roadmix, or chemical/organic dust stabilizers/suppressants, vegetative materials, or other District-approved control measure as required to limit Visible Dust Emissions to 20% opacity and comply with the requirements for a stabilized unpaved road as defined in Section 3.59 of District Rule 8011. [District Rule 8011 and 8071]

26. {3441} Whenever any portion of the site becomes inactive, Permittee shall restrict access and periodically stabilize any disturbed surface to comply with the conditions for a stabilized surface as defined in Section 3.58 of District Rule 8011. [District Rules 8011 and 8071]

27. {3442} Records and other supporting documentation shall be maintained as required to demonstrate compliance with the requirements of the rules under Regulation VIII only for those days that a control measure was implemented. Such records shall include the type of control measure(s) used, the location and extent of coverage, and the date, amount, and frequency of application of dust suppressant, manufacturer's dust suppressant product information sheet that identifies the name of the dust suppressant and application instructions. Records shall be kept for one year following project completion that results in the termination of all dust generating activities. [District Rules 8011, 8031, and 8071]

DRAFT

San Joaquin Valley
Air Pollution Control District

AUTHORITY TO CONSTRUCT

DRAFT

PERMIT NO: S-7616-16-0

ISSUANCE DATE: DRAFT

LEGAL OWNER OR OPERATOR: HYDROGEN ENERGY CALIFORNIA, LLC
MAILING ADDRESS: ONE WORLD TRADE CENTER
SUITE 1600
LONG BEACH, CA 90831-1600

LOCATION: SEC 10 T30S R 24E
TUPMAN, CA

EQUIPMENT DESCRIPTION:
556 BHP CUMMINS MODEL CFP-15E-F40 TIER 4 CERTIFIED DIESEL-FIRED EMERGENCY STANDBY IC ENGINE POWERING A FIREWATER PUMP (OR EQUIVALENT)

CONDITIONS

1. The permittee shall enter into an Air Quality Mitigation Settlement Agreement with the District prior to issuance of the Final Determination of Compliance, or such other time that is mutually agreeable.
2. The permittee shall obtain written District approval for the use of any equivalent equipment not specifically approved by this Authority to Construct. Approval of the equivalent equipment shall be made only after the District's determination that the submitted design and performance of the proposed alternate equipment is equivalent to the specifically authorized equipment. [District Rule 2201]
3. The permittee's request for approval of equivalent equipment shall include the make, model, manufacturer's maximum rating, manufacturer's guaranteed emission rates, equipment drawing(s), and operational characteristics/parameters. [District Rule 2201]
4. Alternate equipment shall be of the same class and category of source as the equipment authorized by the Authority to Construct. [District Rule 2201]
5. No emission factor and no emission shall be greater for the alternate equipment than for the proposed equipment. No changes in the hours of operation, operating rate, throughput, or firing rate may be authorized for any alternate equipment. [District Rule 2201]
6. {98} No air contaminant shall be released into the atmosphere which causes a public nuisance. [District Rule 4102]
7. {14} Particulate matter emissions shall not exceed 0.1 grains/dscf in concentration. [District Rule 4201]

CONDITIONS CONTINUE ON NEXT PAGE

YOU MUST NOTIFY THE DISTRICT COMPLIANCE DIVISION AT (661) 392-5500 WHEN CONSTRUCTION IS COMPLETED AND PRIOR TO OPERATING THE EQUIPMENT OR MODIFICATIONS AUTHORIZED BY THIS AUTHORITY TO CONSTRUCT. This is NOT a PERMIT TO OPERATE. Approval or denial of a PERMIT TO OPERATE will be made after an inspection to verify that the equipment has been constructed in accordance with the approved plans, specifications and conditions of this Authority to Construct, and to determine if the equipment can be operated in compliance with all Rules and Regulations of the San Joaquin Valley Unified Air Pollution Control District. Unless construction has commenced pursuant to Rule 2050, this Authority to Construct shall expire and application shall be cancelled two years from the date of issuance. The applicant is responsible for complying with all laws, ordinances and regulations of all other governmental agencies which may pertain to the above equipment.

Seyed Sadredin, Executive Director/APCO

DRAFT

DAVID WARNER, Director of Permit Services
S-7616-16-0 : Jun 16 2010 2:08PM – RAMIREZH : Joint Inspection NOT Required

8. {15} No air contaminant shall be discharged into the atmosphere for a period or periods aggregating more than three minutes in any one hour which is as dark as, or darker than, Ringelmann 1 or 20% opacity. [District Rule 4101]

9. {1898} The exhaust stack shall vent vertically upward. The vertical exhaust flow shall not be impeded by a rain cap (flapper ok), roof overhang, or any other obstruction. [District Rule 4102]

10. {3395} Only CARB certified diesel fuel containing not more than 0.0015% sulfur by weight is to be used. [District Rules 2201 and 4801 and 17 CCR 93115]

11. {3404} This engine shall be equipped with an operational non-resettable elapsed time meter or other APCO approved alternative. [District Rule 4702]

12. {3807} An emergency situation is an unscheduled electrical power outage caused by sudden and reasonably unforeseen natural disasters or sudden and reasonably unforeseen events beyond the control of the permittee. [District Rule 4702]

13. Emissions from this IC engine shall not exceed any of the following limits: 1.5 g-NOx/bhp-hr, 2.6 g-CO/bhp-hr, or 0.14 g-VOC/bhp-hr. [District Rule 2201 and 13 CCR 2423 and 17 CCR 93115]

14. Emissions from this IC engine shall not exceed 0.01 g-PM10/bhp-hr based on USEPA certification using ISO 8178 test procedure. [District Rules 2201 and 4102 and 13 CCR 2423 and 17 CCR 93115]

15. {3816} This engine shall be operated only for testing and maintenance of the engine, required regulatory purposes, and during emergency situations. For testing purposes, the engine shall only be operated the number of hours necessary to comply with the testing requirements of the National Fire Protection Association (NFPA) 25 - "Standard for the Inspection, Testing, and Maintenance of Water-Based Fire Protection Systems", 1998 edition. Total hours of operation for all maintenance, testing, and required regulatory purposes shall not exceed 100 hours per calendar year. [District Rule 4702 and 17 CCR 93115]

16. {3488} This engine shall be operated only for maintenance, testing, required regulatory purposes, and during emergency situations. For testing purposes, the engine shall only be operated the number of hours necessary to comply with the testing requirements of the National Fire Protection Association (NFPA) 25 - "Standard for the Inspection, Testing, and Maintenance of Water-Based Fire Protection Systems", 1998 edition. Total hours of operation for all maintenance, testing, and required regulatory purposes shall not exceed 100 hours per calendar year. [District Rule 4702 and 17 CCR 93115]

17. {3489} The permittee shall maintain monthly records of emergency and non-emergency operation. Records shall include the number of hours of emergency operation, the date and number of hours of all testing and maintenance operations, and the purpose of the operation (for example: load testing, weekly testing, rolling blackout, general area power outage, etc.). For units with automated testing systems, the operator may, as an alternative to keeping records of actual operation for testing purposes, maintain a readily accessible written record of the automated testing schedule. [District Rule 4702 and 17 CCR 93115]

18. {3475} All records shall be maintained and retained on-site for a minimum of five (5) years, and shall be made available for District inspection upon request. [District Rule 4702 and 17 CCR 93115]

19. {3433} Disturbances of soil related to any construction, demolition, excavation, extraction, or other earthmoving activities shall comply with the requirements for fugitive dust control in District Rule 8021 unless specifically exempted under Section 4.0 of Rule 8021 or Rule 8011. [District Rules 8011 and 8021]

20. {3434} An owner/operator shall submit a Dust Control Plan to the APCO prior to the start of any construction activity on any site that will include 10 acres or more of disturbed surface area for residential developments, or 5 acres or more of disturbed surface area for non-residential development, or will include moving, depositing, or relocating more than 2,500 cubic yards per day of bulk materials on at least three days. [District Rules 8011 and 8021]

21. {3435} An owner/operator shall prevent or cleanup any carryout or trackout in accordance with the requirements of District Rule 8041 Section 5.0, unless specifically exempted under Section 4.0 of Rule 8041 (8/19/04) or Rule 8011(8/19/04). [District Rules 8011 and 8021]

22. {3436} Whenever open areas are disturbed, or vehicles are used in open areas, the facility shall comply with the requirements of Section 5.0 of District Rule 8051, unless specifically exempted under Section 4.0 of Rule 8051 or Rule 8011. [District Rules 8011 and 8051]

DRAFT

CONDITIONS CONTINUE ON NEXT PAGE

23. {3437} Any paved road or unpaved road shall comply with the requirements of District Rule 8061 unless specifically exempted under Section 4.0 of Rule 8061 or Rule 8011. [District Rules 8011 and 8061]

24. {3438} Water, gravel, roadmix, or chemical/organic dust stabilizers/suppressants, vegetative materials, or other District-approved control measure shall be applied to unpaved vehicle travel areas as required to limit Visible Dust Emissions to 20% opacity and comply with the requirements for a stabilized unpaved road as defined in Section 3.59 of District Rule 8011. [District Rule 8011 and 8071]

25. {3439} Where dusting materials are allowed to accumulate on paved surfaces, the accumulation shall be removed daily or water and/or chemical/organic dust stabilizers/suppressants shall be applied to the paved surface as required to maintain continuous compliance with the requirements for a stabilized unpaved road as defined in Section 3.59 of District Rule 8011 and limit Visible Dust Emissions (VDE) to 20% opacity. [District Rule 8011 and 8071]

26. {3440} On each day that 50 or more Vehicle Daily Trips or 25 or more Vehicle Daily Trips with 3 axles or more will occur on an unpaved vehicle/equipment traffic area, permittee shall apply water, gravel, roadmix, or chemical/organic dust stabilizers/suppressants, vegetative materials, or other District-approved control measure as required to limit Visible Dust Emissions to 20% opacity and comply with the requirements for a stabilized unpaved road as defined in Section 3.59 of District Rule 8011. [District Rule 8011 and 8071]

27. {3441} Whenever any portion of the site becomes inactive, Permittee shall restrict access and periodically stabilize any disturbed surface to comply with the conditions for a stabilized surface as defined in Section 3.58 of District Rule 8011. [District Rules 8011 and 8071]

28. {3442} Records and other supporting documentation shall be maintained as required to demonstrate compliance with the requirements of the rules under Regulation VIII only for those days that a control measure was implemented. Such records shall include the type of control measure(s) used, the location and extent of coverage, and the date, amount, and frequency of application of dust suppressant, manufacturer's dust suppressant product information sheet that identifies the name of the dust suppressant and application instructions. Records shall be kept for one year following project completion that results in the termination of all dust generating activities. [District Rules 8011, 8031, and 8071]

DRAFT

APPENDIX B
BACT Guidelines

San Joaquin Valley
Unified Air Pollution Control District

Best Available Control Technology (BACT) Guideline 1.4.8*

Last Update: 9/1/2006

Refinery Flare

Pollutant	Achieved in Practice or contained in the SIP	Technologically Feasible	Alternate Basic Equipment
CO	Engineered flare, with air or steam assisted combustion, staged combustion, and/or equivalent District approved controls. Flare shall be equipped with a flare gas recovery system for non-emergency releases.		
NOx	Engineered flare, with air or steam assisted combustion, staged combustion, and/or equivalent District approved controls. Flare shall be equipped with a flare gas recovery system for non-emergency releases.	Engineered flare or enclosed burner with air or steam assisted combustion, staged combustion, and/or equivalent District approved controls, and having demonstrated emissions of NOx of less than 0.068 lb/MM Btu. Flare shall be equipped with a flare gas recovery system for non-emergency releases.	
PM10	Engineered flare designed for and operated without visible emissions, except as allowed by 40CFR 60.18(c)(1) and District Rule 4101 and equipped with air or steam assisted combustion, staged combustion, and/or equivalent District approved controls. Flare shall be equipped with a flare gas recovery system for non-emergency releases. Pilot and sweep fuel shall be natural gas, treated refinery gas or LPG.		
SOx	Flare shall be equipped with a flare gas recovery system for non-emergency releases. Pilot and purge gas shall be natural gas, treated refinery gas or LPG.		

San Joaquin Valley
Unified Air Pollution Control District

Best Available Control Technology (BACT) Guideline 3.1.1*

Last Update: 7/10/2009

Emergency Diesel IC engine

Pollutant	Achieved in Practice or contained in the SIP	Technologically Feasible	Alternate Basic Equipment
CO	Latest EPA Tier Certification level for applicable horsepower range		
NOX	Latest EPA Tier Certification level for applicable horsepower range		
PM10	0.15 g/hp-hr or the Latest EPA Tier Certification level for applicable horsepower range, whichever is more stringent. (ATCM)		
SOX	Very low sulfur diesel fuel (15 ppmw sulfur or less)		
VOC	Latest EPA Tier Certification level for applicable horsepower range		

BACT is the most stringent control technique for the emissions unit and class of source. Control techniques that are not achieved in practice or contained in s a state implementation plan must be cost effective as well as feasible. Economic analysis to demonstrate cost effectiveness is requried for all determinations that are not achieved in practice or contained in an EPA approved State Implementation Plan.

***This is a Summary Page for this Class of Source - Permit Specific BACT Determinations on Next Page(s)**

San Joaquin Valley
Unified Air Pollution Control District

Best Available Control Technology (BACT) Guideline 4.12.2*

Last Update: 11/27/2006

Chemical Plants Pump and Compressor Seals

Pollutant	Achieved in Practice or contained in the SIP	Technologically Feasible	Alternate Basic Equipment
VOC	Leak defined as a reading of methane in excess of 500 ppmv above background when measure per EPA Method 21 and an Inspection and Maintenance Program pursuant to District Rule 4455		

BACT is the most stringent control technique for the emissions unit and class of source. Control techniques that are not achieved in practice or contained in s a state implementation plan must be cost effective as well as feasible. Economic analysis to demonstrate cost effectiveness is requried for all determinations that are not achieved in practice or contained in an EPA approved State Implementation Plan.

***This is a Summary Page for this Class of Source - Permit Specific BACT Determinations on Next Page(s)**

San Joaquin Valley
Unified Air Pollution Control District

Best Available Control Technology (BACT) Guideline 4.12.1*

Last Update: 11/26/2006

Chemical Plants - Valves & Connectors

Pollutant	Achieved in Practice or contained in the SIP	Technologically Feasible	Alternate Basic Equipment
VOC	Leak defined as a reading of methane in excess of 100 ppmv above background when measured per EPA Method 21 and Maintenance Program pursuant to District Rule 4455		

BACT is the most stringent control technique for the emissions unit and class of source. Control techniques that are not achieved in practice or contained in s a state implementation plan must be cost effective as well as feasible. Economic analysis to demonstrate cost effectiveness is requried for all determinations that are not achieved in practice or contained in an EPA approved State Implementation Plan.

***This is a Summary Page for this Class of Source - Permit Specific BACT Determinations on Next Page(s)**

San Joaquin Valley
Unified Air Pollution Control District

Best Available Control Technology (BACT) Guideline 7.2.6*

Last Update: 11/1/2000

Petroleum Refineries and Chemical Plants - Diesel Fuel Processing, Sulfur Recovery Plant, = or > 20 tons Sulfur/day

Pollutant	Achieved in Practice or contained in the SIP	Technologically Feasible	Alternate Basic Equipment
SOx	Sulfur Recovery Unit with tail gas treating unit to treat gas to = or < 10 ppmv H2S (based on a three-hour, moving average) and a standby incinerator - except during startup and shutdown.	Sulfur recovery unit with two tail gas treating units in parallel (one as standby) to treat gas to = or < 10 ppmv H2S (based on a three-hour, moving average) and a standby incinerator - except during startup and shutdown.	

BACT is the most stringent control technique for the emissions unit and class of source. Control techniques that are not achieved in practice or contained in s a state implementation plan must be cost effective as well as feasible. Economic analysis to demonstrate cost effectiveness is requried for all determinations that are not achieved in practice or contained in an EPA approved State Implementation Plan.

***This is a Summary Page for this Class of Source - Permit Specific BACT Determinations on Next Page(s)**

San Joaquin Valley
Unified Air Pollution Control District

Best Available Control Technology (BACT) Guideline 8.2.1*

Last Update: 3/25/1995

Petroleum Coke Handling - Receiving, Storage, and Loadout = or > 1,000 tons coke per day

Pollutant	Achieved in Practice or contained in the SIP	Technologically Feasible	Alternate Basic Equipment
PM10	Adequate moisture content of coke received, and loaded out, to prevent visible emissions in excess of 5% opacity. Water and surfactant applied to storage piles.		

BACT is the most stringent control technique for the emissions unit and class of source. Control techniques that are not achieved in practice or contained in s a state implementation plan must be cost effective as well as feasible. Economic analysis to demonstrate cost effectiveness is requried for all determinations that are not achieved in practice or contained in an EPA approved State Implementation Plan.

***This is a Summary Page for this Class of Source - Permit Specific BACT Determinations on Next Page(s)**

San Joaquin Valley
Unified Air Pollution Control District

Best Available Control Technology (BACT) Guideline 8.4.1*

Last Update: 10/20/1992

Dry Material Storage and Conveying Operation, 100 tons/day

Pollutant	Achieved in Practice or contained in the SIP	Technologically Feasible	Alternate Basic Equipment
PM10	Storage, augers, elevators, conveyors all enclosed and vented to a fabric filter baghouse		

BACT is the most stringent control technique for the emissions unit and class of source. Control techniques that are not achieved in practice or contained in s a state implementation plan must be cost effective as well as feasible. Economic analysis to demonstrate cost effectiveness is requried for all determinations that are not achieved in practice or contained in an EPA approved State Implementation Plan.

***This is a Summary Page for this Class of Source - Permit Specific BACT Determinations on Next Page(s)**

San Joaquin Valley
Unified Air Pollution Control District

Best Available Control Technology (BACT) Guideline 8.4.2*

Last Update: 9/29/1992

Wet Material Storage and Conveying Operation, 200 tons/day

Pollutant	Achieved in Practice or contained in the SIP	Technologically Feasible	Alternate Basic Equipment
PM10	Enclosed storage with sufficient moisture so visible emissions are less than 5% opacity from any single emission point		

BACT is the most stringent control technique for the emissions unit and class of source. Control techniques that are not achieved in practice or contained in s a state implementation plan must be cost effective as well as feasible. Economic analysis to demonstrate cost effectiveness is requried for all determinations that are not achieved in practice or contained in an EPA approved State Implementation Plan.

***This is a Summary Page for this Class of Source - Permit Specific BACT Determinations on Next Page(s)**

San Joaquin Valley
Unified Air Pollution Control District

Best Available Control Technology (BACT) Guideline 8.4.3*

Last Update: 7/16/1998

Dry Material Handling - Mixing, Blending, Milling, or Storage

Pollutant	Achieved in Practice or contained in the SIP	Technologically Feasible	Alternate Basic Equipment
PM10	Mixer, augers, elevators, conveyors all enclosed and vented to a fabric filter baghouse		

BACT is the most stringent control technique for the emissions unit and class of source. Control techniques that are not achieved in practice or contained in s a state implementation plan must be cost effective as well as feasible. Economic analysis to demonstrate cost effectiveness is requried for all determinations that are not achieved in practice or contained in an EPA approved State Implementation Plan.

***This is a Summary Page for this Class of Source - Permit Specific BACT Determinations on Next Page(s)**

APPENDIX C
Top Down BACT Analyses

Top Down BACT Analysis for the Cooling Towers (S-7616-4, -11, -12)

1. BACT Analysis for PM10 Emissions:

a. Step 1 - Identify all control technologies

The SJVUAPCD BACT Clearinghouse guideline 8.3.10, identifies achieved in practice BACT for PM10 emissions from cooling towers – induced draft, evaporative cooling as follows:

1) Cellular Type Drift Eliminator

No technologically feasible alternatives or control alternatives identified as alternate basic equipment for this class and category of source are listed.

b. Step 2 - Eliminate technologically infeasible options

There are no technologically infeasible options to eliminate from step 1.

c. Step 3 - Rank remaining options by control effectiveness

No ranking needs to be done because the applicant has proposed the achieved in practice option.

d. Step 4 - Cost Effectiveness Analysis

The applicant has proposed the only control achieved in practice in the ranking list from Step 3. Therefore, per SJVUAPCD BACT policy, the cost effectiveness analysis is not required.

e. Step 5 - Select BACT

BACT for PM10 emissions from this cooling tower is cellular type drift eliminator. The applicant has proposed to install a cellular type drift eliminator with a drift rate of 0.0005%; therefore BACT for PM10 emissions is satisfied.

Top Down BACT Analysis for the Emergency IC Engines (S-7616-14, -15, -16)

1. BACT Analysis for NOx, CO, VOC, PM10, and SOx Emissions:

a. Step 1 - Identify all control technologies

The SJVUAPCD BACT Clearinghouse guideline 3.1.1 identifies achieved in practice BACT for emissions from emergency diesel IC engines as follows:

Pollutant	Achieved in Practice
CO, NOx, VOC	Latest EPA Tier Certification level for applicable horsepower range
PM10	0.15 g/hp-hr or the Latest EPA Tier Certification level for applicable horsepower range, whichever is more stringent. (ATCM)
SOx	Very low sulfur diesel fuel (15 ppmw sulfur or less)

No technologically feasible alternatives or control alternatives identified as alternate basic equipment for this class and category of source are listed.

b. Step 2 - Eliminate technologically infeasible options

There are no technologically infeasible options to eliminate from Step 1.

c. Step 3 - Rank remaining options by control effectiveness

No ranking needs to be done because only one control option is listed in Step 1.

d. Step 4 - Cost Effectiveness Analysis

The applicant has proposed the only control option listed for each pollutant. Therefore, a cost effectiveness analysis is not required.

e. Step 5 - Select BACT

BACT for CO, NOx, VOC emissions from this emergency standby diesel IC engine is the latest EPA Tier Certification level for the applicable horsepower range. The applicant has proposed to install three interim Tier 4 certified emergency standby diesel IC engines (two rated at 2,922 bhp (S-7616-14 and -15) and one rated at 556 bhp (S-7616-16)), which is the latest Tier Certification for an engine this size as shown in the attached Tier Certification table at the end of this Appendix.

BACT for PM10 is 0.15 g/hp-hr, or the latest EPA Tier Certification level for the applicable horsepower range, whichever is more stringent. The applicant is proposing engines that meet this requirement. Engines S-7616-14 and -15 will be limited to 0.07 g/bhp-hr, and engine S-7616-16 will be limited to 0.01 g/bhp-hr.

BACT for SOx is the use of very low sulfur diesel fuel (15 ppmw sulfur or less). The applicant is proposing the use of CARB certified diesel fuel that is rated at 15 ppmw sulfur or less. Therefore, BACT is satisfied for these pollutants.

Top Down BACT Analysis for the Combustion Turbine Generator (S-7616-9)

1. BACT Analysis for NO_X Emissions:

a. Step 1 - Identify all control technologies

The new SJVUAPCD BACT Clearinghouse guideline (number to be determined later), identifies technologically feasible BACT for NO_X emissions from combustion turbine generators that are fired on hydrogen-rich syngas and natural gas as follows:

1) 2.0 ppmvd @15% O2 (3-hour rolling average) or 2.5 ppmvd@15% O2 (1-hour rolling average), except during startup/shutdown
2) 3.0 ppmvd @15% O2 (3-hour rolling average, except during startup/shutdown
3) 4.0 ppmvd @15% O2 (3-hour rolling average), except during startup/shutdown

No other control alternatives are identified as achieved in practice or alternate basic equipment for this class and category of source are listed.

b. Step 2 - Eliminate technologically infeasible options

There are no technologically infeasible options to eliminate from step 1.

c. Step 3 - Rank remaining options by control effectiveness

1) 2.0 ppmvd @15% O2 (3-hour rolling average) or 2.5 ppmvd@15% O2 (1-hour rolling average), except during startup/shutdown
2) 3.0 ppmvd @15% O2 (3-hour rolling average, except during startup/shutdown
3) 4.0 ppmvd @15% O2 (3-hour rolling average), except during startup/shutdown

d. Step 4 - Cost Effectiveness Analysis

A cost effective analysis must be performed for all control options in the list from Step 3 in the order of their ranking to determine the cost effective option with the lowest emissions.

The applicant has proposed the highest ranked technologically feasible option. Therefore, a cost effectiveness analysis is not required.

e. Step 5 - Select BACT

BACT for NO_X emissions from this combustion turbine generator is controlling emissions to 2.0 ppmvd-NOx @ 15% O_2 (3-hour rolling average) or 2.5 ppmvd-NOx @ 15% O_2 (1 hour average), except during startup/shutdown. The applicant has proposed to install a combustion turbine generator with emissions limited to 2.0 ppmvd-NOx @ 15% O_2 (3-hour rolling average) or 2.5 ppmvd-NOx @ 15% O_2 (1 hour average), except during startup/shutdown; therefore BACT for NO_X emissions is satisfied.

Note, however, that in a meeting between the District and the applicant on 1/7/10, the applicant expressed concern about being subject to NOx emissions limits below 4 ppmvd-NOx for the CTG, which may appear to be cost effective and technologically feasible on paper but unproven in a real world application. As has been explained in more detail earlier, because the proposed CTG will be primarily fired on hydrogen-rich

syngas fuel, the combustion technology to allow hydrogen-rich fuel and natural gas firing is unproven at levels lower than 4 ppmvd on a consistent basis.

Due to the technology's unproven performance, the applicant requests some flexibility regarding the NOx emission limits. Thus, the ATC for the CTG will be issued with an upper absolute limit along with a lower targeted limit that is deemed cost effective and technological feasible in theory. During an initial trial period (possibly lasting 24 months), the District will determine whether the lower targeted limit can be satisfied by examining source testing results and operating history. If, however, the lower targeted value is demonstrated unachievable, NOx emissions in excess of the lower targeted limit (but less than the upper limit) will not constitute a violation, but the permittee will be required to submit a report containing all monitoring and source test information which will be analyzed to determine the final BACT limit for NOx that can be constantly achieved. The permittee will then be required to submit an Authority to Construct application to revise the limits and to provide any necessary additional emissions offsets.

2. BACT Analysis for SOx Emissions:

a. Step 1 - Identify all control technologies

The new SJVUAPCD BACT Clearinghouse guideline (number to be determined later), identifies achieved in practice BACT for SO_X emissions from combustion turbine generators that are fired on hydrogen-rich syngas and natural gas as follows:

1) PUC-regulated natural gas or non-PUC regulated natural with no more than 0.75 grains-S/100 dscf, or 0.0003 lb-SOx/MMBtu when firing on hydrogen-rich fuel

No technologically feasible alternatives or control alternatives identified as alternate basic equipment for this class and category of source are listed.

b. Step 2 - Eliminate technologically infeasible options

There are no technologically infeasible options to eliminate from step 1.

c. Step 3 - Rank remaining options by control effectiveness

No ranking needs to be done because the applicant has proposed the achieved in practice option.

d. Step 4 - Cost Effectiveness Analysis

The applicant has proposed the only control achieved in practice in the ranking list from Step 3. Therefore, per SJVUAPCD BACT policy, the cost effectiveness analysis is not required.

e. Step 5 - Select BACT

BACT for SO_X emissions from this combustion turbine generator is PUC-regulated natural gas or non-PUC regulated natural with no more than 0.75 grains-S/100 dscf, or 0.0003 lb-SOx/MMBtu when firing on hydrogen-rich fuel. The applicant has proposed to install a combustion turbine generator that will be fired on PUC-regulated natural gas with no more than 0.75 grains-S/100 dscf, or hydrogen-rich fuel with emissions no more than 0.0003 lb-SOx/MMBtu; therefore BACT for SO_X emissions is satisfied.

3. BACT Analysis for PM10 Emissions:

a. Step 1 - Identify all control technologies

The new SJVUAPCD BACT Clearinghouse guideline (number to be determined later), identifies achieved in practice BACT for PM10 emissions from combustion turbine generators that are fired on hydrogen-rich syngas and natural gas as follows:

1) Air inlet cooler/filter, lube oil vent coalescer (or equal), and either PUC-regulated natural gas, non-PUC regulated gas with no more than 0.75 grains-S/100 dscf, or 0.0003 lb-SOx/MMBtu when firing on hydrogen-rich fuel exclusively

No technologically feasible alternatives or control alternatives identified as alternate basic equipment for this class and category of source are listed.

b. Step 2 - Eliminate technologically infeasible options

There are no technologically infeasible options to eliminate from step 1.

c. Step 3 - Rank remaining options by control effectiveness

No ranking needs to be done because the applicant has proposed the achieved in practice option.

d. Step 4 - Cost Effectiveness Analysis

The applicant has proposed the only control achieved in practice in the ranking list from Step 3. Therefore, per SJVUAPCD BACT policy, the cost effectiveness analysis is not required.

e. Step 5 - Select BACT

BACT for PM10 emissions from this combustion turbine generator is air inlet cooler/filter, lube oil vent coalescer (or equal), and either PUC-regulated natural gas, non-PUC regulated gas with no more than 0.75 grains-S/100 dscf, or 0.0003 lb-SOx/MMBtu when firing on hydrogen-rich fuel exclusively. The applicant has proposed to install a combustion turbine generator with an air inlet cooler/filter, lube oil vent coalescer (or equal), and PUC-regulated natural gas with no more than 0.75 grains-S/100 dscf, or 0.0003 lb-SOx/MMBtu when firing on hydrogen-rich fuel exclusively; therefore BACT for SO_X emissions is satisfied.

4. BACT Analysis for CO Emissions:

a. Step 1 - Identify all control technologies

The new SJVUAPCD BACT Clearinghouse guideline (number to be determined later), identifies technologically feasible BACT for CO emissions from combustion turbine generators that are fired on hydrogen-rich syngas and natural gas as follows:

1) 3.0 ppmvd-CO @ 15% O2 when firing on H2-rich fuel exclusively and 4.0 ppmvd-CO @ 15% O2 when firing on fuel containing natural gas.
2) 3.0 ppmvd-CO @ 15% O2 when firing on hydrogen-rich fuel exclusively and 5.0 ppmvd-CO @ 15% O2 when firing on fuel containing natural gas.

No other control alternatives are identified as achieved in practice or alternate basic equipment for this class and category of source are listed.

b. Step 2 - Eliminate technologically infeasible options

There are no technologically infeasible options to eliminate from step 1.

c. Step 3 - Rank remaining options by control effectiveness

1) 3.0 ppmvd-CO @ 15% O2 when firing on H2-rich fuel exclusively and 4.0 ppmvd-CO @ 15% O2 when firing on fuel containing natural gas.
2) 3.0 ppmvd-CO @ 15% O2 when firing on hydrogen-rich fuel exclusively and 5.0 ppmvd-CO @ 15% O2 when firing on fuel containing natural gas.

d. Step 4 - Cost Effectiveness Analysis

A cost effective analysis must be performed for all control options in the list from Step 3 in the order of their ranking to determine the cost effective option with the lowest emissions.

The applicant has proposed the highest ranked technologically feasible option. Therefore, a cost effectiveness analysis is not required.

e. Step 5 - Select BACT

BACT for CO emissions from this combustion turbine generator is controlling emissions to 3.0 ppmvd-CO @ 15% O2 when firing on H2-rich fuel exclusively and 4.0 ppmvd-CO @ 15% O2 when firing on fuel containing natural gas, except during startup/shutdown. The applicant has proposed to install a combustion turbine generator with emissions limited to 3.0 ppmvd-CO @ 15% O2 when firing on H2-rich fuel exclusively and 4.0 ppmvd-CO @ 15% O2 when firing on fuel containing natural gas, except during startup/shutdown; therefore BACT for CO emissions is satisfied.

5. BACT Analysis for VOC Emissions:

a. Step 1 - Identify all control technologies

The new SJVUAPCD BACT Clearinghouse guideline (number to be determined later), identifies technologically feasible BACT for VOC emissions from combustion turbine generators that are fired on hydrogen-rich syngas and natural gas as follows:

1) 1.0 ppmvd @ 15% O2 when firing on H2-rich fuel exclusively and 1.5 ppmvd @ 15% O2 when firing on fuel containing natural gas.
2) 1.0 ppmvd @ 15% O2 when firing on hydrogen-rich fuel exclusively and 2.0 ppmvd @ 15% O2 when firing on fuel containing natural gas

No other control alternatives are identified as achieved in practice or alternate basic equipment for this class and category of source are listed.

b. Step 2 - Eliminate technologically infeasible options

There are no technologically infeasible options to eliminate from step 1.

c. Step 3 - Rank remaining options by control effectiveness

1) 1.0 ppmvd @ 15% O2 when firing on H2-rich fuel exclusively and 1.5 ppmvd @ 15% O2 when firing on fuel containing natural gas.
2) 1.0 ppmvd @ 15% O2 when firing on hydrogen-rich fuel exclusively and 2.0 ppmvd @ 15% O2 when firing on fuel containing natural gas

d. Step 4 - Cost Effectiveness Analysis

A cost effective analysis must be performed for all control options in the list from Step 3 in the order of their ranking to determine the cost effective option with the lowest emissions.

The applicant has proposed the highest ranked technologically feasible option. Therefore, a cost effectiveness analysis is not required.

e. Step 5 - Select BACT

BACT for VOC emissions from this combustion turbine generator is controlling emissions to 1.0 ppmvd @ 15% O2 when firing on H2-rich fuel exclusively and 1.5 ppmvd @ 15% O2 when firing on fuel containing natural gas, except during startup/shutdown. The applicant has proposed to install a combustion turbine generator with emissions limited to 1.0 ppmvd @ 15% O2 when firing on H2-rich fuel exclusively and 1.5 ppmvd @ 15% O2 when firing on fuel containing natural gas, except during startup/shutdown; therefore BACT for VOC emissions is satisfied.

Top Down BACT Analysis for Natural Gas-Fired Auxiliary Boiler (S-7616-9)

1. BACT Analysis for NO_X Emissions:

a. Step 1 - Identify all control technologies

The District adopted District Rule 4320 on October 16, 2008. The NO_X emission limit requirements in District Rule 4320 are lower than the current BACT limits; therefore a project specific BACT analysis will be performed to determine BACT for this project. District Rule 4320 includes a compliance option that limits oilfield steam generators with heat input ratings greater than 20 MMBtu/hr to 7 ppm @ 3% O_2. This emission limit is Achieved in Practice control technology for the BACT analysis. District Rule 4320 also contains an enhanced schedule option that allows applicants additional time to meet the requirements of the rule. The enhanced schedule NO_X emission limit requirement is 5 ppmv @ 3% O_2. Since this is an enhanced option in the rule, it will be considered the Technologically Feasible control technology for the BACT analysis.

The SJVUAPCD BACT Clearinghouse Guideline 1.1.2 has been rescinded. Therefore a new BACT analysis is required. The following are possible control technologies:

1. 7 ppmvd @ 3% O2 - Achieved in Practice.
2. 5 ppmvd @ 3% O2 with SCR – Technologically Feasible

b. Step 2 - Eliminate Technologically Infeasible Options

None of the above listed technologies are technologically infeasible.

c. Step 3 - Rank Remaining Control Technologies by Control Effectiveness

1. 7 ppmvd @ 3% O2 - Achieved in Practice.
2. 5 ppmvd @ 3% O2 with SCR – Technologically Feasible

d. Step 4 - Cost Effectiveness Analysis

A cost effective analysis must be performed for all control options in the list from Step 3 in the order of their ranking to determine the cost effective option with the lowest emissions.

The applicant has proposed the highest ranked technologically feasible option. Therefore, a cost effectiveness analysis is not required.

e. Step 5 - Select BACT

BACT for NO_X emissions from the proposed boiler is controlling emissions to 5 ppmv-NOx @ 3% O_2. The applicant has proposed a boiler with emissions controlled to 5 ppmv-NOx @ 3% O_2 with the use of selective catalytic reduction; therefore BACT for NO_X emissions is satisfied.

2. BACT Analysis for VOC, SOx, CO, and PM_{10} Emissions:

a. Step 1 - Identify all control technologies

The SJVUAPCD BACT Clearinghouse guideline 1.1.2 identifies achieved in practice and technologically feasible BACT for Steam Generator $\geq$ 20 MMbtu/hr, at an oil field as follows:

1. Natural gas fuel with LPG backup

b. Step 2 - Eliminate Technologically Infeasible Options

The above listed technology is technologically feasible.

c. Step 3 - Rank Remaining Control Technologies by Control Effectiveness

1. Natural gas fuel with LPG backup

d. Step 4 - Cost Effectiveness Analysis

Only one control technology identified and this technology is achieved in practice, therefore, cost effectiveness analysis not necessary.

e. Step 5 - Select BACT for VOC, SOx, CO, and PM_{10}

BACT is the use of natural gas with LPG backup. The applicant has proposed the use of PUC-quality natural gas; therefore, BACT for VOC, SOx, CO, and PM_{10} emissions is satisfied.

Top Down BACT Analysis for the Sulfur Recovery Unit (S-7616-5)

1. BACT Analysis for SO_X Emissions:

a. Step 1 - Identify all control technologies

The SJVUAPCD BACT Clearinghouse guideline 7.2.6, identifies achieved in practice BACT for SOx emissions from sulfur recovery plants that process 20 tons/day of sulfur or more as follows:

1) Sulfur recovery unit with tail gas treating unit to treat gas to = or < 10 ppmv H2S (based on a three-hour, moving average) and a standby incinerator - except during startup and shutdown.

The guideline aslso identified the following as technologically feasible BACT:

In addition, the guideline identifies technologically feasible BACT for SOx emissions as follows:

2) Sulfur recovery unit with two tail gas treating units in parallel (one as standby) to treat gas to = or < 10 ppmv H2S (based on a three-hour, moving average) and a standby incinerator - except during startup and shutdown.

No other control alternatives are identified as alternate basic equipment for this class and category of source.

b. Step 2 - Eliminate technologically infeasible options

There are no technologically infeasible options to eliminate from step 1.

c. Step 3 - Rank remaining options by control effectiveness

1a) Sulfur recovery unit with <u>two</u> tail gas treating units in parallel (one as standby) to treat gas to = or < 10 ppmv H2S (based on a three-hour, moving average) and a standby incinerator - except during startup and shutdown.

1b) Sulfur recovery unit with tail gas treating unit to treat gas to = or < 10 ppmv H2S (based on a three-hour, moving average) and a standby incinerator - except during startup and shutdown.

d. Step 4 - Cost Effectiveness Analysis

A cost effective analysis must be performed for all control options in the list from Step 3 in the order of their ranking to determine the cost effective option with the lowest emissions.

The difference between the two options identified in Step 3 is the fact that the first control option calls for an second tail gas treating unit (to serve as standby) to treat the gas. Under normal operating conditions, the gas stream from the sulfur recovery unit will be treated in the tail gas treating unit then transported by pipeline to the CO2 vent system (S-7616-8) for custody transfer point at Elk Hills Filed for CO2 enhanced oil recovery

(EOR) and sequestration. A tail gas thermal oxidizer, as required by both control options, will also be included as a control device to provide for safe and efficient destruction of the hydrogen sulfide in the vent gas during startups and shutdowns.

In this case, the addition of a backup tail gas treating unit will not achieve any additional control since there are typically no SRU emissions to atmosphere as the treated stream will be transported by pipeline for EOR and sequestration. Additionally, scheduled TGTU maintenance shutdowns will be planned to coincide with process block shutdowns so there are no excess process emissions. In the event of any unscheduled TGTU curtailment or operating problems, the SRU tail gas can be redirected into the CO2 product stream up to the limits contained in the CO2 product specifications of permit S-7616-8, and/or the process block can be curtailed or shutdown to accommodate maintenance necessary to restore the TGTU operations.

With all these built in control measures, the inclusion of a second tail gas treating unit would not achieve any additional control. Therefore, the emission reduction due to a second tail gas treating unit will be zero, so this alternate control will automatically be cost ineffective, and it can be eliminated from consideration.

e. Step 5 - Select BACT

BACT for SOx emissions from the sulfur recovery plant is the use of a sulfur recovery unit with tail gas treating unit to treat gas to = or < 10 ppmv H2S (based on a three-hour, moving average) and a standby incinerator, except during startup and shutdown. The applicant has proposed to install a sulfur recovery unit with tail gas treating unit to treat gas to = or < 10 ppmv H2S (based on a three-hour, moving average) and a standby incinerator, except during startup and shutdown; therefore BACT for SOx emissions is satisfied.

Top Down BACT Analysis for the Fugitive Emissions Associated with Sulfur Recovery Unit (S-7616-5) and with Gasification System (S-7616-2)

1. BACT Analysis for VOC Emissions:

a. Step 1 - Identify all control technologies

The SJVUAPCD BACT Clearinghouse guideline 4.12.1 applies to chemical plant valves and connectors and guideline 4.12.2 applies to chemical plant pump and compressor seals. Guideline 4.12.1 identifies achieved the following as practice BACT for VOC emissions:

1) Leak defined as a reading of methane in excess of 100 ppmv above background when measure per EPA Method 21 and an Inspection and Maintenance Program pursuant to District Rule 4455.

Guideline 4.12.2 identifies achieved the following as practice BACT for VOC emissions:

1) Leak defined as a reading of methane in excess of 500 ppmv above background when measure per EPA Method 21 and an Inspection and Maintenance Program pursuant to District Rule 4455.

No other control alternatives are identified as technologically feasible or alternate basic equipment for this class and category of source by these guidelines.

b. Step 2 - Eliminate technologically infeasible options

There are no technologically infeasible options to eliminate from step 1.

c. Step 3 - Rank remaining options by control effectiveness

1) Leak defined as a reading of methane in excess of 100 ppmv above background for valves and connectors when measure per EPA Method 21 and an Inspection and Maintenance Program pursuant to District Rule 4455. Leak defined as a reading of methane in excess of 500 ppmv above background for pump and compressor seals when measure per EPA Method 21 and an Inspection and Maintenance Program pursuant to District Rule 4455.

d. Step 4 - Cost Effectiveness Analysis

A cost effective analysis must be performed for all control options in the list from Step 3 in the order of their ranking to determine the cost effective option with the lowest emissions.

The applicant has proposed the highest ranked technologically feasible option. Therefore, a cost effectiveness analysis is not required.

e. Step 5 - Select BACT

BACT for VOC emissions a leak defined as a reading of methane in excess of 100 ppmv above background for valves and connectors and in excess of 500 ppmv above

background for pump and compressor seals when measure per EPA Method 21 and an Inspection and Maintenance Program pursuant to District Rule 4455. The applicant has proposed to these control measures; therefore BACT for VOC emissions is satisfied.

Top Down BACT Analysis for the CO2 Recovery System (S-7616-8)

1. BACT Analysis for CO and VOC Emissions:

a. Step 1 - Identify all control technologies

The new SJVUAPCD BACT Clearinghouse guideline (number to be determined later), identifies technologically feasible BACT for CO and VOC emissions from a coal/coke gasification CO2 recovery system as follows:

1) Capture, compression, and transportation of the exhaust stream in a pipeline for injection (during normal operation); venting allowed when transportation system is unavailable due to upset condition up to 504 hr per rolling 12-month period.

No other control alternatives are identified as achieved in practice or as alternate basic equipment for this class and category of source.

b. Step 2 - Eliminate technologically infeasible options

There are no technologically infeasible options to eliminate from step 1.

c. Step 3 - Rank remaining options by control effectiveness

1) Capture, compression, and transportation of the exhaust stream in a pipeline for injection (during normal operation); venting allowed when transportation system is unavailable due to upset condition up to 504 hr per rolling 12-month period.

d. Step 4 - Cost Effectiveness Analysis

A cost effective analysis must be performed for all control options in the list from Step 3 in the order of their ranking to determine the cost effective option with the lowest emissions.

The applicant has proposed the highest ranked technologically feasible option. Therefore, a cost effectiveness analysis is not required.

e. Step 5 - Select BACT

BACT for CO and VOC emissions from the CO2 recovery system is the capture, compression, and transportation of the exhaust stream in a pipeline for injection (during normal operation), with venting allowed when transportation system is unavailable due to upset condition up to 504 hr per rolling 12-month period. The applicant has proposed the capture, compression, and transportation of the exhaust stream in a pipeline for injection (during normal operation), with venting up to 504 hr per rolling 12-month period when the transportation system is unavailable due to upset conditions; therefore BACT for CO and VOC emissions is satisfied.

Top Down BACT Analysis for the Feedstock Handling and Storage System (S-7616-1)

1. BACT Analysis for PM10 Emissions:

a. Step 1 - Identify all control technologies

The feedstock handling, crushing, and storage system consists truck unloading, feedstock silos, mass flow bins, crushers, fluxant bins, and grinding and slurry operation, with each operation served by a dust collector. Only PM10 emission will result from the operations.

The applicable BACT requirements for the proposed operations are covered by the following BACT guidelines:

SJVUAPCD BACT Clearinghouse guideline 8.2.1 lists BACT requirements for Petroleum Coke Handling – Receiving, Storage, and Loadout.

SJVUAPCD BACT Clearinghouse guideline 8.4.1 lists BACT requirements for Dry Material Storage and Conveying Operation.

SJVUAPCD BACT Clearinghouse guideline 8.4.2 lists BACT requirements for Wet Material Storage and Conveying Operation.

SJVUAPCD BACT Clearinghouse guideline 8.4.3 lists BACT requirements for Dry Material Handling – Mixing, Blending, Milling, or Storage.

These guidelines identify achieved in practice BACT for PM10 emissions that apply to the operation as follows:

Petroleum coke handling – receiving, storage, and loadout:

1) Adequate moisture content of coke received, and loaded out, to prevent visible emissions in excess of 5% opacity. Water and surfactant applied to storage piles.

Dry material storage and conveying operation:

1) Storage, augers, elevators, conveyors all enclosed and vented to a fabric filter baghouse

Wet material storage and conveying operation:

1) Enclosed storage with sufficient moisture so visible emissions are less than 5% opacity from any single emission point

Dry material handling – mixing, blending, milling, or storage:

1) Mixer, augers, elevators, conveyors all enclosed and vented to a fabric filter baghouse

No technologically feasible alternatives or control alternatives identified as alternate basic equipment for this class and category of source are listed.

b. Step 2 - Eliminate technologically infeasible options

There are no technologically infeasible options to eliminate from step 1.

c. Step 3 - Rank remaining options by control effectiveness

No ranking needs to be done because the applicant has proposed the most effective control option identified above for each of the process areas.

d. Step 4 - Cost Effectiveness Analysis

The applicant has proposed the most effective control options identified in Step 3 that is applicable to each of the process areas. Therefore, per SJVUAPCD BACT policy, a cost effectiveness analysis is not required.

e. Step 5 - Select BACT

BACT requirements for PM10 emissions from the feedstock handling, crushing, and storage system are for the storage silos, mixers, augers, elevators, conveyors all enclosed and vented to a fabric filter baghouse, and for the feedstock to contain adequate moisture to prevent visible emissions in excess of 5% opacity. The applicant has proposed that the coal storage silos, fluxant storage bins, mass flow bins, crusher, augers, elevators, and conveyers all be enclosed and vented to fabric filter baghouse, and the feedstock will be required to contain adequate moisture content to prevent visible emissions in excess of 5% opacity. Therefore, BACT for PM10 emissions is satisfied.

Top Down BACT Analysis for Flares (S-7616-3-0 and -6-0):

1. BACT Analysis for NO_X Emissions:

a. Step 1 - Identify all control technologies

The SJVUAPCD BACT Clearinghouse guideline 1.4.8, identifies achieved in practice BACT for NOx emissions from a refinery flare as follows:

1) Engineered flare, with air or steam assisted combustion, staged combustion, and/or equivalent District approved controls. Flare shall be equipped with a flare gas recovery system for non-emergency releases.

In addition, the guideline identifies technologically feasible BACT for NOx emissions as follows:

1) Engineered flare or enclosed burner with air or steam assisted combustion, staged combustion, and/or equivalent District approved controls, and having demonstrated emissions of NOx or less than 0.068 lb/MMBtu. Flare shall be equipped with a flare gas recovery system for non-emergency releases.

No other control alternatives are identified as alternate basic equipment for this class and category of source.

b. Step 2 - Eliminate technologically infeasible options

There are no technologically infeasible options to eliminate from step 1.

The applicant has proposed the most effective control option identified above. The engineered flare has an enclosed burner that is equipped with District-approved controls that will result in smokeless operation as described below. The flare systems will be designed, constructed, and commissioned by a qualified engineering firms with extensive experience with this type of equipment. The flare tips selected will likewise be engineered by qualified suppliers. Carbon present in relief gases sent to each of the three flares is expected to be almost all in the oxidized (CO, CO2) state rather than in a reduced (hydrocarbon) state. The lack of reduced carbon is expected to result in virtually no smoke formation over the expected range of flaring events. Therefore, the flare tip suppliers have stated that no assist steam or air is necessary to achieve smokeless combustion, and this proposal is deemed as District-approved controls that are equivalent to a flare with air or steam assisted combustion or staged combustion. Additionally, NOx emissions of 0.068 lb/MMBtu are proposed.

The flares will also be equipped with a system of pressure relief valves/pressure control valves to prevent non-emergency releases of gases into the flare headers. Normal operation of the gasification flare will include flaring during gasifier startup/shutdown, CTG outages and CTG washes. No flaring (other than pilot and sweep gas) is planned during normal operation.

Following successful startup of the gasifiers, a tight shutoff block valve is closed on the startup line at both the scrubber overhead and shift reactor discharge to prevent leakage through the start-up pressure controller and a smaller parallel valve set that includes control valve and a tight seal "chopper" valve is placed in service. The pressure controller/chopper valve configuration works to stop any inadvertent, non-emergency process leakage from the scrubber overhead relief valve into the flare system during normal operations. Because it is a tight shutoff arrangement, no flow through the device is expected, except during an actual flaring event, and therefore, it is deemed an equivalent control to that provided by a flare gas recovery system for non-emergency releases.

Similarly, the SRU flare will be used to safely dispose of gas streams during startup and shutdown and unplanned upset emergency events. During startups and shutdowns and most flaring events, the acid gas is routed to a caustic scrubber via a pressure controller where the sulfur compounds are absorbed by the caustic solution. After scrubbing, the gas is routed to the elevated SRU flare stack via a SRU flare knockout drum. Fresh and spent caustic tanks and pumps are provided to allow delivery of fresh caustic and disposal of spent caustic. Since the pressure relief valve set point is set higher than the control valve set point, the relieve valve will only be utilized during infrequent emergency events. The pressure controller/caustic wash configuration also works to reduce any process leakage during normal operations that might cause the issuance of air contaminants. Similar to the valve arrangement serving the gasification flare, because it is a tight shutoff arrangement, no flow through the device is expected, except during an actual flaring event, and therefore, it is deemed an equivalent control to that provided by a flare gas recovery system for non-emergency releases.

c. Step 3 - Rank remaining options by control effectiveness

1) Engineered flare or enclosed burner with air or steam assisted combustion, staged combustion, and/or equivalent District approved controls, and having demonstrated emissions of NOx or less than 0.068 lb/MMBtu. Flare shall be equipped with a flare gas recovery system for non-emergency releases.

2) Engineered flare, with air or steam assisted combustion, staged combustion, and/or equivalent District approved controls. Flare shall be equipped with a flare gas recovery system for non-emergency releases.

d. Step 4 - Cost Effectiveness Analysis

The applicant has proposed the most effective control options identified in Step 3 that is applicable to the proposed flares. Therefore, per SJVUAPCD BACT policy, a cost effectiveness analysis is not required.

e. Step 5 - Select BACT

BACT for NOx emissions is the use of an engineered flare or enclosed burner with air or steam assisted combustion, staged combustion, and/or equivalent District approved controls, and having demonstrated emissions of NOx or less than 0.068 lb/MMBtu. Flare shall be equipped with a flare gas recovery system for non-emergency releases. As is

explained in step 4, the applicant's proposal satisfies these requirements; therefore BACT for NOx emissions is satisfied.

2. BACT Analysis for CO Emissions:

a. Step 1 - Identify all control technologies

The SJVUAPCD BACT Clearinghouse guideline 1.4.8, identifies achieved in practice BACT for CO emissions from a refinery flare as follows:

1) Engineered flare, with air or steam assisted combustion, staged combustion, and/or equivalent District approved controls. Flare shall be equipped with a flare gas recovery system for non-emergency releases.

No other control alternatives are identified as technologically feasible or alternate basic equipment for this class and category of source.

b. Step 2 - Eliminate technologically infeasible options

There are no technologically infeasible options to eliminate from step 1.

c. Step 3 - Rank remaining options by control effectiveness

1) Engineered flare, with air or steam assisted combustion, staged combustion, and/or equivalent District approved controls. Flare shall be equipped with a flare gas recovery system for non-emergency releases.

d. Step 4 - Cost Effectiveness Analysis

The applicant has proposed the most effective control options identified in Step 3 that is applicable to the flares. The flares will result in smokeless operation (as is explained in the BACT analysis for NOx emissions), which constitutes District-approved controls that are equivalent to air or steam assisted combustion or staged combustion. The flares will also be equipped with a series of control valves and relief valves (as described in the BACT analysis for NOx emissions section) that will maintain a tight shutoff arrangement where no unintended flow is expected, except during actual flaring events. These arrangements are deemed controls equivalent to a flare gas recovery system that minimizes non-emergency releases. Therefore, per SJVUAPCD BACT policy, a cost effectiveness analysis is not required.

e. Step 5 - Select BACT

BACT for CO emissions is the use of an engineered flare with air or steam assisted combustion, staged combustion, and/or equivalent District approved controls. Flare shall be equipped with a flare gas recovery system for non-emergency releases. As is explained in step 4, the applicant's proposal satisfies these BACT requirements; therefore BACT for CO emissions is satisfied.

3. BACT Analysis for PM10 Emissions:

a. Step 1 - Identify all control technologies

The SJVUAPCD BACT Clearinghouse guideline 1.4.8, identifies achieved in practice BACT for PM10 emissions from a refinery flare as follows:

1) Engineered flare designed for and operated without visible emissions, except as allowed by 40CFR 60.18(c)(1) and District Rule 4101 and equipped with air or steam assisted combustion, staged combustion, and/or equivalent District approved controls. Flare shall be equipped with a flare gas recovery system for non-emergency releases. Pilot and sweep fuel shall be natural gas, treated refinery gas or LPG.

No other control alternatives are identified as technologically feasible or alternate basic equipment for this class and category of source.

b. Step 2 - Eliminate technologically infeasible options

There are no technologically infeasible options to eliminate from step 1.

c. Step 3 - Rank remaining options by control effectiveness

1) Engineered flare designed for and operated without visible emissions, except as allowed by 40CFR 60.18(c)(1) and District Rule 4101 and equipped with air or steam assisted combustion, staged combustion, and/or equivalent District approved controls. Flare shall be equipped with a flare gas recovery system for non-emergency releases. Pilot and sweep fuel shall be natural gas, treated refinery gas or LPG.

d. Step 4 - Cost Effectiveness Analysis

The applicant has proposed the most effective control options identified in Step 3 that is applicable to the flares. The flares will result in smokeless operation (as is explained in the BACT analysis for NOx emissions), which constitutes District-approved controls that are equivalent to air or steam assisted combustion or staged combustion. The flares will also be equipped with a series of control valves and relief valves (as described in the BACT analysis for NOx emissions section) that will maintain a tight shutoff arrangement where no unintended flow is expected, except during actual flaring events. These arrangements are deemed controls equivalent to a flare gas recovery system that minimizes non-emergency releases. Additionally, the flares will have a continuous pilot that will be fired on PUC-quality natural gas. Therefore, per SJVUAPCD BACT policy, a cost effectiveness analysis is not required.

e. Step 5 - Select BACT

BACT for PM10 emissions is the use of an engineered flare with air or steam assisted combustion, staged combustion, and/or equivalent District approved controls. Flare shall be equipped with a flare gas recovery system for non-emergency releases. As is explained in step 4, the applicant's proposal satisfies these BACT requirements; therefore BACT for PM10 emissions is satisfied.

4. BACT Analysis for SOx Emissions:

a. Step 1 - Identify all control technologies

The SJVUAPCD BACT Clearinghouse guideline 1.4.8, identifies achieved in practice BACT for SOx emissions from a refinery flare as follows:

1) Flare shall be equipped with a flare gas recovery system for non-emergency releases. Pilot and purge gas shall be natural gas, treated refinery gas or LPG.

No other control alternatives are identified as technologically feasible or alternate basic equipment for this class and category of source.

b. Step 2 - Eliminate technologically infeasible options

There are no technologically infeasible options to eliminate from step 1.

c. Step 3 - Rank remaining options by control effectiveness

1) Flare shall be equipped with a flare gas recovery system for non-emergency releases. Pilot and purge gas shall be natural gas, treated refinery gas or LPG.

d. Step 4 - Cost Effectiveness Analysis

The applicant has proposed the most effective control options identified in Step 3 that is applicable the flares. The flares will also be equipped with a series of control valves and relief valves (as described in the BACT analysis for NOx emissions section) that will maintain a tight shutoff arrangement where no unintended flow is expected, except during actual flaring events. These arrangements are deemed controls equivalent to a flare gas recovery system that minimizes non-emergency releases. Additionally, the flares will have a continuous pilot that will be fired on PUC-quality natural gas. Therefore, per SJVUAPCD BACT policy, a cost effectiveness analysis is not required.

e. Step 5 - Select BACT

BACT for SOx emissions is the use of a flare with a flare gas recovery system for non-emergency releases. Pilot and purge gas shall be natural gas. As is explained in step 4, the applicant's proposal satisfies these BACT requirements; therefore BACT for SOx emissions is satisfied.

5. BACT Analysis for VOC Emissions:

a. Step 1 - Identify all control technologies

The SJVUAPCD BACT Clearinghouse guideline 1.4.8, identifies achieved in practice BACT for VOC emissions from a refinery flare as follows:

1) Engineered flare designed with a VOC destruction efficiency of ≥ 98%. Flare design shall include air or steam assisted combustion, staged combustion, and/or equivalent District approved controls. Flare shall be equipped with a flare gas recovery system for non-emergency releases, a continuous pilot or District approved alternative and a method for detecting flame. Pilot and sweep fuel shall be natural gas, treated refinery gas or LPG.

In addition, the guideline identifies technologically feasible BACT for NOx emissions as follows:

1) Enclosed ground level flare or any other engineered flare designed with a VOC destruction efficiency of ≥ 98.5%. Flare design shall include air or steam assisted combustion, staged combustion, and/or equivalent District approved controls. Flare shall be equipped with a flare gas recovery system for non-emergency releases, a continuous pilot or District approved alternative and a method for detecting flame. Pilot and sweep fuel shall be natural gas, treated refinery gas or LPG.

No other control alternatives are identified as alternate basic equipment for this class and category of source.

b. Step 2 - Eliminate technologically infeasible options

There are no technologically infeasible options to eliminate from step 1.

c. Step 3 - Rank remaining options by control effectiveness

1) Enclosed ground level flare or any other engineered flare designed with a VOC destruction efficiency of ≥ 98.5%. Flare design shall include air or steam assisted combustion, staged combustion, and/or equivalent District approved controls. Flare shall be equipped with a flare gas recovery system for non-emergency releases, a continuous pilot or District approved alternative and a method for detecting flame. Pilot and sweep fuel shall be natural gas, treated refinery gas or LPG.

2) Engineered flare designed with a VOC destruction efficiency of ≥ 98%. Flare design shall include air or steam assisted combustion, staged combustion, and/or equivalent District approved controls. Flare shall be equipped with a flare gas recovery system for non-emergency releases, a continuous pilot or District approved alternative and a method for detecting flame. Pilot and sweep fuel shall be natural gas, treated refinery gas or LPG.

d. Step 4 - Cost Effectiveness Analysis

The applicant has proposed the most effective control options identified in Step 3 that is applicable to the flares. The applicant proposes engineered flares designed with a VOC destruction efficiency of 99%. The flares will result in smokeless operation (as is explained in the BACT analysis for NOx emissions), which constitutes District-approved controls that are equivalent to air or steam assisted combustion or staged combustion. The flares will also be equipped with a series of control valves and relief valves (as described in the BACT analysis for NOx emissions section) that will maintain a tight shutoff arrangement where no unintended flow is expected, except during actual flaring events. These arrangements are deemed controls equivalent to a flare gas recovery system that minimizes non-emergency releases. Additionally, the flares will have a continuous pilot that will be fired on PUC-quality natural gas. Therefore, per SJVAPCD BACT policy, a cost effectiveness analysis is not required.

e. Step 5 - Select BACT

BACT for VOC emissions is the use of an enclosed ground level flare or any other engineered flare designed with a VOC destruction efficiency of ≥ 98.5%. Flare design shall include air or steam assisted combustion, staged combustion, and/or equivalent District approved controls. Flare shall be equipped with a flare gas recovery system for non-emergency releases, a continuous pilot or District approved alternative and a method for detecting flame. Pilot and sweep fuel shall be natural gas, treated refinery gas or LPG. As is explained in step 4, the applicant's proposal satisfies these BACT requirements; therefore BACT for VOC emissions is satisfied.

APPENDIX D
Process Flow Diagrams

APPENDIX D
Process Flow Diagrams

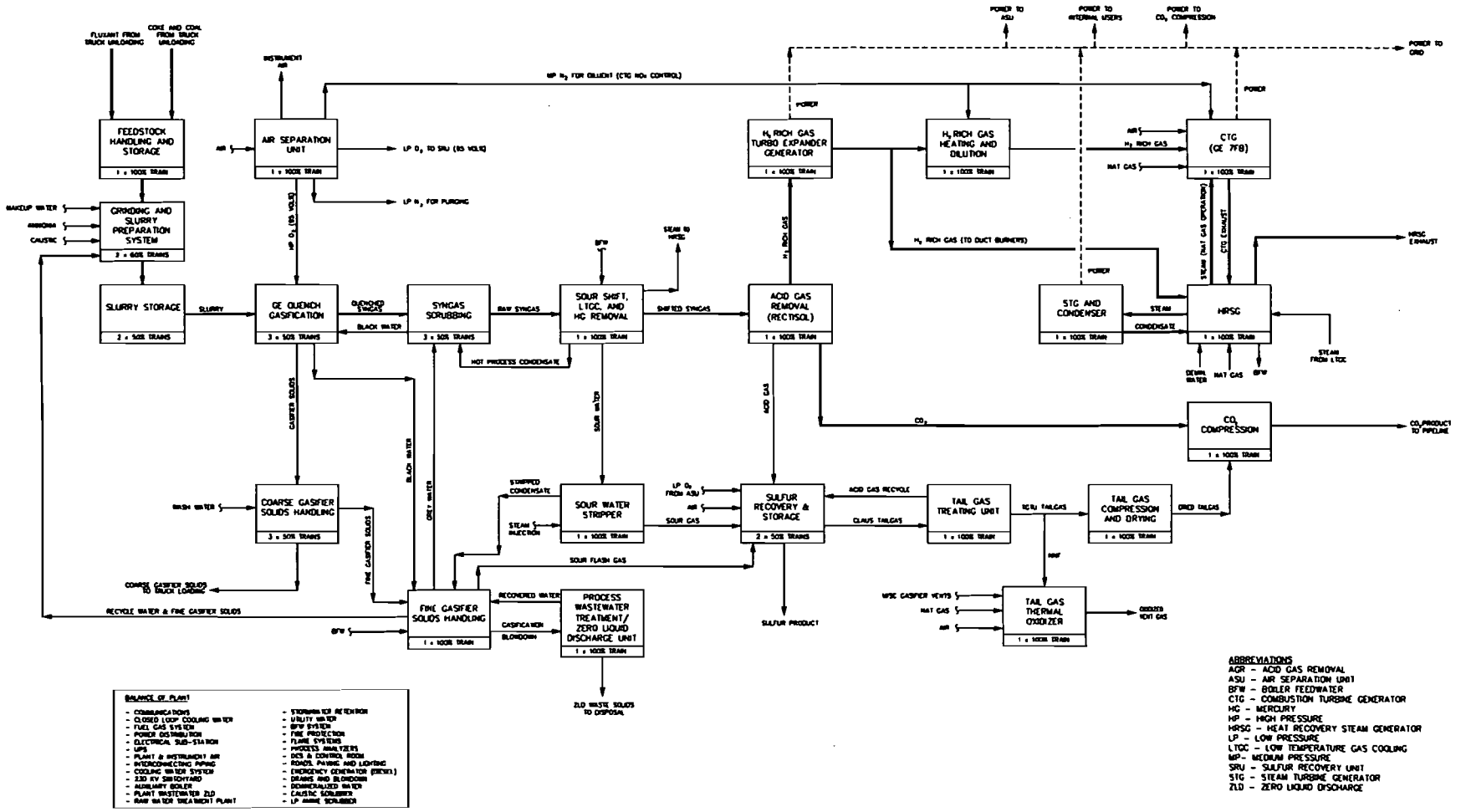

Source:
Fluor; Hydrogen Energy California, Kern County Power Project;
Block Flow Diagram; Drawing No: A3RW-BFD-25-001, Rev. 5 (09/09/09), Removed Auxiliary CTG

OVERALL BLOCK FLOW DIAGRAM

September 2009 Hydrogen Energy California (HECA)
28067571 Kern County, California

URS **REVISED FIGURE 2-1**

9/15/09 vsa_T:\HECA\GRAPHICS\Amendment Sept 09\Rev 2-3_overall block.ai

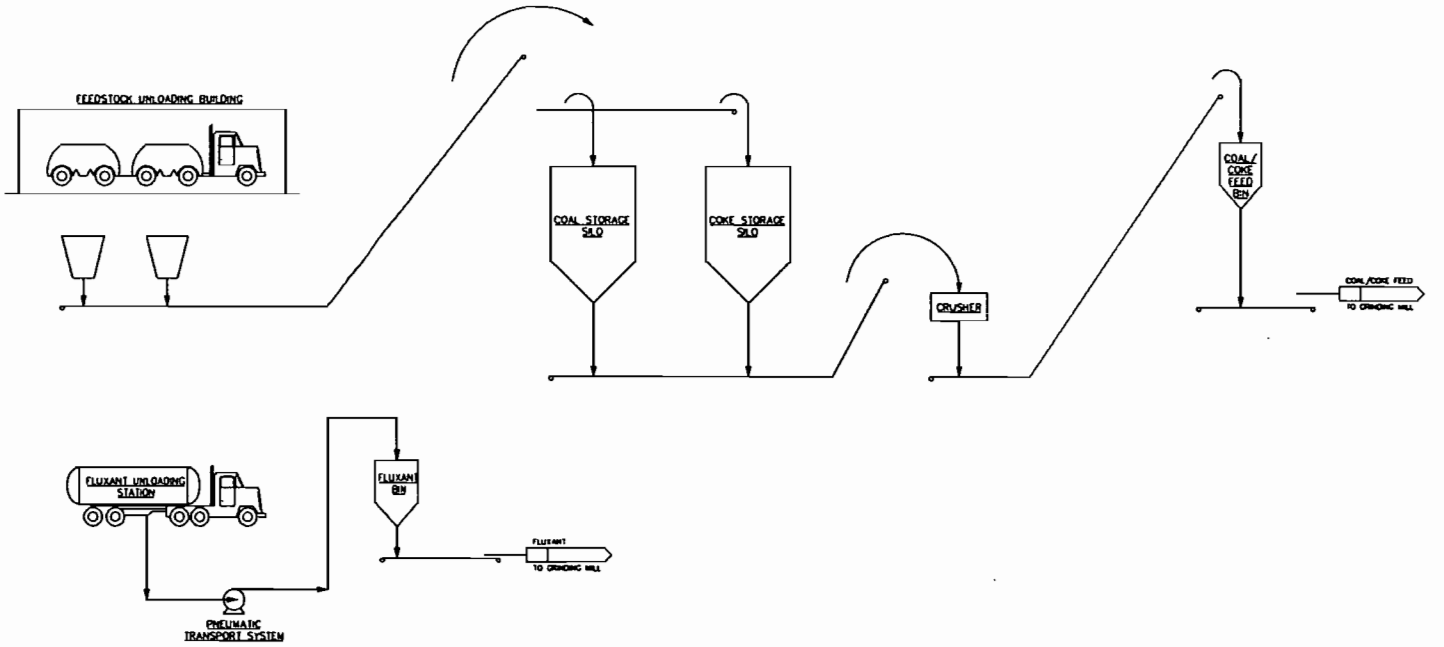

Source:
Fluor; Hydrogen Energy California, Kern County Power Project;
Flow Diagram Feedstock Handling and Storage; Drawing No: A3RW-PDF-25-003, Rev. 0 (06/04/08)

FLOW DIAGRAM
FEEDSTOCK HANDLING AND STORAGE

May 2009 Hydrogen Energy California (HECA)
28067571 Kern County, California

URS

FIGURE 2-2

5/18/09 vsa.; I:\HECA\GRAPHICS\2.0 Project Description\2-12_feedstock.ai

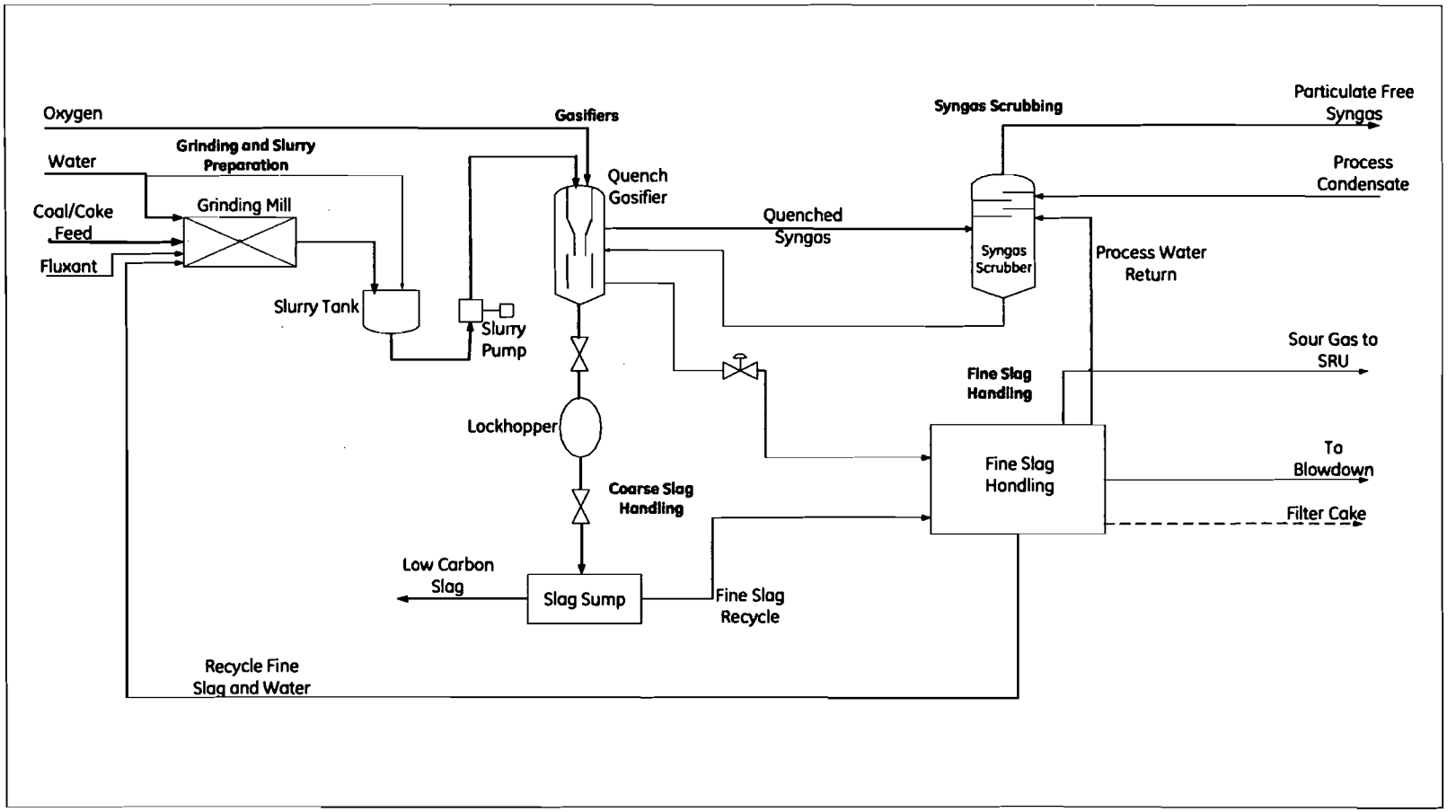

Source:
GE Energy (USA) LLC; Hydrogen Energy California Feasibility Study;
Gasification Process Sketch for Permits; Drawing No: 334A2456, Rev. 0 (05/15/08)

GASIFICATION PROCESS SKETCH FOR PERMITS

May 2009 Hydrogen Energy California (HECA)
28067571 Kern County, California

URS

FIGURE 2-3

5/20/09 vsa.. T:\HECA\GRAPHICS\2.0 Project Description\2-13_gasification.ai

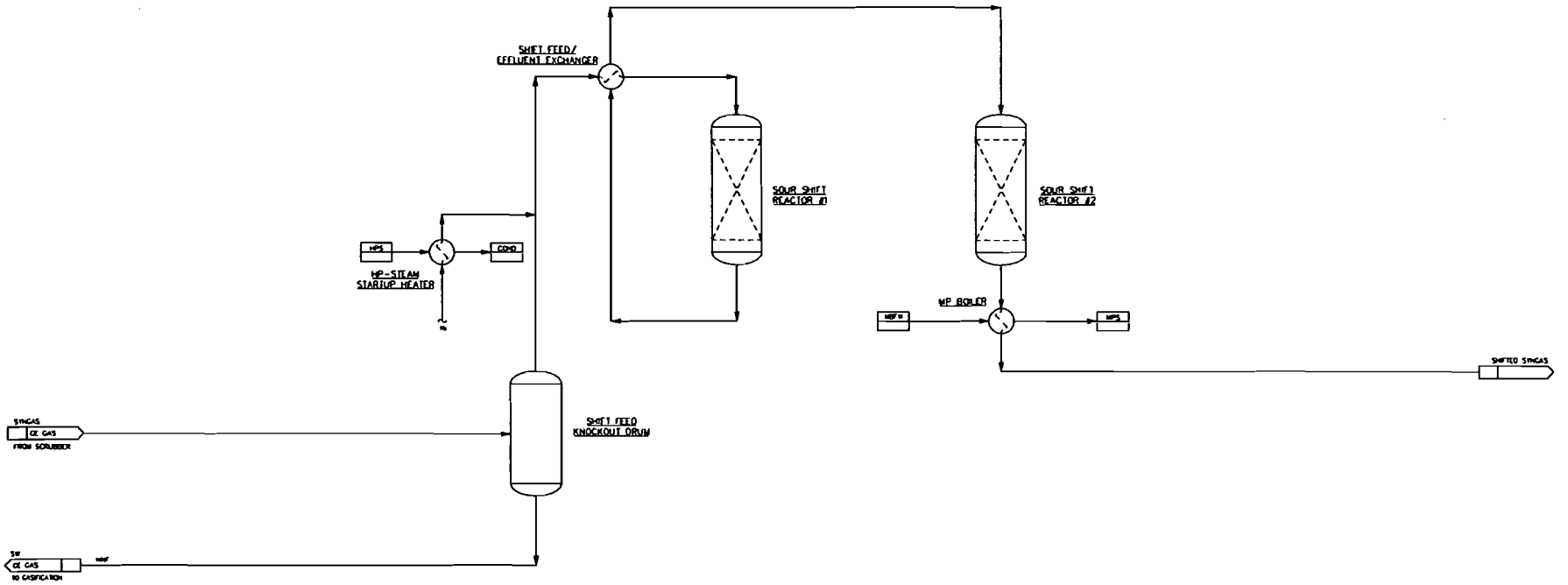

Source:
Fluor, Hydrogen Energy California, Kern County Power Project,
Flow Diagram, Sour Shift System; Drawing No: A3RW-PDF-24-006A, Rev. 1 (03/23/09)

FLOW DIAGRAM: SOUR SHIFT SYSTEM

May 2009 Hydrogen Energy California (HECA)
28067571 Kern County, California

URS

FIGURE 2-4

5/18/09 vsa..T:\HECA\GRAPHICS\2.0 Project Description\2-14_sour shift.ai

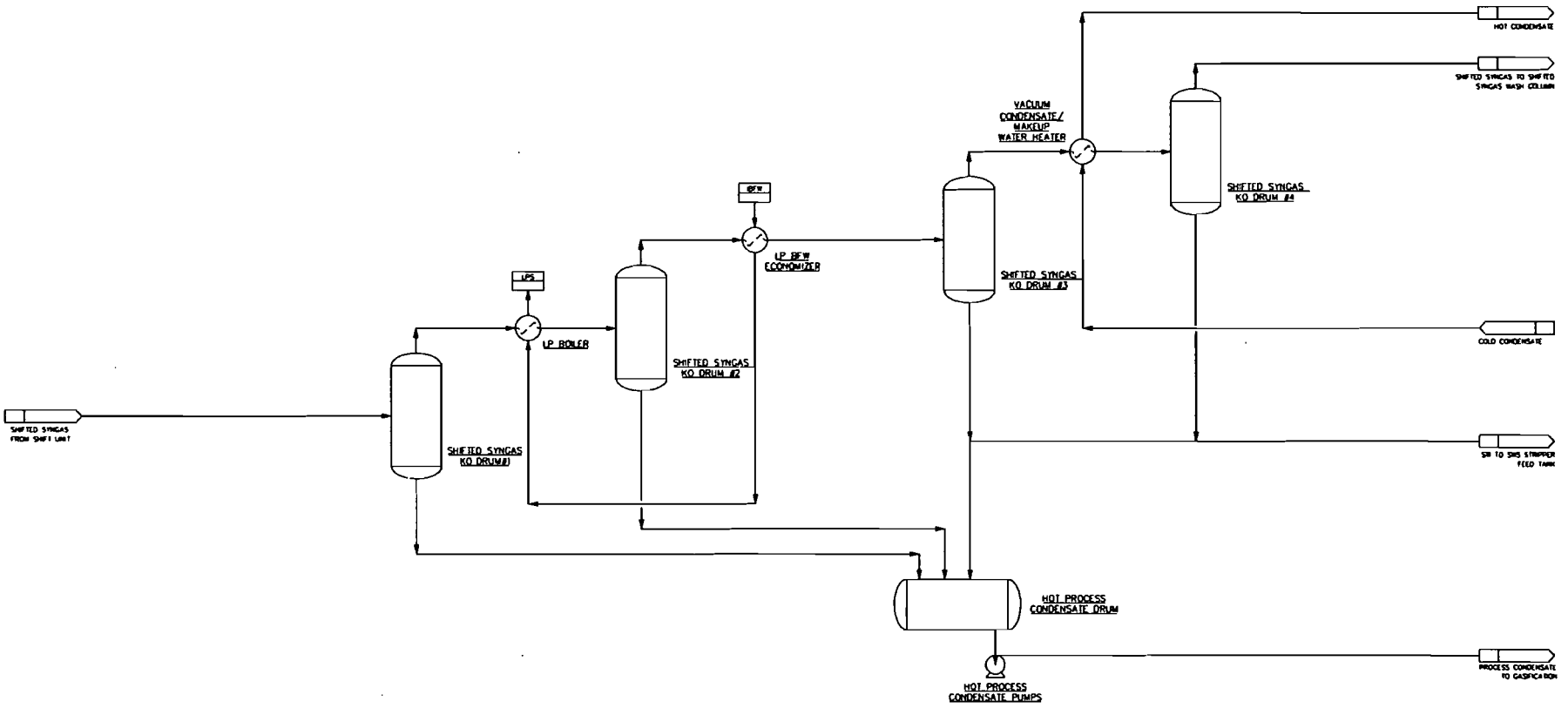

Source:
Fluor; Hydrogen Energy California, Kern County Power Project;
Flow Diagram, Low Temperature Gas Cooling (LTGC);
Drawing No: A3RW-PDF-25-006B, Rev. 1 (03/06/09)

FLOW DIAGRAM
LOW TEMPERATURE GAS COOLING

May 2009 Hydrogen Energy California (HECA)
28067571 Kern County, California

URS

FIGURE 2-5

5/18/09 vsa.:T:\HECA\GRAPHICS\2.0 Project Description\2-15_LTGC.ai

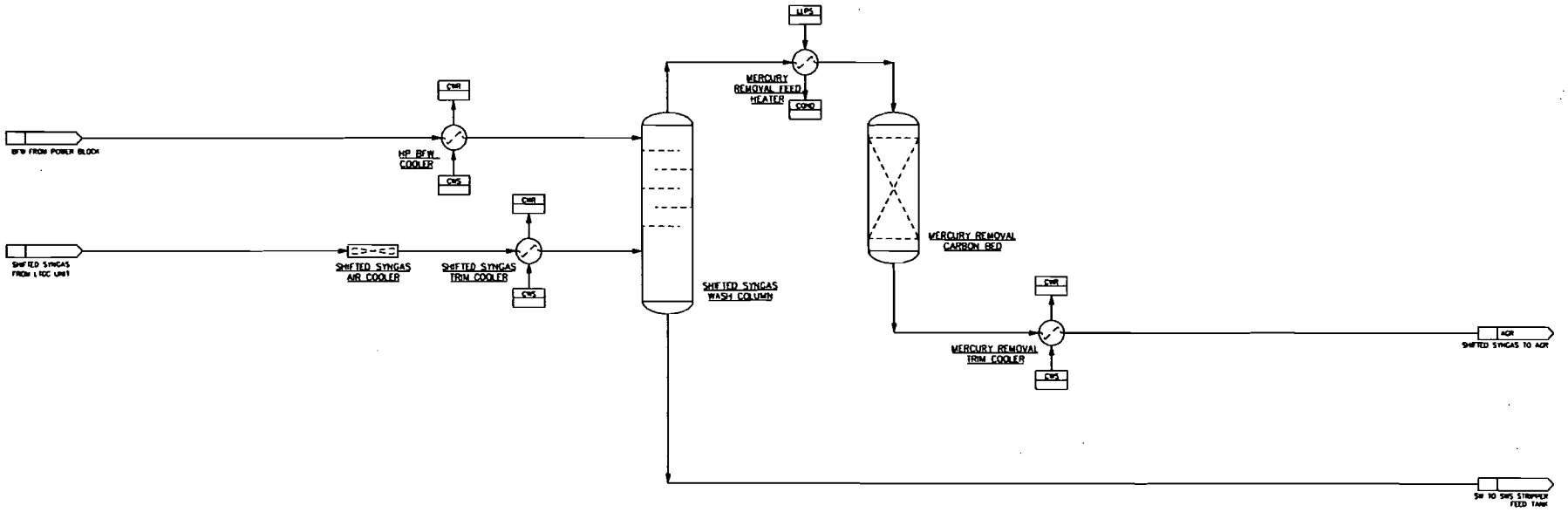

Source:
Fluor, Hydrogen Energy California, Kern County Power Project
Flow Diagram, Wash Colum and Mercury Removal;
Drawing No: A3RW-PDF-25-006C, Rev. 0 (06/04/08)

FLOW DIAGRAM: WASH COLUMN AND MERCURY REMOVAL

May 2009 Hydrogen Energy California (HECA)
28067571 Kern County, California

URS

FIGURE 2-6

5/18/09 vsa.. T:\HECA\GRAPHICS\2.0 Project Description\2-18_wash-mercury.ai

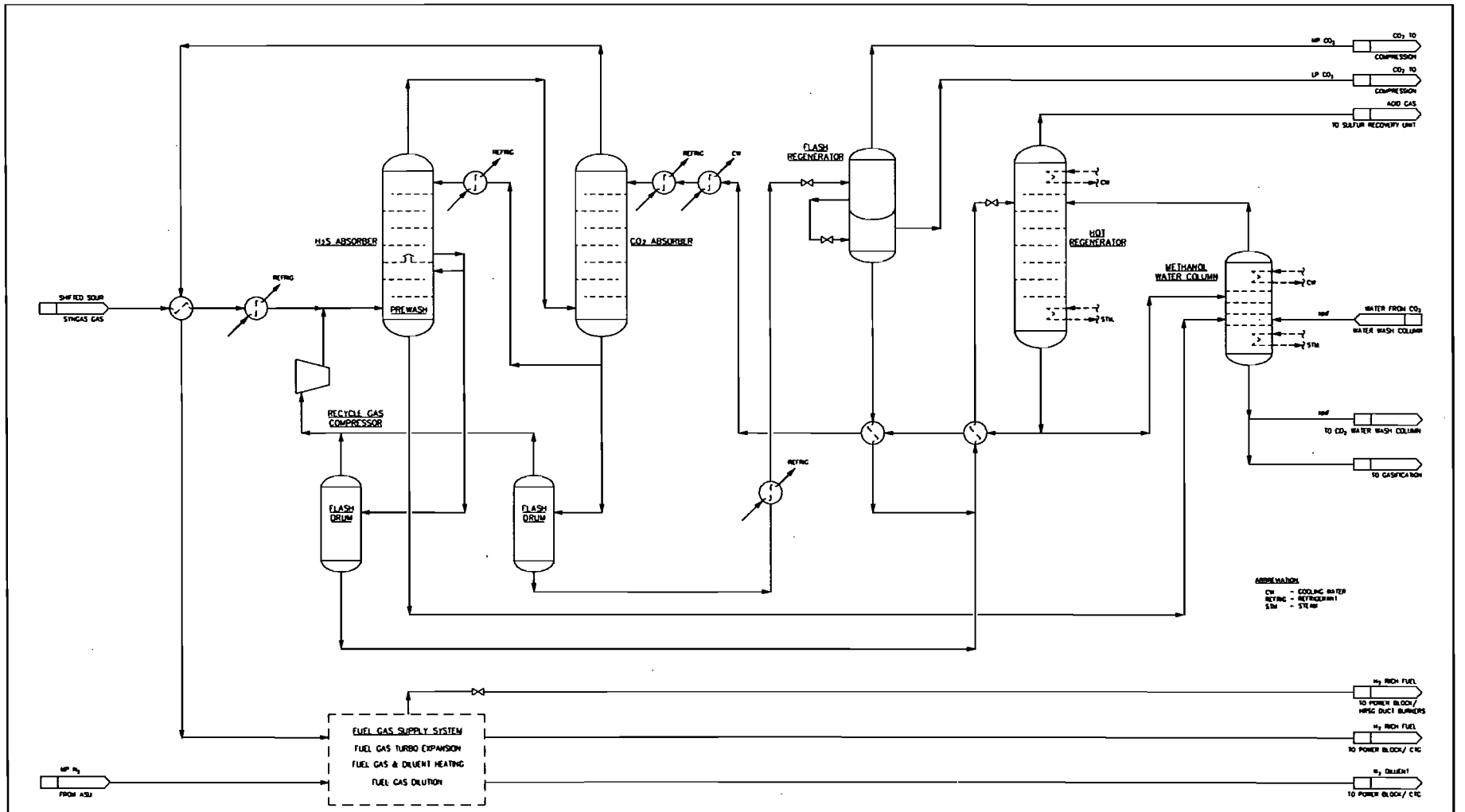

Source:
Fluor; Hydrogen Energy California, Kern County Power Project;
Flow Diagram, Rectisol Acid Gas Removal/Fuel Gas Supply Systems;
Drawing No: A3RW-PFD-25-007, Rev. 2 (04/13/09)

FLOW DIAGRAM
ACID GAS REMOVAL/
FUEL GAS SUPPLY SYSTEMS

May 2009 — Hydrogen Energy California (HECA)
28067571 — Kern County, California

URS

FIGURE 2-7

5/1809 vsa...T:\HECA\GRAPHICS\2.0 Project Description\2-17_rectisol acid gas.ai

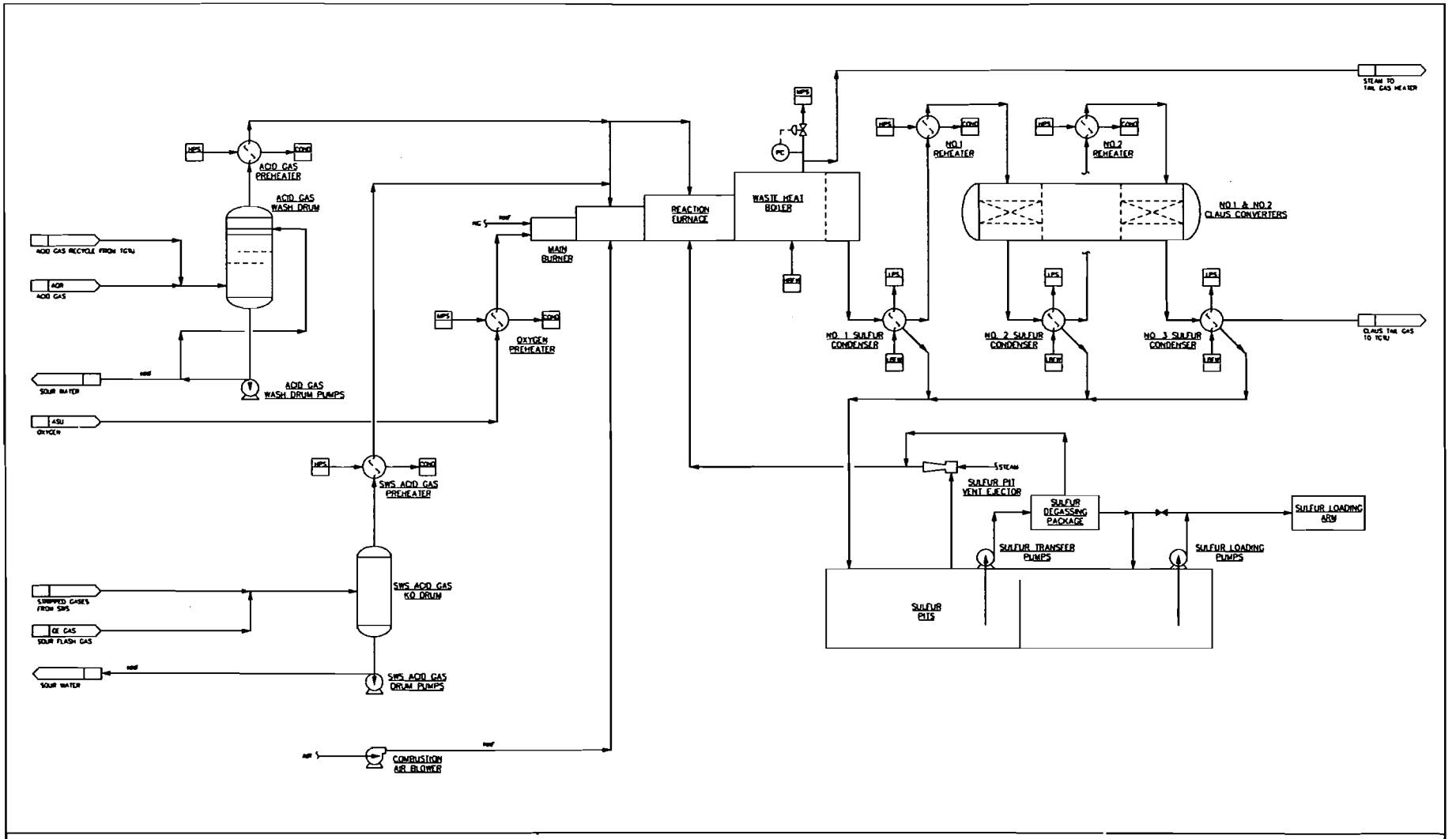

Source:
Fluor; Hydrogen Energy California, Kern County Power Project,
Flow Diagram, Sulfur Recovery Unit;
Drawing No: A3RW-PDF-25-008, Rev. 2 (06/04/08)

FLOW DIAGRAM
SULFUR RECOVERY UNIT

May 2009 — Hydrogen Energy California (HECA)
28067571 — Kern County, California

URS

FIGURE 2-11

5/20/09 vsa...T:\HECA\GRAPHICS\2.0 Project Description\2-25_sulfur.ai

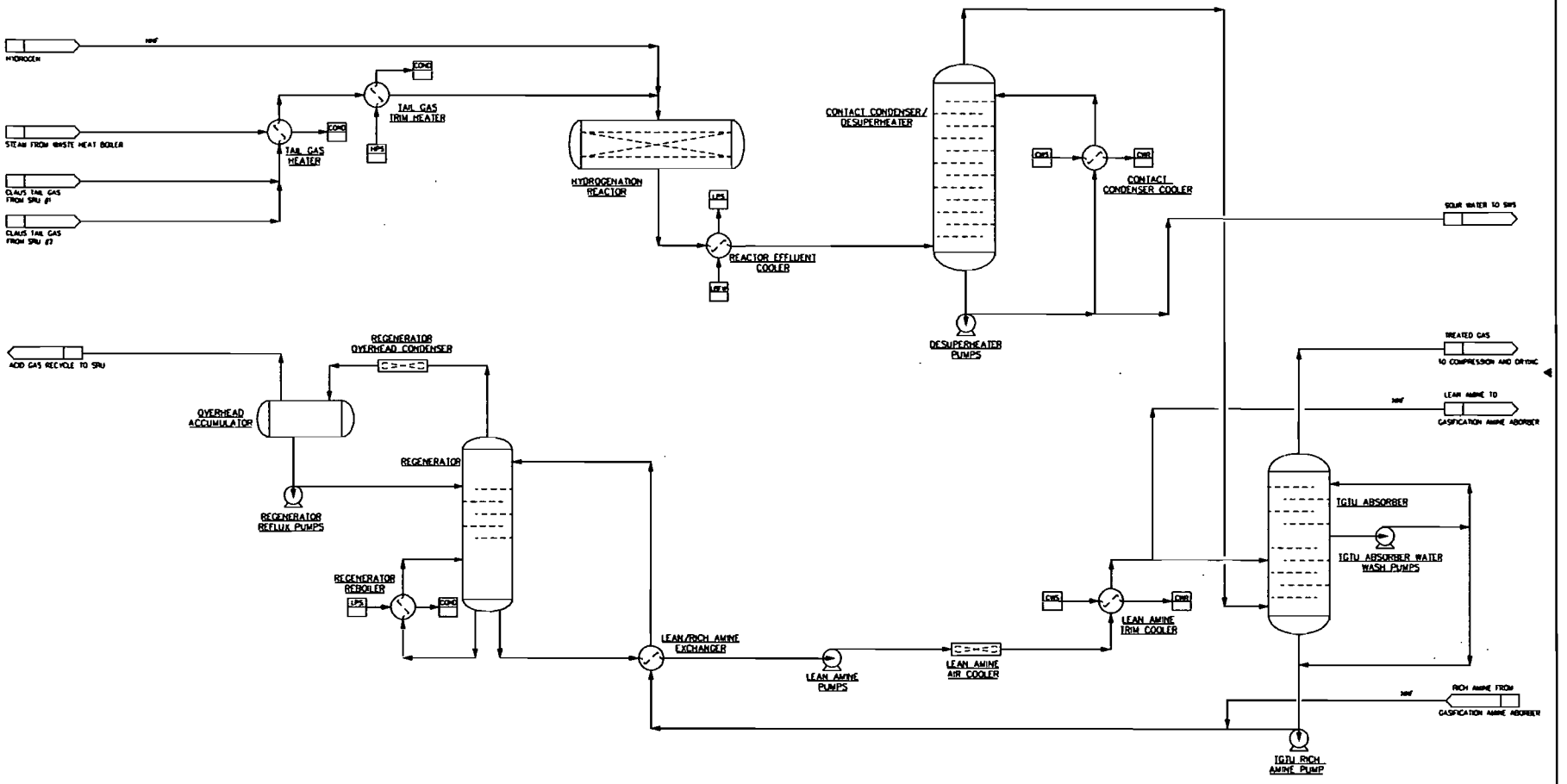

Source:
Fluor, Hydrogen Energy California, Kern County Power Project,
Flow Diagram, Tail Gas Treating Unit,
Drawing No: A3RW-PFD-25-009, Rev. 2 (04/13/09)

FLOW DIAGRAM
TAIL GAS TREATING UNIT

May 2009 — Hydrogen Energy California (HECA)
28067571 — Kern County, California

URS

FIGURE 2-12

5/20/09 vsa.:T:\HECA\GRAPHICS\2.0 Project Description\2-26_tailgas.ai

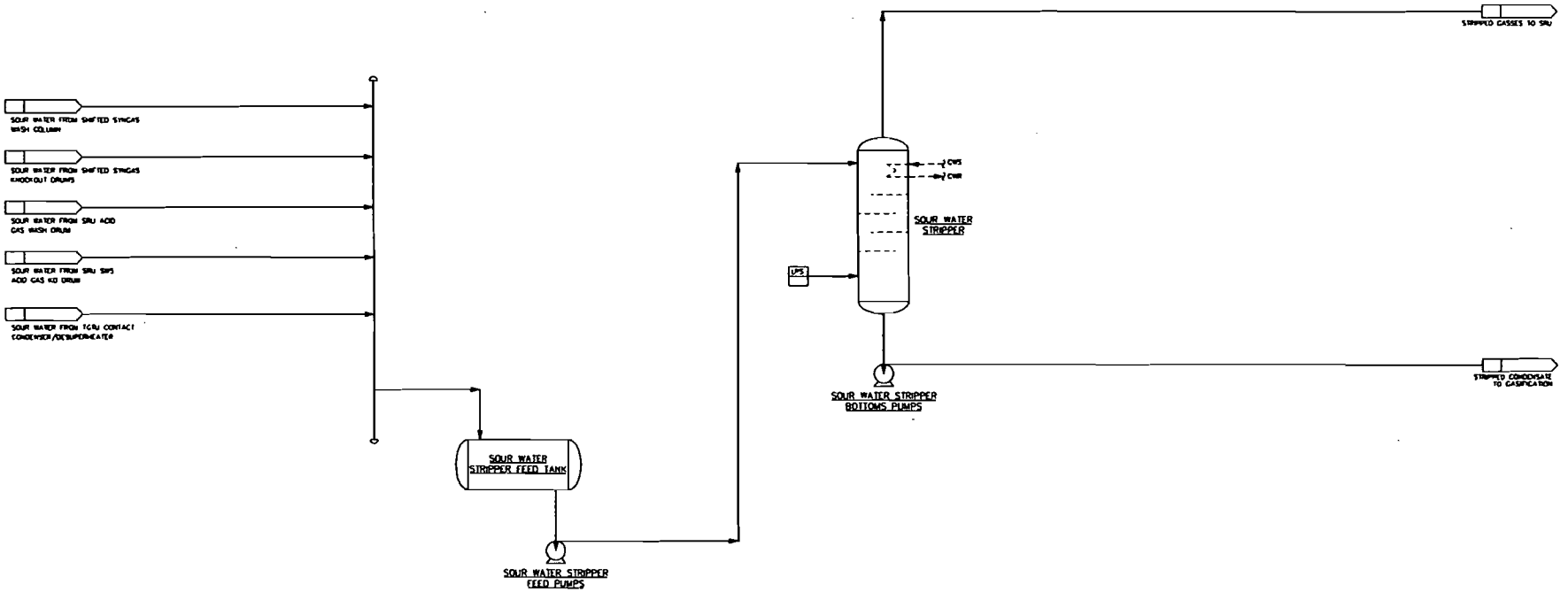

Source:
Fluor, Hydrogen Energy California, Kern County Power Project,
Flow Diagram, Sour Water Stripper;
Drawing No: A3RW-PDF-25-012, Rev. 1 (03/23/09)

FLOW DIAGRAM
SOUR WATER STRIPPER

May 2009 — Hydrogen Energy California (HECA)
28067571 — Kern County, California

URS

FIGURE 2-13

4/24/09 vsa...T:\HECA\GRAPHICS\2.0 Project Description\2-27_sour water.ai

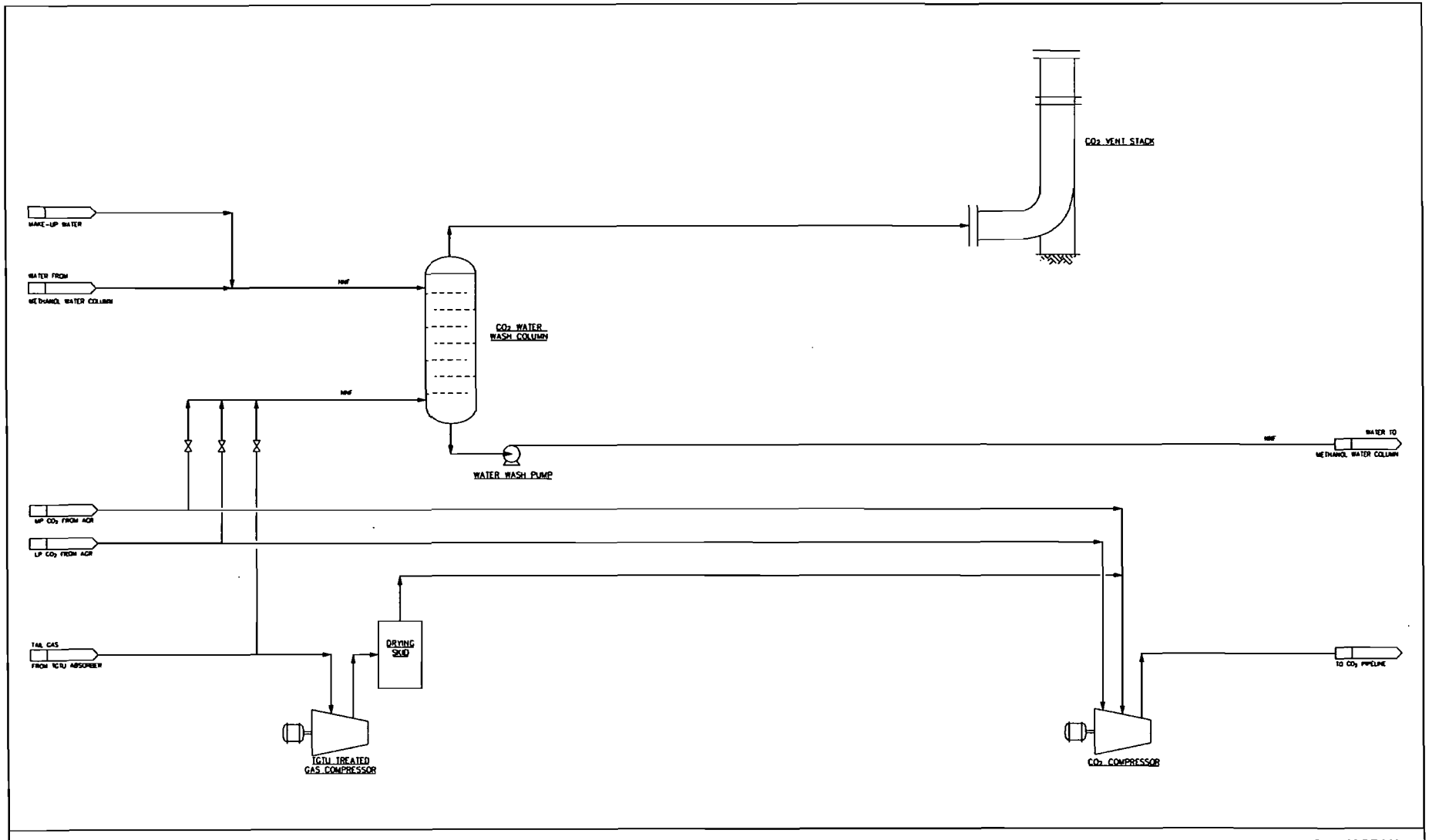

Source:
Fluor, Hydrogen Energy California, Kern County Power Project
Flow Diagram, CO2 Compression & Venting Systems;
Drawing No: A3RW-PDF-25-011, Rev. 1 (03/06/09)

FLOW DIAGRAM
CARBON DIOXIDE COMPRESSION AND VENTING SYSTEMS

May 2009 — Hydrogen Energy California (HECA)
28067571 — Kern County, California

URS — **FIGURE 2-14**

5/18/09 vsa.,T:\HECA\GRAPHICS\2.0 Project Description\2-3-_CO2 comp.ai

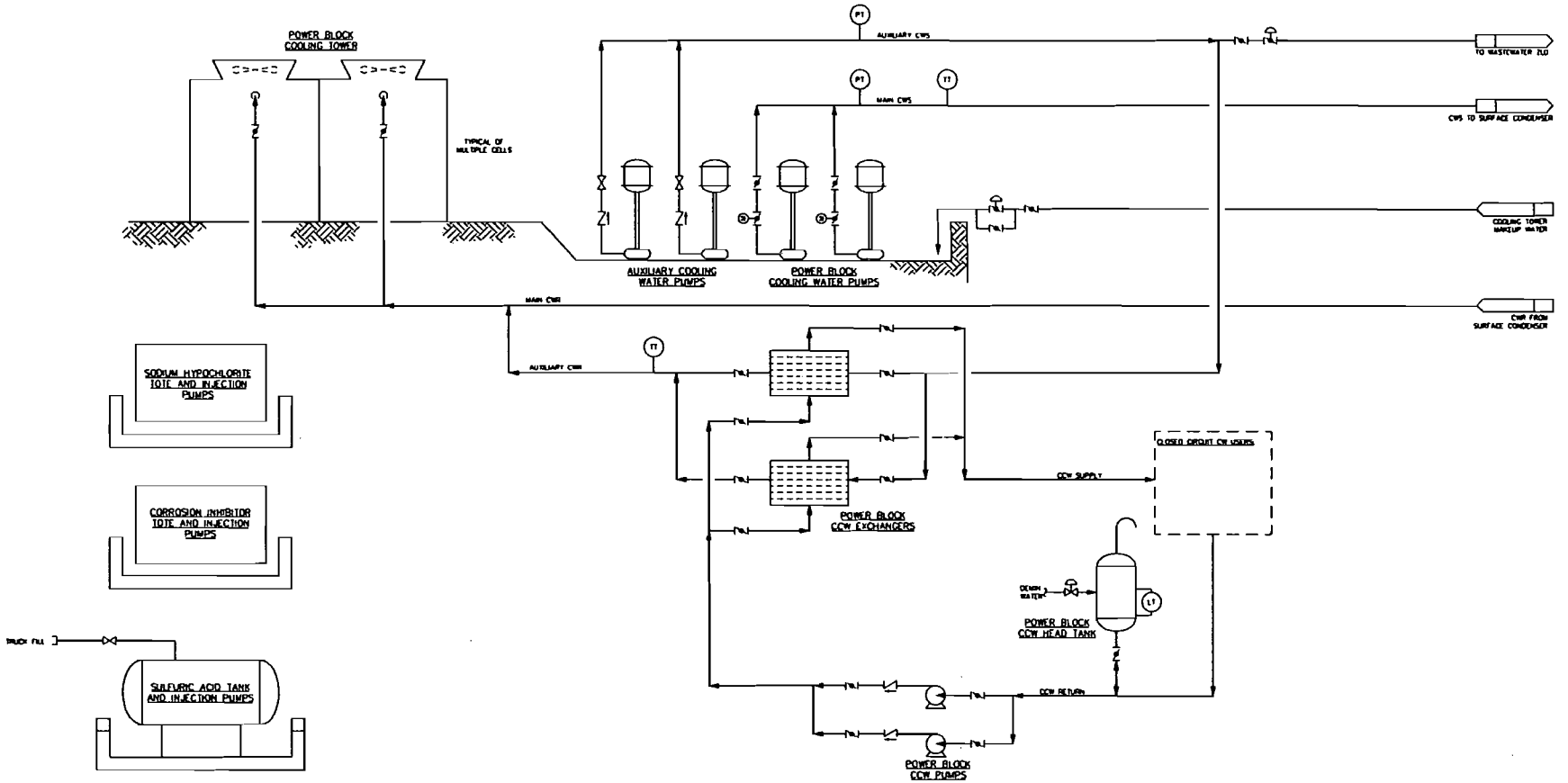

Source:
Fluor, Hydrogen Energy California, Kern County Power Project.
Flow Diagram, Cooling Water System,
Drawing No: A3RW-PDF-25-022, Rev. 1 (03/06/09)

FLOW DIAGRAM
COOLING WATER SYSTEM

May 2009 — Hydrogen Energy California (HECA)
28067571 — Kern County, California

URS

FIGURE 2-15

5/18/09 vsa..T:\HECA\GRAPHICS\2.0 Project Description\2-31_cooling water.ai

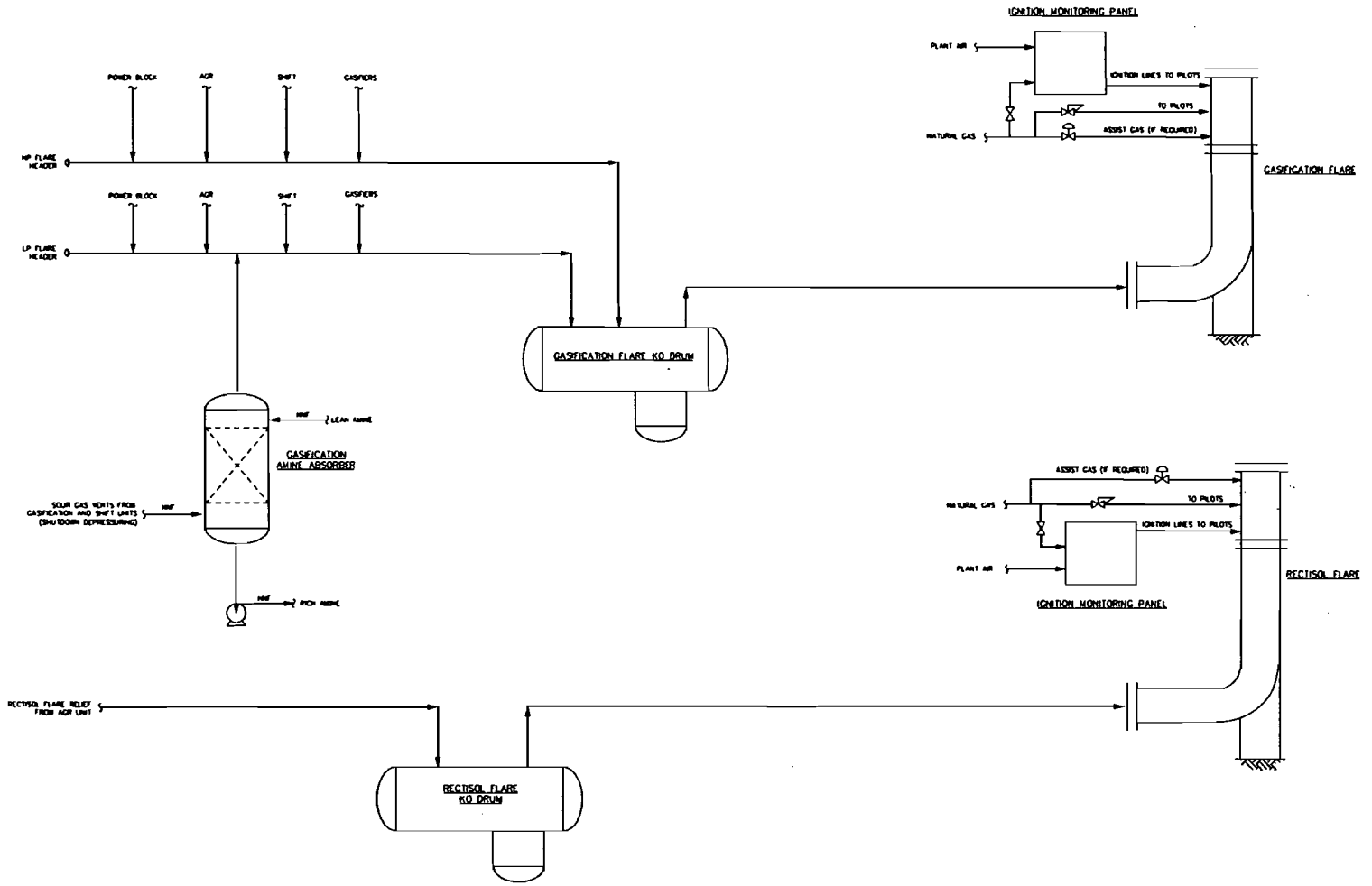

Source:
Fluor, Hydrogen Energy California, Kern County Power Project,
Flow Diagra, Gasification and Rectisol Flare Systems,
Drawing No. A3RW-PFD-25-025, Rev. 1 (03/23/09)

FLOW DIAGRAM
GASIFICATION AND RECTISOL
FLARE SYSTEMS

May 2009 — Hydrogen Energy California (HECA)
28067571 — Kern County, California

URS

FIGURE 2-16

5/18/09 vsa., T:\HECA\GRAPHICS\2.0 Project Description\2-32_gas-rec flare.ai

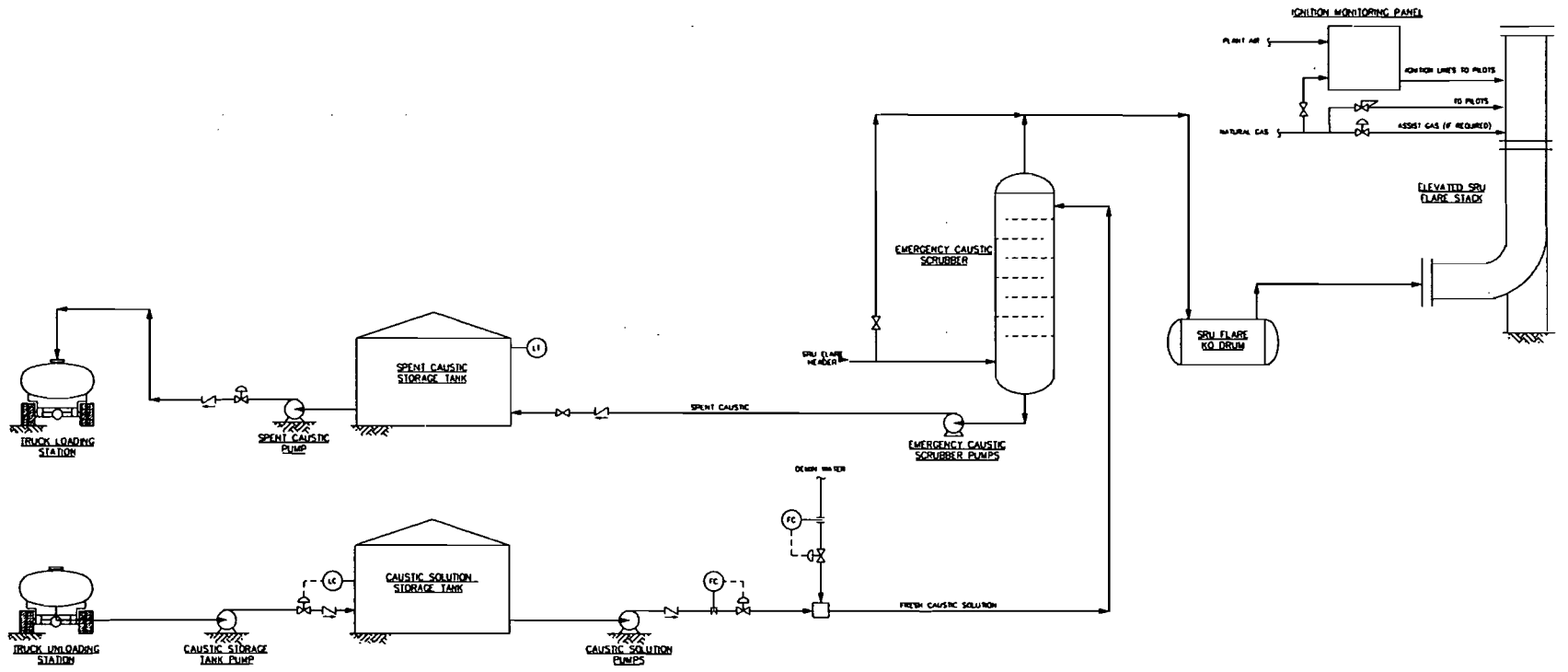

Source:
Fluor, Hydrogen Energy California, Kern County Power Project,
Flow Diagram, SRU Flare System;
Drawing No. A3RW-PDF-25-017, Rev. 2 (03/23/09)

FLOW DIAGRAM
SRU FLARE SYSTEM

May 2009 — Hydrogen Energy California (HECA)
28067571 — Kern County, California

URS

FIGURE 2-17

5/18/09 vsa..T:\HECA\GRAPHICS\2.0 Project Description\2-33_SRU flare.ai

APPENDIX E
Fugitive Emission Calculations

HECA - Total VOC Content of the Gas In Each Process Area	Process Area												
	1	2	3	4	5	6	7	8	9	10	11	12	13
	Methanol	Syn Gas *	Flash Gas - Gasification *	Shifted Syn Gas	Propylene	Sour Water	H_2S Laden Methanol	CO_2 Laden Methanol	Acid Gas	Ammonia-Laden Gas	Sulfur	TGTU Process Gas	TGTU Amine
Total weight percentage of VOC in the gas in each process area	100.00%			0.01%	100.00%	0.00%	53.51%	64.10%	0.54%	0.07%	0.00%	0.03%	43.96%

Note: The following compounds are included as VOCs, although not all compounds are found in the gas in each process area: CH3OH, C3H6, COS, HCN, and MDEA.
* The composition of the Syn Gas and the Flash Gas - Gasifications streams is confidential information.

	Compound	Wt %												
		Methanol Stream	Syn Gas	Flash Gas - Gasification	Shifted Syn Gas Stream	Propylene Stream	Sour Water Stream	H_2S Laden Methanol Stream	CO_2 Laden Methanol Stream	Acid Gas Stream	Ammonia-Laden Gas Stream	Sulfur Stream	TGTU Process Gas Stream	TGTU Amine Stream
	CO_2	0.00%			90.43%	0.00%	2.50%	44.68%	35.81%	60.32%	68.32%	0.00%	64.65%	1.98%
	CO	0.00%			1.48%	0.00%	0.001%	0.03%	0.04%	0.06%	0.36%	0.00%	0.31%	0.00%
	CH_4	0.00%			0.06%	0.00%	0.00%	0.003%	0.003%	0.002%	0.002%	0.00%	0.00%	0.00%
	H_2S	0.00%			2.05%	0.00%	0.18%	1.73%	0.0001%	39.04%	5.98%	0.03%	1.86%	0.32%
VOC	COS	0.00%			0.01%	0.00%	0.00%	0.01%	0.00%	0.51%	0.02%	0.00%	0.03%	0.00%
	CH_3OH	100.00%			0.00%	0.00%	0.00%	53.51%	64.10%	0.03%	0.00%	0.00%	0.00%	0.00%
	C_3H_6	0.00%			0.00%	100.00%	0.00%	0.00%	0.00%	0.00%	0.00%	0.00%	0.00%	0.00%
	NH_3	0.00%			0.00%	0.00%	0.25%	0.00%	0.00%	0.00%	7.36%	0.00%	0.00%	0.00%
	HCN	0.00%			0.00%	0.00%	0.00%	0.00%	0.00%	0.00%	0.05%	0.00%	0.00%	0.00%
	MDEA	0.00%			0.00%	0.00%	0.00%	0.00%	0.00%	0.00%	0.00%	0.00%	0.00%	43.96%
	Total	100.00%			94.03%	100.00%	2.93%	99.96%	99.95%	99.98%	82.10%	0.03%	66.85%	46.25%
	Percentage of VOC of the entire gas stream *	100.00%			0.01%	100.00%	0.00%	53.51%	64.10%	0.54%	0.07%	0.00%	0.03%	43.96%

* Per District policy (SSP-2015), VOC emissions are not assessed to components handling fluid streams with a VOC content of 10% of less by weight.

Equipment Type	Service	Emission Factor ** (kg/hr/source)		Emission Factor (lb/hr/source)		Control Efficiency **
Valves	Gas	0.00597		0.0132		92%
Valves	Light liquid	0.00403		0.0089		88%
Valves	Heavy liquid	0.00023		0.0005		0%
Pump seals	Light liquid	0.0199		0.0439		75%
Pump seals	Heavy liquid	0.00862		0.0190		0%
Compressor seals	Gas	0.228		0.5027		0%
Pressure relief valves	Gas	0.104		0.2293		0%
Connectors	All	0.00183		0.0040		93%
Open-ended lines	All	0.0017		0.0037		0%
Sampling connectors	All	0.015		0.0331		0%

** Notes:
** Emission factors and control efficiencies are from EPA's 1995 "Protocol for Equipment Leak Emission Estimates".
** Emission factors are from Table 2-1 (SOCMI Average Emission Factors)
** Control efficiencies are from Table 5-2 (Control Effectiveness for an LDAR Program at a SOCMI Process Unit)
** The permittee proposes to implement an LDAR program for the process stream identified as #1, 5, 7-10, so the control efficiencies will apply to those stream.

COMPONENT COUNT	Process Area													
	1	2	3	4	5	6	7	8	9	10	11	12	13	
	Methanol	Syn Gas	Flash Gas - Gasification	Shifted Syn Gas	Propylene	Sour Water	H_2S Laden Methanol	CO_2 Laden Methanol	Acid Gas	Ammonia-Laden Gas	Sulfur	TGTU Process Gas	TGTU Amine	Total
Valves - Gas	50			198	188	0	94	79	161	157	0	72	0	999
Valves - Light Liquid	416			0	288	0	358	79	0	0	0	0	0	1141
Valves - Heavy Liquid	0			0	0	508	0	0	0	0	68	0	264	840
Pumps - Light Liquid	7			0	3	0	7	0	0	0	0	0	0	17
Pumps - Heavy Liquid	0			0	0	17	0	0	0	0	4	0	5	26
Compressors	0			1	1	0	0	0	0	0	0	0	0	2
Connectors	1225			632	1432	1410	1323	516	492	407	297	290	746	8770
Total	1698			831	1912	1935	1782	674	653	564	369	362	1015	11795

CALCULATED EMISSIONS (BY COMPONENT) (lb/day)

Valves - Gas	1.26351181		62.54383481	4.7508044	0	2.37540221	1.99634867	4.06850804	3.967427	0	22.743213	0
Valves - Light Liquid	10.6444839		0	7.3692581	0	9.16039716	2.02142842	0	0	0	0	0
Valves - Heavy Liquid	0		0	0	6.1821072	0	0	0	0	0.827526	0	3.2127486
Pumps - Light Liquid	1.8426214		0	0.7896949	0	1.8426214	0	0	0	0	0	0
Pumps - Heavy Liquid	0		0	0	7.7535604	0	0	0	0	1.824367	0	2.2804589
Compressors	0		12.06368064	12.063681	0	0	0	0	0	0	0	0
Connectors	8.30290757		61.19460737	9.7059295	136.52594	8.96714017	3.497388	3.33471879	2.758599	28.75759	28.079804	72.232875
Total (lb/day):	22.05		135.80	34.68	150.46	22.35	7.52	7.40	6.73	31.41	50.82	77.73

CALCULATED EMISSIONS (BY COMPOUND) (lb/day)	Process Area													
	1	2	3	4	5	6	7	8	9	10	11	12	13	
	Methanol	Syn Gas	Flash Gas - Gasification	Shifted Syn Gas	Propylene	Sour Water	H_2S Laden Methanol	CO_2 Laden Methanol	Acid Gas	Ammonia-Laden Gas	Sulfur	TGTU Process Gas	TGTU Amine	
CO_2	0.00E+00			1.23E+02	0.00E+00	3.76E+00	9.98E+00	2.69E+00	4.47E+00	4.60E+00	0.00E+00	3.29E+01	1.54E+00	
CO	0.00E+00			2.01E+00	0.00E+00	2.11E-03	7.71E-03	2.69E-03	4.78E-03	2.45E-02	0.00E+00	1.55E-01	0.00E+00	
CH_4	0.00E+00			8.34E-02	0.00E+00	0.00E+00	6.52E-04	2.29E-04	1.30E-04	1.39E-04	0.00E+00	0.00E+00	0.00E+00	
H_2S	0.00E+00			2.78E+00	0.00E+00	2.74E-01	3.86E-01	7.26E-06	2.89E+00	4.02E-01	9.31E-03	9.45E-01	2.46E-01	
COS	0.00E+00			7.81E-03	0.00E+00	0.00E+00	1.67E-03	0.00E+00	3.78E-02	1.46E-03	0.00E+00	1.75E-02	0.00E+00	
CH_3OH	2.21E+01			0.00E+00	0.00E+00	0.00E+00	1.20E+01	4.82E+00	2.51E-03	0.00E+00	0.00E+00	0.00E+00	0.00E+00	
C_3H_6	0.00E+00			0.00E+00	3.47E+01	0.00E+00	0.00E+00	0.00E+00	0.00E+00	0.00E+00	0.00E+00	0.00E+00	0.00E+00	
NH_3	0.00E+00			0.00E+00	0.00E+00	3.76E-01	0.00E+00	0.00E+00	0.00E+00	4.95E-01	0.00E+00	0.00E+00	0.00E+00	
HCN	0.00E+00			0.00E+00	0.00E+00	0.00E+00	0.00E+00	0.00E+00	0.00E+00	3.14E-03	0.00E+00	0.00E+00	0.00E+00	
MDEA	0.00E+00			0.00E+00	0.00E+00	0.00E+00	0.00E+00	0.00E+00	0.00E+00	0.00E+00	0.00E+00	0.00E+00	3.42E+01	
VOC (lb/day) *	22.05	x	x	x	34.68	x	11.96	4.82	x	x	x	x	34.17	107.67
CO (lb/day)	0.00	20.99	9.41	2.01	0.00	0.00	0.01	0.00	0.00	0.02	0.00	0.16	0.00	32.61

* Per District policy (SSP-2015), VOC emissions are not assessed to components handling fluid streams with a VOC content of 10% of less by weight.

	CALCULATED EMISSIONS (BY COMPOUND) (ton/yr)	Process Area													
		1	2	3	4	5	6	7	8	9	10	11	12	13	
		Methanol	Syn Gas	Flash Gas - Gasification	Shifted Syn Gas	Propylene	Sour Water	H_2S Laden Methanol	CO_2 Laden Methanol	Acid Gas	Ammonia-Laden Gas	Sulfur	TGTU Process Gas	TGTU Amine	
	CO_2	0.00E+00			2.24E+01	0.00E+00	6.87E-01	1.82E+00	4.91E-01	8.15E-01	8.39E-01	0.00E+00	6.00E+00	2.81E-01	
	CO	0.00E+00			3.67E-01	0.00E+00	3.85E-04	1.41E-03	4.90E-04	8.72E-04	4.47E-03	0.00E+00	2.83E-02	0.00E+00	
	CH_4	0.00E+00			1.52E-02	0.00E+00	0.00E+00	1.19E-04	4.18E-05	2.37E-05	2.54E-05	0.00E+00	0.00E+00	0.00E+00	
	H_2S	0.00E+00			5.07E-01	0.00E+00	4.99E-02	7.04E-02	1.33E-06	5.28E-01	7.34E-02	1.70E-03	1.72E-01	4.48E-02	
VOC	COS	0.00E+00			1.43E-03	0.00E+00	0.00E+00	3.04E-04	0.00E+00	6.90E-03	2.66E-04	0.00E+00	3.19E-03	0.00E+00	
	CH_3OH	4.02E+00			0.00E+00	0.00E+00	0.00E+00	2.18E+00	8.79E-01	4.57E-04	0.00E+00	0.00E+00	0.00E+00	0.00E+00	
	C_3H_6	0.00E+00			0.00E+00	6.33E+00	0.00E+00	0.00E+00	0.00E+00	0.00E+00	0.00E+00	0.00E+00	0.00E+00	0.00E+00	
	NH_3	0.00E+00			0.00E+00	0.00E+00	6.86E-02	0.00E+00	0.00E+00	0.00E+00	9.03E-02	0.00E+00	0.00E+00	0.00E+00	
	HCN	0.00E+00			0.00E+00	0.00E+00	0.00E+00	0.00E+00	0.00E+00	0.00E+00	5.73E-04	0.00E+00	0.00E+00	0.00E+00	
	MDEA	0.00E+00			0.00E+00	0.00E+00	0.00E+00	0.00E+00	0.00E+00	0.00E+00	0.00E+00	0.00E+00	0.00E+00	6.24E+00	
	VOC (ton/yr)	4.02	x	x	x	6.33	x	2.18	0.88	x	x	x	x	6.24	19.65
	CO (ton/yr)	0.00	3.83	1.72	0.37	0.00	0.00	0.00	0.00	0.00	0.00	0.00	0.03	0.00	5.95

Based on the location of the stream identified above, steams #1 through 10 will be assessed to the gasification system (S-7616-2), and streams #11 through 13 will be assessed to the sulfur recovery system (S-7616-5). Therefore, fugitive emissions in the amounts listed below will be assessed to those units as:

PE fugitive	VOC (lb/day)	VOC (lb/yr)	CO (lb/day)	CO (lb/yr)
S-7616-2	73.51	26,830	32.5	11,844
S-7616-5	34.17	12,471	0.2	57

APPENDIX F
Appendix S Applicability Determination

40 CFR Part 51 - Appendix S requirement for PM2.5

PM2.5 emissions from the stationary source are tabulated below. On May 8, 2008 EPA finalized regulations to implement NSR program for PM2.5. In determining the PM2.5 emissions only the "front half" or filterable (not condensable) fraction is considered.

Please note that the PM2.5 fraction of the PM10 for all the internal combustion and external combustion equipment has been conservatively assumed to be 1.0. However, for the feedstock handling (S-7616-1-0) and the cooling towers (S-7616-4-0, -11-0, and -12-0), factors from the South Coast Air Quality Management District (SCAQMD) Methodology to Calculate Particulate Matter (PM) 2.5 and PM 2.5 Significance Thresholds (October 2006) will be utilized to calculate the PM2.5 emissions. Appendix A of that document lists the PM2.5 fractions for various categories, which are based on the California Air Resources Board (ARB) CEIDARS (California Emission Inventory Development and Reporting System). According to that document, the PM2.5 fractions of the PM10 for cooling towers and for the handling of bulk materials are 0.600 and 0.292, respectively, as shown in the table below:

SCC MAIN CATEGORY	SCC SUBCATEGORY	PM2.5 FRACTION OF TOTAL PM	PM10 FRACTION OF TOTAL PM	PM2.5 FRACTION OF PM10
COOLING TOWER		0.420	0.700	0.600
MINERAL PROCESS LOSS	BRICK, CEMENT, FIBERGLASS, GLASS MFG.	0.146	0.500	0.292
	COAL CLEANING, SURFACE COAL MINE, NONMETALLIC MINERAL	0.146	0.500	0.292
	GRINDING, CRUSHING, SURFACE BLASTING	0.146	0.500	0.292
	LOADING AND UNLOADING BULK MATERIALS	0.146	0.500	0.292

Based on the above information, the PM2.5 SSPE2 for the facility is calculated in the table below:

PM10 and PM2.5 SSPE2 (lb/yr)				
Permit Unit	Description	PM2.5 Fraction of PM10	PM10 (lb/yr)	PM2.5 (lb/yr)
S-7616-1-0	Feedstock Handling	0.29	7,415	2,165
S-7616-2-0	Gasifier Heaters	1.00	492	492
S-7616-3-0	Flare	1.00	13	13
S-7616-4-0	Cooling Tower	0.60	7,927	4,756
S-7616-5-0	SRU / Thermal Oxidizer	1.00	666	666
S-7616-6-0	Flare	1.00	12	12
S-7616-7-0	Flare	1.00	8	8
S-7616-8-0	CO2 Vent	1.00	0	0
S-7616-9-0	Combustion Turbine Generator	1.00	164,739	164,739
S-7616-11-0	Cooling Tower	0.60	7,533	4,520
S-7616-12-0	Cooling Tower	0.60	32,794	19,676
S-7616-13-0	Auxiliary Boiler	1.00	1,555	1,555
S-7616-14-0	Emergency Engine	1.00	23	23
S-7616-15-0	Emergency Engine	1.00	23	23
S-7616-16-0	Emergency Engine	1.00	1	1
SSPE2 (lb/yr)			223,201	198,650

APPENDIX G
Compliance Certification

hydrogen energy

RECEIVED

JUN 16 2010

SJVAPCD
Southern Region

June 15, 2010

Leonard Scandura
San Joaquin Valley Air Pollution Control District
34946 Flyover Court
Bakersfield, CA 93308

Re: Hydrogen Energy California LLC; Project Number S-1093741; Application Numbers S-7616-1-0 through S-7616-18-0

Dear Mr. Scandura:

At the request of San Joaquin Valley Air Pollution Control District (SJVAPCD), Hydrogen Energy California is submitting this letter. As required by SJVAPCD Rule 2201 Sections 4.15.2, HECA will provide statewide certification of compliance prior to issuance of the Final Determination of Compliance.

If you have any questions regarding this matter, please do not hesitate to call me at (949) 349-6411.

Respectfully,

Gregory D. Skannal
Manager, HSSE
Hydrogen Energy International LLC

Cc: Bill Gibbons, HECA
Asik Khajetoorians, HECA
Mike Carroll, Latham & Watkins LLP

One World Trade Center, Suite 1600, Long Beach, CA 90831-1600 Main (+1) 562-276-1543 Fax (+1) 562-276-1571 www.hydrogenenergy.com

TABLE OF CONTENTS

6 **Alternatives** **6-1**

6.1 Introduction 6-1
6.1.1 Project Objectives 6-1
6.2 No Project Alternative 6-2
6.3 Site and Linear Facilities Location Alternatives 6-3
6.3.1 Proposed and Alternative Sites 6-4
6.3.2 Project Linear Facilities 6-5
6.3.2.1 Electrical Transmission Line 6-5
6.3.2.2 Natural Gas Line and Freshwater Line 6-6
6.4 Alternative Generating Technologies and Configurations 6-6
6.4.1 General Electric Gasification Technology 6-6
6.4.2 Acid Gas Removal System 6-7
6.4.3 General Electric 7FB Combustion Turbine 6-8
6.4.4 Conclusion 6-8
6.5 Alternative Water Supplies 6-8
6.5.1 Water Supply Alternatives Decision Analysis 6-9
6.5.2 Wastewater Being Discharged to the Ocean 6-10
6.5.3 Ocean Water 6-10
6.5.4 Brackish Water 6-10
6.5.4.1 Industrial Wastewater 6-10
6.5.4.2 Semitropic Water Storage District 6-11
6.5.4.3 Buena Vista Water Storage District 6-12
6.5.5 Inland Wastewaters 6-12
6.5.5.1 Municipal Effluent 6-12
6.5.5.2 Agricultural Wastewater 6-13
6.5.6 Other Inland Waters 6-13
6.5.6.1 State Water Project 6-13
6.5.6.2 Fresh Groundwater 6-13
6.5.6.3 Municipal Water Supply 6-13
6.6 Water Usage Minimization study 6-13
6.7 Alternative Wastewater Disposal Options 6-14
6.7.1 Wastewater Disposal Alternatives Decision Analysis 6-15
6.7.2 ZLD System 6-15
6.7.3 Evaporation Pond 6-16
6.7.4 Injection Disposal Well 6-16
6.7.5 Disposal to Wastewater Treatment Plant 6-16
6.7.6 Surface Discharge 6-16
6.7.7 Off-Site Treatment 6-17
6.8 References 6-17

TABLE OF CONTENTS

Tables

Table 6-1 Alternative Sites Reviewed and Status
Table 6-2 Evaluation of Water Supply Options
Table 6-3 Evaluation of Wastewater Disposal Options

Figures

Figure 6-1 Alternative Sites

Appendix (in Volume II)

Appendix X Water Usage Minimization Study

6.1 INTRODUCTION

This section of the Application for Certification addresses requirements of the Warren-Alquist State Energy Resources Development and Conservation Act (Public Resources Code Section 25500 et seq.) and implementing regulations (Title 20 California Code of Regulations Section 1701 et seq.) as well as the requirements of the California Environmental Quality Act (Public Resources Code Section 25500 et seq.) and implementing regulations (Title 14 California Code of Regulations Section 15000 et seq.) that an applicant discuss a range of reasonable alternatives to the project or the location of the project, including the no project alternative, which would feasibly attain most of the basic objectives of the project, but would avoid or substantially lessen any of the significant effects of the project, and an evaluation of the comparative merits of the alternatives.

California is the most populous state in the United States. Its population is projected to continue to grow at a rate of just over 1 percent per year until 2030, putting California above the national population growth rate of about 0.8 percent per year. The combination of continued population growth and long-term economic prosperity will result in robust growth in energy demand. The California Energy Commission (CEC) estimates that to meet peak energy demand growth, the state will need to add more than 9,000 megawatts (MW) in capacity between 2008 and 2018 (CEC, 2007).

At the same time, the state has set aggressive environmental objectives, including reductions in levels of greenhouse gas emissions. The Hydrogen Energy California (HECA or Project) represents an opportunity to satisfy several of California's environmental policy objectives regarding low-carbon power generation and greenhouse gas reduction while supporting sustainable economic growth. The Project will respond to the future energy demands of California, and will play an important role in eventually meeting the state's objective of reducing carbon dioxide (CO_2) emissions to 1990 levels by 2020.

6.1.1 Project Objectives

A critical component of the alternatives analysis is the ability of the alternatives to feasibly attain most of the basic objectives of the project. Project objectives are summarized as follows:

- Provide an efficient, reliable, and environmentally sound power generating facility to help meet future electrical power needs.
- Mitigate impacts related to climate change by dramatically reducing average annual greenhouse gas (GHG) emissions relative to the GHG emitted from a conventional power plant by capturing and sequestering carbon dioxide emissions.
- Facilitate and support the development of hydrogen infrastructure in California by supplementing the quantities of hydrogen available for future energy and transportation technologies.

- Conserve domestic energy supplies and enhance energy security by using a by-product from the oil refining process to generate electricity, and enhancing production of domestic petroleum reserves.

- Minimize environmental impacts associated with the construction and operation of the Project through choice of technology, project design and implementation of feasible mitigation measures, if necessary.

- Site the Project at a location over which Hydrogen Energy International (HEI) is reasonably likely to obtain control, and which offers reasonable access to necessary infrastructure, including natural gas and non-potable water supply, transmission interconnection, and geologic formations appropriate for CO_2 enhanced oil recovery (EOR) and sequestration (storage)[1].

- Ensure the economic viability of the Project by minimizing costs while achieving other Project objectives.

In determining whether or not a particular alternative could feasibly obtain the objectives set forth above, additional specific evaluation criteria were used to evaluate alternative Project Sites and linear facilities, generating technologies, and water supplies. These additional criteria are set forth below in the relevant subsections.

6.2 NO PROJECT ALTERNATIVE

Under the No Project Alternative, the Project would not be developed. The potential environmental impacts identified in this Revised Application for Certification associated with the construction and operation of the Project would not occur. However, the analysis contained herein concludes that with feasible mitigation all of the potential impacts associated with the Project would be reduced below the level of significance.

The No Project Alternative fails to achieve almost all of the Project objectives identified above related to production of energy, advancement of technology, and enhancement of energy security. Failure to achieve the Project objectives would also mean that the No Project Alternative would not further the important state laws and policies discussed below.

In 2005, the state energy agencies issued Energy Action Plan II (EAP II). EAP II emphasized "[the] need to develop and tap advanced technologies to achieve [the] goals of reliability, affordability and an environmentally sound energy future." The Project capital and operating costs, as well as the associated environmental benefits, were balanced such that the Project could provide baseload low-carbon power and some new technology development. This technology development would not be advanced under the No Project Alternative.

---

[1] This carbon dioxide will be compressed and transported via pipeline to the custody transfer point at the adjacent Elk Hills Field, where it will be injected. The CO_2 EOR process involves the injection and reinjection of carbon dioxide to reduce the viscosity and enhance other properties of the trapped oil, thus allowing it to flow through the reservoir and improve extraction. During the process, the injected carbon dioxide becomes sequestered in a secure geologic formation. This process is referred to herein as CO_2 EOR and Sequestration.

California Assembly Bill 32 (AB 32) requires reduction of greenhouse gas emissions to 1990 levels by 2020. Furthermore, Executive Order S-3-05 sets a state target of reducing greenhouse gas emissions to 80 percent below 1990 levels by 2050. AB 32 requires the California Air Resources Board (CARB) to assign emissions targets to each sector in the California economy and to develop regulatory and market methods to ensure compliance, which take effect in 2012. The California Public Utilities Commission (CPUC) and California Energy Commission (CEC) are to develop specific proposals to CARB for implementing AB 32 in the electricity sector, and possibly including a cap-and-trade program.

The satisfaction of AB 32 and Executive Order S-3-05 will require zero- or low-carbon power generation for facilities that are brought on-line in the next decade. In the absence of new low-carbon technologies policies, the state will miss its greenhouse gases reduction targets by a large margin. The Project's reliable, low-carbon baseload generation will help California meet its greenhouse gases goals. The No Project Alternative does not advance these goals.

Senate Bill 1368 (SB 1368), passed in 2006, established an Emission Performance Standard (EPS) for greenhouse gas emissions from power plants used to serve baseload power in California. One of the requirements of SB 1368 is that utilities may only sign long-term contracts (5 years or more) with power plants that produce no more greenhouse gas emissions than a natural gas combined cycle (NGCC) power plant. Pursuant to SB 1368, the CPUC has set the EPS at 1,100 pounds of carbon dioxide per megawatt hour (MWH) of electricity generated by the power plant. This law effectively prohibits California utilities from owning or contracting long term with coal-fired power plants, in- or out-of-state, unless they are operated with carbon capture and sequestration (CCS). The intended effect of SB 1368 is to encourage baseload low-carbon power production. The Project's greenhouse gas emissions will be well below this threshold requirement.

AB 1925, passed in 2006, requires the CEC to provide a report to the California legislature by November 2007 "with recommendations for how the state can develop parameters to accelerate the adoption of cost-effective geologic carbon sequestration strategies." This type of legislation clearly demonstrates California's commitment to supporting and encouraging in-state CCS demonstration technology. Again, the No Project Alternative would hinder the execution of this legislative mandate.

The use of petroleum coke (petcoke) or a blend of petroleum/coal blend feedstock provides the power plant the greatest operational and commercial flexibility. The Project will add a nominal 250 MW of baseload low-carbon power to the grid, provide environmental benefits in regards to greenhouse gases (among others), and help California meet its obligations under AB 32, SB 1368 and AB 1925. In contrast, the No Project Alternative fails to meet the basic Project Objectives, and therefore fails to advance these goals. As a result, the No Project Alternative was rejected in favor of the proposed Project.

6.3 SITE AND LINEAR FACILITIES LOCATION ALTERNATIVES

In determining whether or not alternative site and linear facilities locations would feasibly attain the Project objectives, the Applicant used the following site evaluation criteria:

- Environmental impacts;
- Safety (proximity to residents, schools, day care centers, etc.);
- Proximity to sensitive receptors (population and sensitive species);
- Environmental justice considerations;
- Economic feasibility;
- Site acreage (300+ acres), topography, lowest elevation (to maximize power generation);
- Proximity to carbon dioxide customer for CO_2 EOR and Sequestration;
- Minimize impacts on transportation corridors;
- Feasibility of land acquisition;
- Proximity to infrastructure to minimize impacts from Site access and linear facilities; and
- Proximity to raw water supply.

6.3.1 Proposed and Alternative Sites

The Project Site (1,101 acres being purchased, of which 473 acres will be utilized for the Project Site) is located in an agricultural area in Kern County, California near the Elk Hills Field. The Project Site is contiguous land bounded by Adohr Road to the north, Tupman Road to the east, an irrigation canal to the south, and the Dairy Road right-of-way to the west. The Project Site is in a sparsely populated area. There are only a few homes within a mile of the Project Site and the unincorporated community of Tupman is 1.5 miles from the site. Primary access will be from Interstate 5, to Stockdale Highway west, to Dairy Road then south to Adohr Road. The topography of the Project Site is flat. The geology at the Project Site has been determined suitable for power plant construction.

The Project Site was selected based upon, among other things, the available land, proximity to a carbon dioxide storage reservoir, and the existing natural gas transportation, electric transmission, and brackish groundwater supply infrastructure that could support the proposed 250 MW of baseload low-carbon power generation. The Project Site was also chosen for its reasonable proximity to Interstate 5, State Routes (SR) 58 and 119, and Stockdale Highway. While SR 119 and SR 58 are not the preferred access routes for the Project, they provide another major personnel ingress/egress route in the event of an emergency. The geology in the vicinity of the Project Site makes it one of the premier locations in the United States for CO_2 EOR and Sequestration.

HEI submitted its initial Application for Certification (AFC) (08-AFC-8) to the CEC on July 30, 2008, which proposed the Project on a different site. HEI subsequently decided to move the Project when it discovered the existence of previously undisclosed sensitive biological resources at the prior site. As a result, the Applicant was required to conduct an alternative site analysis that was not merely theoretical, but was in fact necessary to identify an alternative site for the Project, which has now become the Project Site and is the subject of this Revised AFC. In the process, several alternative sites in the vicinity of the unincorporated communities of Buttonwillow and Tupman were considered. However, the alternative sites were rejected for various reasons, including (1) topography, (2) distance from the proposed carbon dioxide custody transfer point, (3) lengths of linear facilities, (4) sensitive environmental receptors and/or (5) land availability. These sites and the relevant information are presented in Table 6-1, Alternative Sites Reviewed and Status.

Table 6-1
Alternative Sites Reviewed and Status

Property	Status
Project Site	Project Site – Submitted in the AFC
Former Project Site	Eliminated – due primarily to concentration of California threatened species identified (Blunt-Nosed Leopard Lizard)
Alternate 1	Eliminated – Owner not willing to sell
Alternate 2	Eliminated – Sold to another buyer
Alternate 3	Eliminated – Less desirable due to close proximity to Interstate 5.
Alternate 4	Eliminated – due primarily to length of linears and number of private land owners involved

Figure 6-1, Alternative Site, will be submitted under separate confidential cover and will show the locations of the above alternative sites.

Based on the above analysis, no alternative sites were identified that were environmentally superior to the Project Site, and would allow attainment of most of the Project objectives. Thus, the Project Site was selected.

6.3.2 Project Linear Facilities

The Project Site maximizes the use of existing rights-of-way (ROW) for linear facilities while minimizing the number of private land owners involved. The raw water supply pipeline will be located within an existing ROW owned by Buena Vista Water Storage District (BVWSD). The natural gas and potable water pipelines are primarily located within the existing Tupman Road ROW. And finally, both transmission linear alternatives have been sited to limit the number of miles of transmission and number of land owners that will be impacted by the Project. The routing of the linear facilities was thoroughly reviewed to limit the environmental impacts associated with the Project.

6.3.2.1 Electrical Transmission Line

An electrical transmission line will interconnect the Project to Pacific Gas & Electric's (PG&E) Midway Substation. As discussed in Section 4, Electrical Transmission, four transmission routes were assessed as part of the Project. The interconnection voltage is 230 kilovolts (kV) and the new transmission line will be approximately 8 miles long, extending from the western edge of the Project Site to the north, and west to the north side of the substation.

Four initial route alternatives were screened for the transmission line between the Project Site and the substation. Of these four alternatives, two have been fully evaluated as viable alternatives for this Revised AFC. Other transmission features that were evaluated included the following:

- Transmission structure types;
- Conductor sizes and conductor families;

- Circuit bundle configurations;
- Ground wires;
- Insulators; and
- Construction methods.

Section 4.0, Electrical Transmission of this Revised AFC provides the details of these alternatives and their evaluations.

6.3.2.2 Natural Gas Line and Freshwater Line

The natural gas line and potable water line will enter the Project Site from the south, after travelling northwest partly along Tupman Road, and after tying into the existing source lines located near the intersection of Tupman Road and SR 119. Some variations on the proposed route were considered. However, routing options are limited in this area, given the location of the main supply pipeline.

6.4 ALTERNATIVE GENERATING TECHNOLOGIES AND CONFIGURATIONS

HEI was formed to develop a material business consisting of the production of low-carbon hydrogen-rich fuel from solid feedstocks for the generation of low-carbon power with high-level carbon capture and CO_2 EOR and Sequestration. These particular Project objectives drove the generation technology selection. Accordingly, the Integrated Gasification Combined Cycle (IGCC) technology was selected because of its unique ability to produce low-carbon hydrogen-rich fuel for baseload power generation, as well as for its superior carbon-capture features. The technology selection was driven by the following objectives: (1) proving commercial scale IGCC-with carbon-capture operability, and (2) proving associated economic viability. A key aspect is delivering a high reliability operating plant within a minimum period after initial startup. Other generating technologies, such as solar, wind, geothermal, hydroelectric, and nuclear, were not selected because they fundamentally fail to achieve the Project objectives.

6.4.1 General Electric Gasification Technology

IGCC with carbon capture is the only technology which meets the goal of the Project to generate low-carbon power using hydrogen-rich fuel produced from a solid feedstock. Other technologies such as pulverized coal technology and oxyfuel technology do not meet this goal. Furthermore, pulverized coal technology with carbon capture is an unproven technology at the Project's scale, and has lower efficiency, higher water usage, and higher emissions.

General Electric's (GE) gasification technology forms the initial section of the IGCC power plant. Other gasification technology options were considered, including those of Shell and ConocoPhillips. GE's quench gasification process was selected for the following reasons:

- GE has the most experience designing solid fuel gasifiers (GE had more than 10 operating facilities at the time of selection).

- GE gasification has the most IGCC and petrochemical operating hours on U.S. coals and the greatest experience of U.S. coals, petcoke and coal/petcoke blend operations.

- GE historically has the most operating experience with 100 percent petcoke gasifiers (four at the time of selection).
- The quench gasification process is best suited for high levels of carbon dioxide capture because of a simple arrangement whereby the steam required by the shift reaction to produce carbon dioxide is generated by water quench of the synthesis gas (syngas).
- GE quench gasification technology was identified as the best fit for the specific requirements of the proposed Project, when taking into account key decision criteria including the life cycle cost of electricity and reducing technology risk through demonstrated commercial operation with similar (petcoke and coal) feedstocks, at similar capacity and operating conditions.

Based on the above reasons, GE is the selected technology supplier.

6.4.2 Acid Gas Removal System

Two important design criteria for the acid gas removal (AGR) system were: (1) removal of sulfur in the hydrogen-rich fuel to a target of less than 5 ppm by volume (ppmv) total sulfur (a level compatible with state-of-the-art SCR technology); and (2) production of a high-purity carbon dioxide stream that contains over 90 percent of the total carbon in the raw syngas. There are numerous AGR technologies available, but only a few have found wide-spread acceptance for gasification projects. The three most commonly selected technologies are methyldiethanolamine (MDEA), Selexol®, and Rectisol.

For the reasons discussed below, Rectisol was selected because of its ability to meet the Project's target levels for sulfur removal and purity of the carbon dioxide stream. All three of these solvents are capable of selective removal of hydrogen sulfide from a sour syngas stream. However, the sulfur slip (H_2S + COS) in the treated syngas is highest for methyldiethanolamine (MDEA) (an order of magnitude higher than the desired target level). For this reason, MDEA did not meet the requirements of the Project.

Selexol® is commonly selected for IGCC applications where the gasifier pressure is relatively high and where the depth of sulfur removal is sufficient to allow the use of conventional selective catalytic reduction (SCR) catalysts in the heat recovery steam generators (HRSG). There are several Selexol® units in commercial operation treating syngas. However, Selexol® loses its capital cost advantage when either very deep sulfur removal or high-purity carbon dioxide capture is required. As previously stated, both are required. Furthermore, as compared with Rectisol, only one Selexol® plant is understood to be operating at sulfur levels less than 5 ppmv in the hydrogen-rich gas at a scale smaller than that required for the Project. There is sufficiently more of an experience base showing that Rectisol is more likely to achieve the Project's design criteria for sulfur recovery.

Additionally, Rectisol is the more common selection when the syngas is used for chemical manufacturing and when very deep sulfur removal is required. Rectisol solvent is often used in the production of commercial grade methanol; it is low cost and is available from multiple suppliers. Rectisol is commercially proven with 50 Rectisol plants in operation, and with many

power plants demonstrating sulfur removal at, or better than the design criteria for the Project. Another important factor in the selection of Rectisol is its ability to remove trace contaminants, such as carbonyl sulfide (COS), hydrogen cyanide (HCN), ammonia (NH_3), mercaptans, mercury (Hg), iron (Fe) and nickel (Ni) carbonyls; and mixtures of benzene, toluene, and xylene (BTX).

As a result of the extensive evaluation performed by HEI, it chose Rectisol for the Acid Gas Removal (AGR) system. With its significant sulfur removal capability, proven operating experience demonstrating sulfur removal consistent with the Project's design criteria, and removal of trace contaminants, Rectisol was deemed superior to Selexol® for the Project.

6.4.3 General Electric 7FB Combustion Turbine

GE's 7FB was selected as the combustion turbine for the following reasons. The F class offers higher efficiency (>4 percent) than the E class, and GE has demonstrated more than 100,000 hours on F class turbines in syngas service at the SG-Solutions Wabash IGCC and the TECO Polk IGCC power plants. GE originally developed the 7FB combustion turbine for natural gas-fired combined cycle applications. The first commercial unit started operating in 2002. There are now eight operating 7FB (60 Hertz [Hz]) units in the United States with a total of greater than 20,000 hours of operational history. There also are four operating comparable 9FB (50 Hz) units in Europe with a total of greater than 15,000 hours of operational history. As the 7FB unit is being adapted for different fuel service, rather than undergoing a fundamental redesign and resizing, scale-up is not a concern. GE will provide a full commercial offering for the 7FB turbines that includes performance guarantees on both hydrogen and natural gas.

6.4.4 Conclusion

In conclusion, a thorough review of alternative generation technologies and configurations was conducted. Based on this review, none of the alternatives satisfied the basic Project Objectives, as described above, without resulting in increased adverse impacts to the environment or impaired project feasibility as compared to the proposed Project. As a result, the alternative generation technologies and configurations were rejected in favor of the proposed Project's generation technology.

6.5 ALTERNATIVE WATER SUPPLIES

Several potential alternative water supplies were studied for the Project, as well as potential technologies for reducing water demand.

The water supply options considered included:

- Ocean Water
- Brackish Water
  - Industrial Wastewater
  - Semitropic Water Storage District
  - Buena Vista Water Storage District
- Inland Wastewaters

- Municipal Effluent
- Agricultural Wastewater

- Other Inland Waters
  - State Water Project;
  - Fresh Groundwater
  - Municipal Water Supply

In addition to evaluating the ability of the alternatives to feasibly attain the general Project objectives, the Applicant used the following water supply specific criteria as a means of evaluating potential water supply alternatives:

- Environmental impacts
- Beneficial impact to local groundwater quality and agriculture
- Economic feasibility
- Feasibility of land acquisition
- Proximity to raw water supply
- Minimization of the parasitic electrical demand.

In addition, the analysis took into consideration California State Water Resources Control Board Resolution No. 75-58[2], referred to as the California Water Policy, which addresses the use and disposal of inland waters used for power plant cooling.

6.5.1 Water Supply Alternatives Decision Analysis

The following hierarchy of "tests" was applied to each water supply alternative:

Test 1 – Is the alternative water supply feasibly available at the Project Site? (If not, then disregard this alternative. If yes, proceed to Test 2.)

Test 2 – Will the subject water supply alternative satisfy California Water Policy? (If not, then disregard this alternative. If yes, proceed to Test 3.)

Test 3 – Is the subject water supply alternative technologically sufficient (quantity and quality) to guarantee high safety and reliability (98 percent availability?) (If no, then disregard this alternative. If yes, proceed to Test 4.)

For water supply alternatives passing Tests 1 through 3, apply Tests 4 through 6:

Test 4 – Rate other impacts associated with each water supply alternative, including transportation, biological, energy, health and safety, etc., (high, medium, and low).

Test 5 – Rate relative capital costs of each remaining water supply alternative (high, medium, and low).

[2] Water Quality Control Policy on the Use and Disposal of Inland Waters Used for Power Plant Cooling, Resolution 75-58, State Water Resources Control Board, June 19, 1975.

Test 6 – Rate relative operation and maintenance (O&M) costs of each of the remaining water supply alternatives (high, medium, and low).

Tests 1 through 3 address "fatal flaw" criteria. Alternatives that did not pass Test 1, 2, or 3, were not evaluated further. For alternatives passing Tests 1 through 3, the evaluations from application of Tests 4 through 6 were evaluated for each water supply alternative, with the alternative with the highest evaluation being selected.

6.5.2 Wastewater Being Discharged to the Ocean

The Project Site is located approximately 75 miles from a significant source of ocean disposed wastewater. While this supply is large and technology for its successful use proven, the capital cost for transporting, and treating the wastewater from this option is high (>$500 million). This alternative water supply failed Test 1 as it is not feasibly available at the Project Site. This alternative was eliminated from further consideration.

6.5.3 Ocean Water

The Project Site is located approximately 75 miles from the Pacific Ocean. While this supply is limitless and technology for its successful use proven, the capital cost for transporting, treating, and disposing of this option is high (>$500 million). This alternative water supply failed Test 1 as it is not feasibly available at the Project Site. This alternative was eliminated from further consideration.

6.5.4 Brackish Water

6.5.4.1 Industrial Wastewater

Industrial wastewater in the form of produced water is available from the oilfields within 10 miles of the Project Site. Produced water refers to water that is "co-produced" from the many oil wells in the Kern County region. Produced water is an industrial wastewater that is separated from crude oil in the oil production process. Kern County oil well output is often 8 parts water to 1 part oil, leading to a large excess of produced water which the local oil producers must dispose of. The produced water is currently disposed by re-injection and discharge to evaporation ponds. There is approximately 15 million gallons per day (mgd) of produced water available when drawn from multiple locations within a radius of 10 miles of the Project Site. Producers of these waters indicated they were willing to provide this water to the Project. However, they are reluctant to guarantee specific quantities of future water supply. The business purpose of these organizations is oil production, and not water production and they are unwilling to complicate the former for the sake of the latter. Commercial discussions determined that a reliable produced water supply is not readily available and therefore this alternative failed Test 1. Under the test hierarchy, previously described, this conclusion ends consideration of this alternative. Nevertheless, for the purposes of this analysis, the ability of this alternative to meet subsequent tests was evaluated.

As inland wastewaters are identified in California State Water Resources Control Board Resolution No. 75-58 as a preferred alternative source of water supply, the produced water is consistent with the California Water Policy. Therefore, this supply does pass Test 2.

The produced water exhibits Total Dissolved Solids (TDS) concentrations ranging from 10,000 to 40,000 mg/L, and have elevated concentrations of potentially problematic ionic species including silicon (Si), strontium (Sr), and barium (Ba), as well as possessing significant oil and grease issues. Given the quality and ionic constituents of these supplies, the optimal technology for processing this raw water to Project standards is a "thermal process." The thermal process uses a mechanical vacuum pump and heat input to boil the water and recover a good quality stream sufficient for utility purposes. This utility water stream must then be treated further with reverse osmosis (RO) and demineralization to achieve the Project demineralized water standard. Produced water will require significant treatment prior to use. This treatment is not unprecedented, but only one such example is known to HEI. This provides a higher level of technology risk than the Project is comfortable with. However, such treatment does appear to be technologically feasible so this supply passed Test 3.

It is estimated that the capital cost to construct a water plant to process this raw water supply could be $200 million. The costs to operate this water plant are anticipated to be high and could result in a nearly 15 MW additional parasitic load over use of brackish groundwater (due to the steam diversion from the STG cycle to operate the water plant). These capital and operating costs are substantial and they negatively impact the Project's economics.

The thermal treatment technology will produce a concentrated brine waste stream. Based upon quality data already obtained, it is possible that this reject stream will have constituents at sufficient levels to trigger classification of the brine waste stream as hazardous waste. This waste generation would conflict with the intent of the Project design to minimize the production of hazardous waste to the extent feasible.

While oilfield produced water appears to be technologically possible as a water supply to the Project, it is not the preferred option due to availability, environmental, waste disposal and cost considerations.

6.5.4.2 Semitropic Water Storage District

The Semitropic Water Storage District (Semitropic) is located in northwest Kern County. It has a groundwater storage capacity of 1.65 million acre-feet and there is 650,000 acre-feet of capacity remaining.

Agriculture in a portion of the Semitropic District is impacted by shallow, brackish groundwater conditions resulting from agricultural irrigation. This impacted area is located approximately 10 miles to the west/northwest of Wasco and affects an area of roughly 10 square miles.

Similar to the BVWSD, use of this water supply alternative is consistent with the California Water Policy in that the ultimate water supply will be brackish groundwater and passed Test 2. However, in conversations with Semitropic, they were unable to verify the water supply quantity

and composition and were therefore unable to provide a firm water supply commitment for this Project. Therefore, Tests 1 and 3 could not be performed and this alternative was rejected.

6.5.4.3 Buena Vista Water Storage District

The Project Site is located within the southern portion of the BVWSD. Areas in BVWSD are impacted by brackish groundwater conditions. The BVWSD has proposed to supply the Project with brackish groundwater from a system of wells that will be designed to manage groundwater quality in a portion of the district, and has provided documentation indicating their interest (see Appendix O2, Groundwater Model Documentation). Redundant wells will be installed to provide emergency backup protection in case of primary wells failing. The brackish groundwater to be provided is not otherwise used for beneficial purposes.

The District has stated that it will be able to provide brackish groundwater to the Project for the estimated life of the Project (see will-serve letter in Appendix O1, Water Resources Information). As there is sufficient brackish groundwater available to meet the needs of the Project, this alternative passed Test 1. The use of brackish groundwater is consistent with the California Water Policy and passed Test 2.

The District's brackish water supply system will include a "picket fence" of wells to intercept the brackish water plume entering the District from the west. As it is technologically feasible to obtain and treat the brackish groundwater to Project standards, this alternative passed Test 3.

As discussed in Section 5.14 (Water Resources) of this Revised AFC, this alternative does not result in any significant adverse environmental impacts. The relative capital costs and O&M costs associated with this water supply alternative are not insignificant. However, this option is economically feasible. Based on this evaluation, brackish water provided by BVWSD has been identified as the preferred process water supply for the Project.

6.5.5 Inland Wastewaters

6.5.5.1 Municipal Effluent

The Project Site is located approximately 17 miles northeast of the city of Bakersfield Wastewater Treatment Plant #3. This plant treats a large portion of the municipal effluent generated from the city of Bakersfield.

HEI had discussions with the city regarding their interest and availability in supplying water to the Project. Currently, the city is selling its treated effluent to local farmers for irrigation purposes. They do not have excess capacity outside of existing contracts which can supply the Project with its total water needs. They do have some excess production (approximately 1 mgd), which is expected to increase in the intervening time between Project permit submission and startup. This growth rate is estimated at approximately 0.25 mgd per year, resulting in another 1 mgd available by startup in 2014. This amount is insufficient for project needs and would have to be augmented by an additional water supply.

Given that this supply is insufficient for Project needs it failed Test 1, and was not selected as the preferred process water supply for the Project.

6.5.5.2 Agricultural Wastewater

Agricultural wastewater (i.e., tile drainage) is excess water from irrigation practices. This wastewater is not available in sufficient quantities in the vicinity of the Project Site, nor is it sufficiently reliable for use at the Project due to water quality variability. Therefore, this alternative failed Tests 1 and 3 and was eliminated from further consideration.

6.5.6 Other Inland Waters

6.5.6.1 State Water Project

The State Water Project's California Aqueduct is located approximately 1,900 feet south of the Project Site. This source failed Test 1 as the Project does not have an allocation for the use of water from the State Water Project. In addition, it is anticipated that this source would fail to pass Test 2 since the availability of other viable sources of water would make use of this freshwater source inconsistent with the California Water Policy (State Water Resources Control Board Resolution No. 75-58). Direct use of water from the State Water Project was therefore eliminated from further consideration.

6.5.6.2 Fresh Groundwater

Fresh groundwater is found in the vicinity of the Project Site. As this alternative water supply is feasibly available to the Project, it passed Test 1. Given the availability of other viable sources of water, use of this freshwater supply would be inconsistent with the California Water Policy, and this alternative water supply failed Test 2. It was, therefore, eliminated from further consideration.

6.5.6.3 Municipal Water Supply

Given the availability of other viable sources of water, use of a municipal freshwater supply would be inconsistent with the California Water Policy. This alternative water supply failed Test 2 and was eliminated from further consideration.

6.6 WATER USAGE MINIMIZATION STUDY

Air cooling of the steam turbine exhaust has been evaluated by HEI to determine suitability of air cooling for Project heat rejection. The resultant study of this option is included in Appendix X, Water Usage Minimization Study. Air cooling of the STG was not selected because it results in a substantial increase in parasitic electrical demand, an increase in capital costs, and a dramatic decrease in STG output. All of these effects result in a markedly negative impact on cost and availability of electricity. The results for air cooling the STG cycle decrease power plant output by greater than 25 MW on hot days. Based on the negative commercial impact of lost production, air cooling was not included for the Project.

The results from application of Tests 4 through 6 are summarized in Table 6-2, Evaluation of Water Supply Options.

Table 6-2
Evaluation of Water Supply Options

Supply Option	Test #1 Availability (pass?)	Test # 2 Satisfy LORS? (pass?)	Test #3 Technologically Feasible? (pass?)	Test #4 Environ -mental Impacts	Test #5 Relative Capital Costs	Test #6 Relative O&M Costs
Wastewater discharged to ocean	No	N/A	N/A	N/A	N/A	N/A
Ocean	No	N/A	N/A	N/A	N/A	N/A
Brackish water						
Industrial wastewater	No	Yes	Yes	Medium	High	High
Semitropic	No	Yes	ND	Low	Medium	Medium
BVWSD	Yes	Yes	Yes	Low	Medium	Medium
Municipal Effluent	No	Yes	Yes	Low	Medium	Medium
Agricultural wastewater	No	N/A	N/A	N/A	N/A	N/A
State Water Project	Yes	No	N/A	N/A	N/A	N/A
Fresh groundwater	Yes	No	N/A	N/A	N/A	N/A
Municipal supply	No	N/A	N/A	N/A	N/A	N/A

Source: HECA Project

Notes:
BVWSD = Buena Vista Water Storage District
HECA = Hydrogen Energy California
LORS = laws, ordinances, regulations, and standards
ND = Not determined at this time
N/A = not applicable as alternative failed fatal flaw test
O&M = operations and maintenance

In conclusion, a thorough review of alternative water supplies was conducted. The preferred water supply for the Project is brackish groundwater from the Buena Vista Water Storage District (BVWSD).

6.7 ALTERNATIVE WASTEWATER DISPOSAL OPTIONS

Following is a summary of the wastewater disposal alternatives that were evaluated:

- Zero Liquid Discharge (ZLD) system – A mechanical system using evaporation and crystallization to effectively reduce liquid wastes to a dry waste for landfill disposal.
- Evaporation pond – Large, lined surface impoundment for disposal of wastewater via atmospheric drying, resulting in a sludge that must be disposed of in a landfill system.

- Class I non-hazardous injection well – Disposal of wastewater via well discharge to a geologic formation that is unsuitable for potable water production and isolated from drinking water aquifers.
- Disposal to wastewater treatment plant – Discharge to a treatment works for removal of pollutants.
- Surface discharge – Discharge of wastewater to the ground or receiving waters, including lakes, rivers, and streams.
- Off-site treatment – Routing of the wastewater to a facility in another location employing one or more of several technologies by a contracted service company.

6.7.1 Wastewater Disposal Alternatives Decision Analysis

The following hierarchy of "tests" was applied to each alternative:

Test 1 – Is the wastewater disposal alternative feasibly available at the Project? (If not, then disregard this alternative. If yes, proceed to Test 2.)

Test 2 – Will the subject alternative satisfy applicable LORS? (If not, then disregard this alternative. If yes, proceed to Test 3.)

Test 3 – Is the subject alternative technologically sufficient to guarantee high safety and reliability (98 percent availability? If no, then disregard this alternative. If yes, proceed to Tests 4 through 6.)

Tests 1 through 3 address "fatal flaw" criteria. Alternatives that did not pass Test 1, 2, or 3, were not evaluated further. For alternatives passing Tests 1 through 3, Tests 4 through 6 were applied and scored as high, medium, or low:

Test 4 – Rate other environmental impacts, including transportation, biological, energy, health and safety, etc.

Test 5 – Rate relative capital costs of each remaining alternative.

Test 6 – Rate relative O&M costs of each remaining alternative.

The ratings from application of Tests 4 through 6 were evaluated for each alternative, with the highest rated alternative selected.

6.7.2 ZLD System

A ZLD system is a mechanical system using a mechanical vapor compression evaporator and crystallization to effectively reduce liquid wastes to a dry solid waste for landfill disposal. ZLD enables water to be reused within the plant and it eliminates wastewater. Although this option is technologically feasible, it is energy, operational, and capital intensive.

6.7.3 Evaporation Pond

An evaporation pond would consist of a large, lined surface impoundment for disposal of wastewater via atmospheric drying, resulting in a sludge that must be disposed in an approved landfill. A very large evaporation pond would be required for disposal of the large volume of wastewater produced by the Project. Due to space, economic, and environmental considerations, this alternative was determined to not be feasible. Therefore, this alternative was eliminated from further consideration.

6.7.4 Injection Disposal Well

This alternative includes the disposal of wastewater via wells that discharge to a geologic formation that is unsuitable for potable water production and is isolated from aquifers. The following geologic conditions protective of underground source of drinking water are required to obtain a permit to construct a Class I Non-hazardous Injection Well:

- A thick sequence of permeable sediments capable of accepting the injected wastewater.
- A thick sequence of impermeable sediments that will confine the injected wastewater and prevent migration towards underground source(s) drinking water.
- The injection operation should not facilitate the fracturing of the rocks or the integrity of the injection well.

Deep well injection (DWI) is used widely on the west side of Kern County. Local subsurface strata are well understood and large amounts of geologic data are available to define the appropriate wastewater disposal system. DWI for the rates expected would require a network of approximately 15 disposal wells (with five additional wells for redundancy), with multiple high head booster pumps to enable injection. This infrastructure would be expensive to build and operate. Constructing this infrastructure either on site or off site would involve significant commercial negotiations. Because lengthy commercial discussions may disrupt the Project timeline, and considering that the ZLD was available at similar cost with no negative schedule impact, this DWI option was not selected.

6.7.5 Disposal to Wastewater Treatment Plant

The city of Bakersfield wastewater treatment plant is located approximately 17 miles southeast of the Project Site. This alternative failed to pass Test 1 due to the distance and insufficient capacity at the wastewater treatment plant.

6.7.6 Surface Discharge

This alternative would involve the discharge of wastewater to the ground or receiving waters including lakes, rivers, and streams. This method failed to pass Test 2 as the quality of the wastewater will not meet state and federal discharge limitations for direct discharge to surface waters. This alternative was eliminated from further consideration.

6.7.7 Off-Site Treatment

This alternative would involve the transport of the wastewater produced by the Project to an off-site facility for treatment and/or disposal. This wastewater disposal alternative failed to pass Test 1 as it is not feasibly available at the Project Site due to the volume of wastewater produced and the absence of a treatment or disposal facility in the vicinity.

The evaluations from application of Tests 4 through 6 were totaled for each alternative, with the alternative with the highest evaluation selected. Wastewater disposal options are evaluated in Table 6-3, Evaluation of Wastewater Disposal Options.

Table 6-3
Evaluation of Wastewater Disposal Options

Wastewater Option	Test #1 Availability (pass?)	Test # 2 Satisfy LORS? (pass?)	Test #3 Technologically Feasible? (pass?)	Test #4 Environmental Impacts	Test #5 Relative Capital Costs	Test #6 Relative O&M Costs
ZLD	Yes	Yes	Yes	Low	High	High
Evaporation pond	No	N/A	N/A	N/A	N/A	N/A
Deep injection well	Yes	Yes	Yes	Low	High	High
WWTP	No	N/A	N/A	N/A	N/A	N/A
Surface discharge	No	N/A	N/A	N/A	N/A	N/A
Off-site treatment facility	No	N/A	N/A	N/A	N/A	N/A

Source: HECA Project

Notes:
LORS = laws, ordinances, regulations, and standards
N/A = not applicable as alternative failed fatal flaw test
O&M = operation and maintenance
WWTP = wastewater treatment plant
ZLD = zero liquid discharge

Lifecycle costs for ZLD are roughly similar to a DWI system. However, ZLD is more straightforward from a commercial perspective in comparison to DWI. On the basis of similar costs, and ease of commercial arrangements, the proposed project includes a ZLD system for disposal of water treatment wastes and cooling tower blowdown.

6.8 REFERENCES

California Energy Commission, 2007. *2007 Integrated Energy Policy Report.* Report Number CEC-100-2007-008-CMF-ES

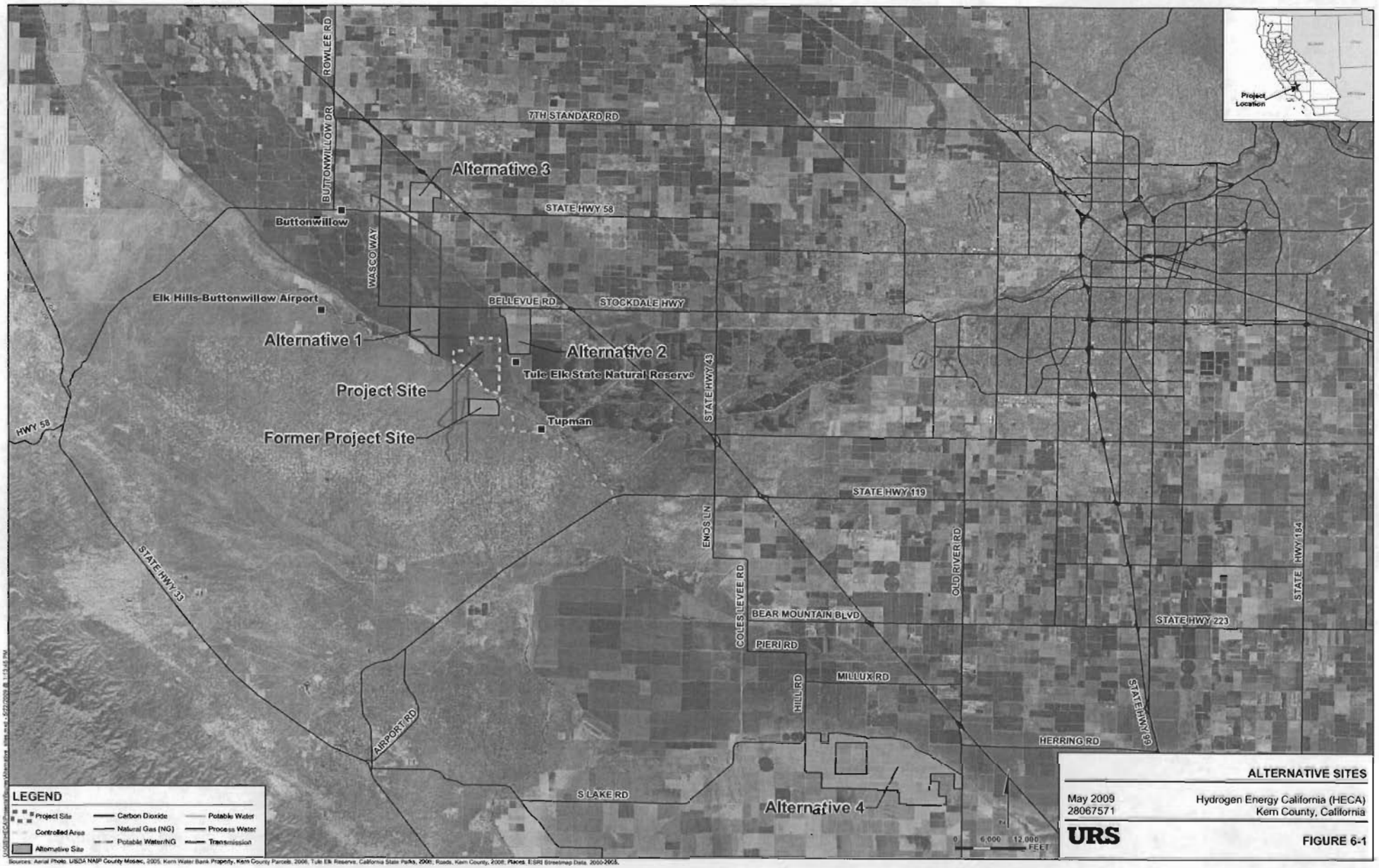

Sources: Aerial Photo: USDA NAIP County Mosaic, 2005; Kern Water Bank Property, Kern County Parcels, 2008; Tule Elk Reserve, California State Parks, 2008; Roads, Kern County, 2008; Places: ESRI Streetmap Data, 2000-2005.

ALTERNATIVE SITES

May 2009
28067571

Hydrogen Energy California (HECA)
Kern County, California

URS

FIGURE 6-1

Adequacy Issue: Adequate ____ Inadequate ____

DATA ADEQUACY WORKSHEET

Revision No. 0 Date ____

Technical Area: **Alternatives**

Project: ____

Technical Staff: ____

Project Manager: ____

Docket: ____

Technical Senior: ____

SITING REGULATIONS	INFORMATION	AFC PAGE NUMBER AND SECTION NUMBER	ADEQUATE YES OR NO	INFORMATION REQUIRED TO MAKE AFC CONFORM WITH REGULATIONS
Appendix B (b) (1) (D)	A description of how the site and related facilities were selected and the consideration given to engineering constraints, site geology, environmental impacts, water, waste and fuel constraints, electric transmission constraints, and any other factors considered by the applicant.	Section 6.3, p. 6-3 Section 6.5, p 6-8		
Appendix B (f) (1)	A discussion of the range of reasonable alternatives to the project, or to the location of the project, including the no project alternative, which would feasibly attain most of the basic objectives of the project but would avoid or substantially lessen any of the significant effects of the project, and an evaluation of the comparative merits of the alternatives. In accordance with Public Resources Code section 25540.6(b), a discussion of the applicant's site selection criteria, any alternative sites considered for the project, and the reasons why the applicant chose the proposed site.	Section 6.2, p. 6-2 Section 6.3, p. 6-3 Section 6.5, p. 6-8		
Appendix B (f) (2)	An evaluation of the comparative engineering, economic, and environmental merits of the alternatives discussed in subsection (f)(1).	Section 6.2, p. 6-2 Section 6.3, p. 6-3 Section 6.5, p. 6-8		

APPENDIX H
Health Risk Assessment and Ambient Air Quality Analysis

San Joaquin Valley Air Pollution Control District
Risk Management Review

To:	Homero Ramirez– Permit Services
From:	Leland Villalvazo– Technical Services
Date:	May 22, 2010
Facility Name:	HECA LLC
Location:	Sec 10, Twn30S, Rng 24E
Application #(s):	S-7616-10 thru 16-0
Project #:	S-1093741

RECEIVED
JUN - 1 2010
SJVAPCD
Southern Region

A. RMR SUMMARY

RMR Summary				
Categories	**Unit 1-0 thru 8-0 and 10-0 thru 16-0**	**Unit 9-0**	**Project Totals**	**Facility Totals**
Prioritization Score	NA		NA	NA
Acute Hazard Index	0.036		0.036	0.036
Chronic Hazard Index	0.04		0.04	0.04
Maximum Individual Cancer Risk (10^{-6})	1.27	2.08	3.35	3.35
T-BACT Required?	**No**	**Yes**		
Special Permit Conditions?	**See below**	**No**		

Proposed Permit Conditions

To ensure that human health risks will not exceed District allowable levels; the following permit conditions must be included for:

Unit # 1-0 thru 13-0

No special conditions are required.

Unit # 14-0, 15-0

1. Modified {1901} The PM10 emissions rate shall not exceed **0.07** g/hp-hr based on US EPA certification using ISO 8178 test procedure. [District Rule 2201]
2. {1902} The sulfur content of the diesel fuel used shall not exceed 0.05% by weight. [District Rule 2201] N
3. {1898} The exhaust stack shall vent vertically upward. The vertical exhaust flow shall not be impeded by a rain cap, roof overhang, or any other obstruction. [District Rule 4102] N
4. {1344} The engine shall be operated only for maintenance, testing, and required regulatory purposes, and during emergency situations. Operation of the engine for

maintenance, testing, and required regulatory purposes shall not exceed **100** hours per year. [District NSR Rule and District Rule 4701] N

Unit # 16-0

4. Modified {1901} The PM10 emissions rate shall not exceed **0.01** g/hp-hr based on US EPA certification using ISO 8178 test procedure. [District Rule 2201]
5. {1902} The sulfur content of the diesel fuel used shall not exceed 0.05% by weight. [District Rule 2201] N
6. {1898} The exhaust stack shall vent vertically upward. The vertical exhaust flow shall not be impeded by a rain cap, roof overhang, or any other obstruction. [District Rule 4102] N

{1344} The engine shall be operated only for maintenance, testing, and required regulatory purposes, and during emergency situations. Operation of the engine for maintenance, testing, and required regulatory purposes shall not exceed **100** hours per year. [District NSR Rule and District Rule 4701] N

B. RMR REPORT

I. Project Description

Technical Services received a request in March, to perform an Ambient Air Quality Analysis and a Risk Management Review for the construction and operation of a new hydrogen to energy facility.

II. Analysis

Emissions calculated using emission factors provided by the applicant, reviewed by the District, and were input into the HEARTs database. The AERMOD model was used, with the parameters outlined in Appendix A and meteorological data from Bakersfield, Ca to determine the dispersion factors (i.e., the predicted concentration or X divided by the normalized source strength or Q) for a receptor grid. These dispersion factors were input into the Hot Spots Analysis and Reporting Program (HARP) risk assessment module to calculate the chronic and acute hazard indices and the carcinogenic risk for the project.

Technical Services also performed modeling for criteria pollutants CO, NOx, SOx and PM_{10}. The engineer supplied the maximum fuel rate for the IC engine used during the analysis.

The results from the Criteria Pollutant Modeling are as follows:

Criteria Pollutant Modeling Results*

Diesel ICE	1 Hour	3 Hours	8 Hours.	24 Hours	Annual
CO	Pass	X	Pass	X	X
NO_x	Pass[2]	X	X	X	Pass
SO_x	Pass	Pass	X	Pass	Pass
PM_{10}	X	X	X	Pass[1]	Pass[1]

*Results were taken from the attached PSD spreadsheet.
[1]The criteria pollutants are below EPA's level of significance as found in 40 CFR Part 51.165 (b)(2).
[2]The NO_2 emissions have bee evaluated under the federal 1-hour standard of 100ppb or 188.68 ug/m^3.

III. Conclusion

The acute and chronic indices are below 1.0 and the cancer risk associated with the wire drawing machine is greater than 1.0 in a million, but less than 10 in a million. **In accordance with the District's Risk Management Policy, the project is approved with Toxic Best Available Control Technology (T-BACT).**

To ensure that human health risks will not exceed District allowable levels; the permit conditions listed on page 1 of this report must be included for this proposed unit.

These conclusions are based on the data provided by the applicant and the project engineer. Therefore, this analysis is valid only as long as the proposed data and parameters do not change.

The emissions from the proposed equipment will not cause or contribute significantly to a violation of the State and National AAQS.

Attachments:

A. RMR request from the project engineer
B. Additional information from the applicant/project engineer
C. Toxic emissions summary
D. Prioritization score
E. Appendix A – Source parameters

Point Sources

Source Type	Source ID	X Coordinate [m]	Y Coordinate [m]	Base Elevation (Optional)	Release Height [m]	Emission Rate [g/s]	Gas Exit Temp. [K]	Gas Exit Velocity. [m/s]	Stack Inside Diameter [m]
POINT	ASUCOOL1	282891.25	3912002.08	87.00	16.76	1.00000	300.00	7.98	9.14
	ASUCOOL2	282906.16	3912002.41	87.00	16.76	1.00000	300.00	7.98	9.14
	ASUCOOL3	282922.20	3912002.09	87.00	16.76	1.00000	300.00	7.98	9.14
	ASUCOOL4	282937.30	3912001.38	87.00	16.76	1.00000	300.00	7.98	9.14
	PWCOOL1	283042.04	3911998.42	87.00	16.76	1.00000	300.00	7.98	9.14
	PWCOOL2	283056.49	3911998.27	87.00	16.76	1.00000	300.00	7.98	9.14
	PWCOOL3	283071.80	3911998.36	87.00	16.76	1.00000	300.00	7.98	9.14
	PWCOOL4	283087.94	3911997.83	87.00	16.76	1.00000	300.00	7.98	9.14
	PWCOOL5	283103.12	3911997.74	87.00	16.76	1.00000	300.00	7.98	9.14
	PWCOOL6	283118.93	3911997.83	87.00	16.76	1.00000	300.00	7.98	9.14
	PWCOOL7	283133.71	3911997.17	87.00	16.76	1.00000	300.00	7.98	9.14
	PWCOOL8	283148.82	3911997.13	87.00	16.76	1.00000	300.00	7.98	9.14
	PWCOOL9	283164.55	3911997.25	87.00	16.76	1.00000	300.00	7.98	9.14

POINT	PWCOOL10	283180.70	3911998.75	87.00	16.76	1.00000	300.00	7.98	9.14
	PWCOOL11	283195.62	3911999.16	87.00	16.76	1.00000	300.00	7.98	9.14
	PWCOOL12	283211.41	3911998.61	87.00	16.76	1.00000	300.00	7.98	9.14
	PWCOOL13	283287.06	3911997.69	87.00	16.76	1.00000	300.00	7.98	9.14
	GASCOOL1	283226.52	3911998.98	87.00	16.76	1.00000	300.00	7.98	9.14
	GASCOOL2	283240.54	3911997.93	87.00	16.76	1.00000	300.00	7.98	9.14
	GASCOOL3	283256.61	3911998.41	87.00	16.76	1.00000	300.00	7.98	9.14
	GASCOOL4	283271.05	3911997.67	87.00	16.76	1.00000	300.00	7.98	9.14
	EMERGEN1	282948.29	3912171.97	87.00	6.10	1.00000	677.59	67.38	0.37
	HRSGSTK	282946.68	3912206.70	87.00	65.00	1.00000	344.26	11.55	6.10
	FIREPUMP	282758.93	3912535.07	86.99	6.10	1.00000	727.59	47.52	0.21
	AUX_BOIL	282961.44	3912269.15	87.00	24.38	1.00000	422.04	9.20	1.37
	TAIL_TO	283056.59	3912109.73	87.00	50.29	1.00000	922.04	7.45	0.76
	SRUFLARE	283051.07	3912092.42	87.00	76.20	1.00000	1,273.00	20.00	1.09
	GF_FLARE	283070.02	3912465.88	87.00	76.20	1.00000	1,273.00	20.00	5.47

POINT	GASVENTB	283211.75	3912316.58	87.00	64.01	1.00000	338.71	26.39	0.30
	DC1	283360.95	3913049.72	87.00	13.87	1.00000	300.00	15.06	0.51
	DC2	283359.63	3912745.57	87.00	51.97	1.00000	300.00	14.90	0.81
	DC3	283160.13	3912309.58	87.00	53.79	1.00000	300.00	14.66	0.56
	DC4	283303.19	3912743.49	87.00	51.97	1.00000	300.00	15.70	0.43
	DC5	283159.74	3912743.29	87.00	24.23	1.00000	300.00	15.06	0.43
	DC6	283159.71	3912323.90	87.00	53.79	1.00000	300.00	14.19	0.23
	RC_FLARE	283070.23	3912472.35	87.00	76.20	1.00000	1,273.00	20.00	0.10
	CO2VENT	283051.20	3912386.70	87.00	79.25	1.00000	0.00	49.89	1.07
	15	282948.02	3912162.76	87.00	6.10	1.00000	677.59	67.38	0.37

Volume Sources

Source Type	Source ID	X Coordinate [m]	Y Coordinate [m]	Base Elevation (Optional)	Release Height [m]	Emission Rate [g/s]	Length of Side [m]	Building Height [m]	Initial Lateral Dim. [m]	Initial Vertical Dim. [m]
VOLUME	PWR1	282912.88	3912205.88	87.00	2.00	1.00000	14.76	Surface-Based	3.43	1.86
	PWR2	282912.88	3912188.35	87.00	2.00	1.00000	14.76	Surface-Based	3.43	1.86
	SRU1	283030.23	3912223.94	87.00	2.00	1.00000	18.31	Surface-Based	4.26	1.86
	SRU2	283029.80	3912204.10	87.00	2.00	1.00000	18.31	Surface-Based	4.26	1.86
	SRU3	283029.56	3912184.64	87.00	2.00	1.00000	18.31	Surface-Based	4.26	1.86
	SWS1	283028.93	3912164.73	87.00	2.00	1.00000	18.31	Surface-Based	4.26	1.86
	SWS2	283028.93	3912146.01	87.00	2.00	1.00000	18.31	Surface-Based	4.26	1.86
	SWS3	283029.56	3912126.02	87.00	2.00	1.00000	18.31	Surface-Based	4.26	1.86
	TGTU1	283066.00	3912220.34	87.00	2.00	1.00000	34.38	Surface-Based	8.00	1.86
	TGTU2	283065.82	3912184.55	87.00	2.00	1.00000	34.38	Surface-Based	8.00	1.86
	TGTU3	283065.82	3912146.23	87.00	2.00	1.00000	34.38	Surface-Based	8.00	1.86
	GASFC1	283227.04	3912405.18	87.00	2.00	1.00000	30.96	Surface-Based	7.20	1.86
	GASFC2	283227.56	3912372.57	87.00	2.00	1.00000	30.96	Surface-Based	7.20	1.86

VOLUME	GASFC3	283227.04	3912338.92	87.00	2.00	1.00000	30.96	Surface-Based	7.20	1.86
	GASFC4	283227.56	3912307.35	87.00	2.00	1.00000	30.96	Surface-Based	7.20	1.86
	GASFC5	283228.08	3912277.86	87.00	2.00	1.00000	30.96	Surface-Based	7.20	1.86
	SHIFT1	283224.48	3912224.67	87.00	2.00	1.00000	44.20	Surface-Based	10.28	1.86
	SHIFT2	283223.96	3912179.73	87.00	2.00	1.00000	44.20	Surface-Based	10.28	1.86
	AGR1	283143.53	3912203.57	87.00	2.00	1.00000	22.00	Surface-Based	5.12	1.86
	AGR2	283142.55	3912178.67	87.00	2.00	1.00000	22.00	Surface-Based	5.12	1.86
	AGR3	283142.74	3912155.53	87.00	2.00	1.00000	22.00	Surface-Based	5.12	1.86

Area Sources

No Area Sources Specified

Open Pit Sources

No Open Pit Sources Specified

Circular Area Sources

No Circular Area Sources Specified

Polygon Area Sources

No Polygon Area Sources Specified

Flare Sources

No Flare Sources Specified

Line Sources

No Line Sources Specified

FILE: E:\District\S7616\HARP\Rep_PMI.txt

RECEPTORS WITH HIGHEST CANCER RISK

REC	TYPE	CANCER	CHRONIC	ACUTE	UTME	UTMN	ZONE
22	GRID	3.35E-06	3.57E-02	6.86E-01	283964	3911825	11
23	GRID	1.15E-06	1.25E-02	2.85E-01	283930	3910451	11
24	GRID	1.13E-06	1.22E-02	2.69E-01	283926	3910435	11
25	GRID	1.13E-06	1.21E-02	2.67E-01	283923	3910435	11
26	GRID	1.07E-06	1.20E-02	2.11E-01	283831	3910473	11
27	GRID	1.04E-06	1.20E-02	2.16E-01	283808	3910483	11
28	GRID	1.03E-06	1.20E-02	2.19E-01	283801	3910484	11
31	GRID	9.95E-07	1.32E-02	3.30E-01	283616	3910539	11
30	GRID	9.86E-07	1.32E-02	3.32E-01	283625	3910535	11
29	GRID	9.73E-07	1.32E-02	3.33E-01	283639	3910533	11

RECEPTORS WITH HIGHEST CHRONIC HI

REC	TYPE	CANCER	CHRONIC	ACUTE	UTME	UTMN	ZONE
22	GRID	3.35E-06	3.57E-02	6.86E-01	283964	3911825	11
60	GRID	7.39E-07	2.46E-02	8.98E-01	282672	3911635	11
59	GRID	7.23E-07	2.40E-02	8.93E-01	282664	3911618	11
62	GRID	6.05E-07	2.39E-02	1.12E+00	282612	3911681	11
61	GRID	6.69E-07	2.33E-02	9.83E-01	282633	3911668	11
56	GRID	6.05E-07	2.19E-02	8.44E-01	282673	3911504	11
57	GRID	6.85E-07	2.11E-02	8.04E-01	282631	3911566	11
54	GRID	5.80E-07	2.10E-02	8.85E-01	282743	3911400	11
53	GRID	5.88E-07	2.07E-02	8.92E-01	282753	3911377	11
55	GRID	6.04E-07	2.03E-02	7.83E-01	282731	3911422	11

RECEPTORS WITH HIGHEST ACUTE HI

REC	TYPE	CANCER	CHRONIC	ACUTE	UTME	UTMN	ZONE
62	GRID	6.05E-07	2.39E-02	1.12E+00	282612	3911681	11
61	GRID	6.69E-07	2.33E-02	9.83E-01	282633	3911668	11
81	GRID	9.08E-07	1.95E-02	9.41E-01	282362	3912769	11
80	GRID	9.10E-07	2.00E-02	9.37E-01	282361	3912750	11
60	GRID	7.39E-07	2.46E-02	8.98E-01	282672	3911635	11
59	GRID	7.23E-07	2.40E-02	8.93E-01	282664	3911618	11
53	GRID	5.88E-07	2.07E-02	8.92E-01	282753	3911377	11
64	GRID	4.90E-07	1.85E-02	8.86E-01	282478	3911748	11
54	GRID	5.80E-07	2.10E-02	8.85E-01	282743	3911400	11
65	GRID	5.96E-07	1.83E-02	8.81E-01	282387	3911793	11

AAQA for HECA 5-21-2010 (S-7616)
All Values are in ug/m^3

	NOx 1 Hour	NOx Annual	CO 1 Hour	CO 8 Hour	SOx 1 Hour	SOx 3 Hour	SOx 24 Hour	SOx Annual	PM 24 Hour	PM Annual
15	2.103E+00	5.181E-04	2.289E+02	5.623E+00	6.089E-03	3.829E-03	7.933E-04	1.006E-05	1.160E+00	1.211E-04
ASUCOOL1	0.000E+00	0.000E+00	0.000E+00	0.000E+00	0.000E+00	0.000E+00	0.000E+00	0.000E+00	1.100E-01	6.534E-03
ASUCOOL2	0.000E+00	0.000E+00	0.000E+00	0.000E+00	0.000E+00	0.000E+00	0.000E+00	0.000E+00	1.162E-01	6.696E-03
ASUCOOL3	0.000E+00	0.000E+00	0.000E+00	0.000E+00	0.000E+00	0.000E+00	0.000E+00	0.000E+00	1.134E-01	6.832E-03
ASUCOOL4	0.000E+00	0.000E+00	0.000E+00	0.000E+00	0.000E+00	0.000E+00	0.000E+00	0.000E+00	1.121E-01	6.846E-03
AUX_BOIL	1.877E-01	5.040E-03	1.459E+01	8.238E-01	6.612E-02	3.978E-02	2.641E-02	3.399E-03	1.852E-01	5.843E-03
CO2VENT	0.000E+00	0.000E+00	1.569E+03	5.020E+02	0.000E+00	0.000E+00	0.000E+00	0.000E+00	0.000E+00	0.000E+00
DC1	0.000E+00	0.000E+00	0.000E+00	0.000E+00	0.000E+00	0.000E+00	0.000E+00	0.000E+00	2.328E-01	4.648E-03
DC2	0.000E+00	0.000E+00	0.000E+00	0.000E+00	0.000E+00	0.000E+00	0.000E+00	0.000E+00	2.209E-01	2.756E-03
DC3	0.000E+00	0.000E+00	0.000E+00	0.000E+00	0.000E+00	0.000E+00	0.000E+00	0.000E+00	2.336E-01	1.804E-02
DC4	0.000E+00	0.000E+00	0.000E+00	0.000E+00	0.000E+00	0.000E+00	0.000E+00	0.000E+00	3.941E-02	8.466E-03
DC5	0.000E+00	0.000E+00	0.000E+00	0.000E+00	0.000E+00	0.000E+00	0.000E+00	0.000E+00	6.023E-02	1.047E-02
DC6	0.000E+00	0.000E+00	0.000E+00	0.000E+00	0.000E+00	0.000E+00	0.000E+00	0.000E+00	3.201E-02	5.092E-04
EMERGEN1	6.658E-01	5.444E-04	2.265E+02	2.301E+00	6.105E-03	3.840E-03	7.779E-04	1.542E-05	1.228E+00	1.949E-04
FIREPUMP	3.152E-01	1.394E-03	7.375E+01	3.354E-01	1.467E-03	9.449E-04	1.850E-04	6.912E-06	3.548E-02	7.603E-06
GASCOOL1	0.000E+00	0.000E+00	0.000E+00	0.000E+00	0.000E+00	0.000E+00	0.000E+00	0.000E+00	1.792E-01	1.665E-02
GASCOOL2	0.000E+00	0.000E+00	0.000E+00	0.000E+00	0.000E+00	0.000E+00	0.000E+00	0.000E+00	1.831E-01	1.634E-02
GASCOOL3	0.000E+00	0.000E+00	0.000E+00	0.000E+00	0.000E+00	0.000E+00	0.000E+00	0.000E+00	1.867E-01	1.583E-02
GASCOOL4	0.000E+00	0.000E+00	0.000E+00	0.000E+00	0.000E+00	0.000E+00	0.000E+00	0.000E+00	1.797E-01	1.535E-02
GASVENTB	4.294E+00	1.129E-01	7.432E+00	9.000E-01	4.491E-02	2.447E-02	2.609E-03	1.054E-03	1.215E-01	3.694E-03
GF_FLARE	6.092E+00	3.110E-03	3.582E+01	2.498E+00	2.537E-01	1.085E-01	1.049E-02	5.971E-05	2.207E-06	3.185E-06

HRSGSTK	1.562E+02	2.874E-01	2.437E+02	2.412E+01	3.318E+00	2.272E+00	3.198E-01	6.789E-02	3.195E-01	1.971E-01
PWCOOL1	0.000E+00	0.000E+00	0.000E+00	0.000E+00	0.000E+00	0.000E+00	0.000E+00	0.000E+00	1.028E-01	1.708E-02
PWCOOL2	0.000E+00	0.000E+00	0.000E+00	0.000E+00	0.000E+00	0.000E+00	0.000E+00	0.000E+00	1.258E-01	1.765E-02
PWCOOL3	0.000E+00	0.000E+00	0.000E+00	0.000E+00	0.000E+00	0.000E+00	0.000E+00	0.000E+00	1.424E-01	1.817E-02
PWCOOL4	0.000E+00	0.000E+00	0.000E+00	0.000E+00	0.000E+00	0.000E+00	0.000E+00	0.000E+00	1.544E-01	1.869E-02
PWCOOL5	0.000E+00	0.000E+00	0.000E+00	0.000E+00	0.000E+00	0.000E+00	0.000E+00	0.000E+00	1.690E-01	1.914E-02
PWCOOL6	0.000E+00	0.000E+00	0.000E+00	0.000E+00	0.000E+00	0.000E+00	0.000E+00	0.000E+00	1.809E-01	1.958E-02
PWCOOL7	0.000E+00	0.000E+00	0.000E+00	0.000E+00	0.000E+00	0.000E+00	0.000E+00	0.000E+00	1.911E-01	2.002E-02
PWCOOL8	0.000E+00	0.000E+00	0.000E+00	0.000E+00	0.000E+00	0.000E+00	0.000E+00	0.000E+00	1.991E-01	2.049E-02
PWCOOL9	0.000E+00	0.000E+00	0.000E+00	0.000E+00	0.000E+00	0.000E+00	0.000E+00	0.000E+00	2.061E-01	2.091E-02
PWCOOL10	0.000E+00	0.000E+00	0.000E+00	0.000E+00	0.000E+00	0.000E+00	0.000E+00	0.000E+00	2.115E-01	2.128E-02
PWCOOL11	0.000E+00	0.000E+00	0.000E+00	0.000E+00	0.000E+00	0.000E+00	0.000E+00	0.000E+00	2.170E-01	2.145E-02
PWCOOL12	0.000E+00	0.000E+00	0.000E+00	0.000E+00	0.000E+00	0.000E+00	0.000E+00	0.000E+00	2.230E-01	2.139E-02
PWCOOL13	0.000E+00	0.000E+00	0.000E+00	0.000E+00	0.000E+00	0.000E+00	0.000E+00	0.000E+00	1.943E-01	1.928E-02
RC_FLARE	7.333E-03	6.748E-04	2.845E-02	3.101E-02	1.385E-04	6.266E-05	1.330E-05	1.424E-05	4.605E-05	1.836E-05
SRUFLARE	1.806E+00	5.978E-04	6.098E-01	4.189E-01	2.193E+01	1.260E+01	2.828E+00	1.365E-03	1.672E-03	2.214E-05
TAIL_TO	1.479E+00	4.849E-05	1.812E+00	7.643E-01	3.136E-01	1.751E-01	3.136E-02	5.876E-02	4.399E-02	2.233E-03
Background	1.224E+02	3.252E+01	4.078E+03	2.563E+03	1.598E+02	1.332E+02	7.193E+01	2.664E+01	2.670E+02	8.300E+01
Facility Totals	2.956E+02	3.293E+01	6.479E+03	3.103E+03	1.858E+02	1.484E+02	7.515E+01	2.677E+01	2.744E+02	8.360E+01
AAQS	188.68	56	AQ-3 23000	10000	655	1300	105	80	50	30
	Fail	**Pass**	**Pass**	**Pass**	**Pass**	**Pass**	**Pass**	**Pass**	**Fail**	**Fail**

Commissioning 152.64 Pass Tier IV
operational 177.16 Pass II

-83 Background
0.6

EPA's Significance Level (ug/m^3)

NOx 1 Hour	NOx Annual	CO 1 Hour	CO 8 Hour	SOx 1 Hour	SOx 3 Hour	SOx 24 Hour	SOx Annual	PM 24 Hour	PM Annual
0.0	1.0	2000.0	500.0	0.0	25.0	5.0	1.0	5.0	1.0

modeled value → 4.49 PASS 0.6 PASS

AAQA Emission (g/sec)

Device	NOx 1 Hour	NOx Annual	CO 1 Hour	CO 8 Hour	SOx 1 Hour	SOx 3 Hour	SOx 24 Hour	SOx Annual	PM 24 Hour	PM Annual
15	4.06E-01	2.32E-03	2.11E+00	2.11E+00	4.20E-03	4.20E-03	4.20E-03	2.88E-05	5.67E-02	3.31E-04
DC3	0.00E+00	0.00E+00	0.00E+00	0.00E+00	0.00E+00	0.00E+00	0.00E+00	0.00E+00	4.12E-02	3.63E-02
DC4	0.00E+00	0.00E+00	0.00E+00	0.00E+00	0.00E+00	0.00E+00	0.00E+00	0.00E+00	2.63E-02	2.32E-02
DC5	0.00E+00	0.00E+00	0.00E+00	0.00E+00	0.00E+00	0.00E+00	0.00E+00	0.00E+00	2.52E-02	2.23E-02
DC6	0.00E+00	0.00E+00	0.00E+00	0.00E+00	0.00E+00	0.00E+00	0.00E+00	0.00E+00	6.67E-03	9.99E-04
EMERGEN1	4.06E-01	2.32E-03	2.11E+00	2.11E+00	4.20E-03	4.20E-03	4.20E-03	2.88E-05	5.67E-02	3.31E-04
FIREPUMP	2.31E-01	2.65E-03	4.02E-01	4.02E-01	1.05E-03	1.05E-03	1.05E-03	1.44E-05	1.57E-03	1.44E-05
GASCOOL1	0.00E+00	0.00E+00	0.00E+00	0.00E+00	0.00E+00	0.00E+00	0.00E+00	0.00E+00	3.00E-02	2.85E-02
GASCOOL2	0.00E+00	0.00E+00	0.00E+00	0.00E+00	0.00E+00	0.00E+00	0.00E+00	0.00E+00	3.00E-02	2.85E-02
GASCOOL3	0.00E+00	0.00E+00	0.00E+00	0.00E+00	0.00E+00	0.00E+00	0.00E+00	0.00E+00	3.00E-02	2.85E-02
GASCOOL4	0.00E+00	0.00E+00	0.00E+00	0.00E+00	0.00E+00	0.00E+00	0.00E+00	0.00E+00	3.00E-02	2.85E-02
ASUCOOL1	0.00E+00	0.00E+00	0.00E+00	0.00E+00	0.00E+00	0.00E+00	0.00E+00	0.00E+00	2.85E-02	2.71E-02
GASVENTB	1.09E+00	2.24E-01	3.29E-01	3.29E-01	9.45E-03	9.45E-03	9.45E-03	1.96E-03	3.46E-02	7.08E-03
GF_FLARE	1.50E+01	2.06E-01	7.90E+01	7.90E+01	5.98E-01	5.98E-01	5.98E-01	3.41E-03	2.10E-04	1.87E-04
HRSGSTK	2.10E+01	4.83E+00	2.12E+02	8.25E+01	6.42E-01	6.42E-01	6.42E-01	8.12E-01	2.54E+00	2.37E+00
PWCOOL1	0.00E+00	0.00E+00	0.00E+00	0.00E+00	0.00E+00	0.00E+00	0.00E+00	0.00E+00	3.82E-02	3.63E-02
PWCOOL2	0.00E+00	0.00E+00	0.00E+00	0.00E+00	0.00E+00	0.00E+00	0.00E+00	0.00E+00	3.82E-02	3.63E-02
PWCOOL3	0.00E+00	0.00E+00	0.00E+00	0.00E+00	0.00E+00	0.00E+00	0.00E+00	0.00E+00	3.82E-02	3.63E-02
PWCOOL4	0.00E+00	0.00E+00	0.00E+00	0.00E+00	0.00E+00	0.00E+00	0.00E+00	0.00E+00	3.82E-02	3.63E-02
PWCOOL5	0.00E+00	0.00E+00	0.00E+00	0.00E+00	0.00E+00	0.00E+00	0.00E+00	0.00E+00	3.82E-02	3.63E-02
PWCOOL7	0.00E+00	0.00E+00	0.00E+00	0.00E+00	0.00E+00	0.00E+00	0.00E+00	0.00E+00	3.82E-02	3.63E-02
PWCOOL8	0.00E+00	0.00E+00	0.00E+00	0.00E+00	0.00E+00	0.00E+00	0.00E+00	0.00E+00	3.82E-02	3.63E-02
ASUCOOL2	0.00E+00	0.00E+00	0.00E+00	0.00E+00	0.00E+00	0.00E+00	0.00E+00	0.00E+00	2.85E-02	2.71E-02
PWCOOL9	0.00E+00	0.00E+00	0.00E+00	0.00E+00	0.00E+00	0.00E+00	0.00E+00	0.00E+00	3.82E-02	3.63E-02
PWCOOL10	0.00E+00	0.00E+00	0.00E+00	0.00E+00	0.00E+00	0.00E+00	0.00E+00	0.00E+00	3.82E-02	3.63E-02
PWCOOL11	0.00E+00	0.00E+00	0.00E+00	0.00E+00	0.00E+00	0.00E+00	0.00E+00	0.00E+00	3.82E-02	3.63E-02
PWCOOL12	0.00E+00	0.00E+00	0.00E+00	0.00E+00	0.00E+00	0.00E+00	0.00E+00	0.00E+00	3.82E-02	3.63E-02
PWCOOL13	0.00E+00	0.00E+00	0.00E+00	0.00E+00	0.00E+00	0.00E+00	0.00E+00	0.00E+00	3.82E-02	3.63E-02

AAQA Emission (g/sec)

Device	NOx 1 Hour	NOx Annual	CO 1 Hour	CO 8 Hour	SOx 1 Hour	SOx 3 Hour	SOx 24 Hour	SOx Annual	PM 24 Hour	PM Annual
RC_FLARE	4.72E-03	4.53E-03	3.15E-03	3.15E-03	1.05E-04	1.05E-04	1.05E-04	8.63E-05	1.05E-04	1.15E-04
SRUFLARE	5.42E-01	7.00E-03	3.65E-01	3.65E-01	2.32E+00	2.32E+00	2.32E+00	1.07E-02	1.39E-02	1.73E-04
PWCOOL6	0.00E+00	0.00E+00	0.00E+00	0.00E+00	0.00E+00	0.00E+00	0.00E+00	0.00E+00	3.82E-02	3.63E-02
TAIL_TO	3.02E-01	3.02E-04	4.31E-01	4.31E-01	2.52E-01	2.52E-01	2.52E-01	2.52E-01	9.45E-02	9.58E-03
ASUCOOL3	0.00E+00	0.00E+00	0.00E+00	0.00E+00	0.00E+00	0.00E+00	0.00E+00	0.00E+00	2.85E-02	2.71E-02
ASUCOOL4	0.00E+00	0.00E+00	0.00E+00	0.00E+00	0.00E+00	0.00E+00	0.00E+00	0.00E+00	2.85E-02	2.71E-02
AUX_BOIL	1.07E-01	2.68E-02	6.62E-01	6.62E-01	5.09E-02	5.09E-02	5.09E-02	1.27E-02	8.92E-02	2.24E-02
CO2VENT	0.00E+00	0.00E+00	5.34E+01	5.34E+01	0.00E+00	0.00E+00	0.00E+00	0.00E+00	0.00E+00	0.00E+00
DC1	0.00E+00	0.00E+00	0.00E+00	0.00E+00	0.00E+00	0.00E+00	0.00E+00	0.00E+00	3.49E-02	6.75E-03
DC2	0.00E+00	0.00E+00	0.00E+00	0.00E+00	0.00E+00	0.00E+00	0.00E+00	0.00E+00	8.84E-02	1.71E-02

Facility ID **S-7616**
Monitor Site Name **Bakersfield Golden State**

Commissioning	Modeling	Design Value	Impact	NAAQS Limit	Pass / Fail	Margin
District Tiers	ug/m3					
Tier I (max yr)	**117.17**	**119.5**	236.67	188.68	F	-47.99
Tier II (max 8th)	**78.44**	**119.5**	197.94	188.68	F	-9.26
Tier III (ave.5yr)	**69.55**	**119.5**	189.05	188.68	F	-0.37
Tier IV	**152.64**		152.64	188.68	P	36.04

Year	2004	2005	2006	2007	2008	Max
Tier I (max yr)	**84.34293**	**110.13103**	**115.905**	**108.69186**	**117.1718**	**117.17**
Tier II (max 8th)	**58.12072**	**75.17722**	**74.57384**	**74.44202**	**78.43948**	**78.439**

Operational	Modeling	Design Value	Impact	NAAQS Limit	Pass / Fail	Margin
District Tiers	ug/m3					
Tier I (max yr)	**95.06**	**119.5**	214.56	188.68	F	-25.88
Tier II (max 8th)	**57.66**	**119.5**	177.16	188.68	P	11.51
Tier III (ave.5yr)			0.00	188.68	P	188.68
Tier IV			0.00	188.68	P	188.68

Year	2004	2005	2006	2007	2008	Max
Tier I (max yr)	**52.1832**	**91.69877**	**95.05621**	**94.11083**	**89.46723**	**95.056**
Tier II (max 8th)	**50.03437**	**57.56972**	**56.59408**	**55.00981**	**57.66496**	**57.665**

List of Units:	Rating	Equipment Type	Fuel Type
1			
2			

APPENDIX I
Hazardous Air Pollutant Summary

Project Total **HAP Emissions Summary**

Hydrogen Energy International LLC *5/26/2010*
HECA Project

Compound	CAS #	Annual Rate (tons per year)	CTG/HRSG Syngas	Cooling Tower (Power Block)	Cooling Tower (Process Area)	Cooling Tower (ASU)	Auxiliary Boiler	Emergency Generators (2)	Fire Water Pump	Gasification Flare	SRU Flare	Rectisol Flare
1,3-Buladiene	106-99-0	0.00E+00										
Acetaldehyde	75-07-0	2.24E-02	1.82E-02							4.12E-03	8.33E-05	
Acrolein	107-02-8	9.78E-04								9.56E-04	1.94E-05	
Ammonia*	7664-41-7	7.71E+01	7.66E+01				3.42E-01					
Antimony	7440-36-0	1.11E-02	1.11E-02									
Arsenic	7440-38-2	2.44E-02	2.43E-02	4.69E-05	1.13E-05	1.08E-05	2.96E-05			1.92E-05	3.87E-07	2.58E-07
Barium	7440-39-3	5.67E-06										5.67E-06
Benzene	71-43-2	4.03E-02	2.43E-02				3.11E-04			1.52E-02	3.08E-04	2.71E-06
Beryllium	7440-41-7	2.64E-03	2.63E-03				1.78E-06			1.15E-06	2.32E-08	1.55E-08
Cadmium	7440-43-9	9.75E-02	9.72E-02				1.63E-04			1.05E-04	2.13E-06	1.42E-06
Carbon Disulfide	75-15-0	4.66E-01	4.66E-01									
Carbonyl Sulfide	463-58-1	9.91E+00										
Chromium	7440-47-3	2.40E-04								1.34E-04	2.71E-06	1.80E-06
Chromium, (hexavalent)	18540-29-9	1.55E-03	1.55E-03									
Chromium, Total	0-00-5	5.37E-03	5.16E-03				2.07E-04					
Cobalt	7440-48-4	2.66E-03	2.63E-03				1.24E-05			8.05E-06	1.63E-07	1.08E-07
Copper*	7440-50-8	2.85E-04		9.10E-06	2.20E-06	2.09E-06	1.26E-04			8.15E-05	1.65E-06	1.10E-06
Cyanides	57-12-5	6.28E-02	5.77E-02									
Ethylbenzene	100-41-4	1.41E-01								1.38E-01	2.80E-03	
Fluoride*		1.21E-03		8.19E-04	1.98E-04	1.88E-04						
Formaldehyde	50-00-0	3.03E-01	1.72E-01				1.11E-02			1.12E-01	2.26E-03	9.66E-05
Hexane	110-54-3	4.00E-01					2.67E-01					2.32E-03
Hydrochloric Acid	7647-01-0	1.32E-01	1.32E-01									
Hydrogen Fluoride (hydrofluoric acid)	7664-39-3	5.06E-01	5.06E-01									
Hydrogen Sulfide	7783-06-4	3.72E+00										
Lead	7439-92-1	5.72E-03	5.67E-03							4.79E-05	9.69E-07	
Manganese	7439-96-5	1.41E-02	1.05E-02	2.34E-03	5.68E-04	5.38E-04	5.63E-05			3.64E-05	7.36E-07	4.90E-07
Mercury	7439-97-6	1.22E-02	1.21E-02				3.85E-05			2.49E-05	5.04E-07	3.35E-07
Methanol	67-56-1	7.09E+00										
Methyl Bromide (Bromomethane)	74-83-9	4.83E-01	4.83E-01									
Methylene Chloride (Dichloromethane)	75-09-2	2.23E-02	2.23E-02									
Naphthalene	91-20-3	2.65E-02	2.53E-02				9.03E-05			1.05E-03	2.13E-05	7.86E-07
n-Hexane	110-54-3	2.84E-03								2.78E-03	5.62E-05	
Nickel	7440-02-0	4.62E-03	3.95E-03				3.11E-04			2.01E-04	4.07E-06	2.71E-06
Phenol	108-95-2	3.73E-01	3.73E-01									
Propylene*	115-07-1	6.57E+00								2.34E-01	4.73E-03	
Propylene Oxide	75-56-9	0.00E+00										
Selenium	7782-49-2	5.73E-03	5.67E-03	3.90E-05	9.42E-06	8.95E-06	3.55E-06			2.30E-06	4.65E-08	3.09E-08
Sulfuric Acid and Sulfates*	7664-93-9	5.79E+00	5.79E+00									
Toluene	108-88-3	6.78E-03	3.34E-04				5.03E-04			5.56E-03	1.12E-04	4.38E-06
Vanadium*	7440-62-2	7.35E-04					3.41E-04			2.20E-04	4.46E-06	2.96E-06
Xylenes	1330-20-7	2.84E-03								2.78E-03	5.62E-05	
Diesel Particulate Matter*	DPM	3.22E-02						2.39E-02	9.19E-04			
2-Methylnaphthalene	PAH	5.33E-06					3.55E-06					3.09E-08
3-Methylchloranthrene	PAH	4.00E-07					2.67E-07					2.32E-09
7,12-Dimethylbenz(a)anthracene	PAH	3.55E-06					2.37E-06					2.06E-08
Acenaphthene	PAH	4.00E-07					2.67E-07					2.32E-09
Acenaphthylene	PAH	4.00E-07					2.67E-07					2.32E-09
Anthracene	PAH	5.33E-07					3.55E-07					3.09E-09
Benz(a)anthracene	PAH	2.34E-05	2.33E-05									2.32E-09
Benzo(a)anthracene	PAH	2.67E-07					2.67E-07					
Benzo(a)pyrene	PAH	2.66E-07					1.78E-07					1.55E-09
Benzo(b)fluoranthene	PAH	4.00E-07					2.67E-07					2.32E-09
Benzo(g,h,i)perylene	PAH	2.66E-07					1.78E-07					1.55E-09
Benzo(k)fluoranthene	PAH	4.00E-07					2.67E-07					2.32E-09
Chrysene	PAH	4.00E-07					2.67E-07					2.32E-09
Dibenzo(a,h)anthracene	PAH	2.66E-07					1.78E-07					1.55E-09
Dichlorobenzene	PAH	1.55E-06										1.55E-06
Fluoranthene	PAH	6.66E-07					4.44E-07					3.86E-09
Fluorene	PAH	6.21E-07					4.15E-07					3.61E-09
Indeno(1,2,3-cd)pyrene	PAH	4.00E-07					2.67E-07					2.32E-09
PAH (excluding Naphthalene)	PAH	2.93E-04								2.88E-04	5.81E-06	
Phenanthrene	PAH	3.77E-06					2.52E-06					2.19E-08
Pyrene	PAH	1.11E-06					7.40E-07					6.44E-09
Total Combined HAPs and TACs		**113.36**	**84.81**	**3.26E-03**	**7.87E-04**	**7.48E-04**	**6.22E-01**	**2.39E-02**	**9.19E-04**	**5.18E-01**	**1.05E-02**	**2.44E-03**
Total HAPs*		**23.90**	**2.46**	**2.43E-03**	**5.87E-04**	**5.58E-04**	**2.79E-01**	**0.00E+00**	**0.00E+00**	**2.84E-01**	**5.74E-03**	**2.44E-03**

Notes:

* Denotes pollutants that are not listed as Federal HAPs. These pollutants are not included in the HAP total provided.

As shown, combined annual HAP emissions are less than 25 tons per year. Additionally, individual HAP emissions are below 10 tons per year.

Tg Thermal Oxidizer	CO_2 Vent	Gasifier Warming (3)	Onsite LHD Truck (10)	Coal& Solids Trucks	Fugitive
					0.17
8.34E-06		6.17E-06			
8.76E-05		6.48E-05			
5.01E-07		3.70E-07			
4.59E-05		3.39E-05			
	9.86E+00				4.81E-02
5.84E-05		4.32E-05			
3.50E-06		2.59E-06			
3.55E-05		2.62E-05			
					5.06E-03
3.13E-03		2.31E-03			
7.51E-02		5.55E-02			
	1.30E+00				2.42
1.59E-05		1.17E-05			
1.08E-05		8.02E-06			
					7.09E+00
2.54E-05		1.88E-05			
8.76E-05		6.48E-05			
					6.33E+00
1.00E-06		7.41E-07			
1.42E-04		1.05E-04			
9.59E-05		7.10E-05			
			3.42E-03	3.94E-03	
1.00E-06		7.41E-07			
7.51E-08		5.55E-08			
6.67E-07		4.94E-07			
7.51E-08		5.55E-08			
7.51E-08		5.55E-08			
1.00E-07		7.41E-08			
7.51E-08		5.55E-08			
5.01E-08		3.70E-08			
7.51E-08		5.55E-08			
5.01E-08		3.70E-08			
7.51E-08		5.55E-08			
7.51E-08		5.55E-08			
5.01E-08		3.70E-08			
1.25E-07		9.26E-08			
1.17E-07		8.64E-08			
7.51E-08		5.55E-08			
7.09E-07		5.25E-07			
2.09E-07		1.54E-07			
7.88E-02	**1.12E+01**	**5.83E-02**	**3.42E-03**	**3.94E-03**	**1.61E+01**
7.87E-02	**1.12E+01**	**5.82E-02**	**0.00E+00**	**0.00E+00**	**9.56E+00**

CTG/HRSG Stack - SynGas

HAP Emissions Summary

Hydrogen Energy International LLC
HECA Project

5/26/2010

Annual emissions based on 100 percent load at annual average temperature (65°F)

HRSG Heat Input (Yearly Average - 65°F) =	2,159.00	10^6 Btu/hr (higher heating value)
Duct Burner Heat Input (Yearly Average - 65°F) =	273.76	10^6 Btu/hr ((higher heating value)
Total HRSG Heat Input (Yearly Average - 65°F) =	2,432.76	10^6 Btu/hr ((higher heating value)

Hourly emissions based on 100 percent load at winter minimum temperature (20°F)

HRSG Heat Input (Winter Minimum - 20°F) =	2,176.00	10^6 Btu/hr ((higher heating value)
Duct Burner Heat Input (Winter Minimum - 20°F) =	273.76	10^6 Btu/hr ((higher heating value)
Total HRSG Heat Input (Winter Minimum - 20°F) =	2,449.76	10^6 Btu/hr ((higher heating value)
HRSG (Firing Syngas) Operating Hours =	8,322.0	hr/yr

Compound	CAS #	Emission Factor ($lb/10^{12}$ Btu coal)	Hourly (lb/hr)	Annual (lb/yr)
Acetaldehyde	75-07-0	1.8	4.41E-03	3.64E+01
Ammonia	7664-41-7		1.84E+01	1.53E+05
Antimony	7440-36-0	1.1	2.69E-03	2.23E+01
Arsenic	7440-38-2	2.4	5.88E-03	4.86E+01
Benz[a]anthracene	56-55-3	0.0023	5.63E-06	4.66E-02
Benzene	71-43-2	2.4	5.88E-03	4.86E+01
Beryllium	7440-41-7	0.26	6.37E-04	5.26E+00
Cadmium	7440-43-9	9.6	2.35E-02	1.94E+02
Carbon disulfide	75-15-0	46	1.13E-01	9.31E+02
Chromium (hexavalent)	18540-29-9	0.15	3.75E-04	3.10E+00
Chromium, total	0-00-5	0.51	1.25E-03	1.03E+01
Cobalt	7440-48-4	0.26	6.37E-04	5.26E+00
Cyanides	57-12-5	5.7	1.40E-02	1.15E+02
Formaldehyde	50-00-0	17	4.16E-02	3.44E+02
Hydrochloric acid	7647-01-0	13	3.18E-02	2.63E+02
Hydrogen fluoride (Hydrofluoric acid)	7664-39-3	50	1.22E-01	1.01E+03
Lead	7439-92-1	0.56	1.37E-03	1.13E+01
Manganese	7439-96-5	1.0	2.55E-03	2.11E+01
Mercury	7439-97-6	1.2	2.94E-03	2.43E+01
Methyl bromide (Bromomethane)	74-83-9	47.7	1.17E-01	9.66E+02
Methylene chloride (Dichloromethane)	75-09-2	2.2	5.39E-03	4.45E+01
Naphthalene	91-20-3	2.5	6.12E-03	5.06E+01
Nickel	7440-02-0	0.39	9.55E-04	7.90E+00
Phenol	108-95-2	36.8	9.02E-02	7.45E+02
Selenium	7782-49-2	0.56	1.37E-03	1.13E+01
Sulfuric acid and sulfates	7664-93-9	572	1.40E+00	1.16E+04
Toluene	108-88-3	0.033	8.08E-05	6.68E-01

Notes:

Under a mature operating scenario, the unit will primarily fire syngas.

1) HRSG (firing syngas) operating hours = 8,322 hour per year

2) Hourly emissions based on 100 percent load at winter minimum temperature (20°F)

3) Annual emissions based on 100 percent load at annual average temperature (65°F)

4) Emission rates are taken from Wabash River test data and the National Energy Technology Laboratory, U.S. Dept of Energy, Major Environmental Aspects of Gasification-based Power Generation Technologies, Final Report, December 2002.

5) Ammonia slip from the SCR (5 parts per million volume dry @ 15 percent O_2) - provided by Fluor - see Criteria Pollutant emission spreadsheet for details

Btu = British thermal units

Cooling Towers — HAP Emissions Summary

Hydrogen Energy International LLC — *5/26/2010*
HECA Project

Cooling Tower Operating Parameters

	Power Block	Process Area	ASU
Cooling water (CW) circulation rate, gpm =	175,000	42,300	40,200
CW circulation rate (million lb/hr) =	88	21	20
CW dissolved solids (ppmw) =	9,000	9,000	9,000
Drift, fraction of circulating CW =	0.0005%	0.0005%	0.0005%

Note: Assumed 9,000 ppm TDS in circulating cooling water. Circulating water could range from 1,200 to 90,000 ppm TDS depending on makeup water quality and tower operation. PM_{10} emissions would vary proportionately.

Cooling Tower Operating Hours = 8,322.0 hours per year

Power Block

Compound	CAS #	Emission Factor (ppm)	Hourly (lb/hr)	Annual (lb/yr)
Arsenic	7440-38-2	0.026	1.13E-05	9.38E-02
Copper	7440-50-8	0.005	2.19E-06	1.82E-02
Fluoride		0.45	1.97E-04	1.64E+00
Manganese	7439-96-5	1.29	5.63E-04	4.68E+00
Selenium	7784-49-2	0.02	9.36E-06	7.79E-02

Notes:

1) Power block operating hours = 8,322 hours per year
2) Arsenic ppm value shown taken as average of analytical test results (Fruit Growers Laboratory)
3) Copper ppm value shown is one-half of stated detection limit
4) Fluoride ppm value shown taken as average of analytical test results (Fruit Growers Laboratory)
5) Manganese ppm value shown taken as average of analytical test results (Fruit Growers Laboratory)
5) Selenium ppm value shown taken as average of analytical test results (DWR)
7) Zinc ppm value shown is one-half of stated detection limit and is no longer in OEHHA list of TAC

Gasifier Process Area

Compound	CAS #	Emission Factor (ppm)	Hourly (lb/hr)	Annual (lb/yr)
Arsenic	7440-38-2	0.026	2.72E-06	2.27E-02
Copper	7440-50-8	0.005	5.29E-07	4.40E-03
Fluoride		0.45	4.76E-05	3.96E-01
Manganese	7439-96-5	1.29	1.36E-04	1.13E+00
Selenium	7784-49-2	0.02	2.26E-06	1.88E-02

Notes:

1) Process area operating hours = 8,322 hours per year
2) Arsenic ppm value shown taken as average of analytical test results (Fruit Growers Laboratory)
3) Copper ppm value shown is one-half of stated detection limit
4) Fluoride ppm value shown taken as average of analytical test results (Fruit Growers Laboratory)
5) Manganese ppm value shown taken as average of analytical test results (Fruit Growers Laboratory)
5) Selenium ppm value shown taken as average of analytical test results (DWR)
7) Zinc ppm value shown is one-half of stated detection limit and is no longer in OEHHA list of TAC

ASU

Compound	CAS #	Emission Factor (ppm)	Hourly (lb/hr)	Annual (lb/yr)
Arsenic	7440-38-2	0.026	2.59E-06	2.15E-02
Copper	7440-50-8	0.005	5.03E-07	4.18E-03
Fluoride		0.45	4.52E-05	3.76E-01
Manganese	7439-96-5	1.29	1.29E-04	1.08E+00
Selenium	7784-49-2	0.02	2.15E-06	1.79E-02

Notes:

1) ASU operating hours = 8,322 hours per year
2) Arsenic ppm value shown taken as average of analytical test results (Fruit Growers Laboratory)
3) Copper ppm value shown is one-half of stated detection limit
4) Fluoride ppm value shown taken as average of analytical test results (Fruit Growers Laboratory)
5) Manganese ppm value shown taken as average of analytical test results (Fruit Growers Laboratory)
5) Selenium ppm value shown taken as average of analytical test results (DWR)
7) Zinc ppm value shown is one-half of stated detection limit and is no longer in OEHHA list of TAC

Gasifier Refractory Heaters

HAP Emissions Summary

Hydrogen Energy International LLC
HECA Project

5/26/2010

Operating Parameters

Gasifier Heat Input =	18	10^6 Btu/hr (HHV)
Reference HHV =	1,050	Btu/scf
=	0.017	10^6 scf/hr
Gasifier Heater Operating Hours per Heater =	1,200	hours per year
Number of Heaters =	3	

Compound	CAS #	Emission Factor ($lb/10^6$ scf)	Hourly Per Heater (lb/hr)	Annual Per Heater (lb/yr)	Annual All 3 Heaters (lb/yr)
Arsenic	7440-38-2	2.00E-04	6.86E-06	4.11E-03	1.23E-02
Benzene	71-43-2	2.10E-03	7.20E-05	4.32E-02	1.30E-01
Beryllium	7440-41-7	1.20E-05	4.11E-07	2.47E-04	7.41E-04
Cadmium	7440-43-9	1.10E-03	3.77E-05	2.26E-02	6.79E-02
Chromium	7440-47-3	1.40E-03	4.80E-05	2.88E-02	8.64E-02
Cobalt	7440-48-4	8.40E-05	2.88E-06	1.73E-03	5.18E-03
Copper	7440-50-8	8.50E-04	2.91E-05	1.75E-02	5.25E-02
Formaldehyde	50-00-0	7.50E-02	2.57E-03	1.54E+00	4.63E+00
Hexane	110-54-3	1.80E+00	6.17E-02	3.70E+01	1.11E+02
Manganese	7439-96-5	3.80E-04	1.30E-05	7.82E-03	2.35E-02
Mercury	7439-97-6	2.60E-04	8.91E-06	5.35E-03	1.60E-02
Naphthalene	91-20-3	6.10E-04	2.09E-05	1.25E-02	3.76E-02
Nickel	7440-02-0	2.10E-03	7.20E-05	4.32E-02	1.30E-01
Selenium	7782-49-2	2.40E-05	8.23E-07	4.94E-04	1.48E-03
Toluene	108-88-3	3.40E-03	1.17E-04	6.99E-02	2.10E-01
Vanadium	7440-62-2	2.30E-03	7.89E-05	4.73E-02	1.42E-01
Benzo(a)pyrene	PAH	1.20E-06	4.11E-08	2.47E-05	7.41E-05
Benz(a)anthracene	PAH	1.80E-06	6.17E-08	3.70E-05	1.11E-04
Benzo(b)fluoranthene	PAH	1.80E-06	6.17E-08	3.70E-05	1.11E-04
Chrysene	PAH	1.80E-06	6.17E-08	3.70E-05	1.11E-04
Dibenzo(a,h)anthracene	PAH	1.20E-06	4.11E-08	2.47E-05	7.41E-05
Indeno(1,2,3-cd)pyrene	PAH	1.80E-06	6.17E-08	3.70E-05	1.11E-04
2-Methylnaphthalene	PAH	2.40E-05	8.23E-07	4.94E-04	1.48E-03
3-Methylchloranthrene	PAH	1.80E-06	6.17E-08	3.70E-05	1.11E-04
7,12-Dimethylbenz(a)anthracene	PAH	1.60E-05	5.49E-07	3.29E-04	9.87E-04
Acenaphthene	PAH	1.80E-06	6.17E-08	3.70E-05	1.11E-04
Acenaphthylene	PAH	1.80E-06	6.17E-08	3.70E-05	1.11E-04
Anthracene	PAH	2.40E-06	8.23E-08	4.94E-05	1.48E-04
Benzo(g,h,i)perylene	PAH	1.20E-06	4.11E-08	2.47E-05	7.41E-05
Benzo(k)fluoranthene	PAH	1.80E-06	6.17E-08	3.70E-05	1.11E-04
Fluoranthene	PAH	3.00E-06	1.03E-07	6.17E-05	1.85E-04
Fluorene	PAH	2.80E-06	9.60E-08	5.76E-05	1.73E-04
Phenanathrene	PAH	1.70E-05	5.83E-07	3.50E-04	1.05E-03
Pyrene	PAH	5.00E-06	1.71E-07	1.03E-04	3.09E-04

Notes:

1) Gasifier operating hours = 1,200 hours per year per heater

2) Emission factor source is USEPA AP-42 Section 1.4

3) Calculation assumes fuel heating value, British thermal units/standard cubic foot, higher heating value 1,050

4) Please note that there are three gasifier heaters; however, it is assumption is that up to two gasifier heaters may operate at any one time on an as-needed basis to pre-heat the gasifier.

Auxiliary Boiler — HAP Emissions Summary

Hydrogen Energy International LLC — *5/26/2010*
HECA Project

Operating Parameters

Auxiliary Boiler Heat Input =	142	10^6 Btu/hr (HHV)
=	1050	Btu/scf
=	0.135	10^6 scf/hr
Auxiliary Boiler Operating Hours =	2,190	hours per year

Compound	CAS #	Emission Factor (lb/10^6 scf)	Hourly (lb/hr)	Annual (lb/yr)
Ammonia	7664-41-7	2.31E+00	3.12E-01	6.84E+02
Arsenic	7440-38-2	2.00E-04	2.70E-05	5.92E-02
Benzene	71-43-2	2.10E-03	2.84E-04	6.22E-01
Beryllium	7440-41-7	1.20E-05	1.62E-06	3.55E-03
Cadmium	7440-43-9	1.10E-03	1.49E-04	3.26E-01
Chromium	7440-47-3	1.40E-03	1.89E-04	4.15E-01
Cobalt	7440-48-4	8.40E-05	1.14E-05	2.49E-02
Copper	7440-50-8	8.50E-04	1.15E-04	2.52E-01
Formaldehyde	50-00-0	7.50E-02	1.01E-02	2.22E+01
Hexane	110-54-3	1.80E+00	2.43E-01	5.33E+02
Manganese	7439-96-5	3.80E-04	5.14E-05	1.13E-01
Mercury	7439-97-6	2.60E-04	3.52E-05	7.70E-02
Naphthalene	91-20-3	6.10E-04	8.25E-05	1.81E-01
Nickel	7440-02-0	2.10E-03	2.84E-04	6.22E-01
Selenium	7782-49-2	2.40E-05	3.25E-06	7.11E-03
Toluene	108-88-3	3.40E-03	4.60E-04	1.01E+00
Vanadium	7440-62-2	2.30E-03	3.11E-04	6.81E-01
Benzo(a)pyrene	PAH	1.20E-06	1.62E-07	3.55E-04
Benz(a)anthracene	PAH	1.80E-06	2.43E-07	5.33E-04
Benzo(b)fluoranthene	PAH	1.80E-06	2.43E-07	5.33E-04
Chrysene	PAH	1.80E-06	2.43E-07	5.33E-04
Dibenzo(a,h)anthracene	PAH	1.20E-06	1.62E-07	3.55E-04
Indeno(1,2,3-cd)pyrene	PAH	1.80E-06	2.43E-07	5.33E-04
2-Methylnaphthalene	PAH	2.40E-05	3.25E-06	7.11E-03
3-Methylchloranthrene	PAH	1.80E-06	2.43E-07	5.33E-04
7,12-Dimethylbenz(a)anthracene	PAH	1.60E-05	2.16E-06	4.74E-03
Acenaphthene	PAH	1.80E-06	2.43E-07	5.33E-04
Acenaphthylene	PAH	1.80E-06	2.43E-07	5.33E-04
Anthracene	PAH	2.40E-06	3.25E-07	7.11E-04
Benzo(g,h,i)perylene	PAH	1.20E-06	1.62E-07	3.55E-04
Benzo(k)fluoranthene	PAH	1.80E-06	2.43E-07	5.33E-04
Fluoranthene	PAH	3.00E-06	4.06E-07	8.89E-04
Fluorene	PAH	2.80E-06	3.79E-07	8.29E-04
Phenanathrene	PAH	1.70E-05	2.30E-06	5.03E-03
Pyrene	PAH	5.00E-06	6.76E-07	1.48E-03

Notes:

1) Auxiliary boiler operating hours = 2,190 hours per year
2) Emission factor source is EPA AP-42 Section 1.4
3) Calculation assumes fuel heating value,British thermal units/standard cubic foot, higher heating value 1,050

Gasification Flare — HAP Emissions Summary

Hydrogen Energy International LLC
HECA Project

5/26/2010

Operating Parameters

Reference HHV =	1,050	btu/scf

Gasification Flare - Normal Operating Emissions From Pilot

Total Hours of Pilot Operation =	8,760	hr/yr
Ground Flare Pilot Fuel Use =	0.5	10^6 Btu/hr

Gasification Flare - Operating Emissions During Gasifier Startup and Shutdown

Total Flare SU/SD Operation =	115,500	10^6 Btu/yr
Wet Unshifted Gas-Firing Rate =	900	10^6 Btu/hr - conservatively assuming maximum possible rate
Dry Shifted Gas-Firing Rate =	770	10^6 Btu/hr - conservatively assuming maximum possible rate

Startup and shutdown flared gas scenario

Cold plant startup =	30,000	10^6 Btu/yr (1 event)	(assume 20 percent unshifted)
Plant shutdown =	500	10^6 Btu/yr (1 event)	(assume 100 percent unshifted)
Gasifier outages =	60,000	10^6 Btu/yr (24 events)	(assume 100 percent unshifted)
Gasifier hot restarts =	25,000	10^6 Btu/yr (12 events)	(assume 100 percent unshifted)
Total	115,500	10^6 Btu/yr	(approx 75 percent unshifted)

Gasification Flare - Operating Emissions During Offline CTG Wash

Total Flare CTG Wash Operation =	81,400	10^6 Btu/yr
H2 rich during CTG Wash =	1,695	10^6 Btu/hr - conservatively assuming maximum possible rate

CTG Wash flared gas scenario

Offline CTG Wash =	81,400	10^6 Btu/yr (12 event)	(assume 100% percent shifted)

Compound	CAS #	Emission Factor ($lb/10^6$ scf)	Emission ($lb/10^6$ Btu)	Hourly (lb/hr)	Annual (lb/yr)
Acetaldehyde	75-07-0	0.043	4.10E-05	6.94E-02	8.24E+00
Acrolein	107-02-8	0.01	9.52E-06	1.61E-02	1.92E+00
Benzene	71-43-2	0.159	1.51E-04	2.57E-01	3.05E+01
Ethyl Benzene	100-41-4	1.444	1.38E-03	2.33E+00	2.77E+02
Formaldehyde	50-00-0	1.169	1.11E-03	1.89E+00	2.24E+02
Naphthalene	91-20-3	0.011	1.05E-05	1.78E-02	2.11E+00
n-Hexane	110-54-3	0.029	2.76E-05	4.68E-02	5.56E+00
PAH (excluding Naphthalene)	PAH	0.003	2.86E-06	4.84E-03	5.75E-01
Propylene	115-07-1	2.44	2.32E-03	3.94E+00	4.68E+02
Toluene	108-88-3	0.058	5.52E-05	9.37E-02	1.11E+01
Xylene(s)	1330-20-7	0.029	2.76E-05	4.68E-02	5.56E+00
Arsenic	7440-38-2	2.00E-04	1.90E-07	3.23E-04	3.83E-02
Beryllium	7440-41-7	1.20E-05	1.14E-08	1.94E-05	2.30E-03
Cadmium	7440-43-9	1.10E-03	1.05E-06	1.78E-03	2.11E-01
Chromium	7440-47-3	1.40E-03	1.33E-06	2.26E-03	2.68E-01
Cobalt	7440-48-4	8.40E-05	8.00E-08	1.36E-04	1.61E-02
Copper	7440-50-8	8.50E-04	8.10E-07	1.37E-03	1.63E-01
Lead	7439-92-1	5.00E-04	4.76E-07	8.07E-04	9.58E-02
Manganese	7439-96-5	3.80E-04	3.62E-07	6.14E-04	7.28E-02
Mercury	7439-97-6	2.60E-04	2.48E-07	4.20E-04	4.98E-02
Nickel	7440-02-0	2.10E-03	2.00E-06	3.39E-03	4.03E-01
Selenium	7782-49-2	2.40E-05	2.29E-08	3.88E-05	4.60E-03
Vanadium	7440-62-2	2.30E-03	2.19E-06	3.71E-03	4.41E-01

Notes:

1) Annual operation assumes total pilot operation of 8,760 hr/yr and 115,500 10^6 Btu/yr during gasifier startup and shutdown, plus 81,400 10^6 Btu/yr for CTG washes.

2) Emission factors based on AP-42 Chpt. 1.4 (for metals) and VCAPCD AB2588 (for non-metals).

3) Calculation assumes fuel heating value, Btu/scf, higher heating value 1,050

Hydrogen Energy International LLC *5/26/2010*
HECA Project

Operating Parameters

Reference HHV = 1,050 btu/scf

SRU Flare - Normal Operating Emissions From Pilot

Total Hours of Pilot Operation = 8,760 hr/yr
Elevated Flare Pilot Fuel Use = 0.3 10^6 Btu/hr

SRU Flare - Operating Emissions During Gasifier Startup and Shutdown

Total Flare Operation During SU/SD = 40.0 hr/yr
Natural Gas Heat Rate (assist gas) = 36.0 10^6 Btu/hr

Compound	CAS #	Emission Factor ($lb/10^6$ scf)	Emission Factor ($lb/10^6$ Btu)	Hourly (lb/hr)	Annual (lb/yr)
Acetaldehyde	75-07-0	0.043	4.10E-05	1.49E-03	1.67E-01
Acrolein	107-02-8	0.01	9.52E-06	3.46E-04	3.87E-02
Benzene	71-43-2	0.159	1.51E-04	5.50E-03	6.16E-01
Ethyl Benzene	100-41-4	1.444	1.38E-03	4.99E-02	5.59E+00
Formaldehyde	50-00-0	1.169	1.11E-03	4.04E-02	4.53E+00
Naphthalene	91-20-3	0.011	1.05E-05	3.80E-04	4.26E-02
n-Hexane	110-54-3	0.029	2.76E-05	1.00E-03	1.12E-01
PAH (excluding Naphthalene)	PAH	0.003	2.86E-06	1.04E-04	1.16E-02
Propylene	115-07-1	2.44	2.32E-03	8.44E-02	9.45E+00
Toluene	108-88-3	0.058	5.52E-05	2.01E-03	2.25E-01
Xylene(s)	1330-20-7	0.029	2.76E-05	1.00E-03	1.12E-01
Arsenic	7440-38-2	2.00E-04	1.90E-07	6.91E-06	7.75E-04
Beryllium	7440-41-7	1.20E-05	1.14E-08	4.15E-07	4.65E-05
Cadmium	7440-43-9	1.10E-03	1.05E-06	3.80E-05	4.26E-03
Chromium	7440-47-3	1.40E-03	1.33E-06	4.84E-05	5.42E-03
Cobalt	7440-48-4	8.40E-05	8.00E-08	2.90E-06	3.25E-04
Copper	7440-50-8	8.50E-04	8.10E-07	2.94E-05	3.29E-03
Lead	7439-92-1	5.00E-04	4.76E-07	1.73E-05	1.94E-03
Manganese	7439-96-5	3.80E-04	3.62E-07	1.31E-05	1.47E-03
Mercury	7439-97-6	2.60E-04	2.48E-07	8.99E-06	1.01E-03
Nickel	7440-02-0	2.10E-03	2.00E-06	7.26E-05	8.14E-03
Selenium	7782-49-2	2.40E-05	2.29E-08	8.30E-07	9.30E-05
Vanadium	7440-62-2	2.30E-03	2.19E-06	7.95E-05	8.91E-03

Notes:

1) Annual operation assumes total pilot operation of 8,760 hr/yr and 6 hr/yr during gasifier startup and shutdown with assist gas.
2) Emission factors based on AP-42 Chpt. 1.4 (for metals) and VCAPCD AB2588 (for non-metals).
3) Calculation assumes fuel heating value, Btu/scf, higher heating value 1,050

Hydrogen Energy International LLC *5/26/2010*
HECA Project

Operating Parameters - Normal Operating Emissions From Pilot

Rectisol Flare Pilot Firing Rate = 0.3 MMBtu/hr
Annual Operating Hours = 8,760 hr/yr

Compound	CAS Number	Emission Factor ($lb/10^6$ scf)	Emission Factor (lb/MMBtu)	Hourly (lb/hr)	Annual (lb/yr)
2-Methylnaphthalene	91576	2.40E-05	2.35E-08	7.06E-09	6.18E-05
3-Methylchloranthrene	56495	1.80E-06	1.76E-09	5.29E-10	4.64E-06
7,12-Dimethylbenz(a)anthracene	57976	1.60E-05	1.57E-08	4.71E-09	4.12E-05
Acenaphthene	83329	1.80E-06	1.76E-09	5.29E-10	4.64E-06
Acenaphthylene	208968	1.80E-06	1.76E-09	5.29E-10	4.64E-06
Anthracene	120127	2.40E-06	2.35E-09	7.06E-10	6.18E-06
Benz(a)anthracene	56553	1.80E-06	1.76E-09	5.29E-10	4.64E-06
Benzene	71432	2.10E-03	2.06E-06	6.18E-07	5.41E-03
Benzo(a)pyrene	50328	1.20E-06	1.18E-09	3.53E-10	3.09E-06
Benzo(b)fluoranthene	205992	1.80E-06	1.76E-09	5.29E-10	4.64E-06
Benzo(g,h,i)perylene	191242	1.20E-06	1.18E-09	3.53E-10	3.09E-06
Benzo(k)fluoranthene	205823	1.80E-06	1.76E-09	5.29E-10	4.64E-06
Chrysene	218019	1.80E-06	1.76E-09	5.29E-10	4.64E-06
Dibenzo(a,h)anthracene	53703	1.20E-06	1.18E-09	3.53E-10	3.09E-06
Dichlorobenzene	25321226	1.20E-03	1.18E-06	3.53E-07	3.09E-03
Fluoranthene	206440	3.00E-06	2.94E-09	8.82E-10	7.73E-06
Fluorene	86737	2.80E-06	2.75E-09	8.24E-10	7.21E-06
Formaldehyde	50000	7.50E-02	7.35E-05	2.21E-05	1.93E-01
Hexane	110543	1.80E+00	1.76E-03	5.29E-04	4.64E+00
Indeno(1,2,3-cd)pyrene	193395	1.80E-06	1.76E-09	5.29E-10	4.64E-06
Naphthalene	91203	6.10E-04	5.98E-07	1.79E-07	1.57E-03
Phenanthrene	85018	1.70E-05	1.67E-08	5.00E-09	4.38E-05
Pyrene	129000	5.00E-06	4.90E-09	1.47E-09	1.29E-05
Toluene	108883	3.40E-03	3.33E-06	1.00E-06	8.76E-03
Arsenic	7440382	2.00E-04	1.96E-07	5.88E-08	5.15E-04
Barium	7440393	4.40E-03	4.31E-06	1.29E-06	1.13E-02
Beryllium	7440417	1.20E-05	1.18E-08	3.53E-09	3.09E-05
Cadmium	7440439	1.10E-03	1.08E-06	3.24E-07	2.83E-03
Chromium	7440473	1.40E-03	1.37E-06	4.12E-07	3.61E-03
Cobalt	7440484	8.40E-05	8.24E-08	2.47E-08	2.16E-04
Copper	7440508	8.50E-04	8.33E-07	2.50E-07	2.19E-03
Manganese	7439965	3.80E-04	3.73E-07	1.12E-07	9.79E-04
Mercury	7439976	2.60E-04	2.55E-07	7.65E-08	6.70E-04
Nickel	7440020	2.10E-03	2.06E-06	6.18E-07	5.41E-03
Selenium	7782492	2.40E-05	2.35E-08	7.06E-09	6.18E-05
Vanadium	7440622	2.30E-03	2.25E-06	6.76E-07	5.93E-03

Notes:

1) Emission factors ($lb/10^6$ scf) are from AP-42, Chapter 1.4, Table 1.4-3. Factors in pounds per 10E-06 scf were converted to factors in lb/MMBtu by dividing by 1,020.