CH2M HILL
2485 Natomas Park Drive
Suite 600
Sacramento, CA 95833
Tel 916-920-0300
Fax 916-920-8463

May 18, 2009
File No.: 04.02.16.02
Project No. 357891

DOCKET 07-AFC-5	
DATE	May 18 2009
RECD.	MAY 18 2009

Mr. John Kessler, Project Manager
California Energy Commission
Systems Assessment and Facilities Siting Division
1516 9th Street, MS 15
Sacramento, CA 95814-5504

RE: Data Response, Set 2I
Ivanpah Solar Electric Generating System (07-AFC-5)

Dear Mr. Kessler:

On behalf of Solar Partners I, LLC, Solar Partners II, LLC, Solar Partners IV, LLC, and Solar Partners VIII, LLC (Applicant), please find attached one original and four hard copies, plus five CD copies of Data Response, Set 2I.

Please call me if you have any questions.

Sincerely,

CH2M HILL

John L. Carrier, J.D.
Program Manager

Enclosure
c: POS List
Project File

Ivanpah Solar Electric Generating System (ISEGS)

(07-AFC-5)

Data Response, Set 2I

(Response to: Project Description and Soil & Water Resources)

Submitted to the

California Energy Commission

Submitted by

Solar Partners I, LLC; Solar Partners II, LLC; Solar Partners IV, LLC; and Solar Partners VIII, LLC

May 18, 2009

With Assistance from

CH2MHILL
2485 Natomas Park Drive
Suite 600
Sacramento, CA 95833

Contents

Section Page

INTRODUCTION **1**

PROJECT DESCRIPTION (130 & 131) **2**

SOIL AND WATER RESOURCES (139) **6**

Introduction

Attached are Solar Partners I, LLC, Solar Partners II, LLC, Solar Partners IV, LLC, and Solar Partners VIII, LLC (Applicant) responses to the California Energy Commission (CEC) Staff's data requests for the Ivanpah Solar Electric Generating System (Ivanpah SEGS) Project (07-AFC-5). The CEC Staff served these data requests on May 8, 2008, as part of the discovery process for Ivanpah SEGS. The responses are grouped by individual discipline or topic area. Within each discipline area, the responses are presented in the same order as CEC Staff presented them and are keyed to the Data Request numbers. New graphics or tables are numbered in reference to the Data Request number. For example, the first table used in response to Data Request 15 would be numbered Table DR15-1. The first figure used in response to Data Request 15 would be Figure DR15-1, and so on. AFC figures or tables that have been revised have "R1" following the original number, indicating revision 1.

Additional tables, figures, or documents submitted in response to a data request (supporting data, stand-alone documents such as plans, folding graphics, etc.) are found at the end of a discipline-specific section and may not be sequentially page-numbered consistently with the remainder of the document, though they may have their own internal page numbering system.

The Applicant looks forward to working cooperatively with the CEC and BLM staff as the Ivanpah SEGS Project proceeds through the siting process. We trust that these responses address the Staff's questions and remain available to have any additional dialogue the Staff may require.

Project Description (130 & 131)

BACKGROUND

Data Requests #1-3 asked for justification for requesting the 7,040 acre footprint in the BLM ROW applications when 3,400 acres were identified for plant construction and operations in the AFC. The requests also asked for identification of detailed construction, ground disturbance and reclamation measures on the other 3,640 acre footprint. Responses from the applicant did not answer the questions and asserted the lands could be utilized for unforeseen circumstances that may arise during licensing. This answer does not satisfy BLM. Only lands proposed for use by project facilities will be carried forward in the joint analysis. Other lands need to be dropped from the BLM ROW application.

DATA REQUEST

130. Provide an amended project description that addresses only those lands used for the footprint of the project.

131. Adjust all acreage calculations and legal land descriptions for the area required for the project.

Response: In Data Response Set 2A, the Applicant submitted two attachments. Attachment DR130-1 provided a legal land description (i.e., township and range) of the various project elements. That data needs to be checked to ensure it is consistent with the current project description and final substation location.

In addition, several tables were provided with acreage estimates of various project features. Those tables were revised in Data Response, Set 2B. Tables 5, 6 and 7 have been revised again using current measurements and are provided below. Attachment DR130-2 provided a Plan of Development Civil Engineering Design Package. That information is no longer current. It is replaced by an updated Plan of Development Project Description (Attachment DR130-2B) that provides a comprehensive description of the project incorporating a low impact design (LID) approach for stormwater management. Additional information on the stormwater design is provided as Data Response 139.

TABLE 5 (REVISED MAY 18, 2009)
Areas of Permanent Disturbance

FACILITY DESCRIPTION		ACRES
Ivanpah 3		1,836.3
Ivanpah 2		920.7
Ivanpah 1		913.5
Administration/warehouse & parking (Area F)[a]		8.9
Substation (Area B)		16.1
Transmission Towers (8' x 8' area every 750 feet) (Area A)		0.01
Wells [10' x 10' area for 2 supply wells (Area A) and 1 monitoring well (Area D)]		0.01
Kern River Gas Line Tap Station (100' X 150')		0.3
Southwest Gas Metering Set for Ivanpah 1 & 2 (20' X 40') (Area G)		0.02
FACILITY SUBTOTAL		3,695.8
LINEAR DESCRIPTION	**LENGTH (in feet)**	**ACRES**
12' trail around Ivanpah 3 – rerouted[b]	--	--
Gas line 12' access road (from Kern River Gas Tap to Ivanpah 3)	2,011	0.6
Gas line 12' corridor between Ivanpah 1 & 2[c]	--	--
12' trail to access mining claim – new dirt road	1,492	0.4
Colosseum Road Improvement 30' wide (asphalt) with 3' dirt shoulders	8,442	7.0
Colosseum Road realignment through the CLA (asphalt)	6,487	5.4
Colosseum Road realignment through the CLA (dirt)		0.7
Water line - 12' dirt service road to access supply wells	1,075	0.3
Monitoring well – 8' dirt service road	866	0.2
Transmission line – 24' paved access road to substation	1,760	1.0
Transmission line – 12' dirt service road along gen-tie lines	4,760	1.3
LINEAR SUBTOTAL		16.9
TOTAL AREA OF PERMANENT DISTURBANCE		**3,712.7**

NOTES:
[a] "Areas" are referring to those shown in Attachment DR130-2B, Appendix A, Figure 19.
[b] Area for this trail is included in the Ivanpah 3 area
[c] Gas line will be located under or alongside the paved road

TABLE 6 (REVISED MAY 18, 2009)
Areas of Temporary Disturbance

LINEAR DESCRIPTION	LENGTH (in feet)	ACRES
Gas line 75' construction disturbance from tap to Ivanpah 3, less the 12' dirt service road	2,011	2.9
Gas line corridor between Ivanpah 1 & 2[a]	--	--
Kern River Gas Line tap construction area (200' x 200')	--	0.9
Southwest Gas construction laydown (Area G)[b]	--	5.0
Colosseum Road Improvement (100-ft wide construction corridor from Golf Club to Ivanpah 2, less asphalt road)	8,442	12.4
Water line - 50' construction disturbance less the 12' dirt service road	1,075	--
Main Construction Laydown Area (Areas A)		260.0
Contractor Trailers (Area D)		20.1
Equipment Laydown and Wash Area (Area E)		21.5
Adjustment for Roads[d]		<1.8>
TOTAL TEMPORARY DISTURBANCE		321.0
Existing Transmission Line Corridor[c]		38.9
TOTAL TEMPORARY AND PERMANENT DISTURBANCE		4,072.6

NOTES:
[a] Gas line will be located under or alongside the paved road.
[b] "Areas" are referring to those shown in Attachment DR130-2B, Appendix A, Figure 19.
[c] Included in the Construction Logistics Area
[d] Not all roadways were include in Figure 19. Total roadways = 8.78 acres; amount shown in Fig. 19 was 7.0 acres; therefore, 1.78 acres was double counted in Areas A and D)

TABLE 7 (REVISED MAY 15, 2009)
Acreages[a] of Construction Logistics Area Between Ivanaph 1 and Ivanaph 2 (see Figure 19[b])

Description	Permanent	Temporary
Main Construction Laydown Area (Area A, used for potential equipment & material storage)		260.0
Substation (Area B)	16.1	
Existing Transmission Line Corridor (Area C)		38.9
Contractor Trailers (Area D)		20.1
Equipment Laydown and Wash Area (Area E)		21.5
Administration / Warehouse & Parking (Area F)	8.9	
Southwest Gas Construction Laydown (Area G)		5.0
Paved and dirt roads	7.0	
TOTAL	**32.0**	**345.5**

NOTES:
[a] These acreages do not include any additional area required for stormwater management
[b] "Areas" are referring to those shown in Attachment DR130-2B, Appendix A, Figure 19.

TABLE 8
Areas of Disturbance for Biological Assessment (from north to south)

FACILITY DESCRIPTION	Length (Feet)	Acres
Kern River Gas Line Tap Station (150' x 100')		0.3
Kern River Gas Line Tap Station construction laydown area (200' x 200')		0.9
75-foot-wide Gas Line construction corridor from Tap Station to Ivanpah 3	2,011	3.5
Ivanpah 3		1,836.3
12' trail to access mining claim – new dirt road	1,492	0.4
Ivanpah 2		920.7
Construction Logistics Area		377.5
Colosseum Road Improvement (100-ft wide construction corridor from Golf Club to Ivanpah 2)	8,442	19.4
Ivanpah 1		913.5
TOTAL AFFECTED AREA		**4,072.5**
Less existing trails	33,682	<7.0>
NET AFFECTED AREA		**4,065.5**

ATTACHMENT DR130-2B

Solar Partners I, LLC; Solar Partners II, LLC; Solar Partners VIII, LLC, and Solar Partners IV, LLC

IVANPAH SOLAR ELECTRIC GENERATING SYSTEM

PLAN OF DEVELOPMENT PROJECT DESCRIPTION

ISSUED BY

BRIGHTSOURCE ENERGY

IVAN-DB-024-0001

REVISION 1.3

May 15, 2009

TABLE OF CONTENTS

Page

1.0 INTRODUCTION 1

2.0 PROJECT DESIGN ELEMENTS 2

2.1 HELIOSTAT FIELDS 2
2.2 POWER BLOCK 3
2.2.1 Solar Power Tower and Receiving Boiler *3*
2.2.2 Power Block System *4*
2.3 WATER SUPPLY AND TREATMENT 4
2.4 WASTEWATER MANAGEMENT 4
2.5 UTILITY CORRIDORS 5
2.5.1 Internal Utility Corridors *5*
2.5.2 External Utility Corridor(s) *5*
2.6 ACCESS ROADS AND MAINTENANCE PATHS 8
2.7 REROUTED TRAILS 8
2.8 FIRE PROTECTION SYSTEMS 8
2.9 ADMINISTRATION AND MAINTENANCE COMPLEX 8

3.0 PROJECT PHASES 11

3.1 SCHEDULE 11
3.2 LOW-IMPACT DESIGN PHASE 11
3.2.1 Design Criteria *11*
3.2.2 Site Arrangement/ Project Boundary *12*
3.2.3 Facility Arrangement *14*
3.2.4 Site Development Issues *14*
3.3 PRE-CONSTRUCTION ACTIVITIES 26
3.3.1 Site Survey *26*
3.3.2 Marking and Flagging of Sensitive Areas *26*
3.4 CONSTRUCTION ACTIVITIES 26
3.4.1 Fencing Installation, Clearing, and Grading 26
3.4.2 Power Blocks 27
3.4.3 Support Equipment and Utilities 27
3.5 FACILITIES OPERATION AND MAINTENANCE ACTIVITIES 32
3.5.1 Routine Inspections and Maintenance outside Fenced Areas *32*
3.5.2 Power Block and Solar Fields *34*
3.6 FACILITY DECOMMISSIONING AND CLOSURE ACTIVITIES 35

4.0 REFERENCES 36

LIST OF TABLES

1-1 Area Affected by Ivanpah SEGS
3-1 Project Schedule Major Milestones
3-2 Power Block Equipment List

LIST OF FIGURES

Figure 1 Trails
Figure 2 Tortoise Gates
Figure 3 2008 Biology Survey Area
Figure 4 Low-ground Pressure Flail-type Mower
Figure 5 Concept Pylon Driving Machine
Figure 6 Lightweight Mule Vehicle
Figure 7 Mirror Installation Crane
Figure 8 Mirror Installation Sequence
Figure 9 Conceptual Mirror Washing Machine
Figure 10 Tortoise Barrier Fence
Figure 11 Eldorado Ivanpah Transmission Project Access Roads

APPENDICES

A Civil Engineering Design Drawings
B Geotechnical Engineering Report

ACRONYMS AND ABBREVIATIONS

°C	degrees Celsius
°F	degrees Fahrenheit
AASHTO	American Association of State Highway and Transportation Officials
ACI	American Concrete Institute
AFC	Application for Certification
AI	Asphalt Institute
AISC	American Institute of Steel Construction
ANSI	American National Standards Institute
ASTM	American Society of Testing and Materials
ATV	All Terrain Vehicle
AWWA	American Water Works Association
AWS	American Welding Society
BLM	Bureau of Land Management
BMP	Best Management Practice
BSE	BrightSource Energy
CalOSHA	California Occupational Safety and Health Administration
Caltrans	California Department of Transportation
CBC	California Building Standards Code
CEC	California Energy Commission
CRSI	Concrete Reinforcing Steel Institute
DESCP	Drainage, Erosion, and Sediment Control Plan
EPC	Engineering/Procurement/Construction
FAA	Federal Aviation Administration
FM	Factory Mutual
gpm	gallons per minute
GPS	Global Positioning System
HDPE	high-density polyethylene
KRGT	Kern River Gas Transmission
kV	kilovolt
lbs	pounds
LID	low-impact design
LIDC	Low Impact Development Center
LORS	laws, ordinances, regulations, and standards
MW	megawatt
NAD 83	North American Datum of 1983
NFPA	National Fire Protection Association
NPDES	National Pollutant Discharge Elimination System
NRCS	National Resource Conservation Service (formerly the Soil Conservation Service)
POD	plan of development
psi	pounds per square inch
PVC	polyvinyl chloride
ROW	right-of-way
SCADA	Supervisory Control and Data Acquisition
SCE	Southern California Edison
SEGS	Ivanpah Solar Electric Generating System
SPT	solar power tower

SSPC	Steel Structures Painting Council
STG	steam turbine generator
SWPPP	Stormwater Pollution Prevention Plan
USFWS	U.S. Fish and Wildlife Service

1.0 INTRODUCTION

Solar Partners I, LLC; Solar Partners II, LLC; Solar Partners VIII, LLC, the owners of the three separate solar plant sites, and Solar Partners IV, LLC, the owner of shared facilities required by the three solar plant sites propose to develop a solar facility (together referred to as the Ivanaph Solar Electric Generating System, or Ivanaph SEGS) in the Ivanpah valley about 4.5 miles southwest of Primm, NV. These four companies are Delaware limited liability companies. BrightSource Energy Inc. (BSE), a Delaware corporation, is a technology and development company, and the parent company of the Solar Partners entities.

This project site description has been created to support the solar energy plan of development (POD) for the low-impact design (LID) approach for the Ivanpah Solar Electric Generating System (SEGS). In the *Review of Low Impact Development Policies: Removing Institutional Barriers to Adoption*, the Low Impact Development Center (LIDC) states:

> *The underlying principle of LID is that undeveloped land does not present a stormwater runoff or pollution problem. The evolved natural hydrology of any given site manages water in the most efficient manner. This most often translates to high rates of infiltration, vegetative interception, and evapotranspiration.*
>
> *LID attempts to offset the inevitable consequences of development and changes in land cover by preserving or mimicking natural hydrology. It is a source control option that minimizes stormwater pollution by recognizing that the greatest efficiencies are gained by minimizing stormwater generation. This is a process that begins with functional conservation of watershed resources, reducing impacts of development, and then using innovative management practices to meet the stormwater objective; it is not the use of the management practices alone (LIDC 2007).*

This LID approach focuses on preserving undeveloped land and minimizing stormwater generation.

Ivanpah SEGS will consist of Ivanpah 1 through 3, three independent solar thermal electric generating facilities (or plants) that will be co-located approximately 1.6 miles west of the Ivanpah Dry Lake and 4.5 miles southwest of Primm, Nevada, in San Bernardino County, California. The project site will be located on federal property managed by the Bureau of Land Management (BLM). The three Ivanpah SEGS facilities will have a combined net rating of approximately 400 megawatt (MW). The SEGS will be constructed in three phases: Ivanpah 1 (nominal 100 MW), Ivanpah 2 (nominal 100 MW), and Ivanpah 3 (nominal 200 MW) (see Appendix A, Figure 1).

The total Ivanpah SEGS project area would affect approximately 4,072.5 acres (Table 1-1). Ivanpah 1 will require about 913.5 acres (1.43 square miles) and Ivanpah 2 will require about 920.7 acres (1.44 square miles), while Ivanpah 3 is larger and will require approximately 1,836.3 acres (2.9 square miles). The project boundary for Ivanpah 1, 2, and 3 will cover a total of 3,670.5 acres (5.7 square miles). Additionally, there will be a common area between Ivanpah 1 and 2 (approximately 377.5 acres) that will include the Southern California Edison (SCE) substation and shared facilities (administration/storage building, groundwater production wells, and portions of the linear facilities). Portions of this common area will be used during construction for staging, laydown, and temporary offices. Additionally, approximately 24.5 acres

TABLE 1-1
Area Affected by Ivanpah SEGS

FACILITY DESCRIPTION	Length (Feet)	Acres
Ivanpah 1		913.5
Ivanpah 2		920.7
Ivanpah 3		1,836.3
Construction Logistics Area		377.5
Kern River Gas Line Tap Station (150' x 100')		0.3
Kern River Gas Line Tap Station construction laydown area (200' x 200')		0.9
75-foot-wide Gas Line construction corridor from Tap Station to Ivanpah 3	2,011	3.5
12' trail to access mining claim – new dirt road	1,492	0.4
Colosseum Road Improvement (100-foot-wide construction corridor from Golf Club to Ivanpah 2)	8,442	19.4
TOTAL AFFECTED AREA		**4,072.5**

will be used for construction of the gas line tap station, construction of the gas line, construction of a dirt road to the mining claim, and paving of a portion of Colosseum Road from the Primm Valley Golf Club to the project.

2.0 PROJECT DESIGN ELEMENTS

This section describes the elements associated with the proposed project design, including the heliostat (mirror) fields, the power block, water supply and treatment, wastewater management, shared utility corridors, substation and switchyard, networks of access roads and maintenance paths, fire protection systems, and an administration and maintenance complex.

Each of the three proposed solar plants will consist of heliostat fields surrounding a power block, which is supplied with the necessary utilities through a utility corridor (see Appendix A, Figures 2 and 21). Each of the solar plants will be connected to SCE's planned step-up substation, which will in turn tie into SCE's electric-power transmission network (or grid) through an existing (115-kilovolt [kV]) transmission line that runs across the project area. Each of the design elements are described below.

2.1 HELIOSTAT FIELDS

The 100-MW plants (Ivanpah 1 and 2) will each have heliostat arrays consisting of up to 55,000 heliostats.[1] The 200-MW plant (Ivanpah 3) will have heliostat arrays consisting of up to 104,000 heliostats.[2] The heliostat arrays would be arranged around a single centralized solar

[1] However, the power purchase agreement states that both Ivanpah 1 and 2 would have no more than 70,000 heliostats.
[2] However, the power purchase agreement states that Ivanpah 3 would have no more than 140,000 heliostats.

power tower (SPT). The heliostats would automatically track the sun during the day and reflect the solar energy to the boiler on top of the SPT.

Each heliostat is 7.2 feet high by 10.5 feet wide (2.20 meters by 3.20 meters) yielding a reflecting surface of 75.6 square feet (7.04 square meters). Each heliostat consists of two mirrors mounted on a single pylon, along with a computer-programmed aiming control system that directs the motion of the heliostat to track the movement of the sun. Communication cables connecting the heliostats between one another will be strung aboveground.

The aiming control system and the layout of solar fields are optimally designed to focus sunlight on to the SPT in a manner that maximizes steam output. The aiming control system uses optimization software to instruct the solar field controller where each heliostat should aim to maximize solar energy collection and output. This patent-pending software system accounts for the light flux intensity and distribution required for the SPT boiler, and various other conditions such as sun radiation, wind, air pressure, and the number of heliostats available for tracking. When computing the optimal aiming policy, the aiming control system factors in the differences between heliostats with respect to their tracking accuracy, the intensity of the beam they reflect (both of these factors depend mainly on the distance to the receiver), the shape of the beam, and other relevant aspects. The optimization software will also prevent the mirrors from being aimed toward the freeway or the golf club at an angle that would reflect sunlight near the ground surface.

2.2 POWER BLOCK

Each solar power plant (Ivanpah 1 through 3) will have a power block located in the approximate center of the heliostat array. The power block will include an SPT, a receiver boiler, a steam turbine generator (STG) set, air-cooled condensers, and other auxiliary systems. This section describes the SPTs and receiving boilers, and the power block systems to be installed in each plant. (See Appendix A, Figure 17 for the power block layout of Ivanpah 1).

2.2.1 Solar Power Tower and Receiving Boiler

The SPT is a metal structure designed specifically to support the boiler and efficiently move high-quality steam through a STG at its base. The SPT (i.e., the support structure) would be about 120 meters high (approximately 393 feet). The receiving boiler (which sits on top of the support structure) would be 20 meters tall (approximately 66 feet) including the added height for upper steam drum and protective ceramic insulation panels. Overall, the tower height would be 140 meters (approximately 459 feet). Additionally, a Federal Aviation Administration (FAA)-required lighting and a lightening pole will extend above the top of the towers approximately 5 to 10 feet. The height of the SPT allows heliostats from significant distances to accurately reflect sunlight to the receiving boiler. The receiving boiler is a traditional high-efficiency boiler positioned on top of the SPT. The boiler converts the concentrated energy of the sun reflected from the heliostats into superheated steam. The boilers will be supplied by conventional boiler manufacturers providing performance warranties and industry best practices, and will comply with standard boiler design parameters. The boiler's tubes are coated with a material that maximizes energy absorbance. The boiler has steam generation, superheating, and reheating sections and is designed to generate superheated steam at a pressure of 160 bars and a temperature of 550 degrees Celsius (°C).

2.2.2 Power Block System

The power block system proposed for this project is the same as that used in traditional power-generation facilities to convert steam to electricity. The power block consists of a conventional Rankin-cycle STG with a reheat cycle, and auxiliary functions of heat rejection, water treatment, water disposal, and grid interconnection capabilities. The integration of high-efficiency pre-existing turbine technologies provides performance warranties and enables the system to maximize thermal-to-electricity efficiencies. To minimize water use, air (rather than water) will be used to cool the steam.

Each plant's power cycle will be based on a Rankin-cycle turbine with two pressure stage casings. Live superheated steam will enter the high-pressure turbine casing at 160 bars and 540°C (approximately 1,004°F). The steam leaves the high-pressure casing via two extractions to high-pressure preheaters and is then exhausted to a reheat circuit. In the reheat circuit, the steam is heated in a solar reheater (similar to the solar boiler superheater) located in the power block at the top of a SPT adjacent to the STG. The reheated steam enters an intermediate pressure turbine casing at 35 bars and 480°C (approximately 896°F). It leaves the intermediate pressure casing via two extractions: one to a deaerator and one to a preheater and exhaust steam at 11 bars is condensed in an air-cooled condenser.

The condensate is sent from the condenser well through three low-pressure preheaters to the deaerator, which also provides feedwater reserve storage and is the point of feedwater make-up injection. From the deaerator, high-pressure feedwater pumps send feedwater through two high-pressure preheaters out to the solar field boilers.

Each plant will have a backup diesel generator to provide power to operate boiler recirculation pumps, firewater pumps, and other small consumers in the event of an emergency when power might otherwise be unavailable.

2.3 WATER SUPPLY AND TREATMENT

Two new groundwater production wells will be drilled and developed to provide raw water for the Ivanpah SEGS project. The two wells will be located near the northwest corner of Ivanpah 1 (Appendix A, Figure 21). The wells, and their respective pumping systems, will be sized for 100-percent redundancy. Groundwater will be used to supply domestic and industrial water needs. These wells are anticipated to supply water to all three plants to be used as make-up water.

Make-up water for the steam system will be treated by means of a mixed-bed ion-exchange system to produce feedwater-quality water for use in the boiler system. The ion exchange resigns will be sent offsite for regeneration. Drinking water will either be brought onsite or a small filter/purification system would be used to provide potable water for sanitary uses (sinks, showers, and toilets) within the plants.

2.4 WASTEWATER MANAGEMENT

A package treatment plant will be used at the administration and maintenance complex to treat wastewater. Portable toilets will be placed in the power block areas of each the three solar

facilities. Portable toilets will be serviced by a waste management firm on a regular basis, depending on the number of toilets and staff at each facility.

2.5 UTILITY CORRIDORS

Due to the size of the facilities, it will be necessary to route several utilities between the individual facilities (internal utility corridors) and the combined facilities (external utility corridors). This section describes the utility corridors—specifically, the internal and external utility corridors, electrical transmission system, natural gas system, and water supply system—and how they will function at each SEGS plant (see Appendix A, Figure 21).

2.5.1 Internal Utility Corridors

Within each SEGS facility there will be a utility corridor required for the overhead electrical lines and fiber-optic cables from the switchyard to the SCE substation. Additionally, an underground utility corridor will contain water and natural gas lines. These underground corridors will run parallel to the local access roads between the facilities and the common area.

The two groundwater production wells will be located northwest of Ivanpah 1. These wells will be connected via an approximately 1,075-foot-long underground water line to the main trunk line going to the administration/warehouse building, and then from there to Ivanpah 1, 2, and 3.

The internal electrical transmission interconnections will link each plant to the power grid by connecting the plant switchyard to the new SCE substation (Ivanpah substation). The substation will be located between Ivanpah 1 and Ivanpah 2 on the north side of the existing transmission corridor.

2.5.2 External Utility Corridor(s)

External to the SEGS project, utilities including natural gas pipelines, telecommunications, and transmission lines will require upgrades or new construction. These utilities will either provide services to the facilities (natural gas pipeline and telecommunications), or transmit the electrical energy generated at the facilities (transmission lines). Appendix A, Figure 21 shows the location of these external utilities. This section provides additional detail about them.

Electrical Transmission and Telecommunication Systems

Gen-tie Lines

Ivanpah 1, 2, and 3 would be interconnected to an existing SCE grid through an upgraded SCE 115-kV line passing between Ivanpah 1 and 2 on a northeast-southwest utility corridor. SCE will upgrade the existing 115-kV transmission line between the new Ivanpah substation and the El Dorado substation to 220 kV. This SCE upgrade is designed to serve other projects planned in the general vicinity and is not being built specifically for the Ivanpah SEGS project. It will provide sufficient capacity for the Ivanpah SEGS project and other projects anticipated by SCE. A substation will be constructed between Ivanpah 1 and 2 that will be used to connect the Ivanpah SEGS to the electrical grid.

The 115-kV transmission generation tie line (gen-tie line) from the edge of the Ivanpah 1 solar field to the substation would be approximately 2,870 feet long. The Ivanpah 2 and 3 gen-tie lines extend approximately 2,300 feet and 12,760 feet, respectively, from their switchyards before coming together. The combined gen-tie line (double-circuit) would then extend approximately 1,900 feet from the southern end of Ivanpah 2 to the substation. There would be a 12-foot-wide dirt service road running alongside the gen-tie lines.

Each circuit would be supported by single-pole structure at appropriate intervals with final heights as determined during detailed design. The shared gen-tie line for Ivanpah 2 and 3 would be carried on a double-circuit pole. The lines would be insulated from the poles using porcelain insulators.

Substation and Switchyard

Ivanpah 1, 2, and 3 would be interconnected to the existing SCE grid through an upgraded El Dorado– Baker–Coolwater-Dunn Siding-Mountain Pass 115-kV line passing between Ivanpah 1 and 2 on a northeast-southwest utility corridor. A 115/220-kV substation would be constructed between Ivanpah 1 and 2 that would be used to connect the Ivanpah SEGS to the electrical grid. The approximate location of the substation is shown in Appendix A, Figures 2 and 3. The substation dimensions would be about 830 feet wide by 850 feet long—approximately 16.1 acres. Additionally, a 24-foot-wide asphalt road about 1,760 feet long will be needed to connect the substation to the re-routed Colosseum Road (on the south side of Ivanpah 2).

Telecommunication Line

The proposed Ivanpah substation would also require new telecommunication infrastructure to be installed to provide protective relay circuit, Supervisory Control and Data Acquisition (SCADA) circuit, data, and telephone services. The telecommunication path from Ivanpah substation to local carrier facility interface in the Mountain Pass area consists of approximately 8 miles of fiber-optic cable to be installed overhead on existing poles and new underground conduits to be constructed in the substation and telecom carrier interface point. This fiber-optic route consists of two segments. The first segment is from Ivanpah substation to Mountain Pass substation using the existing Nipton 33-kV distribution line poles built along the transmission line corridor that crosses between Ivanpah 1 and 2. The second segment would be from Mountain Pass substation to the telecommunications facility approximately 1.5 miles away at an interface point to be designated by the local telecommunication carrier. The fiber-optic cable would be installed on the existing Earth 12-kV distribution line poles.

Natural Gas System

Natural gas would be used as a supplementary fuel for project operation. Each phase of the project includes a small package natural gas-fired start-up boiler to provide heat for solar plant start-up and during temporary cloud cover. Natural gas would be obtained by the construction of a new 6-mile-long, 4- to 6-inch distribution pipeline from the existing Kern River Gas Transmission (KRGT) pipeline located approximately 0.5 mile north of the Ivanpah 3 site (Appendix A, Figure 20). A permanent gas metering station (100 feet by 150 feet) and a temporary construction area (200 feet by 200 feet) would be located at the point of connection. From the tap station, the natural gas line would run south along the western edge of Ivanpah 3 to a metering station (10 feet by 40 feet) near its southeast corner. Although the gas line and

metering station would be within the area that was surveyed, they would be located outside the project's fenced heliostat fields and a dirt access road would follow the pipeline so that the gas company has access to it for maintenance.

From the metering station at Ivanpah 3, the gas line would continue along the eastern edge of Ivanpah 2 to another metering station (20 feet by 40 feet) outside the southeast corner of Ivanpah 2 (see Appendix A, Figure 3) west of Colosseum Road, that would serve Ivanapah 1 and 2. Again, the gas line and metering station would be located within the project area, but outside the fenced heliostat field. From that metering station, the gas line to Ivanpah 1 would be located alongside or under the 30-foot-wide paved access road that goes from Colosseum Road past the administration/warehouse building to Ivanpah 1's power block.

A gas-metering station would be required at the KRGT tap point to measure and record gas volumes. Additionally, facilities would be installed to regulate the gas pressure and to remove any liquids or solid particles. Construction activities related to the metering station and metering sets would include grading a pad and installing above- and below-ground gas piping, metering equipment, gas conditioning, pressure regulation, and pigging facilities. Either a distribution line or photovoltaic cells and batteries would be used for metering station operation lighting and communication equipment. Perimeter chain-link fencing for security would also be installed.

Gas line pigging facilities would be sited at the gas line tap station. Periodic gas line pigging is required to remove liquids and debris within the pipeline, which improves gas flow. Also, inspection pigs would be used to monitor the pipeline integrity to ensure the pipeline is in proper working order. With routine maintenance, the gas lines will run more efficiently and will minimize product losses during launch and capture.

Water Supply System

Water Supply Wells

The combined 400-MW capacity of the three plants would require up to 46 gallons per minute (gpm) of raw water from the groundwater production wells. Water will be distributed to the plants via underground high-density polyethylene (HDPE) or polyvinyl chloride (PVC) pipe. Each power block will contain a 250,000-gallon raw water tank. A portion of the raw water stored in the tank (about 100,000 gallons) will be designated for plant use, while the majority would be reserved for fire water.

There would be a 12-foot-wide dirt access road leading to the groundwater production wells. The water supply line would go from the wells along the dirt access road to the paved road on the northwest corner of Ivanpah 1 where it would connect to the water main. The water main would run north to the administration and maintenance complex, Ivanpah 2, and Ivanpah 3 along the same corridor as the gas line and south to Ivanpah 1 along the paved access road leading to the power block. This new water distribution line would be approximately 1,075 feet long from the wells to the main line going to each of the plants.

Monitoring Well

A monitoring well would be installed southeast of the administration and maintenance complex near the northwest corner of Ivanpah 1 (Appendix A, Figure 21). The permanent area required

for the installation of the monitoring well (10 feet x 10 feet) and access to it via an 866-foot long, 8-foot wide dirt road is 0.16 acre.

2.6 ACCESS ROADS AND MAINTENANCE PATHS

Project access would be from Colosseum Road to the project entrance road (Appendix A, Figure 2). Colosseum Road is an existing dirt road, which will be paved (30 feet wide, two lanes) for a 1.9-mile length from the Primm Valley Golf Club to the project site.[3] The project would re-route a portion of Colosseum Road around the southern end of the Ivanpah 2 plant site for a distance of 1.2 miles, which will also be a 30-foot paved, two-lane road, then continue as a 12-foot-wide dirt or gravel road for approximately 2,432 feet to connect to the point where the existing Colosseum dirt road would exit the Ivanpah 2 site boundary (Appendix A, Figure 19). Additionally, paved access roads would be created to access the power blocks of the three Ivanpah plant sites within the fenced solar sites.

Within the heliostat fields, paths will be located concentrically around the power block (or in the case of Ivanpah 3, around the power towers) to provide access to the heliostat mirrors for maintenance and cleaning. The paths will be located between every other row of heliostats and will not be graded. There also will be a maintenance path on the inside perimeter of the project boundary fence. These paths will be used for plant security and to monitor and maintain the perimeter and tortoise fencing.

Additionally, dirt roads will be installed diagonally through the heliostat fields and used for access to the heliostat maintenance paths. These dirt roads will follow existing topography.

2.7 REROUTED TRAILS

Existing dirt trails that traverse the site will be re-routed, either around the project site or to a proposed paved access road. Each re-routed dirt trail will be 8 to 12 feet wide (to match the existing trail) and will be reconnected to the original dirt trail on the other side of the project site (Figure 1). Permanent tortoise gates will be installed to prevent tortoises from entering internal roads (Figure 2).

2.8 FIRE PROTECTION SYSTEMS

A fire protection system will be installed that meets the approval of the San Bernardino County Fire Marshal. Each power block will have 150,000 gallons of water in the raw water tank dedicated to fire suppression.

2.9 ADMINISTRATION AND MAINTENANCE COMPLEX

An administration, warehouse, and maintenance complex would be located between the relocated Colosseum Road and the entrance to the Ivanpah 1 solar plant. It would include parking and landscape areas. The complex would require about 8.9 acres and would be served by power from the Ivanpah substation, water from the water supply wells, and gas from the main gas trunk line running from the KRGT line to the Ivanpah 1 power block. A package treatment

[3] A portion of this road has recently been paved from the golf club to its wells, but likely lacks a sufficient road base.

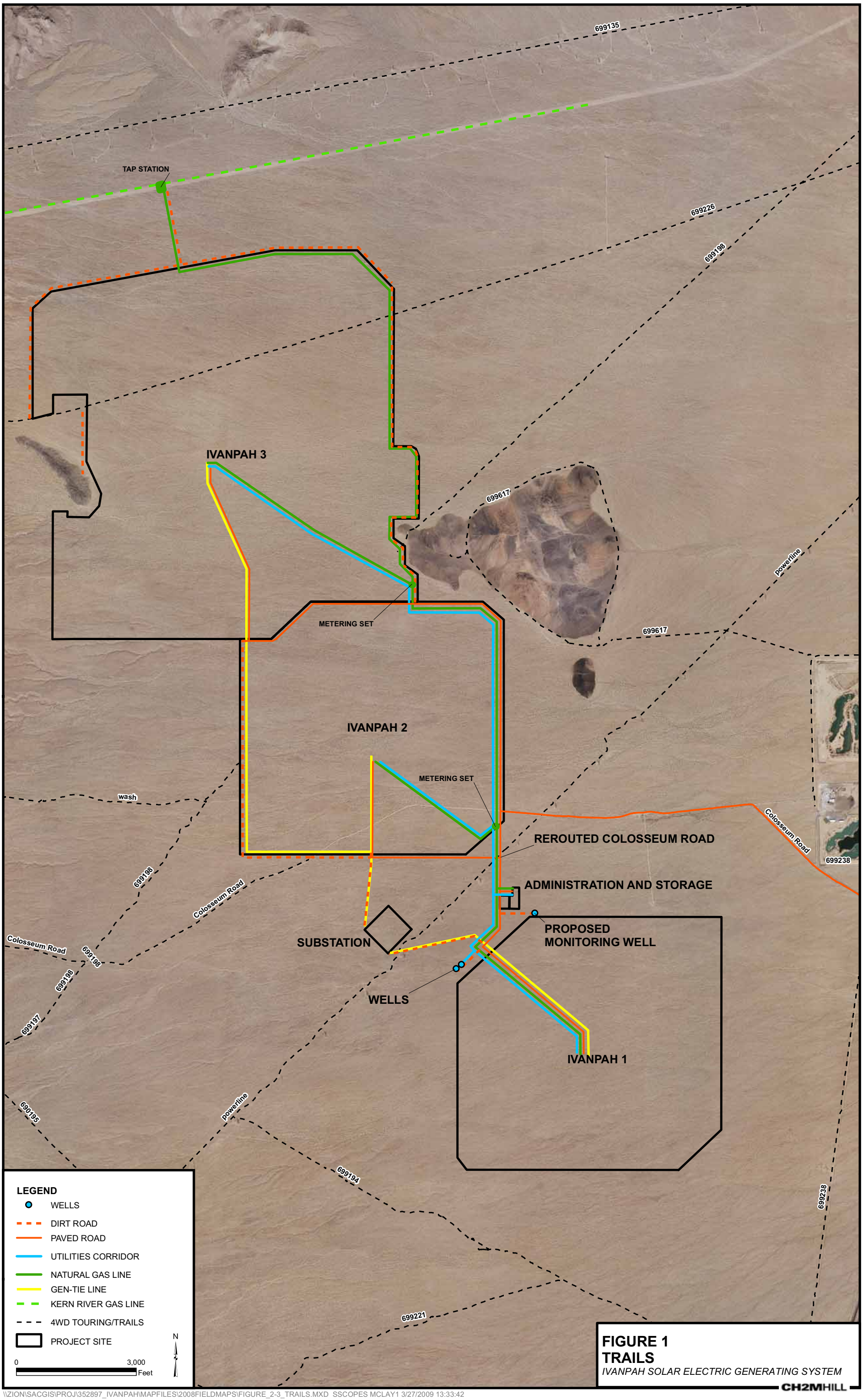

FIGURE 1
TRAILS
IVANPAH SOLAR ELECTRIC GENERATING SYSTEM

CH2MHILL

\\ZION\SACGIS\PROJ\352897_IVANPAH\MAPFILES\2008FIELDMAPS\FIGURE_2-3_TRAILS.MXD SSCOPES MCLAY1 3/27/2009 13:33:42

CROSS SECTION

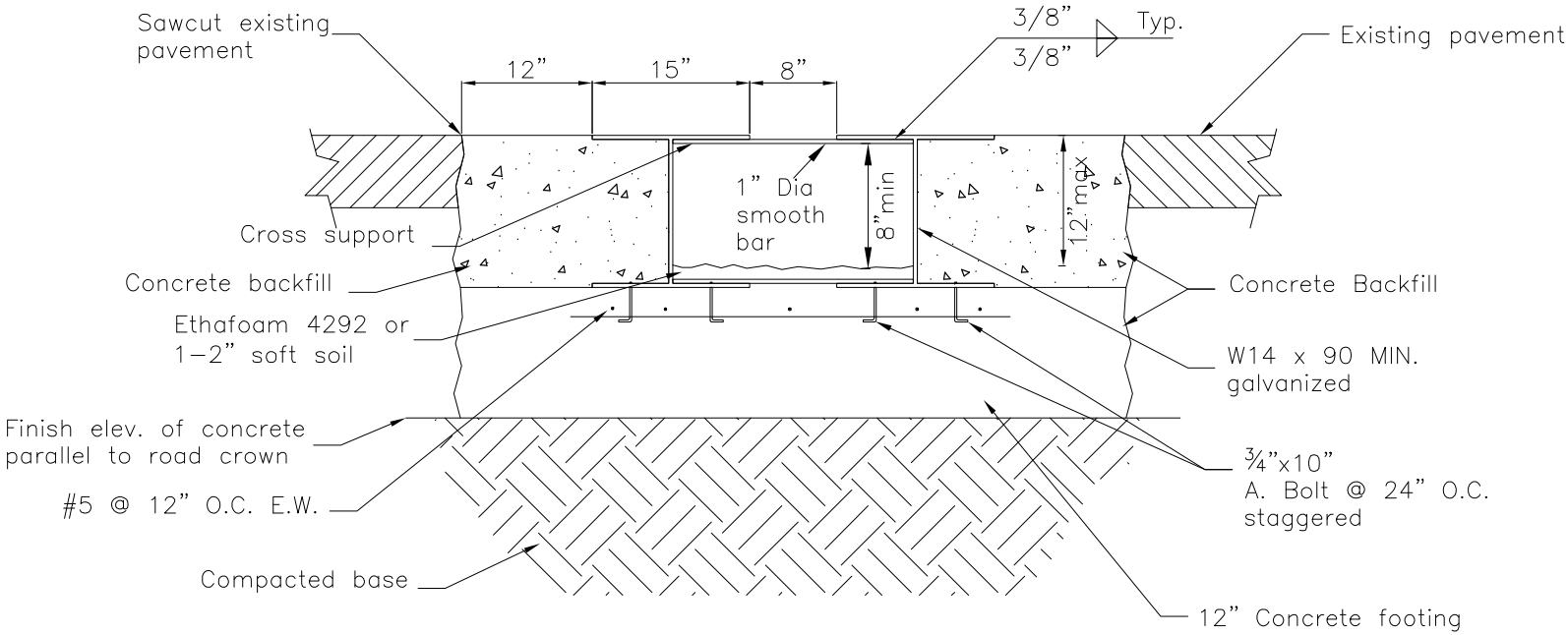

TOP VIEW

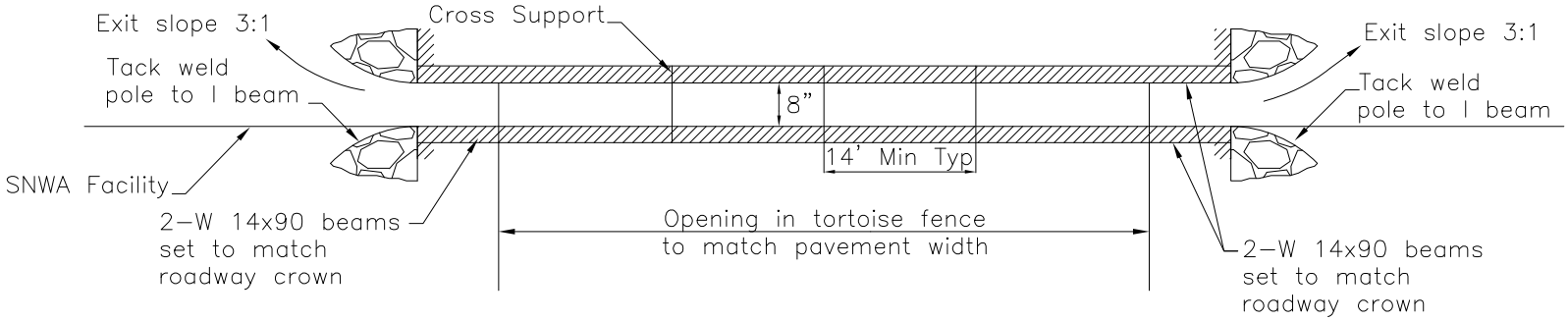

NOTE:
All metal should be galvanized per spec 05500, paragraph 3.3

FIGURE 2
PERMANENT TORTOISE GUARD
IVANPAH SOLAR ELECTRIC GENERATING SYSTEM

CH2MHILL

ES062007009SAC Figure_2.ai 05.01.09 tdaus

plant would be used to treat sanitary waste. The package treatment system would have a small wastewater stream that would be treated and used for landscape irrigation.

3.0 PROJECT PHASES

This section describes the schedule and the following phases of the Ivanpah SEGS project: LID design, preconstruction, construction, facility operations and maintenance, and facility decommissioning and closure activities.

3.1 SCHEDULE

After the California Energy Commission (CEC) license and BLM right-of-way (ROW) grant have been issued, the proposed project will be constructed in three phases. Construction is anticipated to be performed in the following order: (1) the Construction Logistics Area; (2) Ivanpah 1 (the southernmost site) and other shared facilities; (3) Ivanpah 2 (the middle site); and (4) Ivanpah 3 (the 200-MW plant on the north). However, given that the three plants will receive separate, independent licensing approvals, it is possible that the order of construction may change. The shared facilities will be constructed in connection with the first plant construction, whether it is Ivanpah 1, 2, or 3.Construction is planned to take place over approximately 48 months, from the first quarter of 2010 to the fourth quarter 2013. Commercial operations are expected to commence in 2011 at Ivanpah 1, in 2012 at Ivanpah 2, and in 2013 at Ivanpah 3. Major milestones are listed in Table 3-1.

TABLE 3-1
Project Schedule Major Milestones

Activity	Date
Begin Construction	First Quarter 2010
Ivanpah 1 Commercial Operation	Fourth Quarter 2011
Ivanpah 2 Commercial Operation	Fourth Quarter 2012
Ivanpah 3 Commercial Operation	Fourth Quarter 2013

3.2 LOW-IMPACT DESIGN PHASE

The LID design establishes the arrangement of the SEGS facilities and layout of the site's associated roadways, infrastructure, and stormwater management systems.

3.2.1 Design Criteria

The following codes, standards, and references apply to the civil engineering and design work performed on the Ivanpah SEGS Project. Unless noted otherwise, the latest edition and published addenda shall apply. In the event of any conflicts between codes, or between specifications and codes, the more stringent regulation will apply.

- California Stormwater Best Management Practices (BMPs) Construction Handbook for New Development and Redevelopment (California Stormwater Quality Association, 2003)

- Geotechnical Engineering Report of Solar Power Plant, Ivanpah Valley, San Bernardino County, California (Terracon, 2007).
- The Effect of Roads, Barrier Fences, and Culverts on Desert Tortoise Populations in California, USA (New York Turtle and Tortoise Society, 1997).

Additional Civil Engineering Standards and Codes that are considered to be applicable (in whole or in part) to civil engineering design and construction of power plants include:

- American Association of State Highway and Transportation Officials (AASHTO)—Standards and Specifications
- American Concrete Institute (ACI) - Standards and Recommended Practices, including ACI
- American Institute of Steel Construction (AISC) - Standards and Specifications
- American National Standards Institute (ANSI) - Standards
- American Society of Testing and Materials (ASTM) - Standards, Specifications, and Recommended Practices
- American Water Works Association (AWWA) - Standards and Specifications
- American Welding Society (AWS) - Codes and Standards
- Asphalt Institute (AI) - Asphalt Handbook
- State of California Department of Transportation (Caltrans) Standard Specification
- California Energy Commission - Recommended Seismic Design Criteria for Non-Nuclear Generating Facilities in California (CEC, 1989)
- Concrete Reinforcing Steel Institute (CRSI) – Standards
- Factory Mutual (FM) - Standards
- National Fire Protection Association (NFPA) - Standards
- California Building Standards Code (CBC, 2007)
- Steel Structures Painting Council (SSPC) - Standards and Specifications

3.2.2 Site Arrangement/ Project Boundary

This section describes the site arrangement/project boundaries, facility arrangement, and site development issues anticipated for the Ivanpah SEGS project.

Site Project Base Map and Coordinates

Figure 3 shows the boundary for the SEGS project that was surveyed for potential biological and cultural impacts. Appendix A, Figure 20 provides coordinates for project features. Survey data and groundwater well coordinates have been provided by CH2M HILL and verified by CH2M HILL and BSE. All coordinates were provided in the North American Datum of 1983 (NAD 83) coordinate system. The power blocks and associated heliostat arrangements were provided by BSE.

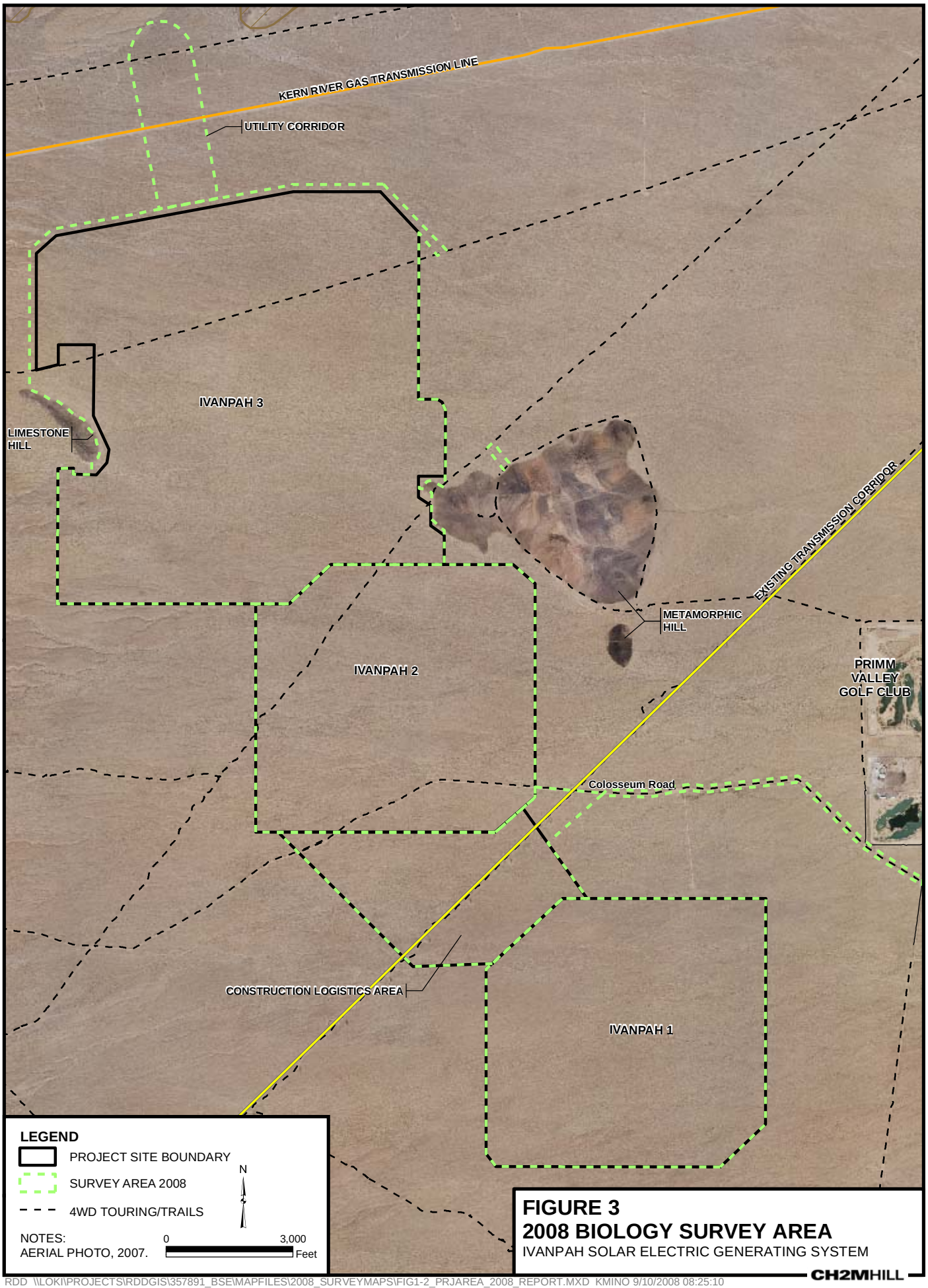

FIGURE 3
2008 BIOLOGY SURVEY AREA
IVANPAH SOLAR ELECTRIC GENERATING SYSTEM

CH2MHILL

RDD \\LOKI\PROJECTS\RDDGIS\357891_BSE\MAPFILES\2008_SURVEYMAPS\FIG1-2_PRJAREA_2008_REPORT.MXD KMINO 9/10/2008 08:25:10

3.2.3 Facility Arrangement

The Ivanpah SEGS project team, consisting of BSE, CH2M HILL, Sierra Research, WorleyParsons, and Tetra Tech EM Inc., designed the arrangement of equipment in each facility.

The POD civil engineering design drawings for the Ivanpah SEGS project, designed to reflect the LID, are provided in Appendix A.

3.2.4 Site Development Issues

This section describes the site-specific requirements and design parameters used to develop engineering solutions for the major site development issues potentially encountered at the Ivanpah SEGS project site. For each development issue, the applicable or relevant and appropriate regulatory requirements, applicable industry and quality standards, and the corresponding design bases are presented. Each design basis includes BSE's design requirements for the SEGS project.

Geotechnical

All geotechnical information is outlined in the Geotechnical Engineering Report for Solar Power Plant, Ivanpah Valley; San Bernardino County, California (Terracon, 2007) (provided as Appendix B). BSE is in the process of permitting additional geotechnical work need for final design of the project.

Natural Vegetation

The site's natural vegetation is to remain in place and undisturbed in the area of each facility where land-disturbing activities are not required for access of installation equipment and materials. Drawings in Appendix A show areas where grading and other disturbances would occur.

Clearing

The estimated size of each area (in round numbers) is as follows: 914 acres for Ivanpah 1; 921 acres for Ivanpah 2; and 1,836 acres for Ivanpah 3. To construct the heliostat array fields located within these sites, some vegetation clearing would occur. In areas where general site grading is not required for equipment access and stormwater management, vegetation clearing would not be performed.

Vegetation clearing (but not leveling or grading) will be performed in areas throughout the site where the existing terrain will not permit access of installation equipment and materials. Outside of access roads and maintenance tracks, vegetation will be cut to a height that allows clearance for heliostat function and leaves the root structures intact. The vegetation will be cut with a flail-type mower mounted on skids that will be mounted on a low-ground pressure tractor (approximately 4.2 pounds per square inch [psi]). Figure 4 below shows equipment of the type that may be used.

Clearing the site of vegetation is to be performed in areas where the existing terrain will permit access for installation equipment and materials throughout the site during construction (without

the need of leveling or grading). Vegetation is to be cut to an elevation that allows clearance for heliostat function and leaves the root structures intact. Occasional cutting of the vegetation may be required to control plant regrowth that could affect heliostat mirror movement. Where existing site topography is favorable, the natural drainage features will be maintained (see drawings in Appendix A).

Clearing and Grubbing

Clearing and grubbing, where shrubs including roots are removed, is to be performed for permanent access roads for each facility, the power blocks, and in common areas where the existing topography requires modification to provide access for installation equipment and materials during construction (areas requiring leveling or grading). Elsewhere, existing root systems would remain in place to anchor the soil, reducing the potential for erosion. Where existing site topography is favorable, the natural drainage features will be maintained. See drawings in Appendix A.

Figure 4 –Low-ground Pressure Flail-type Mower

General Grading and Leveling

Using the LID design approach, grading in the heliostat field will be minimized and only performed for areas of limited access and staging during construction. Crossing of existing washes will be achieved by the proper equipment selected and/or designed for the project.

Occasional vegetation cutting may be required to control plant regrowth that could affect mirror movement

Equipment selection will consider the following:

- Maximum slope capabilities
- Wheel base
- Width of footprint
- Weight of equipment and ground pressure exerted

At some washes, slopes may be too steep for equipment, and cuts into the side of the existing embankments may be necessary (a detail is provided on drawings in Appendix A). Surface rocks and boulders may be relocated to allow proper installation of heliostats and facilities. These rocks and boulders will be harvested using LID construction techniques to minimize any necessary clearing or grading. Boulders will be harvested using a Caterpillar 950 (gross vehicle weight of 40,000 pounds [lbs] or similar), front-end wheel loaded with high floatation tires. The tires will generate much less impact than standard Caterpillar tires. The loader will be equipped with a skeleton bucket to harvest rocks larger than about 10 or 12 inches in diameter.

The highest concentration of large rocks occurs in the northeastern 170-acre area of Ivanpah 3. These rocks and boulders will be used for rip-rap and other uses where possible. Site grading will be designed to maintain all local materials onsite and attempt to minimize the import of offsite material. The import of suitable stone aggregate or rip-rap may be required if not available onsite given the limited excavation planned. To the extent possible, the site's excavation and embankment volumes will be approximately balanced in an effort to eliminate or minize the import of material to the site.

An area of light grading for equipment access and boulder clearing, including rock harvesting, is anticipated in Ivanpah 3. In this area, there may be up to 135,000 cubic yards of material graded and rock harvested. These areas of light grading will not be compacted to optimum moisture content; rather, compaction efforts will attempt to attain natural compaction to allow existing infiltration rates.

Heavy to medium grading will be performed within the solar project's proposed receiver tower and power block areas, for the substation, and in the administration/maintenance building area. In each of these individual areas, BSE will approximately balance earthwork cuts and fills. The total quantity of cut anticipated for these areas is approximately 245,000 cubic yards. Most earthwork in the power block and common areas will be excavated and compacted with Caterpillar D-9 size bulldozers and sheepsfoot compactors. These areas will be compacted to the recommendations of the geotechnical report.

The surface soil grade of each facility will be designed to provide the minimum requirements for access of installation equipment and materials during site construction and operations. Most of the natural drainage features will be maintained and any grading required will be designed to promote sheet flow where possible.

Areas disturbed by grading will be hydro-mulched, (or as specified in the revised Closure, Revegetation, and Rehabilitation Plan [CH2M HILL, 2009]), and/or protected by other means to mitigate erosion using BMPs.

Grade is to be designed to provide positive drainage of rainfall runoff away from each structure. The drawings in Appendix A provide additional clarity regarding typical areas of disturbance within the heliostat array fields. The total graded area is estimated to be approximately 600 acres.

Excavations

Slopes

Embankments and excavated areas shall have the following slopes:

- Permanent embankments and excavations: 3 horizontal to 1 vertical (3:1) or flatter.
- Temporary embankments and excavations: In accordance with California's Occupational Safety and Health Administration (CalOSHA) requirements for excavation.

Temporary Slope Protection

Slopes of excavated areas may be hydro-mulched (or as specified in the revised Closure, Revegetation and Rehabilitation Plan) to help eliminate and protect soils from rutting and scouring. Surface water will not be permitted to flow uncontrolled down any embankment slope.

Where grade surface is flat or rises from the edge of an excavation, the top of the excavated slope will be protected by a low berm that will extend to a point at each end where the grade has a positive slope away from the excavation. The stormwater runoff discharge from this protective system will be directed to the edge of the excavation to prevent edge and slope scour.

Where job conditions require the temporary use of excavated slopes steeper than listed above, the cutting of such slopes and protective means employed will maintain the stability of the slopes in accordance with federal OSHA Part 1926, Subpart P.

Slopes of embankments will be protected against rutting and scouring during construction in a manner similar to that required for excavated slopes.

Disposition of Excavated Materials

Reusable local materials will be hauled to lay-down areas for reuse or placed directly in the fill or backfill locations. A stone crusher facility may be used on site for the production of sub-grade materials (gravel) from local stone. Stockpiles of local materials shall be neatly shaped and free to drain.

Material that do not meet the requirements for fill, backfill, or sub-grade shall be disposed of on site in locations designated by BSE.

Requirements for Fill and Backfill

Fill and backfill material will be compacted to the requirements of the project geotechnical report.

Hydrology

Hydrology calculations will be performed using methods that, at a minimum, adhere to the Soil Conservation Service (now National Resource Conservation Service, NRCS) publication TR-55 (1986). Calculations will determine the amount of pre- and post-development stormwater run-on and run-off for each basin or sub-basin within each facility.

San Bernardino County and Clark County (Nevada) requirements will be used (where applicable) to classify soil characteristics, expected soil types, and other design criteria necessary for use with the TR-55 calculations. Offsite flows will be determined using the western watershed boundaries from available state watershed information (Appendix A, Figure 8), contour intervals, and available soil mapping information. Watersheds will be further broken down into sub-basins as required to determine the western flow from the ephemeral washes upslope of the Ivanpah SEGS project areas. This process is necessary to determine the offsite flow required to design the bypass channels through the developed Ivanpah SEGS site.

Storm Drainage System

Most of the project site will maintain the original grades and natural drainage features and, therefore, will require no added storm drainage control. In limited areas, such as the power blocks and administrative areas, a storm drainage system will be designed using diversions channels, bypass channels, or swales to direct run-on flow from up-slope areas, and run-off flow through and around each facility. The design will be developed for sheet flow for all storm events less than or equal to a 100-year, 24-hour storm event.

The stormwater drainage system will be designed by using the TR-55 method and by determining the amount of rainfall during a specific rainfall storm event. This method is in accordance with requirements specified in the most current version of San Bernardino and Clark County requirements.

All surface runoff during and after construction will be controlled in accordance with the requirements of the National Pollutant Discharge Elimination System (NPDES) Construction Runoff Permit, the requirements of the San Bernardino Water Quality Management Plan manual, and all other applicable laws, ordinances, regulations, and standards.

Diversion channels will be designed so that a minimum ground surface slope of 0.5 percent shall be provided to allow positive, puddle-free drainage.

To reduce erosion, storm drainage channels may be lined with a non-erodible material such as compacted rip-rap, geo-synthetic matting, or engineered vegetation.

Heliostats

The heliostats are installed in two steps. Initially, the support pylons are installed using a sonic (vibratory) technology, and then the mirrors and aiming system are mounted to the pylon. The vibratory installation allows the 6-inch-diameter pylons to be embedded in the ground without the use of conventional drilling techniques, or generation of drill cuttings. For this LID, most of the project site will maintain the original grades and natural drainage features, and, therefore, construction will require machines that are maneuverable and can negotiate the terrain.

Installation of Heliostat Pylons

Installation of the 6-inch galvanized heliostat pylons is presently planned to be installed with a rubber tire hydraulic machine manufactured by ABI. The machine will be further stabilized with outriggers then the pylons will be vibrated into the ground. The siting of pylons will be guided by global positioning system (GPS) technology. The machine weighs approximately 47,000 lbs (Figure 5).

Figure 5 – Concept Pylon Driving Machine

The machine will drive along each heliostat row. Pylons will be delivered by a lightweight mule (Figure 6) and lightweight trailer.

Figure 6 – Lightweight Mule Vehicle

Installation of Heliostat Mirrors

The installation of the heliostat mirrors will be accomplished with a rough terrain crane. The machine expected to be used is a Grove 540E (Figure 7). The crane will be able to mount mirrors on more than 20 pylons before moving to the next location (Figure 8).

Figure 7 – Mirror Installation Crane

The machine will move to the next location after about 16 heliostats have been assembled in a sector. Mirrors will be delivered by a lightweight All-Terrain Vehicle (ATV) (Figure 8) and lightweight trailers. Installation of the heliostats will include stringing of an aboveground communications cable linking the heliostats. The cable installation will be done manually.

Figure 8 – Mirror Installation Sequence

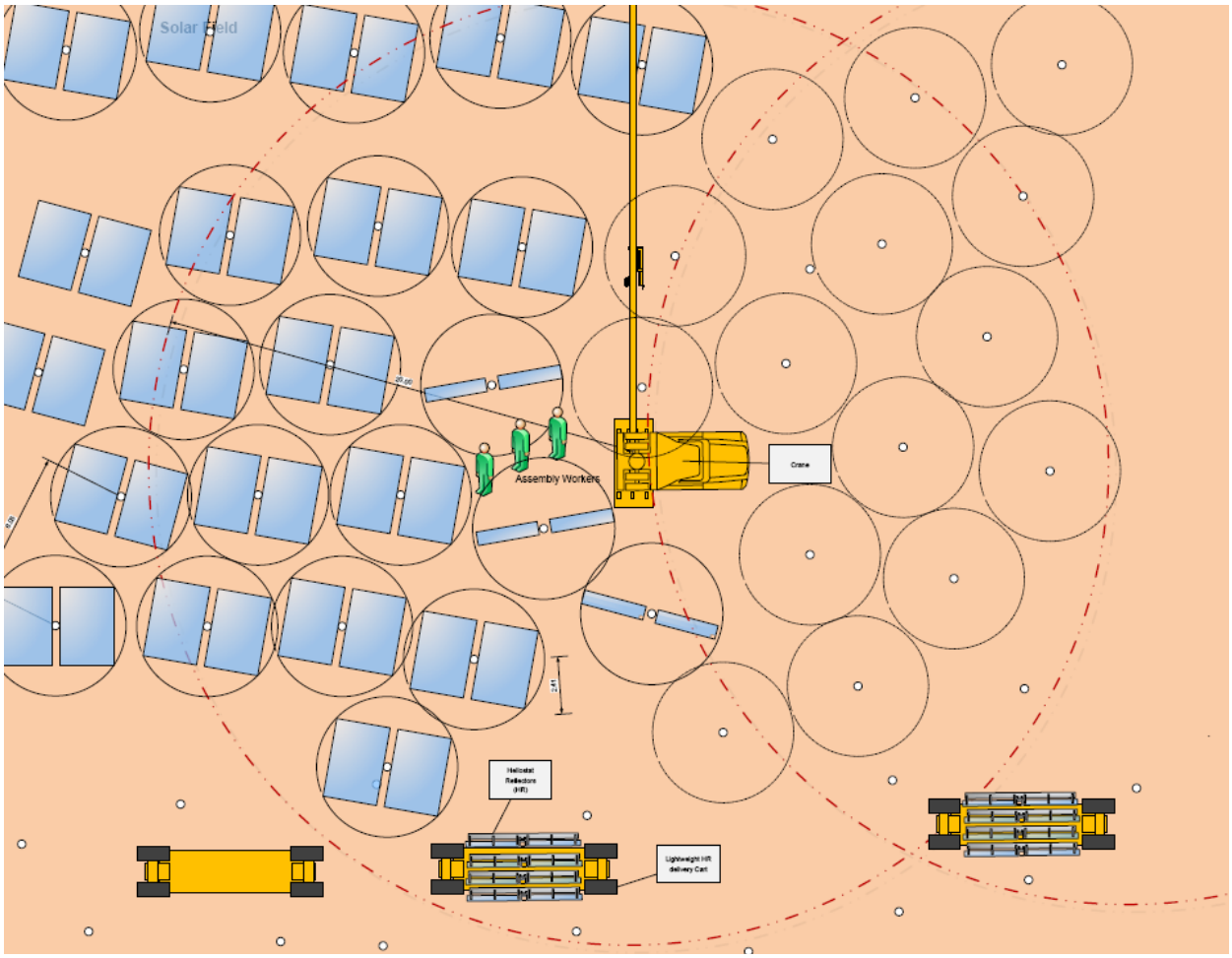

Maintenance Washing of Heliostat Mirrors

Mirror washing will be performed bi-weekly (once every other week) by a machine currently under design. A concept of the washing machine is shown in Figure 9. This machine weighs approximately 48,000 lbs, has three axles, and is highly maneuverable over rough terrain. The washer will haul 500 gallons of water. Continued research and development for a mirror washing machine is in progress. Therefore, the size and type of machine may change. The mirror washing machine will drive on the path created between every other heliostat row.

Storm Drainage Design

Most of the project site will maintain the original grades and natural drainage features of the area and, therefore, will require no added storm drainage controls (see Appendix A).

Power Block Drainage

The power block areas will be level with the surrounding terrain. Stormwater run-on to the power block area, including run-off from the power block itself, will be collected in a system of swales and ditches and diverted around the power blocks.

Figure 9 – Conceptual Mirror Washing Machine

Bypass channels in the project site will be sized to redirect excess offsite stormwater (required for detention) up to the 100-year, 24-hour storm event parameter.

Stormwater Drainage Design

When necessary, offsite stormwater drainage will be collected using a system of swales, berms, and existing ephemeral washes to control and direct stormwater through and around the Ivanpah SEGS site. Onsite drainage will drain across the site as sheet flow where possible.

Diversion channels will be designed to create a minimum ground surface slope of 0.5 percent to provide positive, puddle-free drainage. Storm drainage channels will be lined with a non-erodible material such as compacted rip-rap, geo-synthetic matting, or engineered vegetation.

Design of Erosion and Sediment Control Measures

The proposed site is located on federal land under the control of the BLM. Hence, it is not under the direct authority of San Bernardino County. For design purposes, the erosion and sedimentation control BMPs are being designed to meet the requirements of San Bernardino County. In cases where a county grading permit is required, the general requirements for that permit are subject to the General Plan (San Bernardino County 2007a) and the San Bernardino County Development Code (San Bernardino County 2007b).

The proposed site is zoned for Resource Conservation, so the protection of soil resources will be an important factor in the design of Ivanpah SEGS erosion and sedimentation controls. To minimize wind and water erosion, open spaces will be preserved and left undisturbed to maintain existing vegetation (to the extent possible with respect to site topography and access requirements).

Stone filters and check dams will be strategically placed throughout the project site to provide areas for sediment deposition and to promote the sheet flow of stormwater prior to its leaving the project site boundary. Where available, native materials (rock and gravel) are to be used for the construction of the stone filter and check dams. A rock crusher may be provided onsite to use local stone for the production of gravel. Diversion berms will be used to redirect stormwater as required.

Erosion and sedimentation control calculations will be performed to verify acceptable stormwater velocities, calculate BMP clean-out frequencies, and to size rip-rap. As necessary, diversion channels will be armored as required to prevent erosion and scouring.

Silt fences may be used extensively during each phase of construction to minimize wind and water erosion. Silt fence locations have yet to be determined and will be provided with the engineering drawings as part of the final design.

Periodic maintenance will be conducted as required after major storm events and when the volume of material behind the check dams exceeds 50 percent of the original volume. Stone filters and check dams are not intended to alter drainage patterns but to minimize soil erosion and promote sheet flow. A detail drawing including the proposed stone filters, check dams, and local berms will provided as part of the project design.

Erosion and sedimentation control BMPs will be in accordance with applicable government codes and standards.

Site Stabilization Design

Site areas disturbed during construction may be permanently stabilized by aggregate paving, bituminous paving, hydromulch, or approved soil binders. If areas are to be seeded, the areas to be seeded will use BLM-approved seed mixes.

Yard Work

Security Fencing Design

Security fencing will be 8-foot-tall, galvanized steel chain link with barbed wire as required. Fencing will be positioned around the outer perimeter of each facility, the substation, and the administrative building area. Where access roads and public trails (any exterior road outside of each facility) do not come into contact with security fencing, both tortoise barrier fencing and security fencing may be combined.

Tortoise Barrier Fencing Design

Tortoise barrier fencing will be combined with the perimeter security fence. To facilitate movement of tortoises under access roads or public trails, a barrier fence will be used to form

funnels into the storm drain culvert. The barrier fence shall be buried a minimum of 12 inches below ground level as illustrated in Figure 10.

Tortoise barrier fencing will be constructed in accordance the Recommended Specifications for Desert Tortoise Exclusion Fencing (U.S. Fish and Wildlife Service [USFWS], 2005) (Figure 10).

Road and Trail Design

New roadways will be constructed in accordance with approved local and federal standards with either aggregate or bituminous concrete.

Public trails (dirt) currently passing through the Ivanpah SEGS site will be rerouted around perimeter of each facility as 8- to 12-foot-wide dirt paths (Figure 1). An exception will be the public trail (699198) between Ivanpah 2 and 3, which will be relocated to the 30-foot-wide paved asphalt or gravel public road running between the two plants before transitioning to a 8- to 12-foot dirt path adjacent to the entrance to Ivanpah 3. The dirt path would then continue west between Ivanpah 2 and 3, turning south along the west boundary of Ivanpah 2 where it would reconnect with the existing trail 699198.

Access to each facility power block area from Colosseum Road will be provided by means of a 30-foot-wide paved asphalt road. Site access roads for Ivanpah 1 and 2 will be 12-foot-wide dirt roads extending from the power block areas to the facility's outer perimeter. Site access roads for Ivanpah 3 will be 12- to 15-foot-wide graded dirt roads to provide access to the facility's heliostat field power towers. At all sites, access roads connecting the power towers to the facility's outer perimeter will be 12-foot-wide dirt roads. Each facility will also have a 12-foot-wide dirt perimeter path.

Colosseum Road from Yates Well Road to the Ivanpah SEGS site will be upgraded through the installation of 30-foot-wide asphalt road to provide year-round site access in accordance with current local and federal laws, ordinances, regulations, and standards (LORS).

The section of Colosseum Road that currently passes through the Ivanpah SEGS site will be relocated as a paved asphalt public road to the entry of Ivanpah 2 and will continue as a new gravel road to connect with the existing Colosseum dirt road on the project's west side (see Figure 1). The new public ROW is to be relocated south of Ivanpah 2 and north of the new SCE electrical substation.

Parking Areas

Construction parking areas will be stabilized and dust suppression maximized with a 6-inch layer of crushed stone. Permanent parking areas will be provided at each of the facility's power blocks. An asphalt-paved parking lot will be constructed at the administration/warehouse area. An asphalt parking area may also be provided at the new SCE electrical substation and installed by SCE.

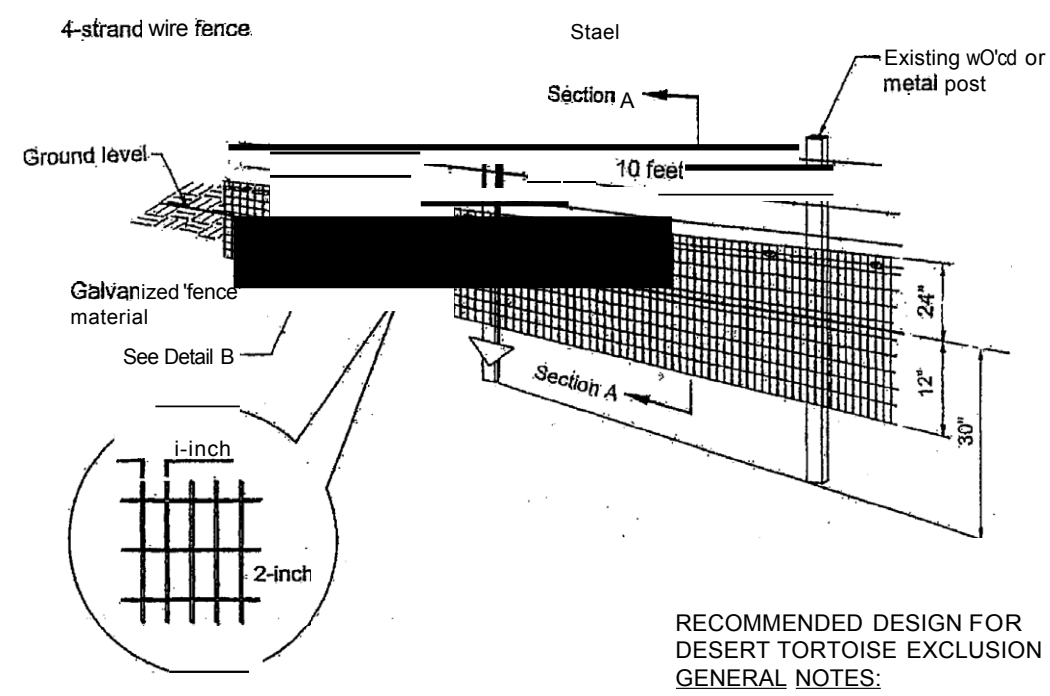

DETAIL A

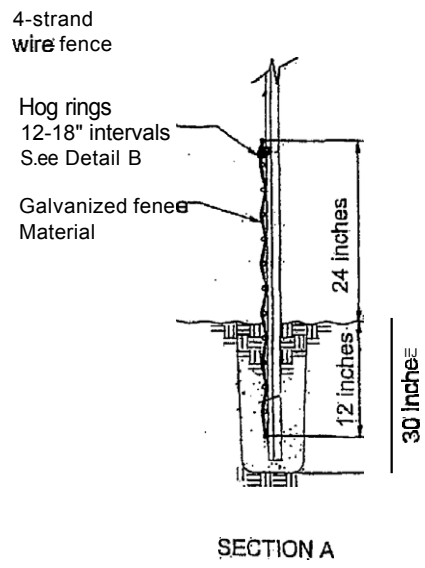

SECTION A

RECOMMENDED DESIGN FOR
DESERT TORTOISE EXCLUSION FENCE

GENERAL NOTES:

1. Ensure that fence posts and materials conform to the standards approved by the U.S. Fish and Wildlife Service.
2. Ensure that the height above ground level is no less than 18 inches and no higher than 24 inches.
3. Ensure that the depth of fence material below ground level is about 12 inches but no less than 6 inches. (See SECTION A above)
4. Install additional steel posts when between existing fence posts exceed 10 feet.
5. Attach fence material to existing fence or wire using hog rings at 12-inch intervals.
6. Fasten fence material to posts with 3 tie wires with a wire near the top, bottom, and center of the fence material.
7. Backfill trenches with excavated material and compact the material.
8. Attach fence material to all gates. Ensure that clearance at base of gate achieves zero ground clearance.
9. Substitute smooth wire for barbed wire if additional support wires are necessary.
10. The number placement of support wires may be modified to allow sheep and deer to pass safely.
11. Erosion at the edge of the fence' material where the fence crosses washes may occur and requires appropriate and timely monitoring and repair.
12. Tie the fence into existing culverts and cattleguards when determined necessary to allow desert tortoise passage underneath roadways.

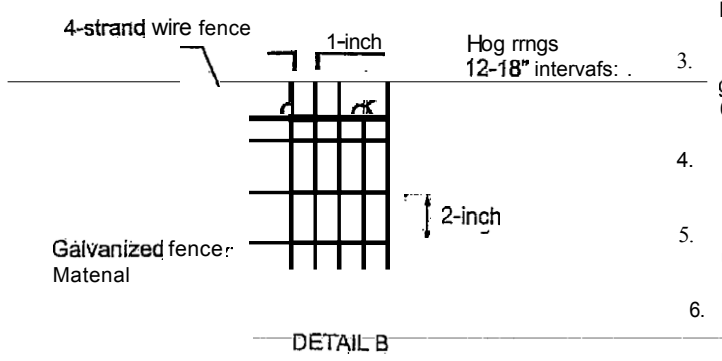

DETAIL B

FOR BEDROCK OR CALICHE SUBSTRATE

1. Use this fence design (see below) only for that portion of the fence where fence material cannot be placed 6 inches below existing ground level due to presence of bedrock, large rocks or caliche substrate.
2. Ensure that the fence height above ground level is no less than 22 inches.
3. Ensure that there is a zero to 2-inch ground clearance at the bend.
4. Ensure that the bent portion of the fence is lying on the ground and pointed in the direction of desert tortoise habitat.
5. Cover the portion of the fence that is flush with the ground with cobble (rocks placed on top of the fence material to a vertical thickness up to 4 inches).
6. When substrate no longer is composed of bedrock or caliche, install fence using design shown above.

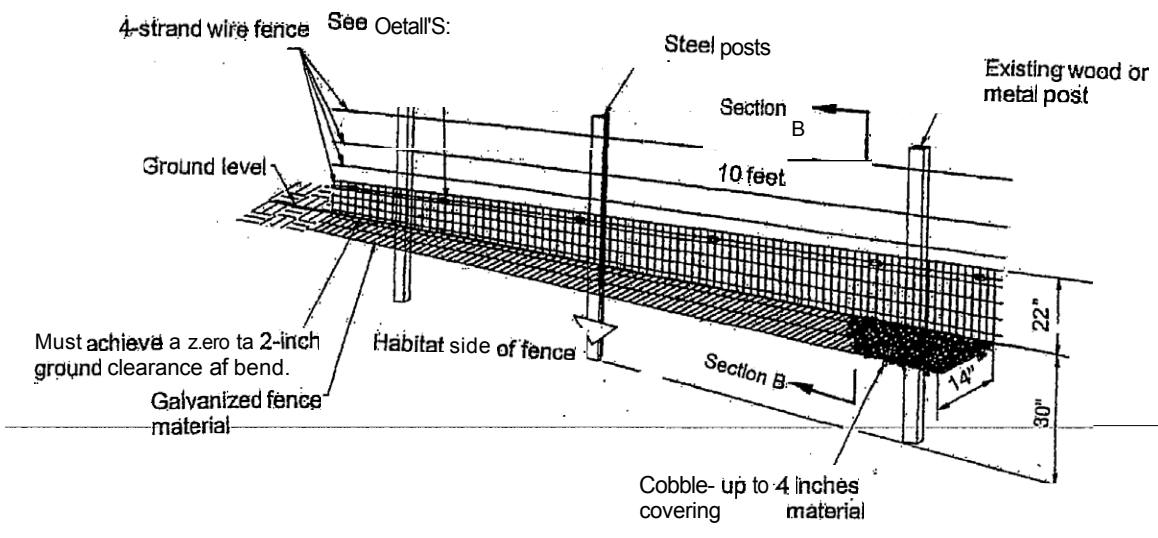

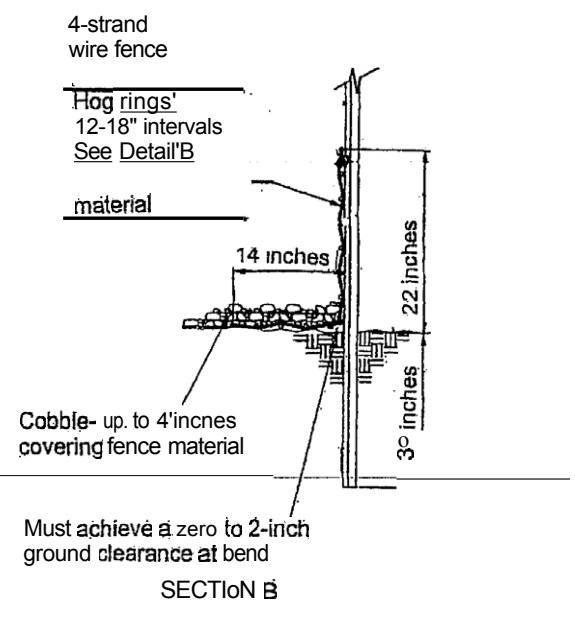

SECTIoN B

FIGURE 10
TORTOISE EXCLUSION FENCE
IVANPAH SOLAR ELECTRIC GENERATING SYSTEM

3.3 PRE-CONSTRUCTION ACTIVITIES

3.3.1 Site Survey

Before construction begins, a land surveyor will obtain or calculate benchmark data, grades, and alignment measurements from plan information and provide control staking to establish the alignments, benchmarks, and elevations. The detailed design documents will furnish data for the horizontal and vertical control points and horizontal alignments, profiles, and elevations. These points will be used during construction to reestablish and set additional control points to maintain the horizontal and vertical control points as needed.

3.3.2 Marking and Flagging of Sensitive Areas

Before construction activities begin, a project biologist will identify areas that require protection to sensitive resources within the site. Areas will be identified through a variety of methods, including flagging, marking paint, signs, rope, or staking.

3.4 CONSTRUCTION ACTIVITIES

3.4.1 Fencing Installation, Clearing, and Grading

Once flagging is complete, the next step prior to any site clearance work is fencing the perimeter of the area to be cleared. Within 24 hours before initiating construction of the desert tortoise-exclusion fence, a desert tortoise survey will be conducted using techniques providing 100 percent coverage of the construction area and an additional transect along both sides of the fence line transect to provide coverage of an area approximately 90 feet wide centered on the fence alignment. Transects will be no greater than 30 feet apart. Two passes of complete coverage will be conducted. All desert tortoise burrows, and burrows constructed by other species that might be used by desert tortoises, will be examined to determine occupancy. Any burrow within the fence line will be collapsed after confirmation that it is not occupied by a desert tortoise or, if occupied, after the desert tortoise has been removed.

Combined tortoise and security fence will be installed, while clearing vegetation only if required. All fencing will be constructed with durable materials (i.e., 11 gauge or heavier) suitable to resist desert environments, alkaline and acidic soils, wind, and erosion. Tortoise exclusionary fence material will consist of 1-inch horizontal by 2-inch vertical, galvanized welded wire, 36 inches high. This fence material will be buried a minimum of 12 inches below the ground surface, leaving 22 to 24 inches above ground. A trench will be dug to allow 12 inches of fence to be buried below the natural level of the ground. A permanent I-beam design desert tortoise guard would be installed to allow equipment access to the fenced sites and exclude desert tortoises (Figure 2).

Although soil disturbance will be minimized as much as possible, the entire area covered by the solar plant sites and related facilities would no longer be available to tortoises for habitat. The sites (and related facilities such as the substation and administration building) would be fenced and tortoises would be excluded during construction and operation. The solar plant sites and the area used for access roads, transmission poles, and the substation and administration building are included in the total area that would be permanently disturbed by development activities.

Regarding stormwater runoff and hydrologic connectivity, the solar field development would maintain unobstructed sheet flow as much as possible. The finish grade of the power block and power tower areas would be about the same level as the surrounding grade with moderate transition slopes to protect them from floods and return the relatively small local diversions to sheet flow through the solar fields. Also, a few drainage channels would be required to redirect the stormwater and minimize erosion. Overall the project would be designed to maintain, to the extent possible, the existing sheet flow patterns and ephemeral drainages.

3.4.2 Power Blocks

All three units (Ivanpah 1, 2, and 3) will have their own individual power block. The site will be graded to create relatively level power block pad elevations with approximate balanced cut and fill earthwork for each power block. The size of both Ivanpah 1 and 2 power blocks will be approximately 6.9 acres, and the Ivanpah 3 power block will be approximate 8.5 acres. Each power block will contain, but is not limited to, the equipment listed in Table 3-2.

TABLE 3-2
Power Block Equipment List

Steam Turbine	Power Tower
Generator	Generator Step-up Transformer
Auxiliary Boiler	Unit Auxiliary Transformer
Air-cooled Condenser	SUS Transformer
Feed Water Heaters	Raw Water/Fire Water Tank
Boiler Feed Pumps	Demineralized Water Tank
Plant Services Building	Raw Water Forwarding Pumps
Water Treatment Equipment Area	Demineralized Water Forwarding Pumps
Underground Gas Pipeline	Electrical Substation
Concrete Holding Basins	115 kV Generation Tie Line
Condensate Tank/Pump	Wastewater Tank
Emergency Generator	Domestic Water System
Local Control Building	
Solar Superheater/Reheater Receiver	Access Roadway

3.4.3 Support Equipment and Utilities

Construction of the Gen-tie Lines

The 115-kV generation tie line (gen-tie) structures, insulators, conductors, and other equipment will be delivered to a construction laydown area or marshalling yard located either in the Construction Logistics Area, near the switchyard at the power block of the unit under construction, or in the laydown area adjacent to the Ivanpah substation.

Construction crews would deliver the poles and other equipment from the laydown area to the individual pole locations. In most locations, the poles could be placed on the side of the 12-foot-wide dirt access roads. Construction vehicles would follow a route between the substation and the heliostat field. At most, four or five vehicles would need to use this access route to erect the poles.

Construction activity is usually confined within the electrical easement with little or no disturbance to the adjacent lands. An area approximately 100 feet by 20 feet may be temporarily disturbed at each pole site during pole setting activities. Where poles with concrete foundations are located (angle locations), the maximum area of temporary construction disturbance would be approximately 100 feet by 30 feet.

For each embedded pole location, the crews would auger a hole approximately 10 feet deep. The soil would be backfilled and compacted around the pole. Setting the poles would require 1 or 2 days at each pole location. Augering, the noisiest activity, would last 15 to 30 minutes. Soil that is excavated and is determined to be surplus would be used as fill elsewhere on the Ivanpah SEGS site.

Poles with a concrete foundation would require an excavation 20 to 30 feet deep and less than 7 feet in diameter. Where the soils are sandy, approved soil stabilizers may be needed to prevent the soil from sloughing back into the pits. A circular cage of rebar, up to 6 feet in diameter, would be assembled and lowered into the pit, and a concrete foundation would be poured and allowed to cure for 7 days or longer. The steel pole would then be mounted and bolted to the foundation.

To string the conductors onto the poles, the construction crew would first pull a rope through travelers or pulleys, which would be attached to the insulators on the structures. Three ropes would be used—one for each conductor phase. Each rope will then be attached to its respective conductor. Reel trucks and tensioners would be used to pull the conductors and set the proper sag. Temporary disturbance at each pulling location will be approximately 100 feet by 40 feet for tensioner and reel truck positioning.

Construction of the Substation

Substation construction would be performed by SCE (or its contractor) and would consist of grading and site preparation, foundation excavation and pouring, equipment delivery and installation, and wiring and testing.

Grading of the approximate 16.1-acre site (the area is approximately 830 feet x 850 feet) would require an estimated 2 to 3 weeks. Additionally, a 5-foot-wide graded apron will extend outside the boundary fence around the substation’s perimeter. Once graded, the area will be graveled and dunnage will be used for equipment and material storage during construction of the substation. The substation site is large enough to provide for laydown of substation construction materials and equipment, as well as construction parking within it. Temporary berms may be placed around the construction site to prevent stormwater from flowing across the site during construction.

Equipment and materials for substation construction would be delivered and stored in the laydown area within the site. Hazardous materials such as paints, epoxies, grease, and

compounds would be stored in lockers or covered containers within these areas. Transformer oil and caustic electrolytes (battery fluid) would be delivered after the electrical equipment is in place.

Telecommunications Line

Poles Accessible by Service Road

The overhead cable would be installed by attaching cross arms on existing distribution poles. This would require the use of a bucket truck. Four people and two trucks would be used. A crew can install up to 2,000 feet of cable in 1 day or complete three splices in 1 day.

Overhead fiber-optic cable stringing includes all activities associated with the installation of cables onto cross arms on existing wood pole structures. This activity includes installing vibration dampeners, and suspension and dead-end hardware assemblies. Stringing sheaves (rollers or travelers) are attached during the framing process. A standard wire stringing plan includes a sequenced program of events, starting with determination of cable pulls and cable pulling equipment set-up positions. Advanced planning by supervision determines pulling locations, times, and safety protocols needed for ensuring that safe and quick installation of cable is accomplished.

Fiber-optic cable pulls typically occur every 10,000 to 20,000 feet over flat or mountainous terrain. Fiber-optic cable splices are required at the ends of each cable pull. “Fiber-optic cable pulls” are the length of any given continuous cable installation process between two selected points along the existing overhead or underground structure line. Fiber-optic cable pulls are selected, where possible, based on availability of pulling equipment and designated dead-end structures at the ends of each pull, geometry of the line as affected by points of inflection, terrain, and suitability of fiber-optic cable stringing and splicing equipment set ups. The dimensions of the area needed for stringing set ups varies depending upon the terrain; however, a typical stringing setup is 40 feet by 60 feet. Where necessary because of space limitations, crews can work from within a substantially smaller area.

For the installation of the fiber-optic cable in existing and new underground conduit, a high-density polyethylene smoothwall innerduct would be used. Innerduct facilitates the installation of the fiber-optic cable, provides protection, and helps identify the cable. The innerduct is installed first inside the conduit. The fiber-optic cable is then installed inside the innerduct.

Poles to be Constructed on Foot

SCE estimates that approximately 20 poles are not accessible from the existing dirt service roads. Poles with potential access issues are located between Pole 4045066E/67E (the last H-frame structure accessible from the dirt service road east of Mountain Pass Substation) and Pole 4045099E—the single corner pole before you get to the end of the existing access road southwest of the proposed Ivanpah substation site (see Figure 11). Construction of the fiber-optic line on these poles would be done by workers on foot. A summary of the poles with potential access issues is as follows:

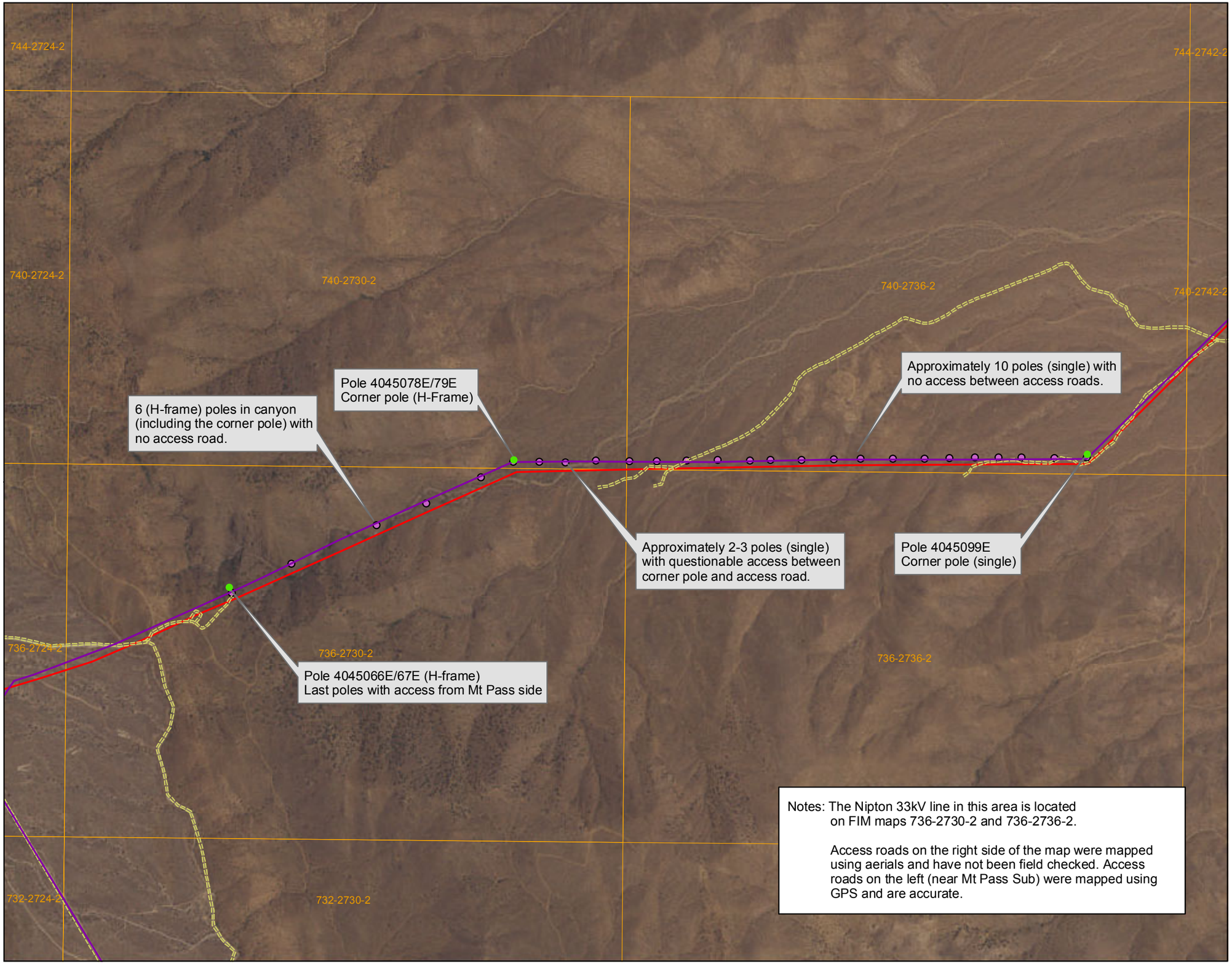

Notes: The Nipton 33kV line in this area is located on FIM maps 736-2730-2 and 736-2736-2.

Access roads on the right side of the map were mapped using aerials and have not been field checked. Access roads on the left (near Mt Pass Sub) were mapped using GPS and are accurate.

Eldorado Ivanpah Transmission Project
Access Roads

LEGEND

EITP_bio_access_roads_20090119
EITP_bio_dist_poles_20090120

EITP_bio_telecom_20090109

Telecom: Nipton 33kV
Telecom: Eldorado-Lugo 500kV
Telecom: New fiber optic line
Eldorado_Mt_Pass_TL
FIM Overhead Grid

FIGURE 11

0 500 1,000 2,000 Feet
0 50 100 200 300 400 Meters
1:12,000

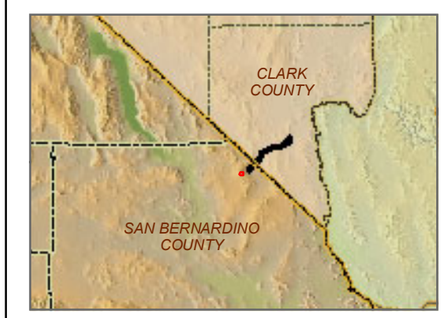

Roger Overstreet
SCE Corp Env Health & Safety
Eldorado Ivanpah Transmission Project
Projection: NAD 83 UTM Zone 11

Southern California Edison (SCE) has no reason to believe that there are any inaccuracies or defects with information incorporated in this work and make no representations of any kind, including, but not limited to, the warranties of merchantability or fitness for a particular use, nor are any such warranties to be implied, with respect to the information or data, furnished herein. No part of this map may be reproduced or transmitted in any form or by any means electronic or mechanical, including photocopying and recording system, except as expressly permitted in writing by SCE.

Features depicted herein are planning level accuracy, and intended for informational purposes only. Distances and locations may be distorted at this scale. Always consult with the proper legal documents or agencies regarding such features.

This map is copyrighted and reproduced with permission granted by THOMAS BROS. MAPS (R).

Thomas Bros. Maps® A RAND McNALLY COMPANY

Contains Transmission Information
Distribution limited to FERC Standards of Conduct
CONFIDENTIAL Contains
Critical Electric Infrastructure Information
If any questions please call Roger Overstreet (27875)
for handling/storage requirements.

SOUTHERN CALIFORNIA EDISON
An EDISON INTERNATIONAL™ Company

- **Poles 4045068E/69E to Pole 4045078E/79E (corner structure):** Six H-frame structures in the canyon east of the last structures accessible from the Mountain Pass access roads. These poles are located on a steep east-facing slope and along the wash in the canyon. No access roads are visible in aerial photos.

- **Poles 4045080E to 4045083E (single wood poles):** Two or three poles between the H-frame corner pole and access road to the east may not have access roads. Because of the presence of small washes in the area, it is difficult to determine whether there are access roads from aerial photographs. However, there appears to be a two-track road to these poles or near these poles.

- **Poles 4045084E to 4045099E (single wood poles):** Approximately 10 poles located in the area between the two existing access roads do not appear to have access roads to the poles.

Natural Gas Line

Natural gas would be used as a supplementary fuel for project operation. Each phase of the project includes a small package natural gas-fired start-up boiler to provide heat for solar plant start-up and during temporary cloud cover. Natural gas would be obtained by the construction of a new 6-mile-long (from the tap station to the Ivanpah 1 power block), 4- to 6-inch distribution pipeline starting from the existing KRGT pipeline located approximately 0.5-mile north of the Ivanpah 3 site. A temporary construction area (200 feet by 200 feet) would be located at the point of connection. From the tap station, the natural gas line would head south along the western edge of Ivanpah 3 to a metering station (10 feet by 40 feet) near its southeast corner. Although the gas line and metering station would be within the area that was surveyed, they would be located outside the project's fenced heliostat fields, and a dirt access road would follow the pipeline so that the gas company has access to it for maintenance.

From the metering station at Ivanpah 3, the gas line (and a 12-foot-wide dirt access road or paved road—between along Ivanpah 2) would continue along the eastern edge of Ivanpah 2 to another metering station (20 feet by 40 feet) on the southeast corner, below Colosseum Road, that would serve Ivanpah 1 and 2. Again, the gas line and metering station would be located within the project area, but outside the fenced heliostat fields. From that metering station, the gas line to Ivanpah 1 would be located within (or adjacent to) the paved access road that goes from Colosseum Road past the administration building to the Ivanpah 1 site.

During construction of the line segment from the tap station to the two metering stations, Southwest Gas (who will own that portion of the gas line) states that a 75-foot-wide construction corridor may be disturbed. This temporary construction corridor would be used to store the excavated soil, provide access for equipment and vehicles, and provide space for fitting the pipeline prior to installation and backfill via backhoe. If metal piping is used, a cathodic protection system would be designed to control the electrochemical corrosion of designated metal piping buried in the soil. Depending on the corrosion potential and the site soils, either passive or impressed current cathodic protection would be provided. Once completed, Southwest Gas requires that an 8- to 12-foot-wide dirt service road be maintained over the gas line for maintenance purposes.

Construction would require temporary disturbance of the ROW (e.g., vegetation clearing, trench excavation, soil compaction, dust generation, and restoration). The temporary construction disturbance area for the KRGT tap point would be a 200-foot by 200-foot area. Construction of the Ivanpah 3 metering set would use a temporary laydown area within the Ivanpah 3 site; whereas, construction of the Ivanpah 1 and 2 metering set would use a temporary 5.0-acre triangular area between Ivanpah 2 and the realigned Colosseum Road (see Appendix A, Figure 19).

Water Supply Pipelines

During construction, a 50-foot-wide ROW may be disturbed. This temporary construction corridor would be used to store the excavated soil, provide access for equipment and vehicles, and provide space for fitting the pipeline prior to installation and backfill.

Construction would require temporary disturbance to the approximate 1,075-foot-long corridor (e.g., vegetation clearing, trench excavation, soil compaction, dust generation, and restoration). The temporary construction disturbance area for the water supply line located just north of Ivanpah 1 would encompass 1.2 acres, with permanent disturbance of 0.3 acres (assuming a 12-foot-wide dirt access road).

3.5 FACILITIES OPERATION AND MAINTENANCE ACTIVITIES

Ivanpah SEGS would be designed for an operating life of 50 years.

3.5.1 Routine Inspections and Maintenance outside Fenced Areas

The Ivanpah SEGS will require routine inspections and maintenance outside fenced areas to remain in operation. The security fences around each of the three solar plants would be designed to exclude desert tortoises. The potential for direct effects on tortoises from maintenance are only expected as a result of those few actions that would be conducted outside the fenced areas. Therefore, only those maintenance activities occurring outside of the fenced area are included in this section. Those project components would include the natural gas pipeline ROW, water pipeline ROW, and perimeter fence.

The anticipated maintenance activities that could occur outside the fenced solar plant sites are grouped into the following five categories:

- Class I: Maintenance activities that do not result in new surface disturbance
- Class II: Maintenance activities that result in minimal surface disturbance
- Class III: Maintenance activities that result in major surface disturbance
- Class IV: Maintenance activities that may extend outside the project ROW
- Class V: Emergency repairs

Class I are those maintenance activities outside the fenced area that do not result in new surface disturbance. These activities include tasks that would be performed by hand or with the use of tools, equipment, and/or vehicles. Class I activities would take place on existing structures or would be staged from existing roads or likewise disturbed areas (excluding those areas subjected

to restoration). They would not include off-road travel. Vehicles used for such tasks would likely include those primarily used for transportation or lifting purposes. Low-boy tractor and trailer, flat bed, utility trucks, forklifts, scissor lifts, cherry pickers, and mechanical hoists may be used to transport equipment and materials and to lift heavy objects. Labor may involve several workers confined to the area in need of maintenance. These activities may need to be performed on a routine daily or as-needed basis.

Class II activities would result in minimal surface disturbance. These activities would likely be performed with heavy earth-moving equipment including motor grader, bulldozer, front-end loader, backhoe, water truck, asphalt paver, and dump truck. Labor may involve several workers confined to the area in need of maintenance. Class II activities may involve the following:

a) Underground utility (e.g., water, gas, sewage, electrical, communication, etc.) repairs, upgrades, and tie-ins to structures
b) Maintenance of drainages for proper flow of water runoff, including the removal of debris along the security fences and remedy for areas of undercut fence
c) Major security and desert tortoise exclusionary fence repairs
d) Pipeline segment replacement; if a below grade inspection reveal severe damage, then excavation and replacement of a portion of the pipeline would be necessary.
e) Installation of anodes, if routine cathodic protection surveys reveal an isolated gas pipeline segment with low pipe-to-soil electrical potentials
f) Below-grade gas pipe and coating inspections indicating low pipe-to-soil electrical potentials where a portion of the pipe would be excavated for visual inspection
g) Installation of anode flex for cathodic protection, if a below-grade inspection reveals failed gas pipeline coating where excavation and recoating of the pipeline segment could be necessary

Class III includes maintenance activities that result in major surface disturbance. Class III activities may involve the following:

a) Installation of a new underground pipeline a distance of 1,000 feet or more
b) Disturbance of 1 acre or more for construction of a new stormwater drainage feature

Class IV includes maintenance activities that may include any of the previously mentioned actions that would extend beyond these limits. The extent of disturbance may vary with the project and depend upon the ROW width, topography, layout, and other factors. Class IV activities may require additional consultation with the USFWS prior to implementation.

Class V includes emergency actions to ensure public safety, service reliability, and to protect the environment. Emergency repairs may include temporary closure and bringing the solar plant back online, utility outages, pipeline leaks or breaks, fire control, human medical emergency, and reestablishment of access roads severely damaged by storms. These activities may involve a backhoe and/or cat-loader, motor grader, and possibly other heavy earth-moving equipment. It is anticipated that most emergency situations would affect less than 0.5 acre, although the amount of habitat disturbance would vary depending upon the nature of the emergency. The applicant may need to consult with the USFWS following the emergency action if those activities extend

beyond the action area. It is intended that emergency vehicles will use paved public roads for access.

3.5.2 Power Block and Solar Fields

Water System

Operation requirements necessitate the washing of some portion of the project's solar heliostats on a nightly basis. Individual heliostats are washed about once every 2 weeks (bi-weekly). The application rate per heliostat would be 2.5 gallons once every 2 weeks. Heliostat wash water requirements for Ivanpah 1 and 2 will be 3,575,000 gallons per year or 10.97 acre-feet per year (afy) and 6,760,000 gallons or about 20.75 afy for Ivanpah 3, for total deionized water consumption of 42.7 afy after project build-out.

Because of dust created during site grading, it is possible that this washing cycle may need to be more frequent during the first 5 months of construction of Ivanpah 3, when Ivanpah 1 is operating. The amount of additional water needed for mirror washing during this 5-month period depends on several factors such as the frequency, speed, and direction of wind and the amount of dust created by the grading activities. Additionally, during construction of Ivanpah 3 (as with the other units), dust suppression (water or soil binders) will be used to minimize wind erosion. Also considering that the closest points between Ivanapah 1 and Ivanpah 3 exceed 1.5 miles, it is not likely that any additional mirror washing will be needed. However, it was conservatively estimated that the frequency of mirror washing would, at most, double (i.e., weekly washing). If washing frequency is doubled, the amount of water required would be: 55,000 heliostats x 2.5 gallons per heliostat x 22 weeks = 3,025,000 gallons; or about 9.3 acre-feet. Therefore, the amount of additional water required is estimated not to exceed 4.6 acre-feet.

BMPs for the use of wash water are outlined in the Preliminary Draft Drainage, Erosion, and Sediment Control Plan (DESCP) (CH2M HILL, 2009b). The water used for heliostat washing would be deionized or soft water, and thus, very high-quality water containing only minimal iron and copper from the water piping. A pressure washer or other method will be used to wash the heliostats to minimize the amount of water used (about 2.5 gallons per heliostat or 1.25 gallons per mirror). Assuming no evaporation of the wash water and uniform dispersion across the mirror, the 7.2-foot-wide mirror would have runoff of 0.174 gallons per linear foot (or about 22.2 fluid ounces per linear foot). Given such small amounts, no water is anticipated to run offsite as a result of these washing activities. Because of the high evaporation rates in the area and the minimal amount of water used, it is likely that wash water would evaporate at or just below the ground surface. Stormwater discharge during construction would adhere to a Stormwater Pollution Prevention Plan (SWPPP), the DESCP, and state water quality standards.

Water consumption is considered minimal (estimated at less than 100 acre-feet/year for all three solar plants) and would mainly be used to provide water for washing heliostats and to replace boiler feedwater blowdown. Groundwater would go through a treatment system for use as boiler make-up water and to wash the heliostats.

Concrete Holding Basins

Any reject streams from water treatment (for example, from the reverse osmosis system, if used) would be trucked offsite for treatment or disposal. However, two concrete-lined (or an approved

alternate lining system) holding basins of about 40 feet by 60 feet by 6 feet deep are included in the power block area. They can serve for boiler commissioning and emergency outfalls from any of the processes. No waste streams will be discharged to the concrete holding basins.

Waste Management

Waste management is the process whereby all operational wastes produced at Ivanpah SEGS are properly collected, treated (if necessary), and disposed of. Wastes may include process waste, nonhazardous waste, and hazardous waste, both liquid and solid.

The primary wastewater collection system would collect process wastewater from all equipment, including the boilers and water treatment equipment. Each power block would include portable facilities that will be serviced regularly by an outside vendor. The administrative/warehouse building would include a small onsite wastewater package treatment plant that would treat wastewater from domestic waste streams, such as showers and toilets. Sewage sludge would be removed from the site by a sanitary service provider. All wastewater would be recycled in the system, except for a small stream that would be treated and used for landscape irrigation around the administrative building. Drinking water will either be brought onsite or a small filter/purification system would be used to provide potable water at the administration building.

Fire Protection

The fire protection system would be designed to protect personnel and limit property loss and plant downtime in the event of a fire. The primary source of fire protection water would be the raw water storage tank located in each of the power blocks. Fire protection would be supplied to the Administration Building from the water supply line going from the wells to the raw water storage tanks at the power blocks. Electric jockey pumps and electric-motor-driven main fire pump would be provided to increase the water pressure in the plant fire main to the level required to serve all fire fighting systems. Additionally, a back-up diesel engine-driven fire pump would be provided to pressurize the fire loop if the power supply to the electric-motor-driven main fire pump fails. A fire pump controller would be provided for each fire pump.

The fire pump may discharge to a dedicated underground firewater loop piping system. Normally, the jockey pump would maintain pressure in the firewater loop. Both the fire hydrants and the fixed suppression systems would be supplied from the firewater loop. Fixed fire suppression systems would be installed at determined fire risk areas, such as the transformers and turbine lube oil equipment. Sprinkler systems would also be installed in the administration/ control/warehouse/maintenance building and fire pump enclosure as required by National Fire Protection Association (NFPA) and local code requirements. Hand-held fire extinguishers of the appropriate size and rating would be located in accordance with NFPA. BSE is consulting with the San Bernardino County Fire Marshal on the design of the fire system.

3.6 FACILITY DECOMMISSIONING AND CLOSURE ACTIVITIES

Decommissioning procedures are designed to ensure public health and safety, environmental protection, and compliance with applicable regulations. It is assumed that decommissioning would begin 50 years after the commercial operation date of the solar plant. It is also assumed that decommissioning of the facility would occur in a phased, sequential manner. The procedures

for decommissioning and closure are detailed in the Draft Closure, Revegetation and Rehabilitation Plan (CH2M HILL, 2009a).

4.0 REFERENCES

California Stormwater Quality Association. 2003. California Stormwater Best Management Practices (BMPs) Construction Handbook for New Development and Redevelopment, January.

CH2M HILL. 2009a. Draft Closure, Revegetation and Rehabilitation Plan for the Ivanpah Solar Electric Generating System Eastern Mojave Desert San Bernardino County, California, Attachment DR125-3A, Data Response Set 2G. January. [Note this document is currently being revised and will be resubmitted with a new Data Response set.]

CH2M HILL. 2009b. Preliminary Draft Drainage, Erosion, and Sediment Control Plan, Revision 2. Attachment DR140-1B, Data Response Set 2G. April.

Clark County. 1999. Regional Flood Control District Hydrologic Criteria and Drainage Design Manual.

Low Impact Development Center (LIDC). 2007. A Review of Low Impact Development Policies: Removing Institutional Barriers to Adoption. Commissioned and Sponsored by: California State Water Resources Control Board Stormwater Program And The Water Board Academy. LIDC, Beltsville, MD www.lowimpactdevelopment.org

New York Turtle and Tortoise Society. 1997. The Effect of Roads, Barrier Fences, and Culverts on Desert Tortoise Populations in California, USA.

OSHA Part 1926 (29 CFR Part 1926)

San Bernardino County. June 9, 2005. Stormwater Program, Model Water Quality Management Plan Guidance. Revised.

County of San Bernardino. 2007a. General Plan. June 5, 2007. http://www.co.san-bernardino.ca.us/landuseservices/.

County of San Bernardino. 2007b. Development Code. June 5, 2007. http://www.co.san-bernardino.ca.us/landuseservices/.

Soil Conservation Service (now the National Resource Conservation Service, NRCS). 1986. Service Publication TR-55.

Terracon Consultants, Inc. 2007. Geotechnical Engineering Report of Solar Power Plant, Ivanpah Valley, San Bernardino County, California. Prepared for BrightSource Energy, Inc. July 11.

U.S. Fish and Wildlife Service. 2005. Recommended Specifications for Desert Tortoise Exclusion Fencing. September.

Williamson and Schmidt, 1986. Civil Engineers, San Bernardino County Hydrology Manual. Irvine, CA.

Appendix A
Civil Engineering Design Drawings

Appendix B
Geotechnical Engineering Report

Soil and Water Resources (139)

BACKGROUND

In the Mojave Desert, rainfall usually occurs during brief but intense storms. An average of three inches per year of rainfall can be expected at the project site. The water that does not infiltrate into the ground or evapotranspire flows as surface runoff and at times can result in flash flood conditions. Conditions at the site indicate past surface flows have had enough energy to transport gravel and cobbles across the project site. The plants on the grade of the bajada (coalescing alluvial fans), on which the project is proposed, help retain sediment and reduce erosion potential from runoff. Removing all the vegetation to the root system would dramatically alter the surface runoff pattern that has naturally developed and likely allow transport and deposition of coarser material on distal portions of the fan and ultimately the Ivanpah Dry Lake bed. At such a large scale, up to 3,400 acres of vegetation removal and ground disturbance, management of the surface water flows will require extensive engineering. The project applicant has already stated they would supply a final grading plan.

DATA REQUEST

139. As part of the final grading plan, please describe in detail, using illustrations and written descriptions as necessary, the following:

    a. How sheet and channel flow across the project site, over roads, around the heliostats, and off the site would be managed through engineering controls.

    b. Calculations showing the stormwater engineered controls have sufficient capacity for a 100-year, 24-hour storm event.

    c. Erosion and deposition predictions on the up-slope and down-slope sides of the projects.

    d. Please describe the engineering controls in the event of a hazardous or nonhazardous spill.

    e. Please explain in writing and with illustrations how the principles of Low Impact Development would be integrated into the final grading plan.

Response: The Applicant has revised its approach to stormwater management to better apply the principles of low impact development (LID). Attachment DR139-1A provides the clarification and additional information requested by BLM and CEC for comments provided to the Applicant on its LID stormwater design.

ATTACHMENT DR139-1A

BrightSourceEnergy™

Mr. Raymond C. Lee
Bureau of Land Management
Needles Field Office
1303 South Highway 95
Needles, California 92363-4228

Subject: **Ivanpah Solar Energy Generating System — Responses to BLM and CEC Comments on Stormwater Management Approach, Hydrology Studies, and Grading and Drainage Plans for Project: 2800P, CACA-48668/2800 (CA-690.01)**

Dear Mr. Lee:

Please find attached BrightSource Energy (BSE) responses to comments received from the Bureau of Land Management (BLM) and the California Energy Commission (CEC) on the stormwater management approach, hydrology studies, and grading and drainage plans for the Ivanpah Solar Energy Generating System (ISEGS). The responses reflect a change from a large-scale active stormwater management approach to a low-impact development approach.

Responses have been prepared for comments received on the following documents:

- *Comments/Observations on ISEGS Work Scope for Attachment A – Hydrogeologic Analysis, and Attachment B – Work Scope for Hydraulic Analysis* prepared by BLM and received by BSE on February 4, 2009, unknown reference number (see attached Exhibits CL-1, CL-2, and CL-3).
- Comments on *ISEGS Stormwater – Preliminary Analysis of Infiltration for Selected Land Surface Conditions* provided by Mr. Raymond Lee of BLM to Ms. Alicia Torre of BSE on February 20, 2009, reference 2800P, CACA-48668 (see attached Exhibit CL-4).
- *Comments on ISEGS Stormwater Management Approach and Technical Memos* provided by Mr. Raymond Lee to Mr. Todd Stewart of BSE on April 8, 2009, reference 2800, CACA-48668/2800 (CAC-690.1) (see attached Exhibit CL-5).

This document provides the clarification and additional information requested by BLM and CEC for each comment. Each BLM and CEC comment is presented, followed immediately by BSE's response. In addition, a BSE number has been provided to allow for cross-referencing of prior responses.

If you have any questions, please contact me at your convenience at office 510-250-8160, or my cellular 415-608-3291.

Regards,

Thomas Reagan

1999 Harrison Street, Suite 2150 • Oakland, Ca 94612 • Telephone: 510-550-8161 • Fax: 510-550-8165
Email: info@brightsourceenergy.com • Website: www.brightsourceenergy.com

COMMENTS AND OBSERVATIONS ISEGS WORK SCOPE FOR ATTACHMENT A – HYDROGEOLOGIC ANALYSIS AND ATTACHMENT B – WORK SCOPE FOR HYDRAULIC ANALYSIS 1

COMMENTS/OBSERVATIONS, ISEGS STORMWATER – PRELIMINARY ANALYSIS OF INFILTRATION FOR SELECTED LAND SURFACE CONDITIONS 9

COMMENTS/OBSERVATIONS IVANPAH SEGS STORMWATER MANAGEMENT APPROACH AND TECHNICAL MEMOS 14

LIST OF REFERENCED DOCUMENTS 25

EXHIBITS FOR SPECIFIC RESPONSES 26

COMMENTS AND OBSERVATIONS ISEGS WORK SCOPE FOR ATTACHMENT A – HYDROGEOLOGIC ANALYSIS AND ATTACHMENT B – WORK SCOPE FOR HYDRAULIC ANALYSIS

The Ivanpah Solar Energy Generating System (ISEGS) Work Scope for Attachment A – Hydrogeologic Analysis (see attached Exhibit CL-2), and Attachment B – Work Scope for Hydraulic Analysis (see attached Exhibit CL-3) were prepared by BrightSource Energy BSE for West Yost Associates, Inc. (WYA) to implement. The Bureau of Land Management (BLM) provided comments on these scope documents.

Responses to comments from BLM on these documents follow.

Comment 1 [BSE-1]

The scope proposed the use of the Clark County Hydrologic Criteria and Drainage Design Manual (Clark County 1999), in place of the San Bernardino County Hydrology Manual (San Bernardino 1986). The rationale is that the Clark County manual incorporates analyses specific to alluvial fans, while the San Bernardino manual does not. In general, BLM agrees that the alluvial fan calculations from the Clark County manual may be used for the purpose of estimating potential runoff, stormwater damage, and sedimentation. However, the applicant must meet the stormwater management requirements of San Bernardino County.

Response BSE-1

BSE acknowledges BLM's concurrence that the alluvial fan calculations from the Clark County manual may be used to estimate potential runoff, stormwater damage, and sedimentation.

BSE has developed an approach that would meet the stormwater management requirements for San Bernardino County if ISEGS were located on unincorporated, privately owned lands rather than on federal, BLM-administered property.

San Bernardino County's requirements are outlined in the *County of San Bernardino 2007 General Plan* and its companion document *Title 8 – Development Code of the County of San Bernardino*. The San Bernardino County general plan outlines the policies and programs the county has in place that are intended to motivate land use decisions for unincorporated, privately owned lands in San Bernardino County. The San Bernardino County Title 8 document details the codes necessary for proper implementation of stormwater erosion and sediment and runoff control. The San Bernardino County Hydrology manual provides computational techniques and criteria for estimating runoff, discharges, and volumes for use in hydrology study submittals to San Bernardino County, with a goal of 100-year return frequency flood protection for all habitable structures and other non-flood proof structures (Section A.2).

The general plan indicates that "adequate flood protection to minimize hazards and structural damage" (Goal S5) must be provided for a development such as ISEGS on privately owned lands. The San Bernardino County general plan then outlines 10 official policies that aid in achieving this stated goal. A majority of these policies are not applicable as, according the Federal Emergency Management Agency (FEMA) flood insurance rate and flood boundary maps, the project site is not located in or near a floodway or floodplain. However, policy S 5.5 of Goal S 5 applies and requires "specific hydrology and hydraulic studies for development proposals to avoid spot flooding from small streams or unmapped areas adjacent to mapped flood

areas." The general plan provides further guidance for developments in Policy CO 5.4, where it indicates "maintenance of drainage courses in their natural condition to the greatest extent feasible to retain habitat, allow some recharge of groundwater basins, and resultant savings (Policy CO 5.4), and maintain capacity of existing drainage channels, and flood-proof structures to allow 100-year storm flows (Policy Co 5.4, Program 5)."

Title 8 of the development code further specifies that all land use projects "minimize disturbance of erodible areas of any proposed development site (810.0215(a)) and preserve existing streams and drainage courses in their natural conditions (810.0215(b))." For runoff control, Title 8 requires control to prevent erosion, are adequate to control runoff from a 10-year storm (810.0225), and discharge of runoff water over non-erodible surfaces or at a velocity that will not erode in cases where permeability rate is less than 2 inches/hour and when the runoff rate must exceed the predevelopment level (810.0225 (b)).

The San Bernardino County Hydrology manual was issued 25 years ago, and some of the reference data are obsolete. In the intervening time, data more specific to the Ivanpah site location have become available. As permitted in the San Bernardino County manual, updated or more scientifically pertinent data have been substituted in the analysis. The floodflow analysis for the ISEGS conforms to the intent of the San Bernardino manual. The San Bernardino County manual has provisions for site-specific analyses (such as described in Sections B.4, B.5, B.7, B.8, C.6.4, C.7, C.8, and D.4), and the County staff has advised that they frequently receive and approve floodflow analyses based on site-specific conditions.

A floodflow analysis that produces reasonable flood flow predictions for the project cannot be developed based on the strict application San Bernardino manual for the following reasons:

- The manual prescribes the use of outdated soils maps and precipitation data.
- The manual does not recognize the FEMA method for analyzing alluvial fans.
- The manual provides no rational basis for assessing the infiltration changes induced by the heliostat arrays.
- The manual is based mostly on the non-desert conditions within the coastal Santa Ana River basin.

An analysis based on such deficiencies likely would not pass a critical scientific review by other parties interested in the ISEGS development. Additional justification for the chosen approach to the floodflow analyses is provided in subsequent responses, in particular response BSE-24.

Comment 2 [BSE-2]

Attachment A, Work Scope, Number 3. The scope proposes to develop channel characteristics (cross-sectional dimensions and "other characteristics") into a flood-frequency relationship. Four documents are cited as the source of procedures to accomplish this. Please provide these four documents for review.

Response BSE-2

The four source documents are attached as Exhibits BSE-2A through BSE-2D.

Comment 3 [BSE-3]

During the conference call on January 29, the use of channel characteristics was mentioned as just one supporting calculation, and not the primary method of estimating flood frequency. Please provide a concise list of all of the methods that will be used for establishing flood frequency, with a statement of how each will be used in the assessment (primary, supporting, etc.).

Response BSE-3

The methods that were used for establishing flood frequency are described in work plan Attachments A and B and WYA stormwater report (Exhibit BSE-3). Floodflow frequencies were estimated for the 10-year, 50-year, and 100-year storm events using the following primary or secondary methods:

Mountain Watersheds	
HEC-1 models	Primary
Alluvial Fans	
Channel locations (Attachment A, Task 1)	Primary
Channel uncertainty (Attachment A, Task 2)	Primary
Historical floodflows (Attachment A, Task 3)	Secondary
Sediment transport (Attachment A, Task 4)	Primary
Infiltration characteristics (Attachment A, Task 5)	Primary
Identify precipitation (Attachment B, Task 1)	Primary
Flo-2D model (Attachment B, Task 2)	Primary

The WYA stormwater report contains a description of the study elements in its Section 1.3.1, including the diagram on Figure 1.5 showing the study elements and their relationships.

Comment 4 [BSE-4]

Attachment A, Work Scope, Number 5. Infiltration characteristics will be evaluated using variables such as particle size, water application method (runoff from mirrors), compaction (roads), and use of soil binders. Please provide the assumptions that will be used with respect to vegetation in this analysis. Will it assume no vegetation? If it will assume current vegetation, how will it account for inevitable die off of shaded vegetation – in other words, how will infiltration rates change in the future?

Response BSE-4

The low impact design (LID) with-project infiltration will be based on the assumption of the current vegetation cover within the ISEGS site. Based on a preliminary assessment by Dr. David Groeneveld, a desert vegetation ecologist, significant vegetation loss is not expected from shading or mowing. Furthermore, the impact on infiltration rates is expected to be minimal if some individuals or species were to die off from shading, as other individuals or species will take advantage of the reduced competition for water by using more water. Dr. Groeneveld is continuing to analyze the impacts of shading on vegetation. Although the with-vegetation

condition will represent the baseline for the analysis of the ISEGS, the without-vegetation case has been analyzed. See WYA stormwater report Sections 3.6.3.1 and 3.3.2 (see Exhibit BSE-3).

Comment 5 [BSE-5]

The scope proposes the use of Flo-2D as the surface water flow and sediment transport model. We have confirmed that this model is approved for use by FEMA, and agree that it is acceptable for this analysis. Please provide technical documentation pertaining to the version to be used.

Response BSE-5

The Flo-2D version is 2007.06. A copy of the Flo-2D user's manual is included as Exhibit BSE-5.

Comment 6 [BSE-6]

Attachment B, Approach, Page 2, Paragraph 5. The scope states that the model will be applied to pre-construction conditions, and conditions that will exist during operations. BLM suggests that analysis of a post-operation, de-engineered scenario be considered in order to understand the impacts that the facility will leave on BLM land after it is decommissioned.

Response BSE-6

No separate analysis is required because the post-project condition will be the same as the pre-project condition. The decommissioning will restore the ISEGS site to its pre-project hydrologic condition. The decommissioning will involve removing constructed facilities and restoring the natural land-surface contours, soil-infiltration characteristics, and vegetation.

Comment 7 [BSE-7]

Attachment B, Work Scope, Task 3, Subtask 1. The scope states that the mountain canyons will not be included in the model, but discharge from the canyons will be a boundary input for the model. Please confirm that this is a point input, and not a dispersed/averaged input. How is this discharge estimated without including this part of the basin in the model? Is this input just the water, or the water plus sediment that will be discharging from the canyon?

Response BSE-7

The runoff from the mountain watersheds will be point inflows along the boundary of the Flo-2D model. The runoff is assigned to the model boundary where the mountain channel crosses the model boundary. The inputs include both the water and sediment transport. Streamflows are calculated using HEC-1. The corresponding sediment transport is calculated based on the streamflows and the characterization of the bed sediments. See WYA stormwater report Sections 1.3.2.7 and 3.2.1 (see Exhibit BSE-3).

Comment 8 [BSE-8]

Task 3, Subtask 2. The input data for the model is 10-foot contours in the area upstream of the site, and 2-ft contours within the site. We would like to talk about this, and understand how and

where topography is used within the model. It is understood that topography is used for general slope and flow rate – in this case, on the scale of the alluvial fan, 10 feet is probably fine. But for developing the rills, gullies, and channels (Task 3, Subtask 4), it is not clear how a 10-ft contour is appropriate, since almost all channels are less than 10 feet deep.

Response BSE-8

The available topographic maps are being used to define the larger-scale topographic features of the alluvial fans, and field measurements of channel geometry are have been used to define the smaller-scale topographic features. Two factors were considered in assessing the adequacy of the available topographic information. The first factor is the geographically stochastic nature of large floodflows on alluvial fans: The details of the existing topography are not important to the analysis because these floodflows typically change the topography, except that existing topographic details provide information on the channel dimensions produced by previous floods. These channel dimensions indicate the expected future channel dimensions. The second factor relates to how Flo-2D uses topographical information. The application of Flo-2D to the ISEGS area is based on 200-foot by 200-foot grid cells. The topographic input for a grid cell is the average elevation within the cell, which is defined adequately by the available 10-foot (pixel size) and 10-meter (again, pixel size) topographic maps (DEMs). The channels are superimposed on the model grid by specifying the channel geometry, where the channel-geometry characteristics are derived from the measured dimensions of the existing channels. See WYA stormwater report Section 3.2.2.4 (see Exhibit BSE-3).

Comment 9 [BSE-9]

Task 3, Subtask 3. The scope proposes the use of NOAA Atlas 14 in place of NOAA Atlas 2, and provides justification. In publishing Atlas 14, NOAA stated that it superseded Atlas 2. Therefore, its use is acceptable.

Response BSE-9

BSE acknowledges BLM's concurrence.

Comment 10 [BSE-10]

Task 3, Subtask 3. The scope states that stream gaging data from sites near Ivanpah will be used to develop relations between channel geometry and discharge. A quick review of the USGS stream flow data indicates that there is very little data available. There is one station on an intermittent stream named Carruthers Creek near Ivanpah. In the conference call on January 29, Tim Durbin stated that he has identified several others. Please provide information on the selected sites so that we may access and verify the applicability of the selected streams.

Response BSE-10

Only one known stream gaging site is located within Ivanpah Valley, which is the U. S. Geological Survey (USGS) stream gauging station China Springs Creek near Mountain Pass, California. However, four others USGS stream-gaging stations are located within a radius of

about 110 miles. Those and the Ivanpah Valley gaged watersheds were used in the analysis of historical floodflows. The stream gaging station sites are as follows:

USGS Station ID	Station Number	Distance from ISEGS Site, miles	Record Period, years
09419610	Lee Canyon near Charleston Peak, NV	54	34
10248510	El Dorado Valley tributary near Nelson, NV	38	19
10250600	Wildrose Canyon near Wildrose Station, CA	110	15
10251980	Lovell Wash near Blue Diamond, NV	32	25
10252300	China Spring Creek near Mountain Pass, CA	6	15

Comment 11 [BSE-11]

Task 3, Subtask 5. The scope states that the model results will be compared with the results using the Clark County manual. It is not clear what the text is referring to. The simulations will be compared to results contained within the Clark County manual? The simulations will be compared to other results generated by using methods in the Clark County manual? What is being compared to what, for what purpose?

Response BSE-11

For the five watersheds listed in Response BSE-10 above, a HEC-1 model was developed for each watershed to compute the 100-year floodflows. The results then were compared with the 100-year floodflows estimated from the USGS streamflow data for the watersheds. See WYA stormwater report Section 3.1.2 (see Exhibit BSE-3).

Comment 12 [BSE-12]

Task 4, Introduction. The scope states that the first program to be modeled is a by-pass method – allowing stormwater to by-pass site structures by flowing through the middle in natural channels. The assumption is that this is the preferred method for stormwater management at the site. We agree that this is the preferred method, if it is possible. The problem is – if we are assuming that the channels inflowing into the upstream side of the site are likely to move randomly, how do we design to allow for lateral movement of channels? If we had confidence that an individual channel would stay in place, then we would agree that the impacts of that channel on the site around it would need to be estimated. But the biggest question, in this situation, is not the impact of water flow within that channel, but what are the impacts when the water flow leaves that channel and enters the site at a different point?

Response BSE-12

Flood protection and flood proofing will be designed with the expectation that a channel can move so as to direct floodflows toward any facility. This is the essence of the FEMA approach to identifying flood risks on alluvial fans. The flood proofing for the heliostats will be designed with the expectation that a channel can move within the heliostat arrays. Heliostat pylon depths will be extended to a depth sufficient to account for the potential lateral movement of channels. See Exhibit BSE-12. Likewise, the flood protection for the power blocks, administrative area, and substation will be designed with that expectation.

Comment 13 [BSE-13]

This section discusses the trade-off between protection costs and "damage costs." For instance, Subtask 3 reads "Whether this is a reasonable design criteria depends on: (1) the tradeoff between the flood-proofing and damage costs and (2) the significance of the production disruption resulting from damage."

In general, we agree that the system should be selected on this basis. In order to do it correctly, we need to jointly develop an understanding of the complete definition of "damage costs". For example, with respect to the above statement, production disruption could be considered to be one component of "damage costs". Damage costs should include the following, at a minimum:

- Cost to replace damaged facilities
- Losses due to production disruption
- Costs to repair/mitigate impacts that have occurred to downstream facilities and resources

The analysis should include all three of these components as factors to be considered. Even if downstream impacts are thought to have low costs to mitigate, they still must be assessed for the EIS.

Response BSE-13

An economic analysis most likely will not be done because it is beyond the scope of BLM's environmental assessment requirements as defined in the National Environmental Policy Act (NEPA). The current intention is to design flood protection and flood proofing for the ISEGS based a 100-year event. However, if a different return period were to be used, the analysis would consider all the elements listed in the comment.

Comment 14 [BSE-14]

Task 4, Subtask 3. The scope states that a management plan will be developed. BLM would like to review and comment on the full contents of this plan. As mentioned in the scope, it seems to address only facility-protection. This plan, or other plans, is expected to also address sediment management (if an active system is selected), system inspection and maintenance, and plans for response to downstream impacts.

Response BSE-14

To standards of regulatory compliance under the Federal Water Pollution Control Act (also referred to as the Clean Water Act), a Drainage, Erosion, Sedimentation Control Plan (DESCP), a Construction Stormwater Pollution Prevention Plan (SWPPP), an Industrial SWPPP, and a Water Quality Management Plan (WQMP) will be developed.

The Draft DESCP that was referred in Attachment A, Task 3, as the management plan has been published as a separate document (see Reference 1). The draft plan addresses most of the issues mentioned in this comment. The final DESCP will be developed during the project design and will be designed by the engineering-procurement-construction (EPC) contractor and will address all of the issues mention in Comment BSE-14.

The Draft Construction SWPPP has been published as a separate document (see Reference 2). The draft plan specifies Best Management Practices (BMPs) that will prevent construction pollutants from contacting stormwater, and keep non-stormwater discharges and products of erosion from moving offsite into receiving waters. The draft plan includes a regular BMP inspection and maintenance schedule. As the final DESCP, the Construction SWPPP will be finalized by the EPC contractor.

The Industrial SWPPP will address non-stormwater discharges during facility operations, and include a regular monitoring schedule of stormwater discharges and authorized non-stormwater discharges, if any. The WQMP will provide detail on the site's post-construction BMPs (site designs that reduce runoff and pollutant transport, source-control, treatment-control) that address potential pollutant loads and potential effects of changes in hydrology on streambeds. This plan will include a regular inspection schedule and a maintenance contract, in perpetuity. The overall details of both these plans are still being developed. Upon evaluation of the hydrology model data and the available control methods for the project, the CEC and BLM will be consulted prior to drafting the Industrial SWPPP and WQMP.

The overall details of the stormwater management are still being developed and at this time it is premature to generate the stormwater management plan. However, following the evaluation of the hydrology model data and the available control methods for the project, this document can be initiated. A draft of the proposed table of contents and planned discussions will be prepared and submitted to the CEC and BLM for input prior to development of the plan.

Comment 15 [BSE-15]

Please provide a map of conceptual boundaries of each proposed model (i.e. hydrologic and hydraulic), list of model parameters, and calibration/verification methodology for hydraulic/sediment transport model.

Response BSE-15

The map showing the limits of the proposed models is contained within WYA stormwater report as Figure 1.6 (see Exhibit BSE-3). The model parameters for the mountain-watershed HEC-1 models are the following: (1) watershed area, (2) SCS soil hydrologic group classifications,

(3) SCS curve number associated with soil classifications, (4) lag time, (5) precipitation, and (6) precipitation area-reduction factor. The model parameters for the alluvial-fan model (Flo-2D) are the following: (1) soil classifications, (2) curve number, (3) topography, (4) channel locations and geometry, (5) hydraulic roughness for overland flow, (6) hydraulic roughness for channels, (7) precipitation, and (8) channel-bed and overland-flow-area sediment particle-size distribution.

Data are not available for the ISEGS site to calibrate either the HEC-1 or Flo-2D models for floodflows or the Flo-2D model for sediment transport. However, as described in Response BSE-11 and in the WYA stormwater report Section 3.1.2 (see Exhibit BSE-3), the performance of the HEC-1 model was evaluated with respect to five USGS gaged watersheds within the region surrounding Ivanpah Valley. The evaluation represents a check on the HEC-1 model for the combined effects of storm depth and pattern, depth-area reduction factor, curve number, and unit hydrograph. Using either the San Bernardino County or Clark County parameters, the HEC-1 overestimates the 100-year floodflow, but the Clark County parameters result in less of an overestimation. See WYA stormwater report Figure 3.1 and Table 3.3 (see Exhibit BSE-3).

COMMENTS/OBSERVATIONS, ISEGS STORMWATER – PRELIMINARY ANALYSIS OF INFILTRATION FOR SELECTED LAND SURFACE CONDITIONS

Comments on *ISEGS Stormwater – Preliminary Analysis of Infiltration for Selected Land Surface Conditions* provided by Mr. Raymond Lee of BLM to Ms. Alicia Torre of BSE on February 20, 2009, reference 2800P, CACA-48668. A copy of the Preliminary Analysis is included as Responses to comments from BLM on these documents follow.

Comment 1 [BSE-16]

BLM would like to confirm the overall purpose, and intended use, of the calculations. Most of the recent group conversations with Tim Durbin have focused on modeling of the stormwater flow that will be approaching the facility from the upstream basin. Therefore, when we received this calculation of infiltration on the site itself, we reviewed it in that context – but it really appears to not be directly related to that issue. For instance, please confirm that the calculation methodology and results are used only for the ROW area itself and not for any areas upstream of the site.

Response BSE-16

The infiltration modeling applies only to right-of-way (ROW) areas within the ISEGS site. The purpose of the infiltration modeling was to identify the percentage change in the runoff due to the impact of the project construction and operational activities. Using the Flo-2D model, the runoff for the pre-project condition was calculated by using an appropriate curve number. The runoff for the with-project condition was derived by adjusting the pre-project curve number according to the results of the infiltration modeling. See WYA stormwater report Sections 1.2.2 and Figure 1.5 (see Exhibit BSE-3).

Comment 2 [BSE-17]

If the purpose is not to directly support the upstream flow analysis, then please confirm what the purpose is. Is it to calculate the pre- and post-development runoff volume to support sizing of stormwater management basins in compliance with the San Bernardino County Hydrology Manual? Is it to perform sensitivity analysis on the compaction, vegetation removal, and dust suppression issues so that we understand these impacts? Is it to provide a "second component" of the overall flow model – with the upstream basin analysis being done with one method, and the contributing portion from the ROW being done differently? Any or all of these are fine – we just wish to understand the exact purpose and intended use of the methodology and calculation results.

Response BSE-17

The purpose of the infiltration modeling is as described in Response BSE-16. The infiltration model is used to identify the percentage change in the curve number for the heliostat areas within the ISEGS site. The infiltration modeling facilitates identifying the curve-number change for the with-project condition by considering the potential impact of the project on: (1) antecedent moisture conditions, (2) hydraulic roughness of the land surface, and (3) soil hydraulic conductivity resulting from compaction of soil. The infiltration model is part of the overall modeling, which additionally includes the HEC-1 models and the Flo-2D model.

Comment 3 [BSE-18]

As discussed in the conference call on February 17, the sensitivity analysis should also include the effect of dust suppressants.

Response BSE-18

A sensitivity analysis is not required because the floodflow analysis was based on the assumption that the applicable roads are impervious, with or without the application of a dust suppressant. The use of dust suppressants will be limited to the dirt access roads that extend diagonally out from each power block through the solar fields. The use of a dust suppressant will decrease the infiltration into the soil, but these roads already are considered in the floodflow analysis to be impervious, so the application of the dust suppressant will not change the modeled infiltration. Suppressants are not anticipated to be used on the service pathways between the circular heliostat rows. Nevertheless, were they to be required on the pathways, a suppressant would be used that does not change the soil infiltration characteristics.

Comment 4 [BSE-19]

The analysis included an assumption that compaction of roads only includes two 12-inch wide tire tracks in a 6 foot wide vehicle pathway. Even given the stated scenario that the only vehicle traffic would be a single mirror wash truck/tractor every two weeks, this assumption is problematic – the trucks will not follow the same tire tracks, and rutting will occur that may require active road maintenance. Even more substantial disturbance would be expected during the construction process during installation of heliostat supports, communication control systems, and transporting and installing mirrors. It seems likely road maintenance with heavy equipment is likely to be

required for access to many areas. Although it was stated on our call that the compaction assumptions made little difference to infiltration capacity in the runoff calculations, we feel it is misleading to represent these vehicle pathways as described in the memorandum. Before using this assumption in the analysis, it is recommended that a more general understanding of the entire scope of site disturbance during construction and operations is reached.

Response BSE-19

The updated project description, which is attached as Exhibit BSE-19A, describes the vehicle traffic that will be associated with the project. Also attached as Exhibit BSE-19B is a schematic traffic map showing the traffic during construction. Based on the project description, the compaction assumptions have been modified to represent a larger pathway and to take into consideration the entire scope of site disturbance during construction and operation. Instead of the two 12-inch-wide tire tracks in a 6-foot-wide vehicle pathway, the analysis now assumes 10 feet wide pathways with a compacted thickness of about 1 foot on the entire pathway. The infiltration modeling was based on an assumed 50-percent reduction in the soil hydraulic conductivity within width and depth of compaction. This is a conservative assumption because the infiltromenter data indicate a 30-percent reduction, and John Bosche (see Exhibit BSE-19C) indicates not more than a 40-percent reduction. See WYA stormwater report Sections 3.5.3 .2 , 3.5.3.3, 3.6.3.1 and Figure 3.24 for additional information on soil compaction (see Exhibit BSE-3).

The compacted zone is consistent with the project plan and traffic map, and the assumed change in hydraulic conductivity is conservative. Based on soil characteristics and the expected vehicle traffic, John Bosche, a civil and geotechnical engineer with extensive experience in civil projects on desert lands, concluded that the expected decrease in hydraulic conductivity beneath the service pathways will be considerably less than 40 percent (see Exhibit BSE-19C). See WYA stormwater report Section 3.5.3.2 and 3.5.3.3 (see Exhibit BSE-3).

The project description provides a general description of the entire scope of the ISEGS disturbance during construction and operation. The procedures for construction of the heliostat arrays are explained in the project description. The heliostat installation includes these activities: (1) pylon driving into the ground on predetermined global positioning system (GPS) positions, (2) installation of heliostat assembly on the pylon, and (3) installation of cables (underground along the asphalt road and three additional main diagonal roads and above ground between heliostats). The pylons will be inserted along each pathway, while the heliostat assembly on the pylons will be installed using a crane positioned every fourth row. The cables between heliostats are supplied to the site prefabricated to dimension, and they will be installed manually. During these activities, the vehicle and foot traffic will strictly follow the diagonal roads and the service pathways. Every piece of equipment (light or heavy) will enter the site through the main gate, will drive on the perimeter road, will enter one of the three diagonal roads, will follow one service pathway, and will exit on the following diagonal road. All cars and equipments will be highly maneuverable over rough terrain, so no grading or site preparation will be required, except for places where deep washes must be traversed or in small identified areas (see design drawings) with extremely uneven topography. Construction staff will be trained to follow strict protocols for vehicle and foot traffic and remediation of unintentionally affected areas.

Comment 5 [BSE-20]

Please provide all existing information related to the infiltration samples, including sample locations, photographs, field descriptions of locations and soil types, and infiltration test results. The numbers and locations of these samples may not be sufficient to provide a statistically significant characterization of the two different areas being assessed. Three samples were collected on roads, but the nature of that road may not be representative of the roads that will eventually develop. Four samples were collected to characterize undisturbed areas – that is a limited number. Please provide justification, including distribution plots of the infiltration test results, supporting whether the use of four samples to characterize one area, and three samples to characterize another area, represent a log-normal probability distribution.

Response BSE-20

The following information are attached as Exhibit BSE-20: (1) map showing location of sampling sites, (2) results of particle-size analyses, (3) field data for infiltrometer test, (4) graphs showing the fit of the infiltrometer results to a log-normal probability distribution, and (5) photographs.

With respect to the comment about a log-normal distribution, the geographic distribution soil hydraulic conductivity has a log-normal distribution. The graphs comparing the field data with a log-normal distribution indicate a close fit. However, that is not an unexpected result. The hydrologic literature describes many hydrologic processes that are characterized by a log-normal distribution. See WYA stormwater report Section 3.5.3 (see Exhibit BSE-3).

With respect to the comment about the sample sizes, the sample sizes are adequate for the intended use of the data. The data were collected to characterize the general geographic variability of the soil hydraulic conductivity within the heliostat arrays in terms of the underlying probability distribution, where the probability distribution is an input to the infiltration modeling.

The estimated distribution parameters contain uncertainty, but the uncertainty has no significant impact on the purpose of the infiltration modeling. This is the case because infiltration model simulations were run for a range of hydraulic conductivity (see WYA stormwater report Section 3.6.3.2) in order to develop a relation between hydraulic conductivity and runoff and then to develop a cumulative distribution of runoff, where the cumulative distribution of runoff is based on the cumulative distribution of hydraulic conductivity and the relation between runoff and hydraulic conductivity. Selecting an alternative form of the cumulative distribution (within in the range indicated in WYA stormwater report Section 3.5.3.1) would only a minor impact on the cumulative distribution of runoff. That impact is reduced further because the infiltration model is used in a comparative mode (pre-project and with-project), where both parts of the comparison use the same cumulative distribution of hydraulic conductivity. Correspondingly, the uncertainty in the cumulative distribution of hydraulic conductivity is in effect removed in the comparative result, where the output from the comparison is the percentage change in the SCS curve number between the pre-project and with-project condition.

With respect to the impacts of vehicle traffic within the heliostat arrays, the infiltrometer data on natural and roadway soils indicate a 30-percent lower hydraulic conductivity for roadways compared with natural soils. This value is based on tests on existing unimproved roadways that have been used by recreational off-road vehicles for many decades. By conducting a geotechnical analysis based on sandy soil texture and the expected vehicle traffic within the ISEGS site, John Bosche concluded that the expected decrease in hydraulic conductivity beneath the service pathways will be considerably less than 40 percent, as indicated in Response BSE-19. An ongoing review of the scientific literature regarding vehicle impacts on desert lands suggests similar impacts due to off-road traffic. Furthermore, the literature indicates that soil impacts decrease with depth, where the impacts tend to be minimal at depth of about 1 foot. See WYA stormwater report Section 3.3.3.3 (see Exhibit BSE-3).

The service pathways within the heliostat arrays are represented in the infiltration model by a zone of reduced soil hydraulic conductivity due to soil compaction. The compacted zone is 10 feet width and 1 foot thick. The width corresponds to a travel width between heliostat rows of about 14 feet (with mirrors in a horizontal or near-horizontal position) and a minimum 24-inch clearance between a mirror and vehicle. The thickness corresponds with the typical depth-effects reported in the scientific literature. The hydraulic conductivity assigned in the infiltration model to the compacted zone is 50 percent of that for the adjacent and underlying soils. The assigned hydraulic conductivity is lower than that indicated by the infiltrometer test and the analysis by Mr. Bosche. See WYA stormwater report Sections 3.5.3.2, 3.5.3.3, 3.6.3.1 and Figure 3.24 (see Exhibit BSE-3).

Comment 6 [BSE-21]

Antecedent Soil Moisture Conditions. While the effect may be small, please provide a citation to the source used in the assumption that soil is drier near a plant than it is in areas where there are no plants. Plant-soil systems are complex with root systems changing the characteristics of soils. In addition, plants provide shade, which can lower soil temperatures and thereby reduce the evaporation potential in the soil.

Response BSE-21

No assertion was made about the distribution of the particular soil-moisture condition near a plant, and no citation can be offered. What was said is that the soil moisture within a vegetated area will be lower than for the same area without vegetation (see WYA stormwater report Section 3.6.3.1 for discussion of vegetation impacts on soil moisture (Exhibit BSE-3)). However, if only some vegetation is removed, the soil moisture most likely will be the same with or without the partial removal. This occurs because the removed vegetation reduces the competition for the remaining vegetation, and the remaining vegetation uses the soil moisture that otherwise would have been consumed by the removed vegetation. This phenomenon applies also to shading effects. On one hand, shaded vegetation might consume less water, but that again reduces the competition for nearby unshaded or less-shaded vegetation. On the other hand, shaded vegetation might have a longer non-dormant period, which could result in the same soil-water consumption as for unshaded vegetation with a shorter non-dormant period. These factors are under study by Dr. David Groeneveld, who was mentioned in Response BSE-4 with respect to vegetation ecology.

COMMENTS/OBSERVATIONS
IVANPAH SEGS STORMWATER MANAGEMENT APPROACH AND TECHNICAL MEMOS

Comments on ISEGS Stormwater Management Approach and Technical Memos provided by Mr. Raymond Lee to Mr. Todd Stewart of BSE on April 8, 2009, reference 2800, CACA-48668/2800 (CAC-690.1) Responses to comments from BLM on these documents follow.

Comment 1 [BSE-22]

1) Information Needed to Assess Appropriateness of Low Impact Development Scenario: In general BLM agrees that a Low Impact Development design is preferable to an active stormwater management system, if it can be demonstrated that the proposed development is designed to withstand erosion forces which could impact the feasibility of site operations; result in transportation of damaged materials (heliostats and their components) outside of the site boundary; and/or result in modification of stormwater erosion and deposition characteristics outside of the site boundary.

Based on verbal information provided during the March 25 meeting, the current stormwater flow calculations have been used to modify the proposed depth of installation of heliostat supports from four feet to five feet. In order to be sufficient to avoid the impacts mentioned above, this depth must account for three factors:

- Depth sufficient to support the weight of the heliostat, including accounting for wind pressure;
- Depth sufficient to account for depth of scour associated with each support; and
- Depth sufficient to account for natural erosion associated with lateral migration of channels.

BLM has two primary comments associated with these factors. First, each is a function of the calculated stormwater flow depth and velocity, so agreement on these calculations is required before the sufficiency of the heliostat stability can be demonstrated. Specific comments on the velocity and depth calculations are provided in Comments 2 through 9 below.

Response BSE-22

The heliostat pylons will be designed to resist design flood depths (including scour), flood velocities, and wind pressures. The design will consider the probability distribution for the joint occurrences of flood and wind events. Exhibit BSE-12 provides a copy of the preliminary scour analysis.

Comment 1 [BSE-23]

The second concern is that the proposed depth of five feet appears to address the first two items, but not the third (lateral migration of channels). There are some channels present, which are

more than five feet deep, and there are many more that are one to two feet deep. It is not clear whether the proposed five foot depth would be sufficient should a natural erosion event result in lateral migration of a one to two-foot deep channel. Before the Low Impact Development proposal can be accepted, these two items must be addressed. Agreement must be reached on the stormwater flow calculations, and the design of the heliostat supports to account for channel migration must be demonstrated.

Response BSE-23

The design of the heliostat pylons will consider that a floodflow can occur along any path through a heliostat array. The embedment depths discussed in previous meetings or conference calls were based on a preliminary analysis. The actual depths will be based on the final floodwater analysis. The embedment depth will be identified to resist the overturning moment caused by flowing water and wind, given a specified channel erosion and local scour.

Comment 2 [BSE-24]

2) (a) Antecedent Moisture Condition used for Both Pre- and Post-Development Calculations: TM2 and TM6 present the 100-year design storm runoff calculations for the pre- development and post-development scenarios, respectively. The Curve Numbers used for both calculations are based on the Antecedent Moisture Condition (AMC) II. In the San Bernardino Manual (Section C.5, the Curve Number obtained from the soil maps is to be adjusted based on the precipitation scenario being evaluated. The text states that "For 100-year storm analysis, AMC III shall be used."

This would require an adjustment of the Curve Number obtained from the soil type maps using the Curve Number Relationships in Table C.1 of the San Bernardino Manual. Using this Table, the corresponding Curve Numbers to be used for soil type A would be adjusted from 63 to 82, and the Curve Numbers to be used for soil type B would be adjusted from 77 to 92. The Curve Numbers for the mountain sub-basins would increase from their current values of 81 to 88 to correspondingly higher values between 94 and 98.

(b) While BLM has approved the use of portions of the Clark County Manual related to the randomness of channel switching on alluvial fans, the San Bernardino Manual is to be complied with in all other respects. Please modify the calculations accordingly.

Response BSE-24

(a) The stormwater analysis is based on AMC II instead of AMC III for two reasons:

Firstly, the Clark County hydrology manual provisions are used instead of those for San Bernardino County because the Clark County provisions better represent actual conditions within Ivanpah Valley than do the San Bernardino County provisions. This was determined by evaluating the results obtained respectively from the two hydrology manuals. For the five watersheds listed in Response BSE-10 above, a HEC-1 model was developed for each watershed to compute the 100-year floodflows. The HEC-1 results then were compared with the 100-year floodflows estimated from the USGS streamflow data for the watersheds. The comparison results are that the application of the San Bernardino manual overestimates the

100-year peak floodflows by 180 percent and the application of the Clark County manual overestimates the peak floodflows by 70 percent (see WYA stormwater report Section 3.1.2 (see Exhibit BSE-3)). While both manuals result in an overestimation, the Clark County manual more closely represents actual conditions for the ISEGS site.

Secondly, the BLM and CEC encouraged and approved using a FEMA floodflow analysis for the ISEGS (see Comment BSE-1). Based on that approach, the AMC III antecedent-moisture condition has no applicability. A 100-year event on the alluvial fan always correspond to less than a 100-year floodflow discharge at the alluvial-fan apex. Because the flood-discharge event is less than a 100-year event, the provision in the San Bernardino County manual for applying AMC III conditions does not apply. The FEMA guidelines and an adjunct publication are attached as Exhibits BSE-24A and BSE-24B.

A fundamental aspect of the FEMA method is to consider both the probability of a particular flood event and the probably that the floodflow will follow a particular path on the alluvial fan. Based upon those considerations, FEMA has developed guidelines for determining the 100-year flood on alluvial fans. The FEMA guidelines are being followed for the assessment of alluvial-fan flood hazards within the Ivanpah power plant site. The guidelines consider that the floodflow in a particular year is uncertain and that the floodflow path is uncertain. The overall probability of a particular flood magnitude (event A) intersecting a particular point (event B given event A) is the product P[A]xP[B], where P[A] is the probability of a particular flood discharge and P[B] is the probability that the flood discharge will intersect a particular location. The probability P[A] is the flood-frequency relation, which typically is characterized by a Log-Pearson Type II probability function. The probability that the discharge will occur at a particular point is the streamflow width (or the facility width, if greater) divided by the width across the alluvial fan that the floodflow can occur.

For a numerical example, consider the probability that a 100-year floodflow at the top of the alluvial fan will impact a particular location on the fan. For this case, P[A] = 0.01, which is the probability of the 100-year discharge. Additionally, consider that the floodflow path can occur anywhere across the alluvial fan within a width of 1,000 ft. Then, assume the streamflow width is 50 ft. Therefore, the probability of the floodflow occurring at a particular location is 50 divided by 1000, or P[B] =0.05. Correspondingly, the overall probability is P[A]xP[B] = 0.0005, which represents a 2000-year event.

A 100-year event on the alluvial fan would correspond to a floodflow at the top of the alluvial fan that was much less than a 100-year event. For simplicity, assume that the probability P[B] is unchanged from the previous example. Then, if the overall probability is 0.01, the probability at the top of the alluvial fan is P[A] = 0.01/ 0.05 or 0.2, which is the equivalent of a 5-year floodflow. In other words, a 5-year floodflow at the top of the fan corresponds to a 100-year flood event on the alluvial fan. This is a simplified example but the FEMA guidelines provide the particular calculations for determining 100-year events on an alluvial fan. The San Bernardino County manual and the FEMA guidelines are totally incompatible.

(b) As indicated above, a floodflow analysis that produces reasonable estimates of the flood flows at the project site cannot be developed based on the strict application San Bernardino manual. The floodflow analysis used for the project meets the intent of the San Bernardino

County manual and utilizes site-specific data in conformance with Sections B.4, B.5, B.7, B.8, C.6.4, C.7, C.8, and D.4 of the manual.

Comment 3 [BSE-25]

3) Depth-Area Reduction Factor (DARF) used for Both Pre- and Post-Development Calculations: In TM2, a rainfall Depth Area Reduction Factor (DARF) of 0.89 was applied to all 15 watersheds, based on the total 21.7 square mile area of the combined watersheds. The TM cites that this "was determined using NOAA Technical Memorandum NWS Hydro 40 as required by Clark County." Actually, Clark County requires use of the 6-hour USACE, Los Angeles District (1988) depth-area reduction factors for all rainfall analysis in the Clark County area. The values to be used for this analysis should be those from Table 502 of the Clark County Manual.

Also, the manner of determining the DARF by using the combined areas of the separate watersheds is not an accurate method for determining the HEC-1 flow output at each sub-basin concentration point. Instead, the area of the each individual sub-basin should be used for each individual sub-basin calculation. For example, the DARF that should be applied to watershed MI is about 0.97, not 0.89.

Response BSE-25

The Clark County manual Table 502 has been used for the DARF. However, the DARF is not based on the 15 individual basins. Instead, the factor is based on the aggregation of adjacent basins that collectively contribute floodflow to particular regions of the ISEGS site. The Clark County manual describes this approach in Sections 507.1 and 507.2, and the San Bernardino County manual describes a similar approach in Section K.3.iii. The DARF's from the Clark County manual were applied because the hydrologic conditions within Ivanpah Valley are much more correlated with those in Clark County and the generalized desert conditions with San Bernardino County. Although the San Bernardino manual is based mostly on non-desert conditions, the Clark County manual focuses on desert conditions. See Response BSE-24.

Comment 4 [BSE-26]

4) Proposed Use of ad-hoc Infiltration Calculations to Replace the San Bernardino County Manual Method. The purpose for these calculations, as stated in the original workplan, is for the results to be "incorporated into a model of soil-water flow to assess the significance of roadways, heliostats, and soil binders on the effective infiltration over the BEGS site". In written comments on the initial Infiltration Memo provided by BLM on February 20, (Comment #2), BLM requested clarification of the intended use of the infiltration calculations. The additional information provided in TM3 and TM7 still do not specifically present how the infiltration calculation results would be used within the proposed stormwater management system design. However, the intention became clear during the March 25 meeting -the intention appears to be for these calculations to replace the procedures required by the San Bernardino County Manual to calculate the increase in runoff due to site development.

Again, the only deficiency in the San Bernardino County Manual that has been discussed with BLM is the lack of an alluvial fan methodology to account for random channel switching. There has been no discussion of deficiencies in its manner of addressing Curve Number adjustments for the post-development condition.

Based on these observations, BLM suggests the following resolution:

- BrightSource should perform the calculations of the pre- and post-development runoff condition using the procedures in the San Bernardino County Manual. BLM staff are available to jointly discuss and come to agreement on specific assumptions, including the proper Antecedent Moisture Condition (AMC) to use, appropriate Curve Numbers for the post-development condition, the precipitation model to use, and the effect of the presence of mirrors on the precipitation model. For assumptions and parameters for which there is uncertainty. BLM will require that conservative assumptions be used to ensure any potential impacts are identifiable.
- If the methodology presented in the San Bernardino County Manual is technically inaccurate for the situation at Ivanpah SEGS, then BrightSource should present a memo that provides detailed information regarding the deficiency, and a recommended solution. This memo should also reference supporting information from the manual regarding the use of alternative methods, if such information exists.
- Because we expect the calculation to be performed using the San Bernardino County Manual method, we do not have detailed comments on the infiltration calculations at this time. Some observations are provided in Comment #5 below, but these should be considered preliminary and incomplete.

Response BSE-26

The infiltration calculations fit the intent of the San Bernardino manual, which is to provide appropriate flood protect within the County. This has been accomplished by developing the infiltration model. The infiltration modeling incorporates the site specific information and analysis required by the San Bernardino County manual to be included in the site-specific curve number determination. For the complex hydrologic changes associated with project, the infiltration modeling is an allowed essential adjunct to either the San Bernardino County or Clark County manuals (see San Bernardino County manual Sections C.7 and K). Infiltration modeling provides a site-specific method to accurately assess the impact of the project on the curve number assigned within the heliostat arrays. While SCS curve numbers are tabulated for various land classifications in the San Bernardino County manual, Clark County manual, SCS TR-55,and other publications, none of these sources include a classification even remotely corresponding to that created by the ISEWGS heliostat array

Comment 5 [BSE-27]

5) Difference in Pre- and Post-Development infiltration Rates: If use of site-specific measurements is ultimately approved, then there are still questions regarding the applicability of the current infiltrometer sample results. Numerous issues exist regarding the current sample results:

- BLM requested data regarding these samples in Comment #5 of our comments dated February 20, and only some of the information was provided. BLM requested photographs, field descriptions of the locations and soil types, and raw field data that was used to calculate the steady rates presented on Page 3 of TM3. The information provided for the March 25 meeting included photographs, but no field descriptions or field data.

Response BSE-27

See Response BSE-20.

Comment 5 [BSE-28]

- The issue is not whether seven samples are enough, since these samples are trying to characterize two different conditions. There are only four samples to represent one condition (pre-development) and three to represent another condition (post- development).
- The pictures show that one of the post-development samples is in a disturbed area near a water pumping system -this site may have had excavation and backfill, instead of just traffic. This may reduce the number of usable post-development samples to two.
- One of the pre-development samples is not located within the site boundaries.

Response BSE-28

See Response BSE-20.

Comment 5 [BSE-29]

- Of the three locations where both a natural and a compacted measurement were made, two of them show an expected result - the infiltration rate in the natural location is higher than that of the compacted location. However, Site 1 results show that the infiltration rate at the compacted location (9.06 ft/day) is substantially higher than the corresponding natural location (1.62 ft/day).
- The range of results from the four pre-development samples shows substantial variation across the site. The results range from 1.62 to 24.61 ft/day. This is a very wide variation that may not characterize the site through calculation of a mean based on four samples.

- The transcription of some numbers from the steady-state field results to their use in the infiltration model appears to be incorrect. From TM3, the steady-state infiltration rates for Location 1 (Natural), Location 3 (Natural), and Location 4 (Natural) are reported differently in the table on Page 6 versus their corresponding field results shown in Figures 2.4A, 2.4D, and 2.4F. Using Location 3 (Natural) as an example, the steady-state infiltration rate reported on Figure 2.4F is read from the graph to be about 17.5 inches/hr. This translates to 35 ft/day. However, the value reported on the Table on Page 6 of TM3 is 24.61 ft/day. Overall, 4 of the steady-state infiltration rates reported in the table on Page 6 match the results reported in their corresponding figures, while results for 3 of the samples do not match. The use of the incorrect values in the table results in underestimating the difference in pre- and post-development infiltration rates, and thus underestimating the hydrologic impact of the development.

These observations indicate that the current limited sample results cannot be accepted as representative of the very large areas being characterized. As discussed in Comment #4, BLM expects this calculation to be performed in the manner of the San Bernardino County Manual. Should the need to use site-specific sample results to replace the Manual method be agreed upon by the agencies, then a revised sampling program will need to be implemented.

Response BSE-29

See Response BSE-20. Editorial errors have been fixed. The purpose of the sampling is to develop a probabilistic characterization of the geographic distribution of infiltration rates within the ISEGS site. The rates are distributed log-normally, and the parameters of that distribution are the log mean and variance. The certainty in the parameter estimates can be calculated based on the sample size and variance, and an assessment of that certainty is described in the WYA stormwater report Section 3.5.3 (see Exhibit BSE-3). The ultimate question regarding that uncertainty is how it impacts the assessment of the change in the curve number assigned to the with-project condition. That impact is discussed in BSE Response 20 and WYA stormwater report Section 3.5.3.

Comment 6 [BSE-30]

6) Infiltration Rate Determination on the Access Roads: TM6 discusses the use of the 10 percent increase in Curve Number for the site access roads, based on the results of TM4. The 10 percent increase was an area-weighted average derived in TM4 based on a combination of two effects - the infiltrometer results that indicated an 80 percent reduction in conductivity on the service paths, and the percentage of the overall site which would be covered by service paths.

TM6 uses this 10 percent increase in Curve Number directly for the access roads, then applies the value for a 12-foot wide access road to an entire 200-by-200 foot cell, and then claims that this application is conservative. Since the 10 percent increase was an area- weighted value in the first place, applying it over a larger area does not, in itself, make its use conservative. In fact, we do not know whether it is a conservative calculation or not, since we do not know the compacted/non-compacted ratio in each individual cell. The calculation may be conservative in

some cells, and not conservative in others. To be conservative in the manner implied in TM6, the calculation should use the 80 percent infiltration reduction over the entire 200-by-200 foot cell.

Response BSE-30

The statement regarding an 80 percent reduction in infiltration is a typo. The actual value is 50 percent, as indicated in Response BSE-20. The increase in the curve number is applied to the entire cell. However, the increase in the curve number for the entire cell corresponds to effective composite curve number for the compacted and uncompacted areas within the heliostat arrays.

For the preliminary model described in WYA TM6, the gravel roadways (not the service pathways) were assumed to increase the curve number within a Flo-2D cell by 10 percent. This was used in the model as convenience conservative assignment, which has been replaced in the final version of the model. In that version, a 12-foot gravel roadway will occupy 6 percent of a model cell. Assuming that the roadway has CN = 98 and the remainder of the cell has CN = 65, the area-averaged result is CN = 67, which is 3 percent greater than the without-road condition. Therefore, the 10-percent increase is conservative. However, the curve-number assignment in the preliminary model has been replaced in the final model with the actual area-weighted value. See WYA stormwater report Section 3.3.1 (see Exhibit BSE-3) on how curve numbers were adjusted to represent the with-project condition.

Comment 7 [BSE-31]

7) Infiltration Rate on the Intra-Field Heliostat Areas: The current stormwater flow calculations assume that the only areas in which compaction would result in modified infiltration rates are the power block, administrative areas, access roads, and service pathways between heliostats rows. BLM is currently reviewing TM6, and expects to have comments on the specific assumptions regarding the Curve Number and configurations of these features.

This particular comment concerns the treatment of the other areas of the site -the areas between and amid the heliostats, which are not included within the power block, administrative areas, access roads, and service pathways. Construction efforts in these areas will include: driving vehicles to deliver personnel and materials; use of equipment to cut vegetation and install heliostat supports; removal or rocks and undefined “light- grading” in some areas; and equipment and foot-traffic to install heliostat wiring conduits. The current calculations assume that these activities will have no long-term impact on drainages, vegetation, and infiltration rates in those areas. It also assumes that the current proposal to perform all of this construction without more aggressive grading and road maintenance is feasible.

The assumption that these activities will have no long-term effect on drainages, vegetation, and soil infiltration rates is not supported by information currently provided in the Project Description (see Exhibit BSE-19A). Some necessary information is not provided, such the wheelbases of the vehicles and equipment: the pressure exerted by the tires, the locations of trios, and the numbers of trips. Other information is provided but is not believable - for instance, the proposal to cut vegetation to provide clearance for equipment, and then to shade the vegetation with heliostats, does not support an assumption that long-term vegetation effects on runoff will be negligible.

Currently, these calculations are entirely based on best-case assumptions that are not supported by any provided data. In addition, many of the assumptions, such as the assumption that construction vehicle traffic will not compact soils or affect drainages, are counter-intuitive. Should these assumptions prove incorrect, the entire Low Impact Development scenario may be unworkable. These calculations should be re-done using more conservative assumptions to determine whether the Low Impact Development scenario is still a feasible option.

Response BSE-31

The project description provides information about the wheelbases of the typical vehicles and equipment, and the numbers of trips (see Exhibit BSE-19A).

A simulation was made using the assumption that all vegetation would die or be removed within the heliostat arrays (see WYA stormwater report Section3.3.2 (Exhibit BSE-3)). The simulation involved adjusting the hydraulic roughness of the land surface and the antecedent moisture conditions. For the simulation it was assumed that the loss of vegetation would increase the runoff volume from the project site by 5 percent. This is a conservative assumption because the infiltration modeling that was performed to assess the project's impact on infiltration indicated that the loss of vegetation would have a negligible impact to infiltration rates. The results of the simulation indicate that the low-impact approach to stormwater management works with the unlikely loss of all vegetation. Simulations have also been made using the with-vegetation assumption, which is the most likely condition with the project (see Exhibit BSE-3).

With respect to the service pathways, all simulations to date have been based on a 50-percent loss in hydraulic conductivity. However, a geotechnical analysis by John Bosche concludes that a 40-percent loss in conductivity represents the upper limit of the expected loss. That conclusion is consistent with the general results of the infiltrometer test, and it appears to be consistent with an ongoing literature review of vehicle impacts within desert environments. See Response BSE-19 for additional information. See WYA stormwater report Sections 3.5.3.2 and 3.5.3.3 for detailed discuss of impacts due to soil compaction (see Exhibit BSE-3).

Comment 8 [BSE-32]

8) Definition of the Area of the "Service Paths": The calculation of a 10 percent increase in Curve Number in TM4 is based on an assumption that the service paths are 8 feet wide. The Caterpillar 550 Wheel Harvester shown in the Supplemental Project Description appears to have a wheelbase much wider than 8 feet. The wheelbase of this item should be defined, and the service path width adjusted accordingly. Also, the TM4 calculation assumed service paths between every two heliostat rows, while verbal information during the March 25 meeting suggested it will occur on every 4Ih heliostat row. These two observations may cancel each other out, but the actual assumptions should be specified.

Response BSE-32

See Response BSE-19. The curve number modeling now assumes a path width of 10 feet and a compacted depth of 1 foot. An additional modeling assumption is for a path between adjacent

heliostat rows. As described in the project description (Exhibit BSE-19A), during construction, the pylon and wiring installations will involve vehicle travel on each path, and the mirror installation will involve travel on every fourth path. During operation, the mirror washing will involve travel on every fourth path. Construction staff will be trained to follow strict protocols regarding vehicle and foot traffic and the remediation of unintentionally compacted areas. Operational staff will be trained likewise.

Comment 9 [BSE-33]

9) Effect of Long-Term Vegetation Changes on the Roughness Value: The most recent Supplemental Project Description (dated March 25) states that existing vegetation will be used, to the extent possible, to minimize water and wind erosion. The Flo-2D model presented in TM6 does not specifically state what assumptions were used for evaluating the effect of vegetation on roughness, but from the information in the Supplemental Project Description and verbal discussion, BLM infers that the calculations are performed based on an assumption that vegetation remains in place through the lifespan of the project.

BLM has provided verbal comments for some time regarding assumptions of the status of vegetation over the long-term operation of the facility. We have suggested that BrightSource's hydrogeologic and hydraulic calculations should not be based on the current state of vegetation, nor on the expected state of vegetation shortly after construction. Instead, we have stressed that the flow calculations need to be based on the expected worst-case vegetation conditions that will occur during the lifetime of the facility.

What that worst-case condition will be is difficult to define at present. During the March 25 meeting, BrightSource implied that they have implemented field studies to attempt to identify the impact of certain activities on the vegetation - specifically, the cutting of vegetation to create clearance for construction vehicles. BLM agrees that some mechanism of coming to an understanding of the long-term status of the vegetation needs to be identified. However, such a mechanism must consider all potential parameters that may influence vegetation. These may include, but not be limited to:

- Cutting/trimming to create clearance;
- Compaction of soil during construction;
- Shading by heliostats;
- Relocation of precipitation by presence of heliostats;
- Addition of water through heliostat washing;
- Modification of stormwater flow by presence of heliostat supports and maintenance roads;
- Use of dust suppressants; and
- Use of weed management practices.

Given the complexity of these parameters, and the lack of data on similar projects in this environment, BLM understands the difficulty in projecting what the overall effect will be.

However, the current documentation appears to assume that the overall effect will be to maintain current conditions. This does not appear to be a supportable assumption. In general, most of the above factors can be assumed to negatively impact the native vegetation. The result may be replacement of the native vegetation with non-native species that are more adaptable to shade and other stressors, or it may result in denudation of certain areas.

It is recommended that worst-case scenario calculations be performed to determine the impact of large-scale vegetation denudation on stormwater flows, and resulting sedimentation, erosion, and heliostat stability calculations. We understand that BrightSource has implemented field studies on the vegetation impacts. BLM has no information on these studies, so cannot comment on their scope and purpose. If site-specific field studies are eventually approved to obtain data, they must incorporate all potential stress factors, not just cutting and trimming. Also, any vegetation studies must have their methodologies reviewed and approved by BLM prior to being implemented.

Response BSE-33

Floodflows have been simulated both for the most-likely vegetation condition, which will be that most of the native vegetation will survive within the heliostat arrays, and the worst case scenario, which assumes the site is denuded of vegetation. The most-likely vegetative condition assumes vegetation survival following mowing, the effect of altered hydrology, and the effects of shading of rain and sunlight. See Response BSE-31 on the analysis results. See WYA stormwater report Section 3.3.2 for simulation results (see Exhibit BSE-3).

Comment 10 [BSE-34]

10) Precipitation Model: The current calculation is based on a 100-year, 24-hour precipitation model. The San Bernardino County Manual requires the use of a 24-hour model for the runoff calculation, but a multi-day storm for calculations associated with the design of detention basins. Because no detention basins are proposed at this time, no multi-day analysis is required.

However, should detention basins become a component of the design, the multi-day analysis will be required.

Response BSE-34

As detailed in response BSE-1, San Bernardino County has a goal of 100-year return frequency flood protection for all habitable structures and other non-flood proof structures, and requires control to prevent erosion from a 10-year storm. If retention basins are required, the basins will be designed based on a multi-day storm, as applicable. Additionally, proper consideration will also be given to the FEMA methods as the inflow to a basin has a random component due to the uncertain of the channel location.

LIST OF REFERENCED DOCUMENTS

1. *Solar Partners I, II, IV & VIII, LLC. 2009. Drainage Erosion and Sediment Control Plan, Ivanpah Solar Electric Generating System, San Bernardino County, California (07-AFC-5), Attachment DR-140-1B, Preliminary Draft Plan, With Technical Assistance by CH2MHill.*

2. *CH2MHill. May 2009. Ivanpah Solar Electric Generating System, Construction Stormwater Pollution Prevention Plan.*

EXHIBITS FOR SPECIFIC RESPONSES

Exhibit CL-1	BLM, February 2009. Comments/Observations on ISEGS Work Scope for Attachment A – Hydrogeologic Analysis, and Attachment B – Work Scope for Hydraulic Analysis prepared by BLM and received by BSE on February 4, 2009, unknown reference number
Exhibit CL-2	BSE, 2009. Attachment A – Hydrogeologic Analysis
Exhibit CL-3	BSE, 2009. Attachment B – Work Scope for Hydraulic Analysis
Exhibit CL-4	Comments on ISEGS Stormwater – Preliminary Analysis of Infiltration for Selected Land Surface Conditions provided by Mr. Raymond Lee of BLM to Ms. Alicia Torre of BSE on February 20, 2009
Exhibit CL-5	Comments on ISEGS Stormwater Management Approach and Technical Memos provided by Mr. Raymond Lee to Mr. Todd Stewart of BSE on April 8, 2009
Exhibits BSE-2A through 2D	Four source documents
Exhibit BSE-3	West Yost stormwater report
Exhibit BSE-5.	Flo-2D user's manual
Exhibit BSE-12	Preliminary pylon scour analysis
Exhibit BSE-16	West Yost. 2009. Preliminary Analysis of Infiltration for Selected Land Surface Conditions.
Exhibit BSE-19A	Project Description
Exhibit BSE-19B	Schematic traffic map showing the traffic during construction
Exhibit BSE -19C	Review of Geotechnical Data, Off Road Vehicle Wheel Compaction and Permeability
Exhibit BSE-20	Map, particle-size analysis, infiltrometer field data, graphs and photographs
Exhibits BSE-24A and 24B	FEMA guidelines and an adjunct publication

BEFORE THE ENERGY RESOURCES CONSERVATION AND DEVELOPMENT COMMISSION OF THE STATE OF CALIFORNIA
1516 NINTH STREET, SACRAMENTO, CA 95814
1-800-822-6228 – WWW.ENERGY.CA.GOV

APPLICATION FOR CERTIFICATION
FOR THE *IVANPAH SOLAR ELECTRIC GENERATING SYSTEM*

DOCKET NO. 07-AFC-5

PROOF OF SERVICE
(Revised 4/16/09)

APPLICANT

Solar Partners, LLC
John Woolard,
Chief Executive Officer
1999 Harrison Street, Suite #500
Oakland, CA 94612

Steve De Young, Director
Project Manager
Ivanpah SEGS
Environmental, Safety
and Health
1999 Harrison Street, Ste. 2150
Oakland, CA 94612
sdeyoung@brightsourceenergy.com

APPLICANT'S CONSULTANTS

John L. Carrier, J. D.
2485 Natomas Park Dr. #600
Sacramento, CA 95833-2937
jcarrier@ch2m.com

COUNSEL FOR APPLICANT

Jeffery D. Harris
Ellison, Schneider
& Harris L.L.P.
2600 Capitol Avenue, Ste. 400
Sacramento, CA 95816-5905
jdh@eslawfirm.com

INTERESTED AGENCIES

California ISO
e-recipient@caiso.com

Tom Hurshman,
Project Manager
Bureau of Land Management
2465 South Townsend Ave.
Montrose, CO 81401
tom_hurshman@blm.gov

Sterling White, Field Manager
Bureau of Land Management
1303 South Highway 95
Needles, CA 92363
sterling_white@blm.gov

Becky Jones
California Department of
Fish & Game
36431 41st Street East
Palmdale, CA 93552
dfgpalm@adelphia.net

INTERVENORS

California Unions for Reliable
Energy ("CURE")
Tanya A. Gulesserian
Marc D. Joseph
Adams Broadwell Joseph &
Cardozo
601 Gateway Boulevard, Ste 1000
South San Francisco, CA 94080
tgulesserian@adamsbroadwell.com

*Gloria Smith, Joanne Spalding
Sidney Silliman, Sierra Club
85 Second Street, 2nd Fl.
San Francisco, CA 94105
gloria.smith@sierraclub.org
joanne.spalding@sierraclub.org
gssilliman@csupomona.edu
E-mail Preferred

Joshua Basofin, CA Rep.
Defenders of Wildlife
1303 J Street, Ste. 270
Sacramento, CA 95814
jbasofin@defenders.org
E-MAILED PREFERRED

ENERGY COMMISSION

JEFFREY D. BYRON
Commissioner and Presiding
Member
jbyron@energy.state.ca.us

JAMES D. BOYD
Vice Chairman and
Associate Member
jboyd@energy.state.ca.us

Paul Kramer
Hearing Officer
pkramer@energy.state.ca.us

John Kessler
Project Manager
jkessler@energy.state.ca.us

Dick Ratliff
Staff Counsel
dratliff@energy.state.ca.us

Elena Miller
Public Adviser
publicadviser@energy.state.ca.us

I

DECLARATION OF SERVICE

I, Mary Finn, declare that on May 18, 2009, I served and filed copies of the attached Data Response Set 2I dated May 18, 2009. The original document, filed with the Docket Unit, is accompanied by a copy of the most recent Proof of Service list, located on the web page for this project at:
[www.energy.ca.gov/sitingcases/ivanpah]. The document has been sent to both the other parties in this proceeding (as shown on the Proof of Service list) and to the Commission's Docket Unit, in the following manner:

(*Check all that Apply*)

FOR SERVICE TO ALL OTHER PARTIES:

__x__sent electronically to all email addresses on the Proof of Service list;

__x__by personal delivery or by depositing in the United States mail at Sacramento, CA with first-class postage thereon fully prepaid and addressed as provided on the Proof of Service list above to those addresses **NOT** marked "email preferred."

AND

FOR FILING WITH THE ENERGY COMMISSION:

__x____sending an original paper copy and one electronic copy, mailed and emailed respectively, to the address below (***preferred method***);

OR

_____depositing in the mail an original and 12 paper copies, as follows:

CALIFORNIA ENERGY COMMISSION
Attn: Docket No. __07-AFC-5___
1516 Ninth Street, MS-4
Sacramento, CA 95814-5512
docket@energy.state.ca.us

I declare under penalty of perjury that the foregoing is true and correct.

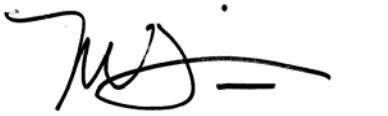

Mary Finn