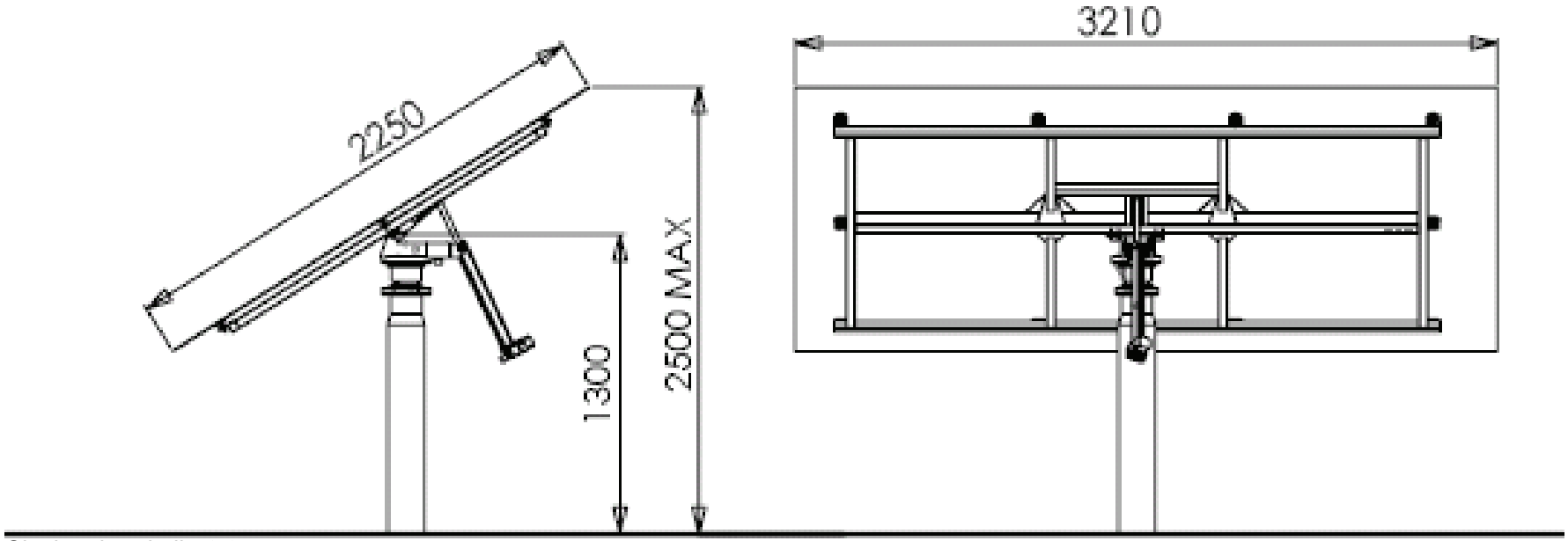

Single-mirror heliostat

Note: Units are in millimeters.

FIGURE DR102-1
CONCEPTUAL HELIOSTAT DRAWING
IVANPAH SOLAR ELECTRIC GENERATING SYSTEM

CH2MHILL

ES062007009SAC Figure_DR102-1.ai 1/11/2008 afint