REVISIONS					
REV	ECO.NO.	DESCRIPTION	BY	DATE	APPROVED
A		FOR IVANPAH SEGS AFC	EDD	09.25.07	GRB
B		FOR IVANPAH AFC DATA REQUESTS	SR	12.28.07	JS

NOTES:
1. MOTOR LOADS SHOWN ARE UNITS OF HORSEPOWER UNLESS OTHERWISE NOTED
2. STATIC LOADS ARE SHOWN IN UNITS OF KW

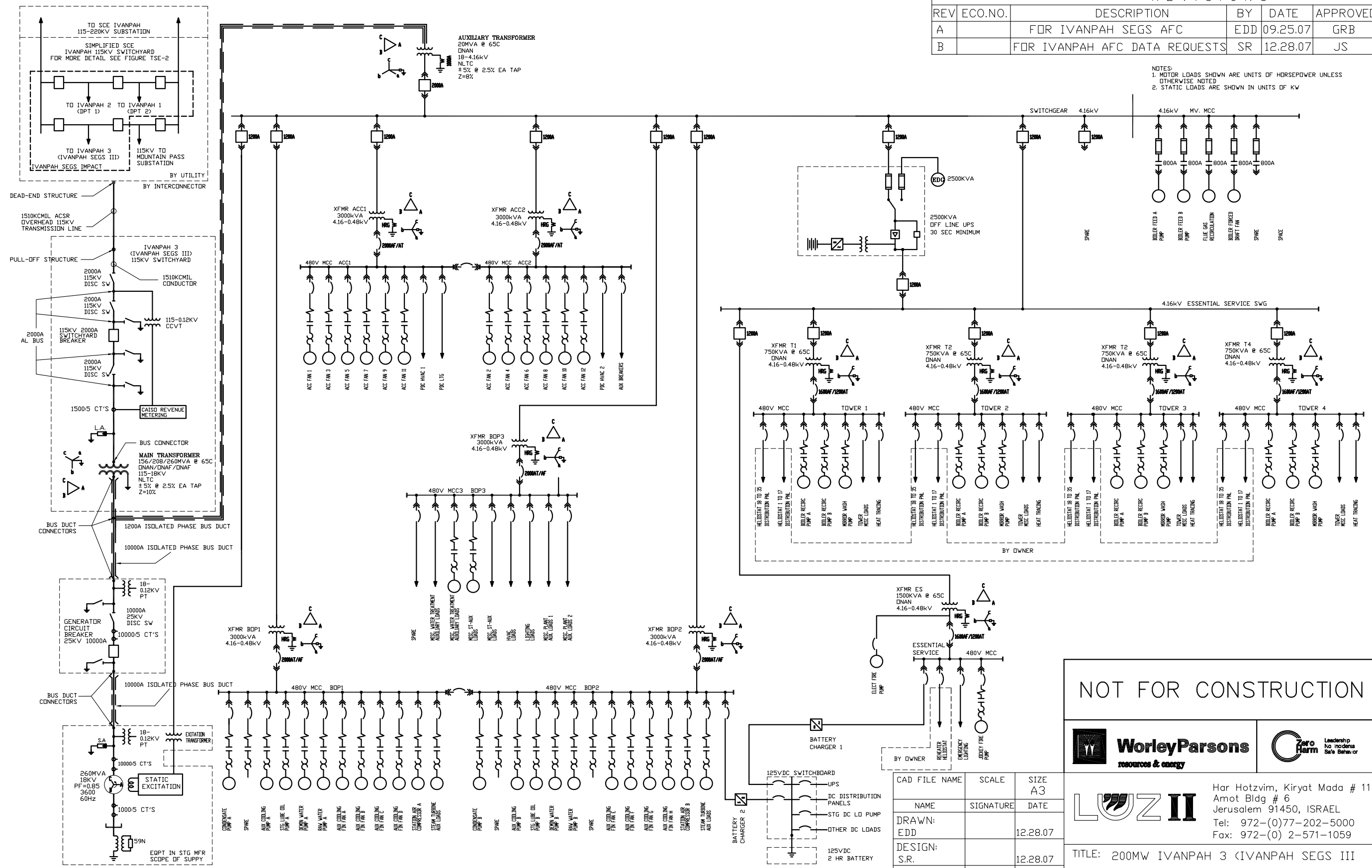

NOT FOR CONSTRUCTION

WorleyParsons resources & energy

Zero Harm — Leadership, No incidents, Safe Behavior

LUZ II
Har Hotzvim, Kiryat Mada # 11,
Amot Bldg # 6
Jerusalem 91450, ISRAEL
Tel: 972-(0)77-202-5000
Fax: 972-(0) 2-571-1059

CAD FILE NAME	SCALE	SIZE A3
NAME	SIGNATURE	DATE
DRAWN: EDD		12.28.07
DESIGN: S.R.		12.28.07
CHECKED: J.S.		01.07.07
APPROVED: G.R.B.		01.07.08

TITLE: 200MW IVANPAH 3 (IVANPAH SEGS III CAISO QUEUE 233)
OVERALL SINGLE LINE DIAGRAM

PROJECT NO.	DOCUMENT NO.	REV
LUZ 01	07-PB-E-D-201	B
	SHEET: 1 of 1	

THIS DOCUMENT IS THE SOLE PROPERTY OF LUZ II Ltd AND CONTAINS INFORMATION PROPRIETARY AND CONFIDENTIAL TO LUZ II Ltd., ANY REPRODUCTION, DISCLOSURE, OR OTHER USE THEREOF IS PROHIBITED, EXCEPT AS OTHERWISE AGREED TO IN WRITING BY LUZ II Ltd.
LUZ II Ltd. RESERVES THE RIGHT TO DEMAND RETURN OF THIS DOCUMENT AT ANY TIME.

FIGURE TSE-1bR