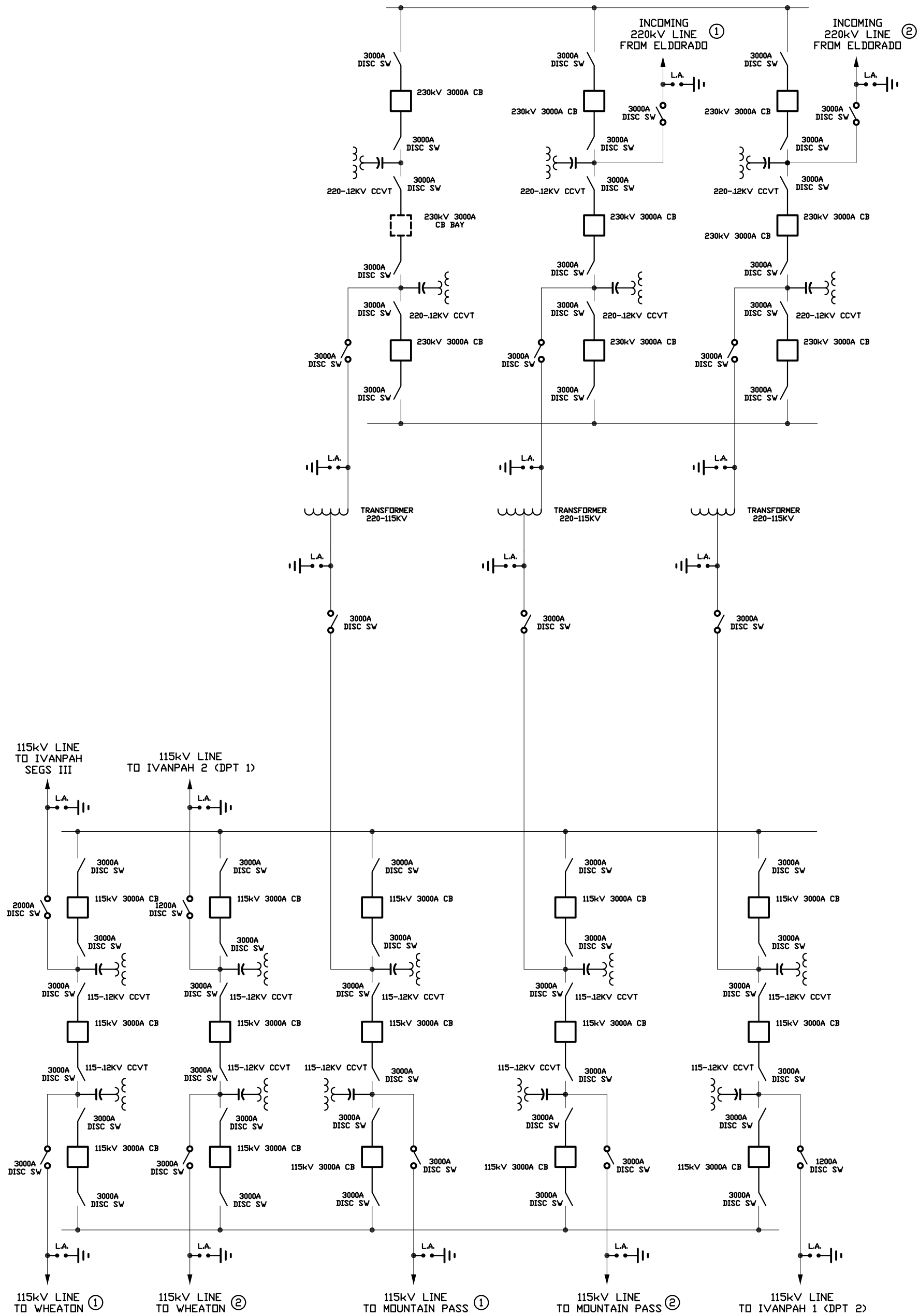

Conceptual One Line of Proposed SCE 220kV/115kV Substation Yard

Figure TSE-2R

Jan. 2, 2008

Ivanpah Solar Electric Generating System

Worley Parsons
resources & energy

Laramore, Douglass and Popham Consulting Engineers