GALATI | BLEK LLP

Plaza Towers
555 Capitol Avenue Suite 600
Sacramento CA 95814
Tel• 916.441.6575
Fax• 916.441.6553

August 9, 2007

DOCKET
01-AFC-6C
DATE AUG 0 9 2007
RECD. AUG 0 9 2007

Christopher Meyer
Ron Yasny
Compliance Project Managers
California Energy Commission
1516 Ninth Street
Sacramento, CA 95814-5512

Subject: **PETITION FOR INSIGNIFICANT PROJECT CHANGE FOR ADDITIONAL SAFETY PLATFORMS AT MAGNOLIA POWER PROJECT (01-AFC-6)**

Dear Mr. Meyer and Mr. Yasney:

Enclosed for filing with the California Energy Commission are one original and 12(Twelve) copies of the **PETITION FOR INSIGNIFICANT PROJECT CHANGE FOR ADDITIONAL SAFETY PLATFORMS AT MAGNOLIA POWER PROJECT.** Specifically, the Petition demonstrates that the requested modifications do not result in new environmental impacts or require any modifications to the existing Conditions of Certification contained in the Final Decision. No additional lighting is proposed as part of this Petition and therefore, no modifications to the approved lighting plan are required.

All proposed additional platforms, stairs, and ladders will be hot-dipped galvanized to match the existing platforms, stairs, and ladders at Magnolia Power Project. The only portions to be painted are the steel members associated with the monorail (item 7) and the support structure for the silencer inspection platform (item 15) both of which will be mounted to the existing painted silencer support structure atop the HRSG. The new steel will be coated to match the existing painted silencer support structure steel.

If you have any questions, please do not hesitate to contact me at (916) 441-6575.

Sincerely,

Scott A. Galati
Counsel to SCPPA

PETITION FOR INSIGNIFICANT PROJECT CHANGE
FOR
ADDITIONAL SAFETY PLATFORMS
AT
MAGNOLIA POWER PROJECT

At Magnolia Power Project several areas have been identified where additional safety platforms are needed to improve operations and maintenance access to the process equipment. The areas are shown on the attached Site Plan (Drawing No. 010-G-002).

It is proposed to fabricate and erect fifteen (15) galvanized steel platforms to fulfill these needs. This petition for an insignificant project change is to allow the platforms to be added. A complete description of the additional platforms is contained in the drawings attached hereto as "Appendix A," and a discussion of the necessity for the addition of the safety platforms follows:

(A) Description of the proposed modifications:

- Items 1 thru 5: There are five (5) platforms proposed to allow access to doors in the CT Generator Compartment, CT Load Compartment, and CT Terminal Enclosure – these are platforms to access the west end of the Generator Collector Compartment, the doors on both the north and south sides of the Load Compartment between the Generator and the Turbine Compartments, and the doors on the east end of the terminal enclosure compartment. These platforms will include stairways, ladders, and catwalks as needed to facilitate access. (Historically, GE provide these platforms with their Combustion Turbine-Generator equipment, however, GE recently discontinued the practice of supplying platforms with their equipment.)

- Item 6. A stairway is proposed to replace an existing ladder on the northeast end of the platform accessing the forced circulation heat exchanger and belt press in the ZLD Area. Operators tend to this equipment multiple times per shift, so a stairway is appropriate

- Items 7 & 8. There are four vessels in the ZLD area (two Multi-Media Filters and two Weak Acid Cation Units) that require working platforms atop the vessels to change-out the media or resins inside the vessel beds. Although clips are provided for the attachment of ladders and platforms on these vessels, none were provided by the original equipment manufacturer. The frequency of changing the resins and media in these vessels necessitates addition of the working platforms.

- Item 9. A short monorail with a two-wheel trolley is needed – atop the HRSG - above the HR Outlet Safety Valve (1HR-PSV213 aka 120PV002A) to allow the mechanics to remove this safety valve periodically for maintenance.

- Item 10. A ladder is needed to access the top of the Turbine Compartment for maintenance of the fan modules up there.

- Item 11. Ladders and platforms are needed for access to three bypass valves located in the piping between the HRSG pipe rack and the STG Building. It is necessary for mechanics and instrumentation technicians to perform maintenance on these routinely.

- Item 12. Platforms with ladders are needed to access manways on the south side of the Condenser. This multilevel platform is needed to facilitate inspection, brushing, and air lancing of the condenser tubes, as needed to maintain cleanliness on the circulating water side of the tubing inside the Condenser. This platform will be erected inside of the STG Building.

- Item 13. A small platform with a ladder is needed to access the blower motor control boxes above the Gland Steam Condenser. The control panel needs to be routinely accessed by operations personnel. This platform will be erected inside of the STG Building.

- Item 14. A ramp is needed for access to the bridge crane platform inside the STG Building for necessary inspections and maintenance of the crane rigging. This platform will be erected inside of the STG Building.

- Item 15. A platform with ladder is needed for access to inspect the silencers atop the HRSG. This platform will be installed above the silencer support structure, and will be equipped with a ladder lock to prevent uncontrolled access. This one is the only proposed platform to be installed where it could be visible from outside the plant area. To mitigate visual impact this platform will be galvanized like the silencers, with supporting members painted the same color as the existing silencer support structure.

(B) A discussion of the necessity for the proposed modifications

The proposed additional platforms are to ensure safe access to the power plant process equipment. In the original design guidelines for the Magnolia Power Plant, platforms were to be provided wherever operations or maintenance access would be anticipated more frequently than once per year. Although many platforms were included originally, there are these fifteen areas where operations and maintenance personnel have found additional platforms are necessary. Without the adding the proposed platforms, there is higher risk of a personnel injury or loss of equipment operational reliability.

(C) If the modification is based on information that was known by the petitioner during the certification proceeding, an explanation why the issue was not raised at that time

It wasn't realized at the time of the original certification proceeding, that these additional platforms would be needed to safely maintain the power plant process equipment.

(D) If the modification is based on new information that changes or undermines the assumptions, rationale, findings, or other bases of the final decision, an explanation of why the change should be permitted

The proposed modification - fabrication and erection of additional platforms - does not change or undermine in any way the assumptions, rationale, findings, or other basis of the CEC Final Decision (01-AFC-6).

(E) An analysis of the impacts the modification may have on the environment and proposed measures to mitigate any significant adverse impacts.

The additional platforms proposed will have no significant adverse impacts on the environment. The only possible impact identified is the potential visual impact of the proposed Silencer Inspection Platform atop the HRSG (Item 15 above). To mitigate any significant adverse visual impact, the platform is set-back from the periphery of the structure and is located mostly behind the existing silencers. To blend-in, the platform will be galvanized (like the silencers), and the supporting structure will be painted the same color as the existing silencer supporting structure. In Appendix A four perspective views are modeled to illustrate the appearance of the top of the HRSG (before and after the silencer inspection platform is added).

(F) A discussion of the impact of the modification on the facility's ability to comply with applicable laws, ordinances, regulations, and standards

The proposed modification does not impact the facilities ability to comply with all applicable laws, ordinances, regulations, and standards.

(G) A discussion of how the modification affects the public

The public will be able to see the silencer inspection platform if they look closely from adjacent to the plant site. However, due to the insignificance of the visual impact, the modification would most likely not be noticed by the public.

(H) A list of property owners potentially affected by the modification

It is anticipated that no property owners will be affected by the proposed modifications.

(I) A discussion of the potential effect on nearby property owners, the public and the parties in the application proceedings.

It is anticipated that no property owners will be affected by the additional platforms, and the public will most likely not notice the modification.

APPENDIX A

DRAWING & DOCUMENT LIST

Drawing/Doc No.	Drawing or Document Title
- - -010-G-002	MPP Site Plan [Annotated to Show Itemized Areas for Additional Platforms]
145348-S1000	Maintenance Access Platforms Erection Notes & Legend
145348-S1001	CT Generator Access Platforms Plans & Sections
145348-S1002	CT Generator Access Platforms Plans & Sections
145348-S1003	Steam Condenser Access Platforms Plans & Sections
145348-S1004	ZLD & Multi Media Filter Tank Access Platforms Plans & Sections
145348-S1005	C.T. Enclosure and PSV Maintenance Platforms Plans & Sections
145348-S1006	Weak Acid Cation Tank Access Platform Plans & Sections
145348-S1007	Bypass Valves Maintenance Access Platforms Plans & Sections
145348-S1011	Maintenance Access Platforms Typical Sections and Details
145348-S1012	Stairs & Landings Typical Details
145348-S1013	Maintenance Access Platforms Typical Sections & Details
145348-S1015	Turbine Room Crane Access Platform Steel Handrail & Plate Plans & Details
145348-S2000	Access Platforms – Grating and Handrail Plans & Sections
145348-S2001	Access Platforms – Grating & Handrail Plans & Sections
145348-S2002	Access Platforms – Grating & Handrail Plans & Sections
- - - - - - - - - -	Perspective Views [Showing Views Before & After Addition of Silencer Inspection Platform]

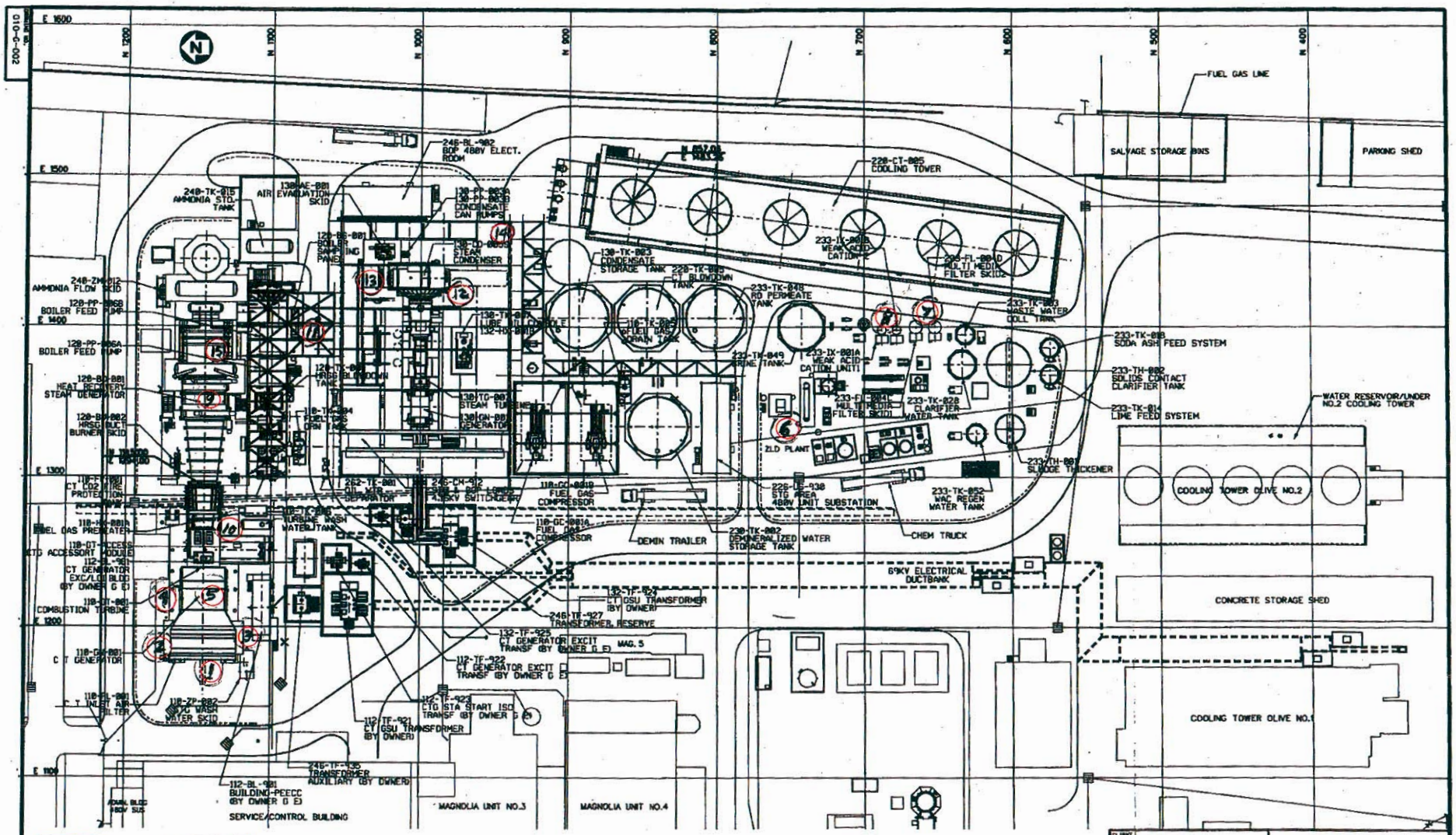

THIS DRAWING IS NOT VALID UNLESS THE LATEST REVISION INITIALS ARE HANDWRITTEN

ISSUED FOR CONSTRUCTION

MAGNOLIA POWER PROJECT

AKER KVÆRNER™ E&C Division San Francisco, California

MPP SITE PLAN

010-G-002

...\Plot Plan\010g002_ASBLT.dgn 4/3/2006 11:36:32 AM

GENERAL NOTES APPLICABLE TO ALL S1000 SERIES DRAWINGS

1. ALL DIMENSIONS ARE UNITED STATES SYSTEM UNLESS NOTED OTHERWISE
2. ALL STRUCTURAL STEEL SHAPES SHALL BE ASTM A36.
3. ALL COLUMN BASEPLATES, SHEAR KEYS AND UPLIFT CHAIRS SHALL BE A36 UNLESS NOTED OTHERWISE
4. ALL BEAM CONNECTIONS SHALL HAVE CONNECTION ANGLES SHOP WELDED TO THE BEAM WEB AND FIELD BOLTED WITH A 5 1/2" GAGE TO THE SUPPORTING MEMBER, UNLESS OTHERWISE NOTED. BOLTS SHALL BE ASTM A325 UNLESS OTHERWISE NOTED.
5. ALL FIELD CONNECTIONS TO EXISTING STRUCTURES SHALL BE BY BOLTING UNLESS OTHERWISE NOTED ON DRAWINGS.
6. ERECTING CONTRACTOR SHALL FIELD DRILL ALL EXISTING STEEL MEMBERS FOR FIELD BOLTED CONNECTIONS
7. KICKPLATE SHALL BE STRAIGHT AND TRUE AT TIME OF WELDING TO GUARDRAIL POST
8. SEE SPECIFICATION 61 4001 FOR GUARDRAIL, HANDRAIL, AND BAR GRATING TYPE AND SIZE.
9. PLATFORM FRAMING SHALL BE SHOP ASSEMBLED TO THE MAXIMUM EXTENT ALLOWABLE. CONTRACTOR SHALL BE RESPONSIBLE FOR DETERMINING AMOUNT OF FIELD ASSEMBLY
10. FIELD WELDING OF STRUCTURAL ATTACHMENTS TO BEAMS OR OTHER MEMBERS SHALL BE PERFORMED WITH THE MEMBER POSITIONED TO ELIMINATE BENDING STRESSES IN THE AREA BEING WELDED. FIELD ATTACHMENTS OF HANGER LUGS SHALL BE MADE WITH WELDS PLACED PARALLEL TO AND CENTERED UNDER BEAM WEBS.
11. WELDS SHALL BE WITH AWS E70 ELECTRODES. ALL FIELD AND SHOP WELDING PROCEDURES SHALL BE IN ACCORDANCE WITH AWS CODES. ATTENTION SHALL BE GIVEN TO PROPER HEAT TREATMENT.
12. DEVIATIONS SHALL BE SUBJECT TO ACCEPTANCE BY THE ENGINEER.
13. DIMENSIONS SHOWN ON PLAN AND SLOPING FRAMING ARE PLAN DIMENSIONS.
14. BOLT HOLES SHALL BE 1/16" LARGER THAN THE NOMINAL BOLT DIAMETER, UNLESS OTHERWISE NOTED.
15. EXPANSION ANCHORS SHALL BE INSTALLED ACCORDING TO MANUFACTURER'S INSTRUCTIONS USING STANDARD EMBEDMENT DEPTHS, UNLESS OTHERWISE NOTED.
16. WHEN FILLET WELD SIZE IS NOT INDICATED ON THE DETAIL DRAWINGS, WELD SIZE SHALL BE ACCORDING TO TABLE J2.4 "AISC MANUAL OF STEEL TABLE CONSTRUCTION–ALLOWABLE STRESS DESIGN", 9TH EDITION
17. STANDARD ANGLE GAGE SHALL BE THE "USUAL GAGES FOR ANGLES" SHOWN ON PAGE 1-52 "AISC MANUAL OF STEEL CONSTRUCTION–ALLOWABLE STRESS DESIGN", 9TH EDITION.

ABBREVIATIONS

AB	ANCHOR BOLT	LG	LENGTH
ASSY	ASSEMBLY	LLO	LONG LEG OUTSTANDING
BOT	BOTTOM	LSH	LONG–SLOTTED HOLE
BM	BEAM	MIN	MINIMUM
BOPL	BOTTOM OF BASEPLATE ELEVATION	NOM	NOMINAL
BOS EL	BOTTOM OF STEEL ELEVATION	PL	PLATE
CL	CENTER LINE	REF	REFERENCE
CTR	CENTER	REINF	REINFORCEMENT
COL	COLUMN	REQD	REQUIRED
CONC	CONCRETE	REM	REMOVABLE STEEL
CONN	CONNECTION	SECT	SECTION
CONT	CONTINUOUS	SLO	SHORT LEG OUTSTANDING
CONTR	CONTRACTOR	SSH	SHORT–SLOTTED HOLE
DIA	DIAMETER	STD	STANDARD
DIM	DIMENSION	THK	THICKNESS
DET	DETAIL	T&B	TOP & BOTTOM
DWG	DRAWING	TOC EL	TOP OF CONCRETE ELEVATION
EB	ERECTION BRACE	TOG EL	TOP OF GRATING ELEVATION
EL	ELEVATION	TOS EL	TOP OF STEEL ELEVATION
EXP	EXPANSION	TOPL	TOP OF PLATE ELEVATION
FLG	FLANGE	TYP	TYPICAL
FDN	FOUNDATION	UON	UNLESS OTHERWISE NOTED
GA	GAGE	VERT	VERTICAL
HORIZ	HORIZONTAL	WD	WIDTH
JNT	JOINT	WP	WORK POINT

LEGEND

1 / S9950 — SECTION OR DETAIL NUMBER / DRAWING NUMBER ON WHICH SECTION OR DETAIL APPEARS

W12X40 — MEMBER SHAPE
(±1'-0") — TOP OF STEEL IF DIFFERENT FROM REFERENCE ELEVATION, (+) SIGN INDICATES DISTANCE ABOVE; (–) SIGN INDICATES DISTANCE BELOW REFERENCE ELEVATION

W10x33 POST (OR HANGER)
FROM (REF LEVEL)
TO (REF LEVEL) — POST OR HANGER DESIGNATION

VERTICAL BRACE UP FROM INDICATED LOCATION

VERTICAL BRACE DOWN FROM INDICATED LOCATION

VERTICAL BRACE UP AND DOWN FROM INDICATED LOCATION

SLEEVE OR OPENING IN CONCRETE OR GRATING

MATERIAL LEGEND

CONCRETE

GRATING

CHECKERED PLATE OR FLOOR COMPOSITE

EXISTING CONCRETE OR PRECAST

APPROVED FOR CONSTRUCTION

NO	DATE	REVISIONS AND RECORD OF ISSUE	DRN	DES	CHK	PDE	APP
0	02/09/2007	ISSUE FOR CONSTRUCTION	MAN	LEK		FAW	

I HEREBY CERTIFY THAT THIS DOCUMENT WAS PREPARED BY ME OR UNDER MY DIRECT SUPERVISION AND THAT I AM A DULY REGISTERED PROFESSIONAL ENGINEER UNDER THE LAWS OF THE STATE OF CALIFORNIA
SIGNED GRAYLYN L. GARR
DATE 02/09/2007 REG NO. 34936

BLACK & VEATCH CORPORATION
ENGINEER L. KASHKA DRAWN M. MUTI
CHECKED A. WILEY DATE 09/27/06

BURBANK POWER & WATER
MAGNOLIA POWER PLANT

MAINTENANCE ACCESS PLATFORMS
ERECTION NOTES AND LEGEND

PROJECT / DRAWING NUMBER: 145348–S1000
REV: 0
CODE
AREA

ACAD 15.05
01_1
12/08/06 1:22:01
MUT45453
A1-S2-S3

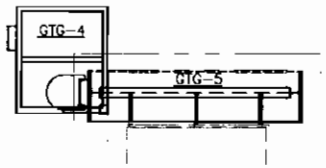

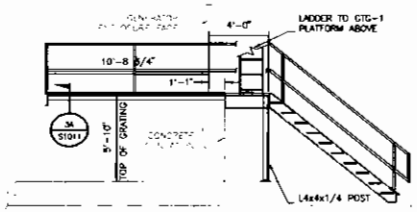

GTG-2: SECTION A-A

SCALE: 1/4"=1'-0"

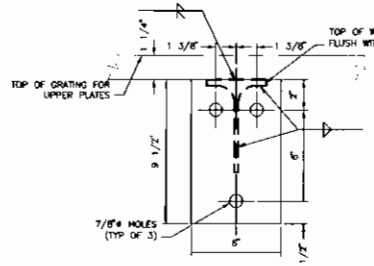

GTG-1: SECTION VIEW E (TYP OF 6)

SCALE: 3"=1'-0"
9 1/2"x6"x1" PLATE (EXIST)
9 1/2"x6"x3/4" PLATE (NEW)
NOTE: EXISTING 1" PLATES ARE TAPPED FOR RECEIVING 0.75-10 UNC-2B

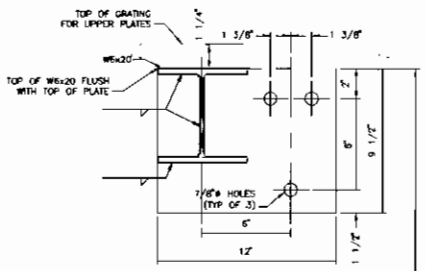

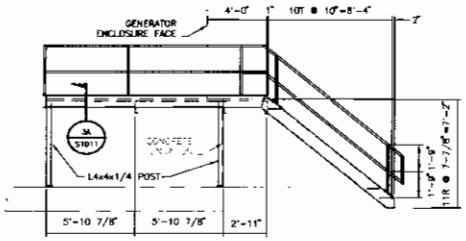

GTG-2: ELEVATION VIEW LOOKING SOUTH

SCALE: 1/4"=1'-0"

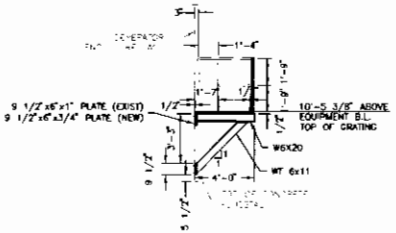

GTG-1: SECTION C-C (TYP 3 PLACES)

SCALE: 1/4"=1'-0"

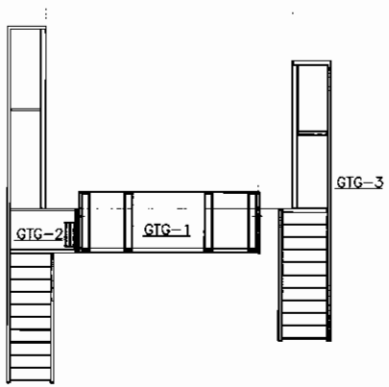

C.T. GENERATOR ACCESS PLATFORMS

SCALE: 1/4"=1'-0"

NOTE: PLAN PROVIDED TO SHOW RELATIONSHIP OF 5 GTG PLATFORMS ONLY. SEE INDIVIDUAL PLANS FOR DETAILS

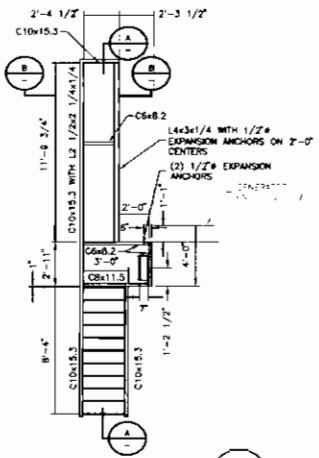

GTG-2: 1A-PLAN VIEW

SCALE: 1/4"=1'-0"

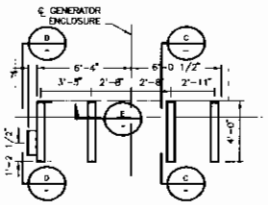

GTG-1: PLAN VIEW

SCALE: 1/4"=1'-0"

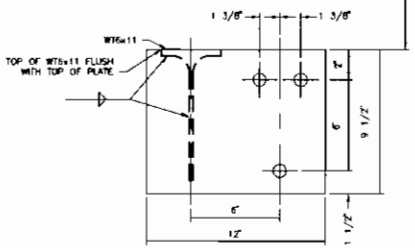

GTG-1: SECTION VIEW F-F (TYP OF 1)

SCALE: 3"=1'-0"
9 1/2"x6"x1" PLATE (EXIST)
9 1/2"x12"x3/4" PLATE (NEW)
NOTE: EXISTING 1" PLATES ARE TAPPED FOR RECEIVING 0.75-10 UNC-2B

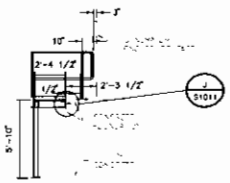

GTG-2: SECTION VIEW B-B

SCALE: 1/4"=1'-0"

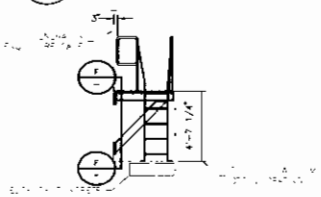

GTG-1: SECTION D-D

SCALE: 1/4"=1'-0"

APPROVED FOR CONSTRUCTION

NO	DATE	REVISIONS AND RECORD OF ISSUE	DRN	DES	CHK	PDE	APP
0	02/09/2007	ISSUE FOR CONSTRUCTION	MAA	LEK		FAW	

I HEREBY CERTIFY THAT THIS DOCUMENT WAS PREPARED BY ME OR UNDER MY DIRECT SUPERVISION AND THAT I AM A DULY REGISTERED PROFESSIONAL ENGINEER UNDER THE LAWS OF THE STATE OF CALIFORNIA.
SIGNED GRAYLYN L. GARR
DATE 02/09/2007 REG NO. 34296

BLACK & VEATCH CORPORATION
ENGINEER L. KASHKA DRAWN M. MUTT
CHECKED A. WILEY DATE 09/27/06

BURBANK POWER & WATER
MAGNOLIA POWER PLANT

CT GENERATOR ACCESS PLATFORMS
PLANS AND SECTIONS

PROJECT 145348 DRAWING NUMBER S1001 REV 0
CODE
AREA

NUTAG=53 D1 AC40 15.05
A1/ASLD/13 1=40
12/08/06 13:42:06

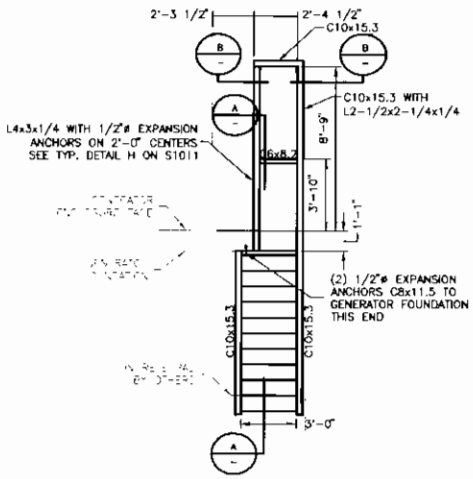

GTG-3: PLAN VIEW
SCALE: 1/4"=1'-0"

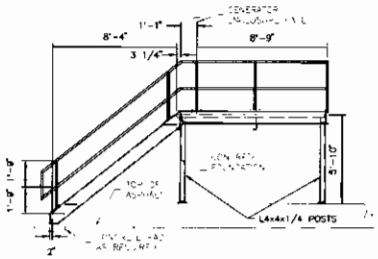

GTG-3: ELEVATION VIEW LOOKING NORTH
SCALE: 1/4"=1'-0"

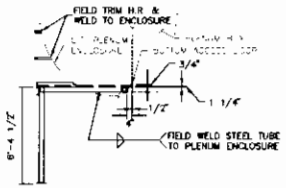

GTG-4: SECTION F-F
SCALE: 3/4"=1'-0"

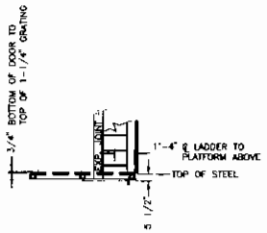

GTG-4: SECTION VIEW G-G
SCALE: 3/4"=1'-0"

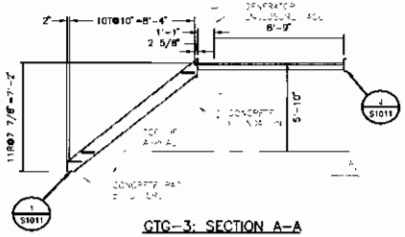

GTG-3: SECTION A-A
SCALE: 1/4"=1'-0"

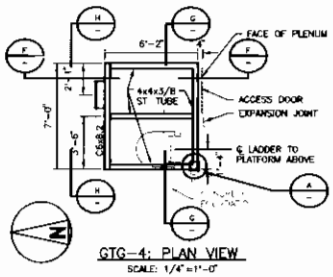

GTG-4: PLAN VIEW
SCALE: 1/4"=1'-0"

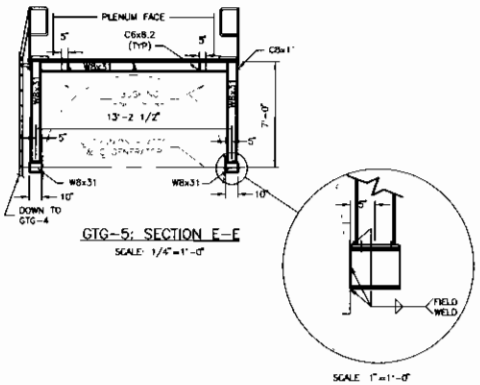

GTG-5: SECTION E-E
SCALE: 1/4"=1'-0"

SCALE 1"=1'-0"

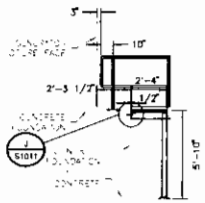

GTG-3: SECTION VIEW B-B
SCALE: 1/4"=1'-0"

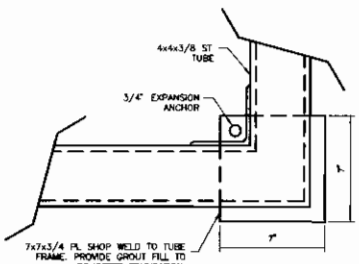

DETAIL A
SCALE: 3"=1'-0"

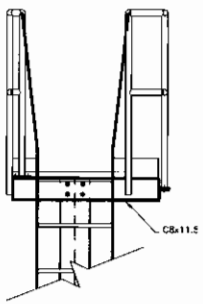

GTG-5: SECTION C-C
SCALE: 3/4"=1'-0"

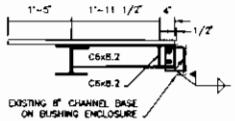

GTG-5: SECTION VIEW D-D
SCALE 3/4"=1'-0"
TYP 3 PLACES

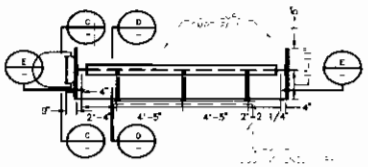

GTG-5: PLAN VIEW
SCALE: 1/4"=1'-0"

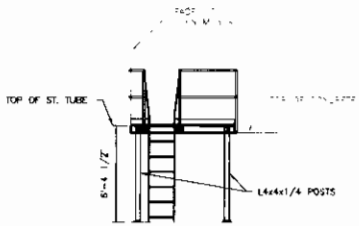

GTG-4: SECTION H-H
SCALE: 1/4"=1'-0"

APPROVED FOR CONSTRUCTION

NO	DATE	REVISIONS AND RECORD OF ISSUE	DRN	DES	CHK	PDE	APP
0	02/09/2007	ISSUE FOR CONSTRUCTION	MAN	LEK			FAW

I HEREBY CERTIFY THAT THIS DOCUMENT WAS PREPARED BY ME OR UNDER MY DIRECT SUPERVISION AND THAT I AM A DULY REGISTERED PROFESSIONAL ENGINEER UNDER THE LAWS OF THE STATE OF CALIFORNIA.
SIGNED: GARYLYN L. GARR
DATE: 02/09/2007 REG NO: 54956

BLACK & VEATCH CORPORATION
ENGINEER: L. KASHKA | DRAWN: M. MUTT
CHECKED: A. WILLY | DATE: 10/09/06

BURBANK POWER & WATER
MAGNOLIA POWER PLANT
CT GENERATOR ACCESS PLATFORMS PLANS AND SECTIONS

PROJECT / DRAWING NUMBER: 145348-S1002 | REV: 0
CODE:
AREA:

ACAD 15.05
01 1=1
12/12/06 10:23:23

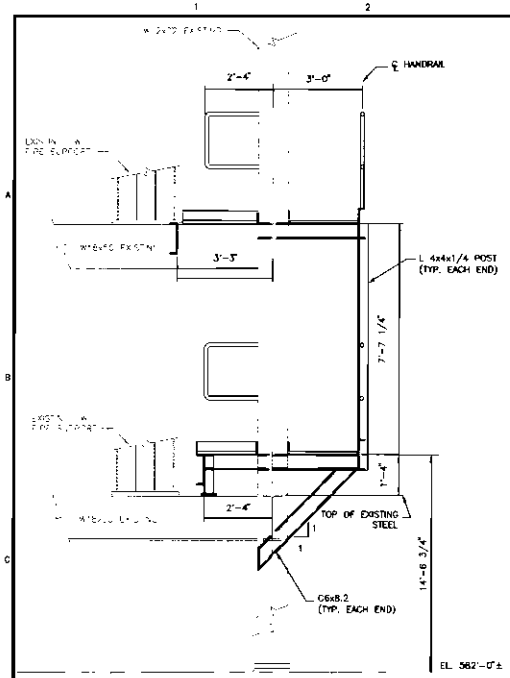

CONDENSER WATERBOX MANHOLE ACCESS-ELEVATION

SCALE: 1/2"=1'-0"

NOTE: ALL CONNECTIOS SHALL BE BOLTED

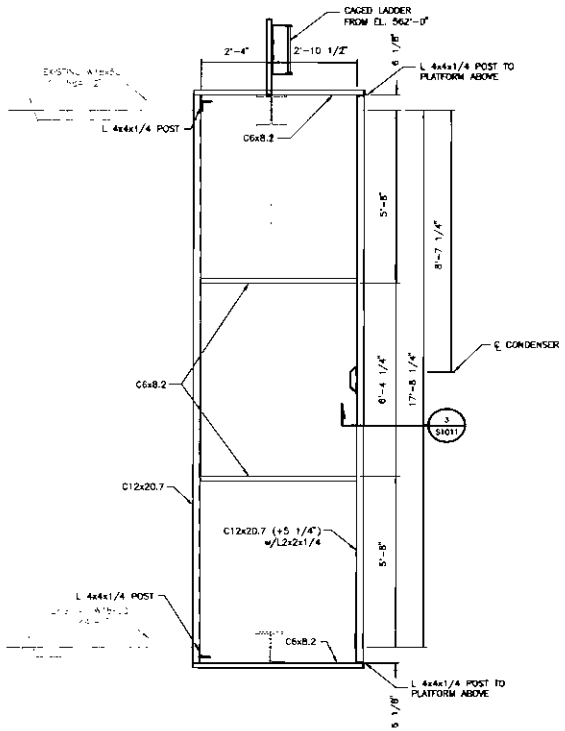

CONDENSER WATERBOX MANHOLE ACCESS PLAN @ 576'-6 3/4" T.O.S.

SCALE: 1/2"=1'-0"

NOTE: ALL CONNECTIOS SHALL BE BOLTED

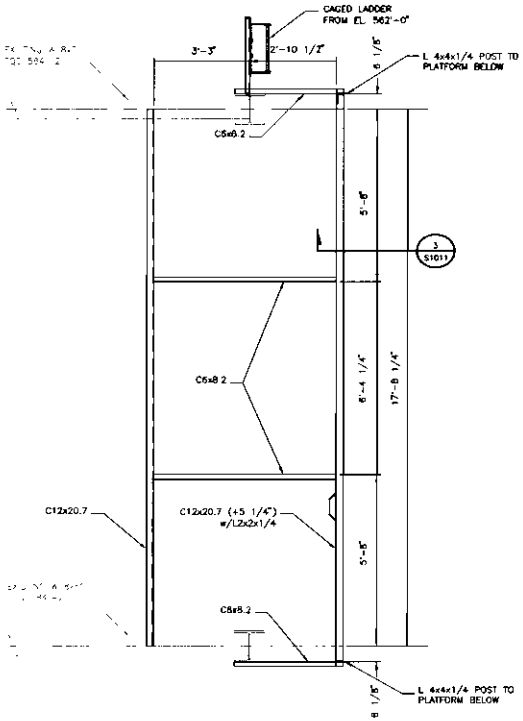

CONDENSER WATERBOX MANHOLE ACCESS PLAN @ 584'-2" T.O.S.

SCALE: 1/2"=1'-0"

NOTE: ALL CONNECTIOS SHALL BE BOLTED

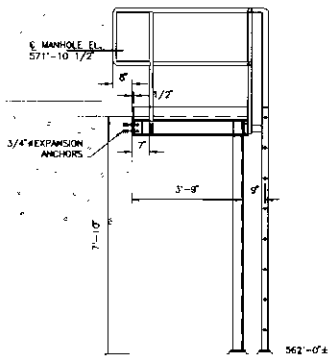

CONDENSER ACCESS PLATFORM ELEVATION LOOKING EAST

SCALE: 1/2"=1'-0"

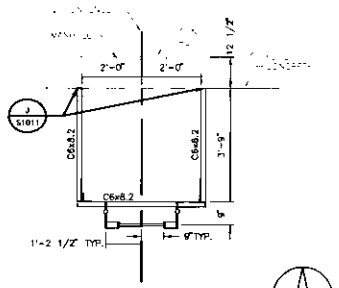

CONDENSER ACCESS PLATFORM FRAMING PLAN @ 568'-6 1/4"

SCALE: 1/2"=1'-0"

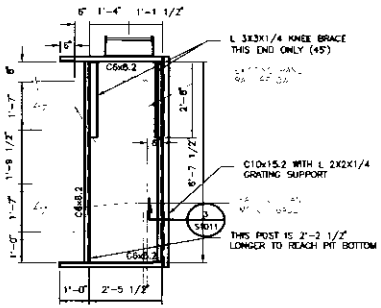

GLAND STEAM COND. VALVE ACCESS PLATFORM (GSC-1) PLAN

SCALE 1/2"=1'-0"

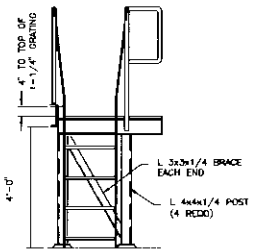

GSC-1: NORTH ELEVATION VIEW

SCALE 1/2"=1'-0"

APPROVED FOR CONSTRUCTION

NO.	DATE	REVISIONS AND RECORD OF ISSUE	DR	DES	CH	OP	DE	APP
0	02/09/2007	ISSUE FOR CONSTRUCTION	MANLEK				FAW	

I HEREBY CERTIFY THAT THIS DOCUMENT WAS PREPARED BY ME OR UNDER MY DIRECT SUPERVISION AND THAT I AM A DULY REGISTERED PROFESSIONAL ENGINEER UNDER THE LAWS OF THE STATE OF CALIFORNIA.

SIGNED GRAYLYN L. GARR

DATE 02/09/2007 REG. NO. 34258

BLACK & VEATCH CORPORATION

ENGINEER L. KASHKA DRAWN M. MURT

CHECKED A. WILEY DATE 10/16/06

BURBANK POWER & WATER
MAGNOLIA POWER PLANT

STEAM CONDENSER ACCESS PLATFORMS PLANS AND SECTIONS

PROJECT DRAWING NUMBER 145348-S1003

REV 0

CODE

AREA

N:\145453 D1 ACAD 16.1s (LMS Tech)
A-1=1
02/07/07 09:10:03

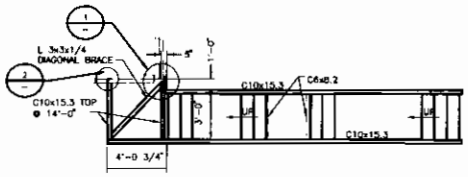

ZLD PLATFORM ACCESS PLAN

SCALE: 1/4"=1'-0"

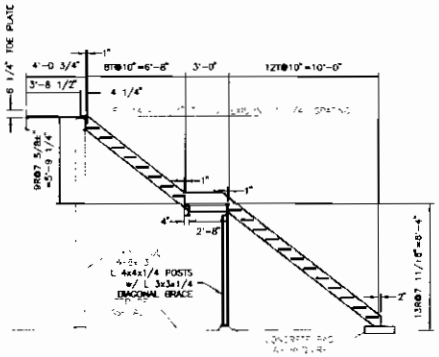

ZLD PLATFORM ACCESS
SECTION LOOKING SOUTH

SCALE: 1/4"=1'-0"

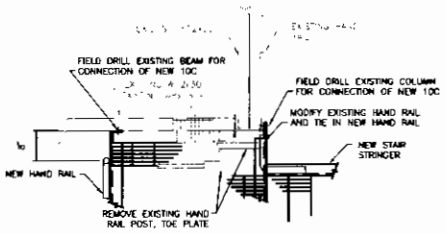

ZLD PLATFORM ACCESS
DETAIL 1

SCALE: 3/4"=1'-0"

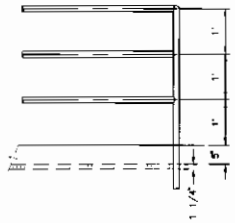

TYPICAL HANDRAIL @ ZLD AREA

SCALE: 3/4"=1'-0"

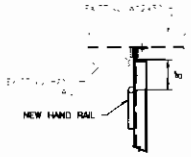

ZLD PLATFORM ACCESS
DETAIL 2

SCALE: 3/4"=1'-0"

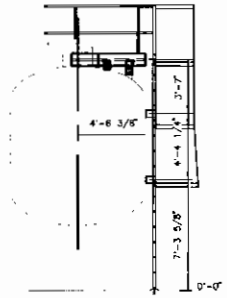

MULTI MEDIA FILTER TANK ELEVATION

SCALE: 1/4"=1'-0"

NOTE:
(1) 2 ASSEMBLIES REQUIRED

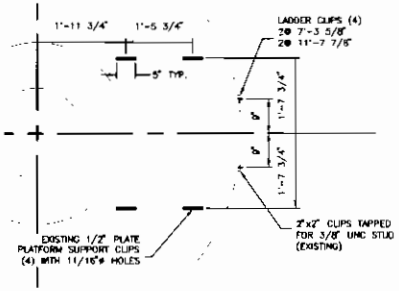

MULTI MEDIA FILTER TANK ACCESS
LADDER AND PLATFORM MOUNTING CLIP PLAN

SCALE: 3/4"=1'-0"

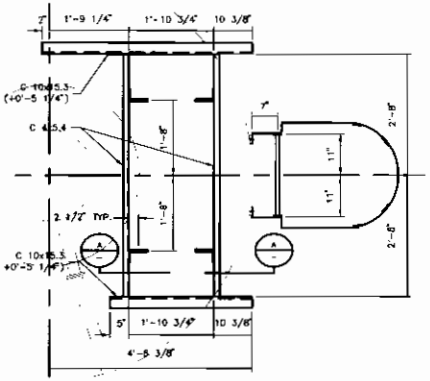

MULTI MEDIA FILTER TANK STEEL FRAMING PLAN

SCALE: 3/4"=1'-0"

NOTE:
(1) 2 ASSEMBLIES REQUIRED

(2) STEEL FRAME, INCLUDING
HANDRAIL, TO BE SHOP ASSEMBLED

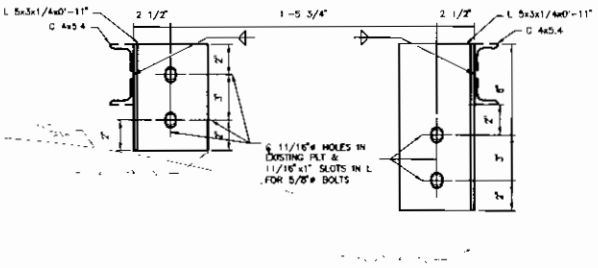

MULTI MEDIA FILTER TANK
SECTION A-A

SCALE: 3/4"=1'-0"

APPROVED FOR
CONSTRUCTION

NO	DATE	REVISIONS AND RECORD OF ISSUE	DRN	DES	CHK	PDE	APR
0	02/09/2007	ISSUE FOR CONSTRUCTION	MANLEX			FAW	

I HEREBY CERTIFY THAT THIS DOCUMENT WAS PREPARED BY ME OR UNDER MY DIRECT SUPERVISION AND THAT I AM A DULY REGISTERED PROFESSIONAL ENGINEER UNDER THE LAWS OF THE STATE OF CALIFORNIA.
SIGNED GRAYLYN L. GARR
DATE 02/09/2007 REG NO 54956

BLACK & VEATCH CORPORATION
ENGINEER L. KASHKA DRAWN M. NUTT
CHECKED A. WILEY DATE 10/19/06

BURBANK POWER & WATER
MAGNOLIA POWER PLANT

ZLD & MULTI MEDIA FILTER TANK ACCESS PLATFORMS
PLANS AND SECTIONS

PROJECT / DRAWING NUMBER: 145348-S1004
REV: 0
CODE
AREA

ACAD 15.05
D1 1=1"
12/08/06 11:28:22

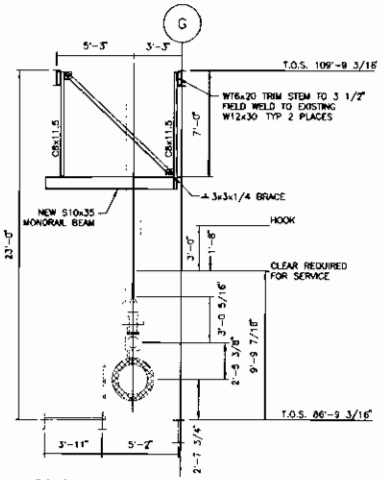

PSV213 MAINTENANCE PLATFORM ACCESS
SECTION LOOKING SOUTH
SCALE: 1/4"=1'-0"

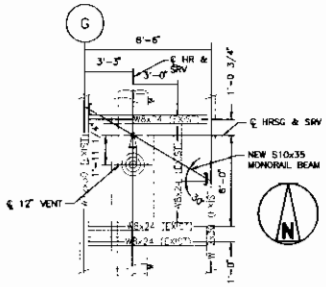

PSV213 MAINTENANCE PLATFORM ACCESS
PLAN @ EL. 109'-9 3/16" T.O.S.
SCALE: 1/4"=1'-0"

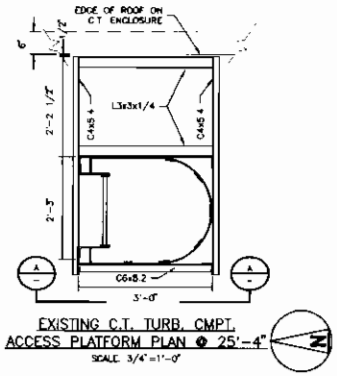

EXISTING C.T. TURB. CMPT.
ACCESS PLATFORM PLAN @ 25'-4"
SCALE: 3/4"=1'-0"

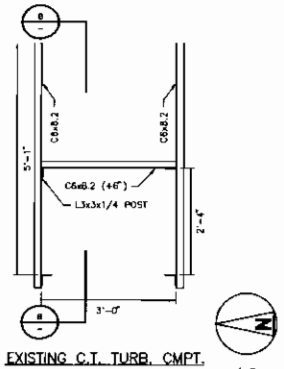

EXISTING C.T. TURB. CMPT.
ACCESS PLATFORM PLAN @ 24'-4 3/4"
SCALE: 3/4"=1'-0"

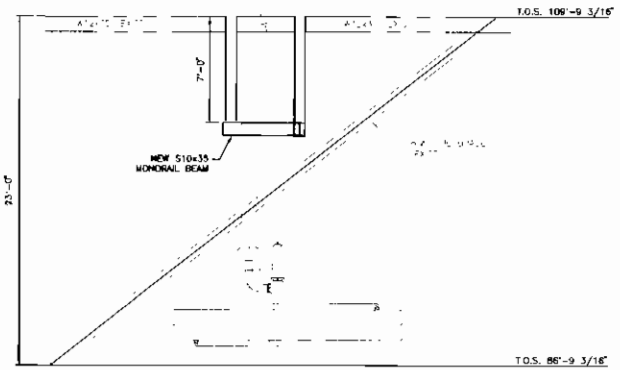

PSV213 MAINTENANCE PLATFORM ACCESS
SECTION LOOKING WEST
SCALE: 1/4"=1'-0"

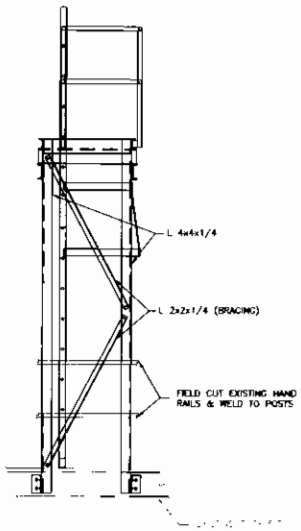

ACCESS TO EXISTING TOP C.T.
CMPT. SECTION A-A
SCALE: 1/2"=1'-0"

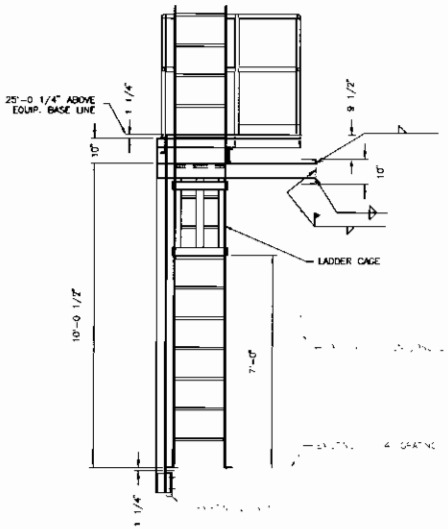

ACCESS TO EXISTING TOP C.T.
CMPT. SECTION B-B
SCALE: 1/2"=1'-0"

APPROVED FOR CONSTRUCTION

NO	DATE	REVISIONS AND RECORD OF ISSUE	DRN	DES	CHK	PDE	APP
0	02/09/2007	ISSUE FOR CONSTRUCTION	MANLEK			FAW	

I HEREBY CERTIFY THAT THIS DOCUMENT WAS PREPARED BY ME OR UNDER MY DIRECT SUPERVISION AND THAT I AM A DULY REGISTERED PROFESSIONAL ENGINEER UNDER THE LAWS OF THE STATE OF CALIFORNIA
SIGNED GRAYLYN L. GARR
DATE 02/09/2007 REG NO 54954

BLACK & VEATCH CORPORATION
ENGINEER L. KASHKA DRAWN M. NUTT
CHECKED A. BILEY DATE 10/24/06

BURBANK POWER & WATER
MAGNOLIA POWER PLANT

C.T. ENCLOSURE & PSV MAINTENANCE PLATFORMS PLANS AND SECTIONS

PROJECT 145348-S1005 DRAWING NUMBER REV 0
CODE
AREA

ACAD 15.05
1=1
D1
11:26:15
NUT48453
A1ASLDTD
10/24/06

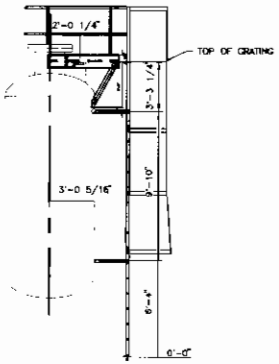

WEAK ACID CATION ELEVATION
SCALE: 1/4"=1'-0"

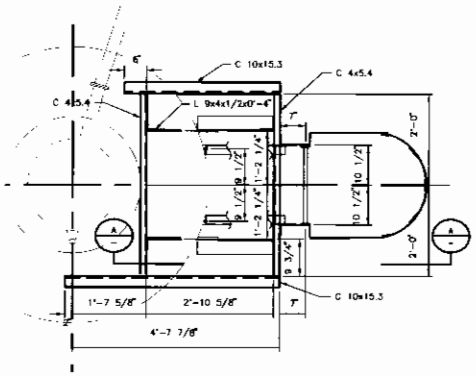

WEAK ACID CATION
PLATFORM FRAMING PLAN
SCALE: 3/4"=1'-0"

NOTES:
1. 2 ASSEMBLIES REQUIRED.
2. STEEL FRAMES, INCLUDING HANDRAIL TO BE SHOP ASSEMBLED.

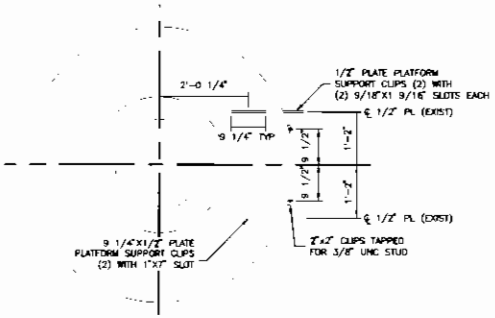

WEAK ACID CATION TANK ACCESS
LADDER AND PLATFORM MOUNTING CLIP PLAN
SCALE: 3/4"=1'-0"

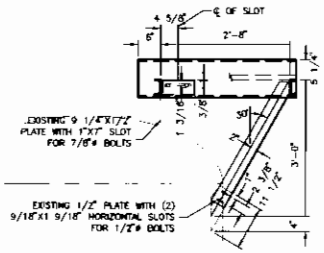

WEAK ACID CATION PLATFORM
FRAME SECTION A-A
SCALE: 3/4"=1'-0"

APPROVED FOR
CONSTRUCTION

NO	DATE	REVISIONS AND RECORD OF ISSUE	DRN	DES	CHK	PDE	APP
0	02/09/2007	ISSUE FOR CONSTRUCTION	MAHLEK			FAW	

I HEREBY CERTIFY THAT THIS DOCUMENT WAS PREPARED BY ME OR UNDER MY DIRECT SUPERVISION AND THAT I AM A DULY REGISTERED PROFESSIONAL ENGINEER UNDER THE LAWS OF THE STATE OF CALIFORNIA.
SIGNED: GRAYLYN L. GARR
DATE: 02/09/2007 REG NO. 34256

BLACK & VEATCH CORPORATION
ENGINEER: L. KASHKA DRAWN: M. MUIT
CHECKED: A. WILEY DATE: 10/30/06

BURBANK POWER & WATER
MAGNOLIA POWER PLANT

WEAK ACID CATION TANK ACCESS PLATFORMS
PLANS AND SECTIONS

PROJECT / DRAWING NUMBER: 145348-S1006
REV: 0
CODE
AREA

ACAD 15.05
D1
1=1
1:24=30
NUT48453
A1(ASD)15
02/09/06 11:24:30

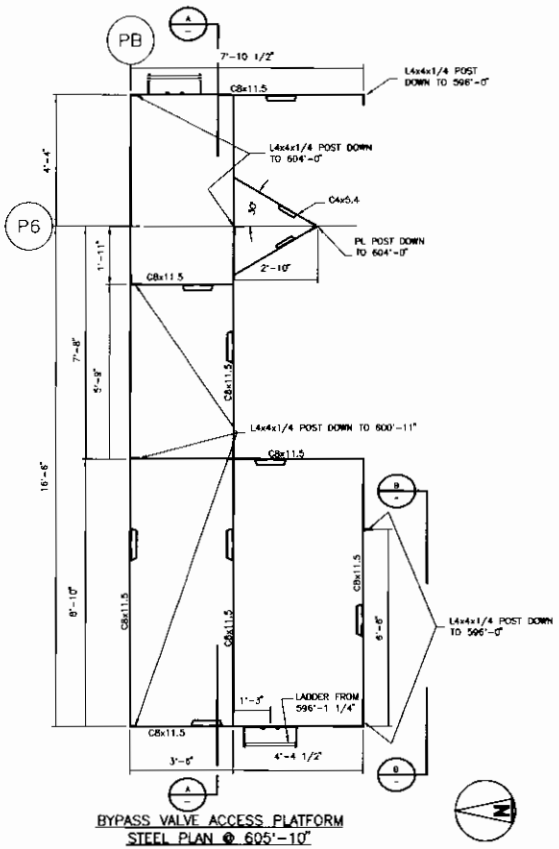

BYPASS VALVE ACCESS PLATFORM
STEEL PLAN @ 605'-10"
SCALE 1/4"=1'-0"

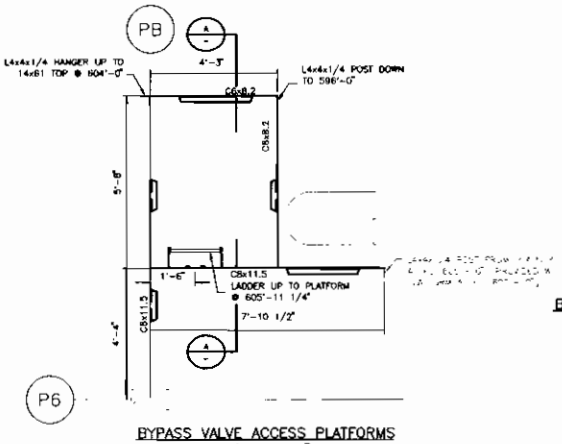

BYPASS VALVE ACCESS PLATFORMS
PLAN @ 601'-0" TOS
SCALE: 1/2"=1'-0"

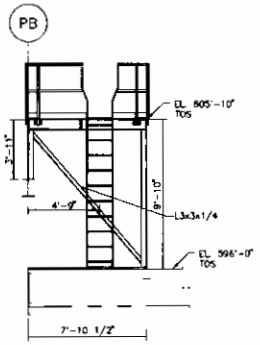

BYPASS VALVE ACCESS PLATFORMS
ELEVATION LOOKING EAST
SCALE: 1/4"=1'-0"

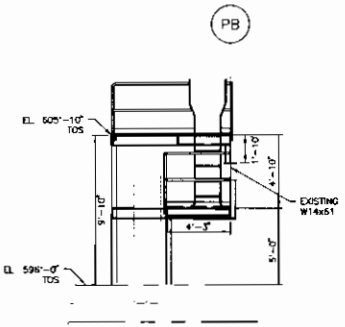

BYPASS VALVE ACCESS PLATFORMS
ELEVATION LOOKING WEST
SCALE: 1/4"=1'-0"

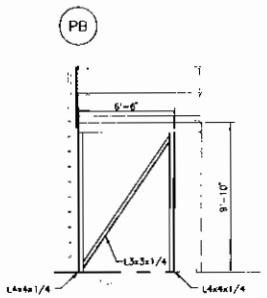

BYPASS VALVE ACCESS PLATFORMS
SECTION B-B LOOKING NORTH
SCALE: 1/4"=1'-0"

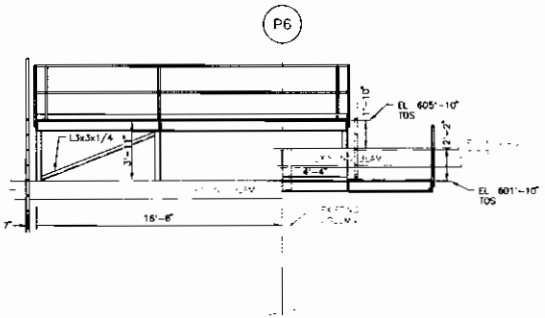

BYPASS VALVE ACCESS PLATFORMS
SECTION A-A LOOKING NORTH
SCALE: 1/4"=1'-0"

APPROVED FOR CONSTRUCTION

NO	DATE	REVISIONS AND RECORD OF ISSUE	DRN	DES	CHK	PDE	APP
0	02/09/2007	ISSUE FOR CONSTRUCTION	MANLEK			FAW	

I HEREBY CERTIFY THAT THIS DOCUMENT WAS PREPARED BY ME OR UNDER MY DIRECT SUPERVISION AND THAT I AM A DULY REGISTERED PROFESSIONAL ENGINEER UNDER THE LAWS OF THE STATE OF CALIFORNIA
SIGNED GRAYLYN L. GARR
DATE 02/09/2007 REG. NO. 54956

BLACK & VEATCH CORPORATION
ENGINEER L. KASHKA DRAWN M. HUTT
CHECKED A. WILEY DATE 11/18/06

BURBANK POWER & WATER
MAGNOLIA POWER PLANT

BYPASS VALVES MAINTENANCE ACCESS PLATFORMS
PLANS AND SECTIONS

PROJECT / DRAWING NUMBER: 145348-S1007
REV: 0
CODE
AREA

N:\7489453 ACAD 15.05
A:\S&D\15 D1 =1
12/06/06 11:22:55

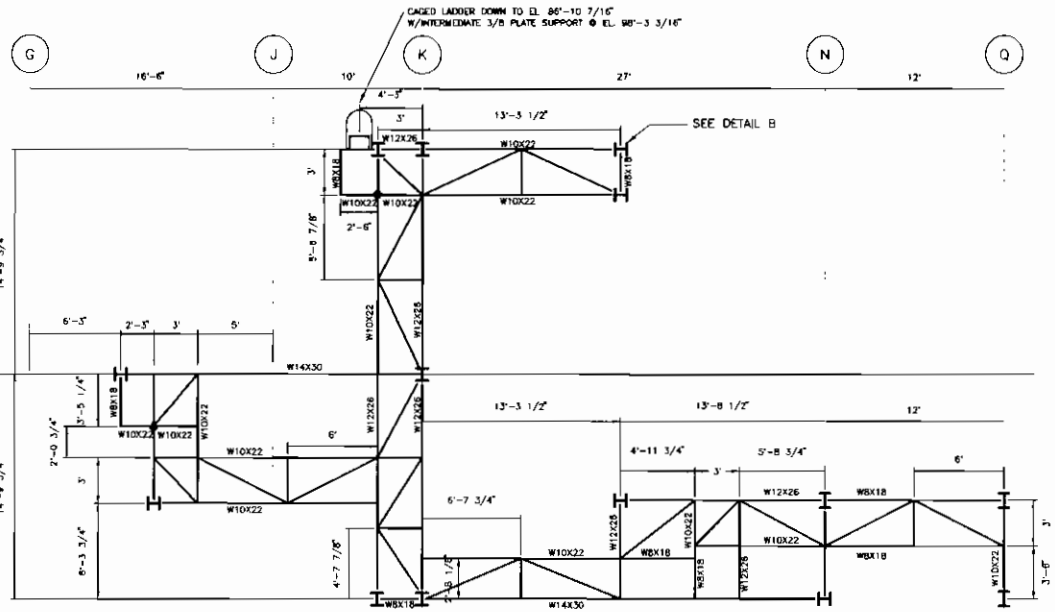

TOP OF STEEL EL. 112'-6 3/16"
SCALE 1/4"=1'-0"

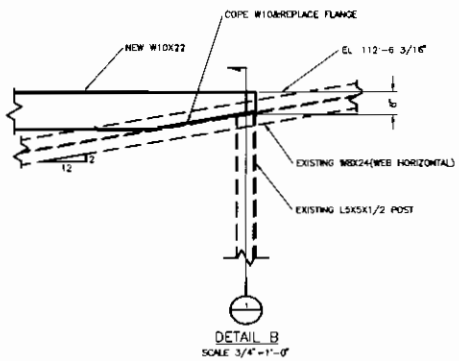

DETAIL B
SCALE 3/4"=1'-0"

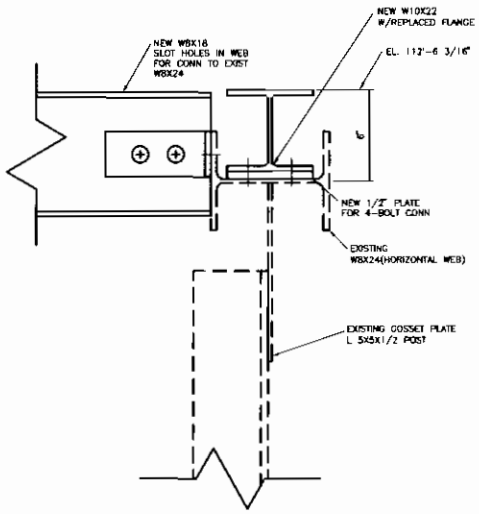

SECTION 1
SCALE 3"=1'-0"

NOTES:

1. EXISTING FRAMING TO BE FIELD DRILLED FOR 4-BOLT CONNECTION AT POSTS.
2. ALL STEEL FRAMING ON THIS SHEET SHALL BE SHOP PAINTED IN ACCORDANCE WITH COATINGS SYSTEM DATA SHEET AS OWNER WILL SELECT COLOR
3. HANDRAIL, TOE PLATE, AND GRATING SHALL BE GALVANIZED.
4. ALL DIAGONAL BRACING SHALL BE L3X3X3/16.

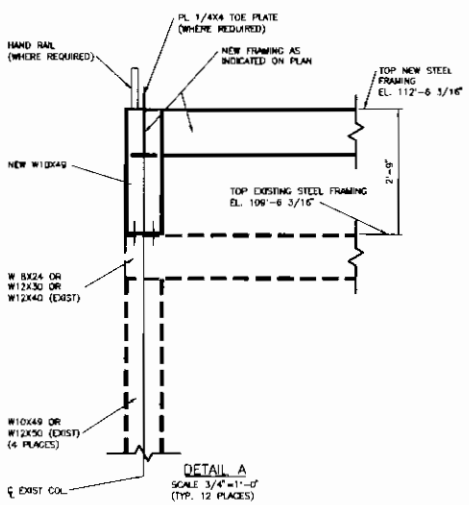

DETAIL A
SCALE 3/4"=1'-0"
(TYP. 12 PLACES)

APPROVED FOR CONSTRUCTION

NO	DATE	REVISIONS AND RECORD OF ISSUE	DRN	DES	CHK	PDE	APP
0	06/08/2007	ISSUE FOR CONSTRUCTION	MDB	LEK			FAW

I HEREBY CERTIFY THAT THIS DOCUMENT WAS PREPARED BY ME OR UNDER MY DIRECT SUPERVISION AND THAT I AM A DULY REGISTERED PROFESSIONAL ENGINEER UNDER THE LAWS OF THE STATE OF CALIFORNIA
SIGNED CAROLYN L. GARR
DATE 06/08/2007 REG. NO. 54956

BLACK & VEATCH CORPORATION
ENGINEER L. KASHKA DRAWN M.BATES
CHECKED A. WILEY DATE 11/16/06

BURBANK POWER & WATER
MAGNOLIA POWER PLANT

SILENCER ACCESS PLATFORM
PLANS AND SECTIONS

PROJECT DRAWING NUMBER 145348-S1008
REV 0
CODE
AREA

ACAD 16.1s (LMS Tech)
01 1=1
08/07/07 14:38:42
BA152451
A1APD1

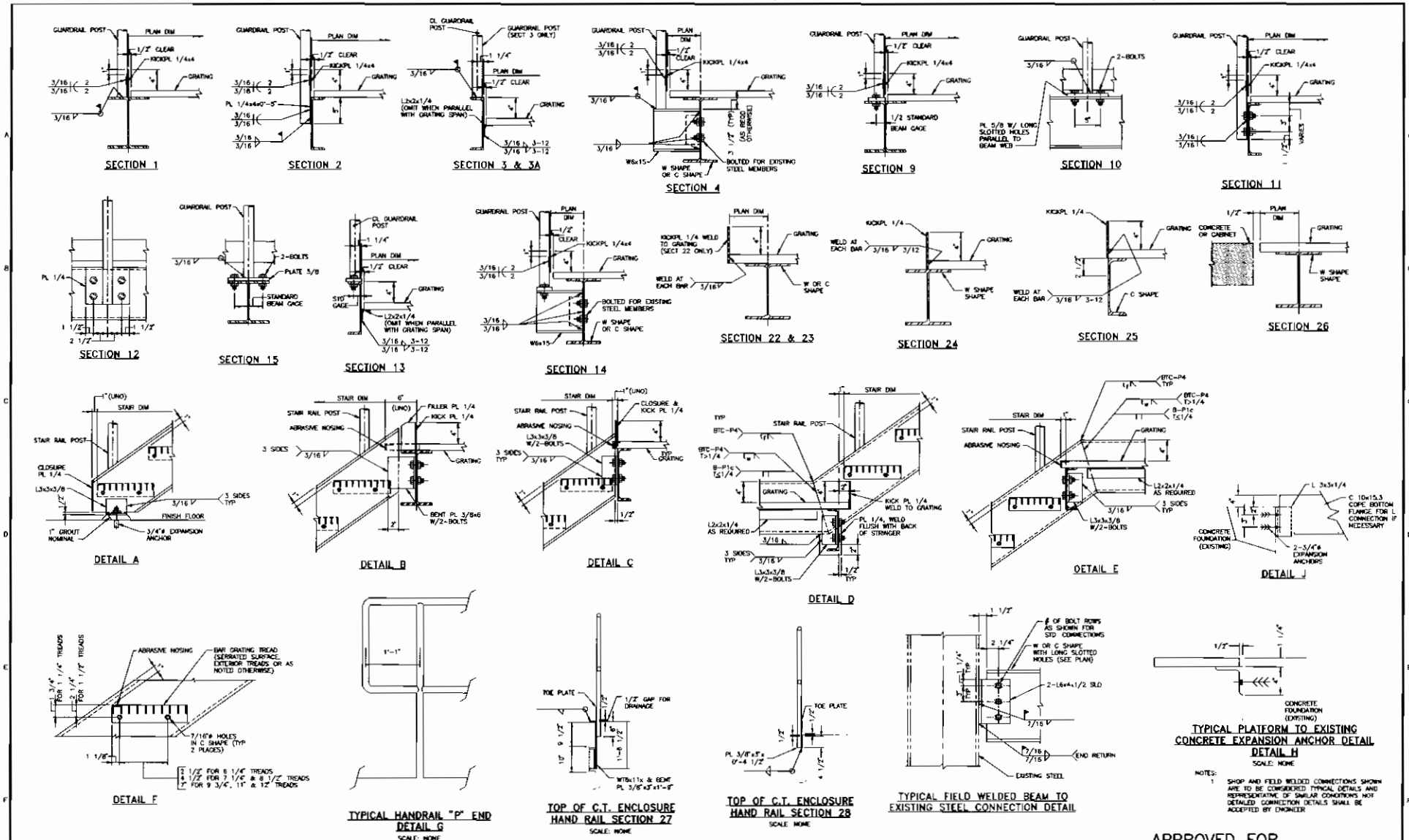

NOTES:

1. SHOP AND FIELD WELDED CONNECTIONS SHOWN ARE TO BE CONSIDERED TYPICAL DETAILS AND REPRESENTATIVE OF SIMILAR CONDITIONS NOT DETAILED. CONNECTION DETAILS SHALL BE ACCEPTED BY ENGINEER

APPROVED FOR CONSTRUCTION

NO	DATE	REVISIONS AND RECORD OF ISSUE	DRN	DES	CHK	PDE	APP
0	02/09/2007	ISSUE FOR CONSTRUCTION	MANLEK				FAW

I HEREBY CERTIFY THAT THIS DOCUMENT WAS PREPARED BY ME OR UNDER MY DIRECT SUPERVISION AND THAT I AM A DULY REGISTERED PROFESSIONAL ENGINEER UNDER THE LAWS OF THE STATE OF CALIFORNIA

SIGNED GRAYLYN L. GARB
DATE 02/09/2007 REG NO 54856

BLACK & VEATCH CORPORATION

ENGINEER L. KASHKA DRAWN M. MUTT
CHECKED A. WILEY DATE 09/27/06

BURBANK POWER & WATER
MAGNOLIA POWER PLANT

MAINTENANCE ACCESS PLATFORMS
TYPICAL SECTIONS AND DETAILS

PROJECT DRAWING NUMBER 145348-S1011
REV 0
CODE
AREA

NOTEGS3 D1 ADAD 15.05
NOTEGS3 D1 15:55:38
12/08/06

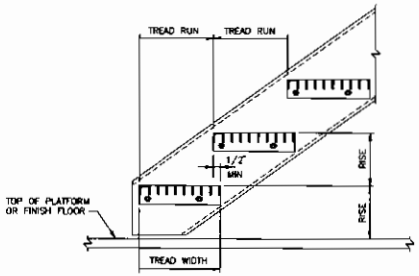

NOTES:
1. TREAD WIDTH SHALL ALWAYS BE GREATER THAN TREAD RUN BY 1/2 INCH MINIMUM.
2. FOR TREAD RUN AND RISE DIMENSIONS, SEE STAIR ELEVATION DETAILS. TREAD RUN DIMENSION ON STAIR ELEVATION DETAILS SHALL BE INDICATED BY "F" (11 T @ 11").

TYPICAL STAIR TREAD DIMENSIONS DETAIL

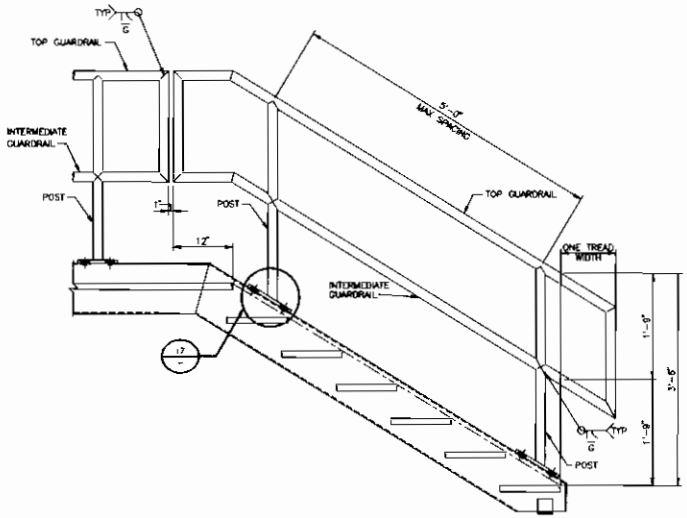

TYPICAL STAIR RAIL DETAIL

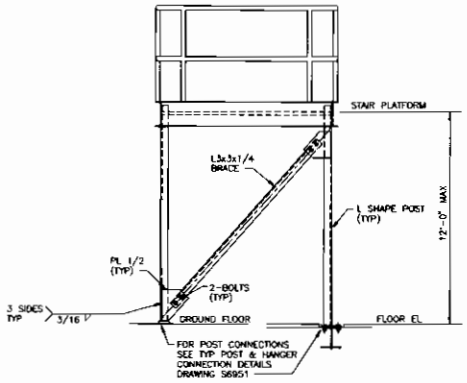

TYPICAL STAIR LANDING
ANGLE BRACING DETAIL

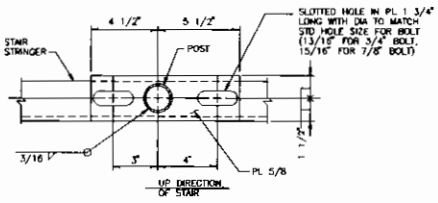

DETAIL 17

APPROVED FOR
CONSTRUCTION

NO	DATE	REVISIONS AND RECORD OF ISSUE	DRN	DES	CHK	PDE	APP
0	02/09/2007	ISSUE FOR CONSTRUCTION	MANLEX			YAM	

I HEREBY CERTIFY THAT THIS DOCUMENT WAS PREPARED BY ME OR UNDER MY DIRECT SUPERVISION AND THAT I AM A DULY REGISTERED PROFESSIONAL ENGINEER UNDER THE LAWS OF THE STATE OF CALIFORNIA
SIGNED GRANTLYN L. CARR
DATE 02/09/2007 REG. NO. 54856

BLACK & VEATCH CORPORATION
ENGINEER L. KASHKA DRAWN M. HUTT
CHECKED A. WILEY DATE 08/27/06

BURBANK POWER & WATER
MAGNOLIA POWER PLANT

STAIRS AND LANDINGS
TYPICAL DETAILS

PROJECT / DRAWING NUMBER: 145348-S1012
REV: 0
CODE
AREA

NUKAKES
ACAD 15.06
D1 A1
12/08/06 11:18:47

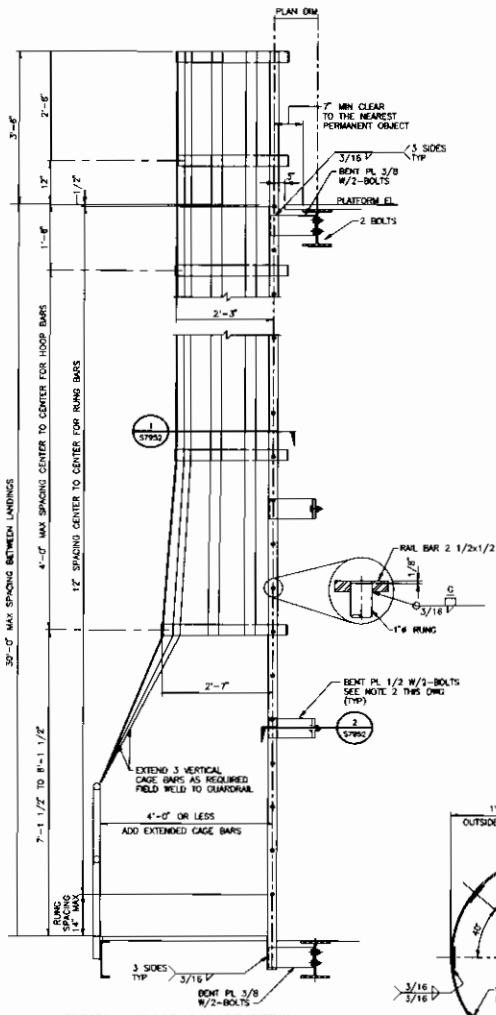

TYPICAL LADDER & CAGE DETAIL
SEE NOTES 1 AND 2

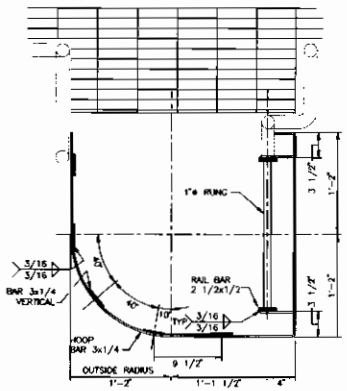

SIDE EXIT CAGE LADDER SECTION 1

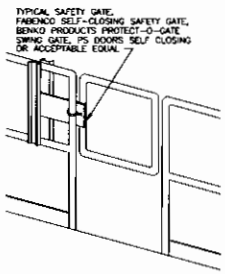

TYPICAL OSHA APPROVED SAFETY GATE

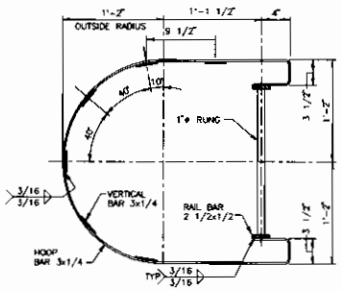

TYPICAL CAGE LADDER SECTION 1

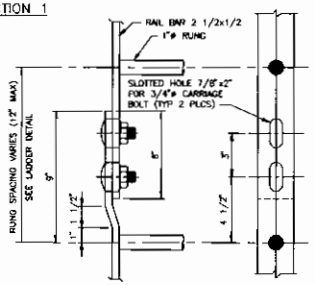

TYPICAL RAIL SPLICE DETAIL

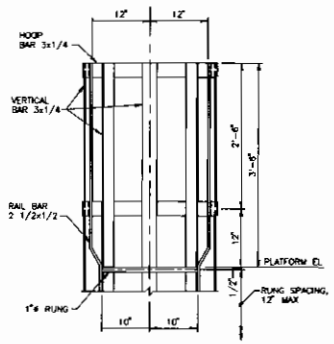

2'-0" WALK-THRU LADDER DETAIL

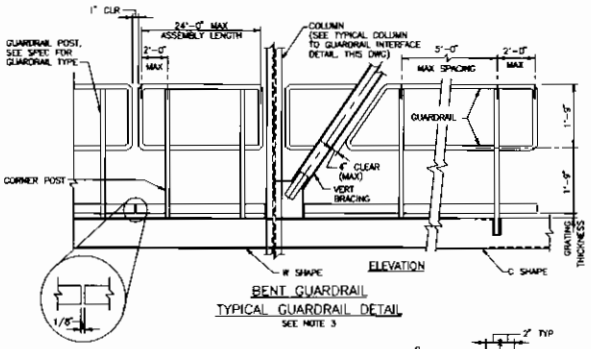

BENT GUARDRAIL
TYPICAL GUARDRAIL DETAIL
SEE NOTE 3

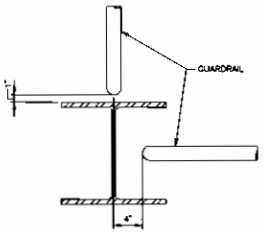

TYPICAL COLUMN TO GUARDRAIL INTERFACE

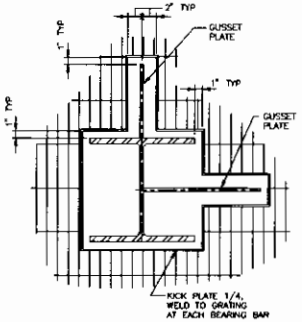

TYPICAL COLUMN OR BRACING BOXOUT

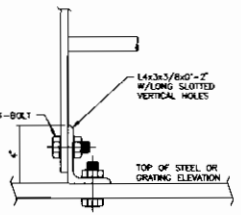

LADDER BASE CONNECTION DETAIL

DETAIL 3

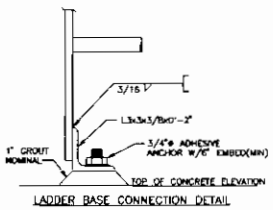

LADDER BASE CONNECTION DETAIL

DETAIL 4

NOTES

1. CAGES SHALL BE PROVIDED ON LADDERS WHERE THE LENGTH OF CLIMB IS MORE THAN 15 FEET TO A MAXIMUM UNBROKEN LENGTH OF 30 FEET OR WHERE THE LENGTH OF CLIMB IS LESS THAN 20 FEET BUT TOP OF LADDER IS MORE THAN 20 FEET ABOVE GROUND LEVEL, FLOOR OR ROOF
2. LADDER SUPPORT SPACING MAX 10'-0" CENTERS
3. REFER TO SPECIFICATION 61.4001 FOR GUARDRAIL, HANDRAIL, AND BAR GRATING TYPE AND SIZE.
4. ALL LADDER EXITS SHALL BE PROVIDED WITH A SAFETY GATE

APPROVED FOR CONSTRUCTION

NO	DATE	REVISIONS AND RECORD OF ISSUE	DRN	DES	CHK	PDE	APR
0	02/09/2007	ISSUE FOR CONSTRUCTION	MAN	LEK		FAN	

I HEREBY CERTIFY THAT THIS DOCUMENT WAS PREPARED BY ME OR UNDER MY DIRECT SUPERVISION AND THAT I AM A DULY REGISTERED PROFESSIONAL ENGINEER UNDER THE LAWS OF THE STATE OF CALIFORNIA
SIGNED GRAYLYN L. CARB
DATE 02/09/2007 REG NO 54954

BLACK & VEATCH CORPORATION
ENGINEER L. KASHKA DRAWN M. HUTT
CHECKED A. WILEY DATE 09/27/06

BURBANK POWER & WATER
MAGNOLIA POWER PLANT

MAINTENANCE ACCESS PLATFORMS
TYPICAL SECTIONS AND DETAILS

PROJECT DRAWING NUMBER: 145348-S1013
REV: 0
CODE
AREA

NOTEPAD13 ACAD 15.05
AVA5015 D1 T=1
12/08/06 11:17:58

NOTE:
1. ALUMINUM TREAD PLATE SHALL BE ATTACHED TO SUPPORT STEEL WITH COUNTERSUNK FLAT HEAD SS BOLTS

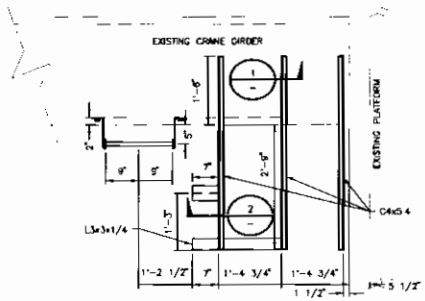

PLATFORM STEEL PLAN
SCALE: 3/4"=1'-0"

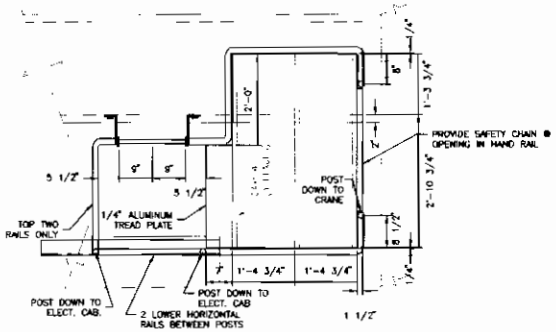

PLATFORM PLATE AND HANDRAIL PLAN
SCALE: 3/4"=1'-0"

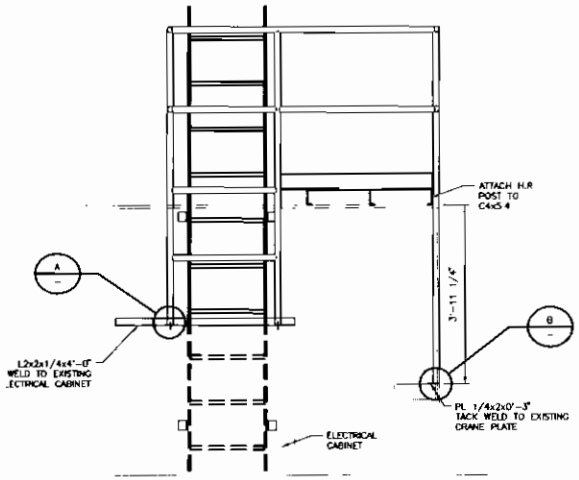

PLATFORM ELEVATION LOOKING EAST
SCALE: 3/4"=1'-0"

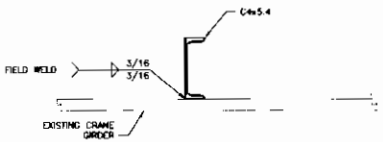

SECTION 1 (TYP 3 PLCS)
SCALE: 3/4"=1'-0"

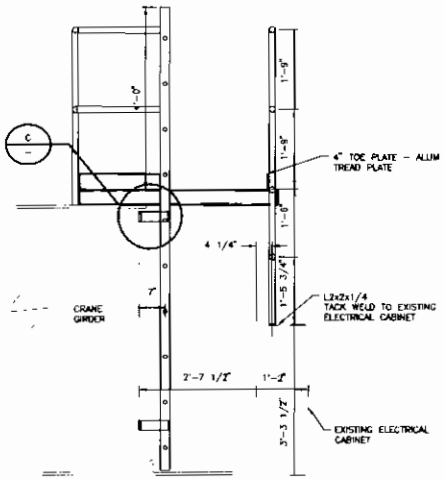

PLATFORM ELEVATION LOOKING SOUTH
SCALE: 3/4"=1'-0"

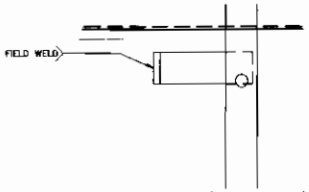

DETAIL C (TYP 4 PLCS)
SCALE: 3/4"=1'-0"

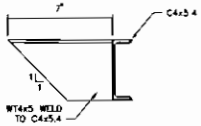

SECTION 2
SCALE: 3/4"=1'-0"

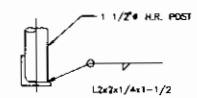

DETAIL A (TYP 2 PLCS)
SCALE: 3/4"=1'-0"

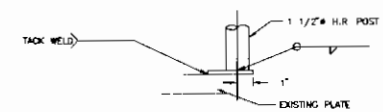

DETAIL B
SCALE: 3/4"=1'-0"

APPROVED FOR CONSTRUCTION

NO	DATE	REVISIONS AND RECORD OF ISSUE	DRN	DES	CHK	PDE	APP
0	02/09/2007	ISSUE FOR CONSTRUCTION	MAN	LEK		FAW	

I HEREBY CERTIFY THAT THIS DOCUMENT WAS PREPARED BY ME OR UNDER MY DIRECT SUPERVISION AND THAT I AM A DULY REGISTERED PROFESSIONAL ENGINEER UNDER THE LAWS OF THE STATE OF CALIFORNIA
SIGNED GRATLYN L. GARR
DATE 02/09/2007 REG NO 54956

BLACK & VEATCH CORPORATION
ENGINEER L. KASHKA DRAWN M. NUTT
CHECKED A. WILEY DATE 03/22/07

BURBANK POWER & WATER
MAGNOLIA POWER PLANT

TURBINE ROOM CRANE ACCESS PLATFORM
STEEL, HANDRAIL & PLATE PLANS & DETAILS

PROJECT DRAWING NUMBER 145348-S1015
REV 0
CODE
AREA

NUT49453 ACAD 18.1s (LMS Tech)
A1ASL015 D1 1=1
05/11/07 10:13:12

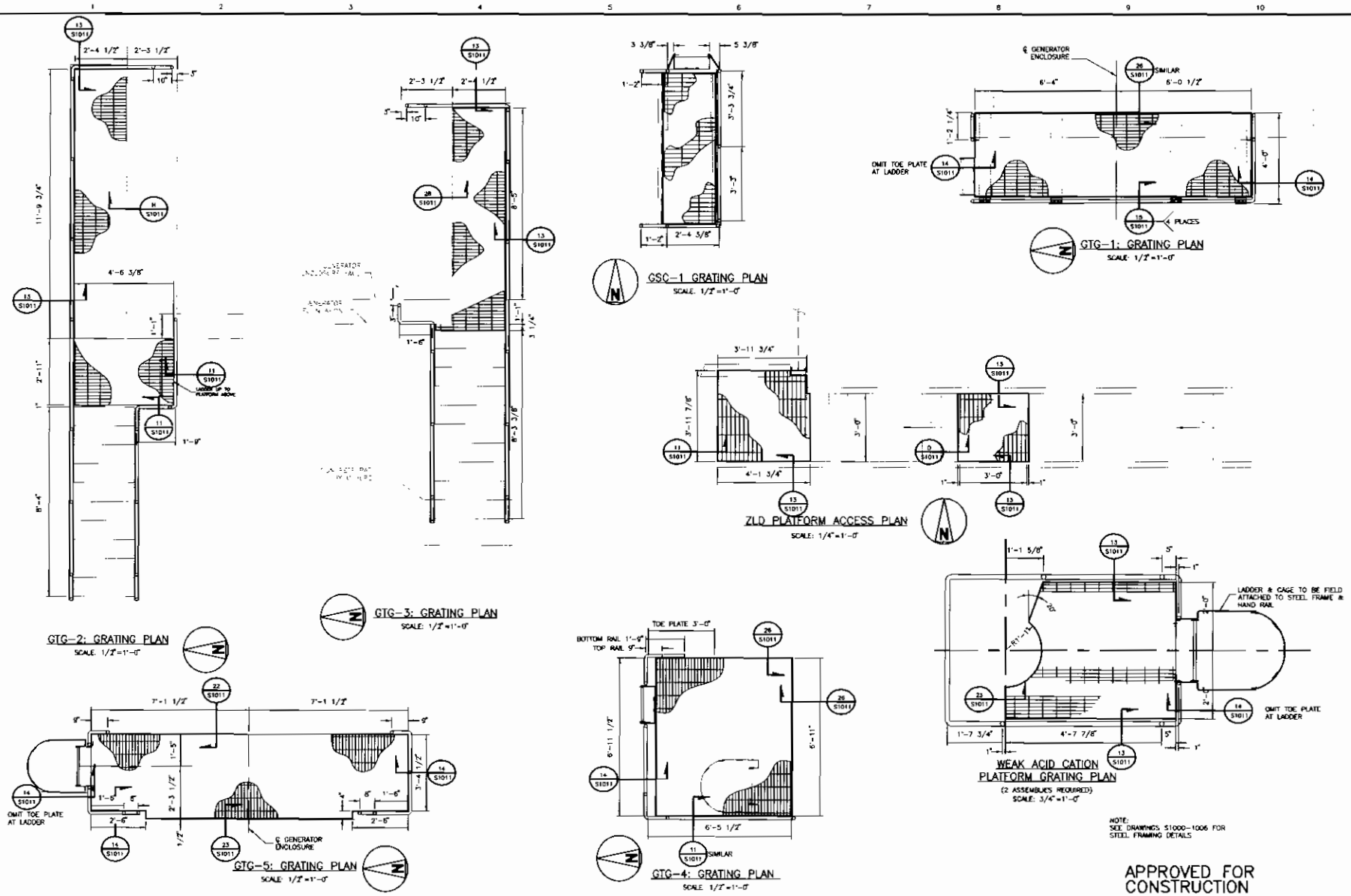

APPROVED FOR CONSTRUCTION

NO	DATE	REVISIONS AND RECORD OF ISSUE	DRN	DES	CHK	PDE	APP
0	02/09/2007	ISSUE FOR CONSTRUCTION	MANLEK		FAW		

I HEREBY CERTIFY THAT THIS DOCUMENT WAS PREPARED BY ME OR UNDER MY DIRECT SUPERVISION AND THAT I AM A DULY REGISTERED PROFESSIONAL ENGINEER UNDER THE LAWS OF THE STATE OF CALIFORNIA

SIGNED GRAYLYN L. GARR
DATE 02/09/2007 REG NO 54956

BLACK & VEATCH CORPORATION
ENGINEER L. KASHKA DRAWN M. NUTT
CHECKED A. WILEY DATE 11/21/06

BURBANK POWER & WATER
MAGNOLIA POWER PLANT

ACCESS PLATFORMS – GRATING AND HANDRAIL PLANS AND ELEVATIONS

PROJECT DRAWING NUMBER 145348-S2000 REV 0
CODE
AREA

NUT49453 ACAD 15.05
A1ASL015 D1 1=1
12/08/06 15:44:54

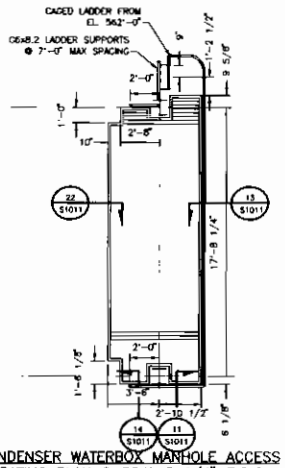

CONDENSER WATERBOX MANHOLE ACCESS GRATING PLAN @ 584'-3 1/4" T.O.G.

SCALE 1/4"=1'-0"

NOTE:
CONTRACTOR SHALL PROVIDE ANY MISCELLANEOUS GRATING SUPPORT REQUIRED AT COLUMN OPENINGS

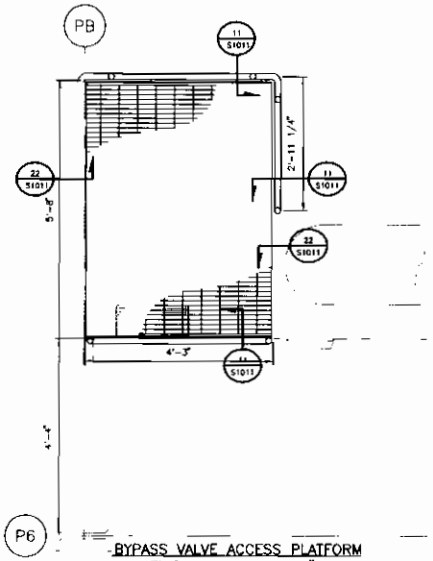

BYPASS VALVE ACCESS PLATFORM GRATING PLAN @ 601'-0" TOS

SCALE: 3/4"=1'-0"

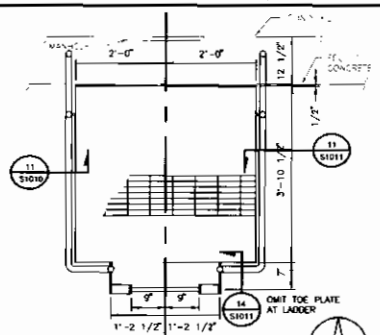

CONDENSER ACCESS PLATFORM PLAN @ 568'-6 1/4"

SCALE: 3/4"=1'-0"

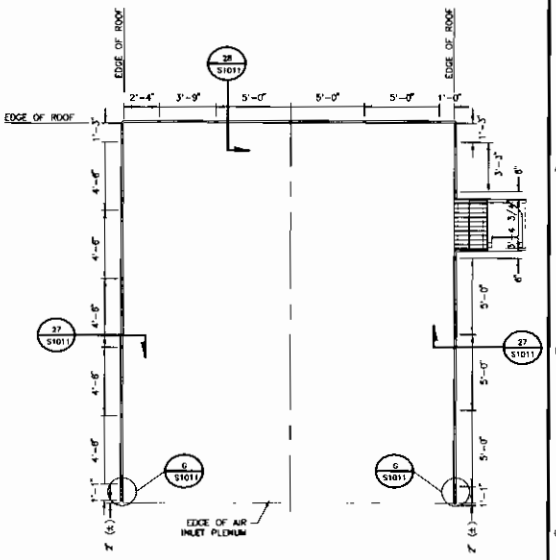

HAND RAIL PLAN AT TOP OF EXISTING C.T. ENCLOSURE

SCALE 1/4"=1'-0"

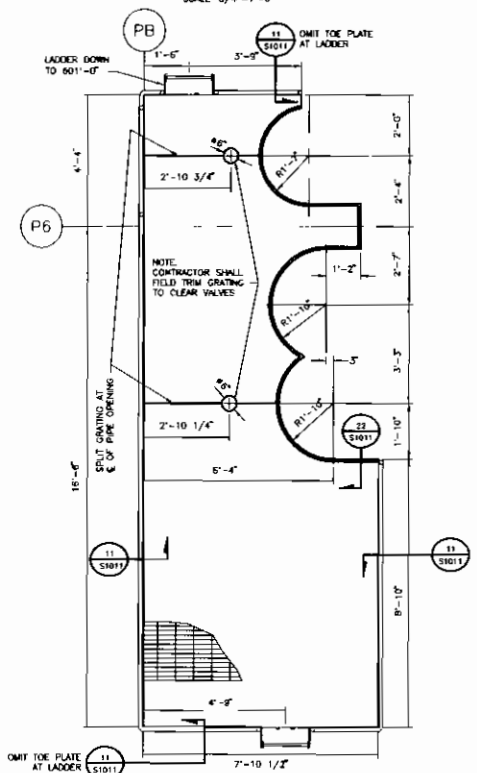

BYPASS VALVE ACCESS PLATFORM GRATING PLAN @ 605'-11 1/4"

SCALE: 1/2"=1'-0"

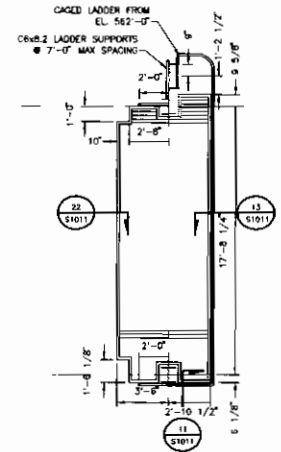

CONDENSER WATERBOX MANHOLE ACCESS GRATING PLAN @ 576'-8" T.O.G.

SCALE: 1/4"=1'-0"

NOTE:
CONTRACTOR SHALL PROVIDE ANY MISCELLANEOUS GRATING SUPPORT REQUIRED AT COLUMN OPENINGS

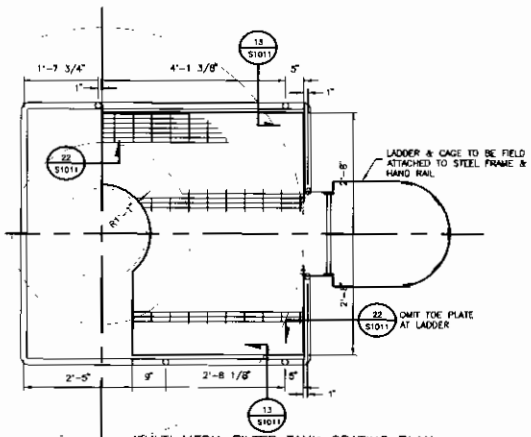

MULTI MEDIA FILTER TANK GRATING PLAN TOP OF GRATING EL. 15'-2 7/8"

SCALE: 3/4"=1'-0"
(2 ASSEMBLIES REQUIRED)

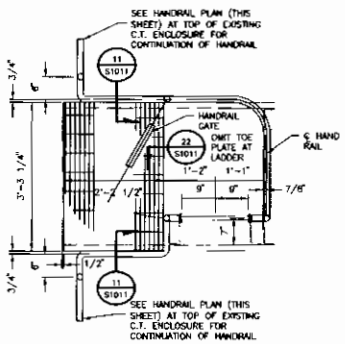

EXISTING C.T. TURB. CMPT. GRATING & HAND RAIL PLAN

SCALE: 3/4"=1'-0"

NOTE:
SEE DRAWINGS S1000-1006 FOR STEEL FRAMING DETAILS

APPROVED FOR CONSTRUCTION

NO	DATE	REVISIONS AND RECORD OF ISSUE	DRN	DES	CHK	PDE	APP
0	02/09/2007	ISSUE FOR CONSTRUCTION	MANLEY		FAM		

I HEREBY CERTIFY THAT THIS DOCUMENT WAS PREPARED BY ME OR UNDER MY DIRECT SUPERVISION AND THAT I AM A DULY REGISTERED PROFESSIONAL ENGINEER UNDER THE LAWS OF THE STATE OF CALIFORNIA
SIGNED GRAYLYN L. GARR
DATE 02/09/2007 REG NO 54436

BLACK & VEATCH CORPORATION
ENGINEER L. KASHKA DRAWN M. MUTT
CHECKED A. WILEY DATE 11/21/06

BURBANK POWER & WATER
MAGNOLIA POWER PLANT

ACCESS PLATFORMS – GRATING AND HANDRAIL PLANS AND SECTIONS

PROJECT DRAWING NUMBER 145348–S2001
REV 0
CODE
AREA

NUS49453 ACAD 16.1s (LMS Tech)
01 ACAD 02/09/07 10:37:50

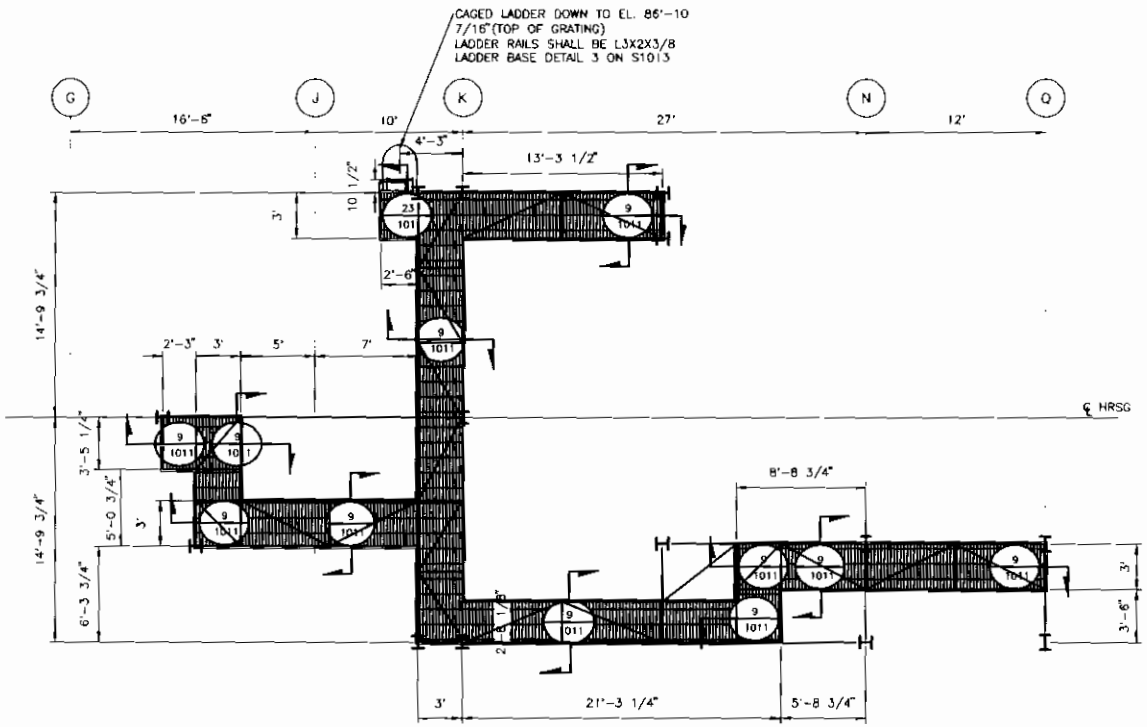

TOP OF GRATING EL 112'-7 3/16"

SCALE 1/4"=1'-0"

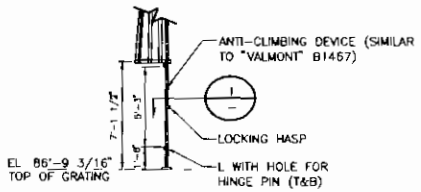

ELEVATION – LADDER ANTI-CLIMB DEVICE

SCALE 1/4"=1'-0"

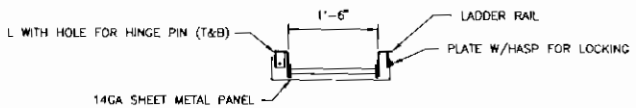

SECTION 1

SCALE 1"=1'-0"

APPROVED FOR CONSTRUCTION

NO	DATE	REVISIONS AND RECORD OF ISSUE	DRN	DES	CHK	PDE	APP
0	06/08/2007	ISSUE FOR CONSTRUCTION	MOD	LEK		FAW	

I HEREBY CERTIFY THAT THIS DOCUMENT WAS PREPARED BY ME OR UNDER MY DIRECT SUPERVISION AND THAT I AM A DULY REGISTERED PROFESSIONAL ENGINEER UNDER THE LAWS OF THE STATE OF CALIFORNIA

SIGNED GRAYLYN L. GABR

DATE 06/08/2007 REG NO. 54656

BLACK & VEATCH CORPORATION

ENGINEER L. KASHKA DRAWN M. BATES

CHECKED A. BILEY DATE 11/16/06

BURBANK POWER & WATER
MAGNOLIA POWER PLANT

ACCESS PLATFORMS–GRATING AND HANDRAIL PLANS AND SECTIONS

PROJECT DRAWING NUMBER 145348–S2002

REV 0

CODE

AREA

BATS2451 D1 A1
AUG 16,1a (LMS Tech)
08/07/07 14:36:59

Magnolia Power Project
Silencer Inspection Platform

Perspective View from Control Room

BEFORE PLATFORM **AFTER PLATFORM**

❖ NOTE - Model HRSG colors do not resemble actual installed colors.

Magnolia Power Project
Silencer Inspection Platform

Perspective View from General Manager's Office

BEFORE PLATFORM **AFTER PLATFORM**

❖ NOTE - Model HRSG colors do not resemble actual installed colors.

Magnolia Power Project
Silencer Inspection Platform

Perspective View from Magnolia Bridge

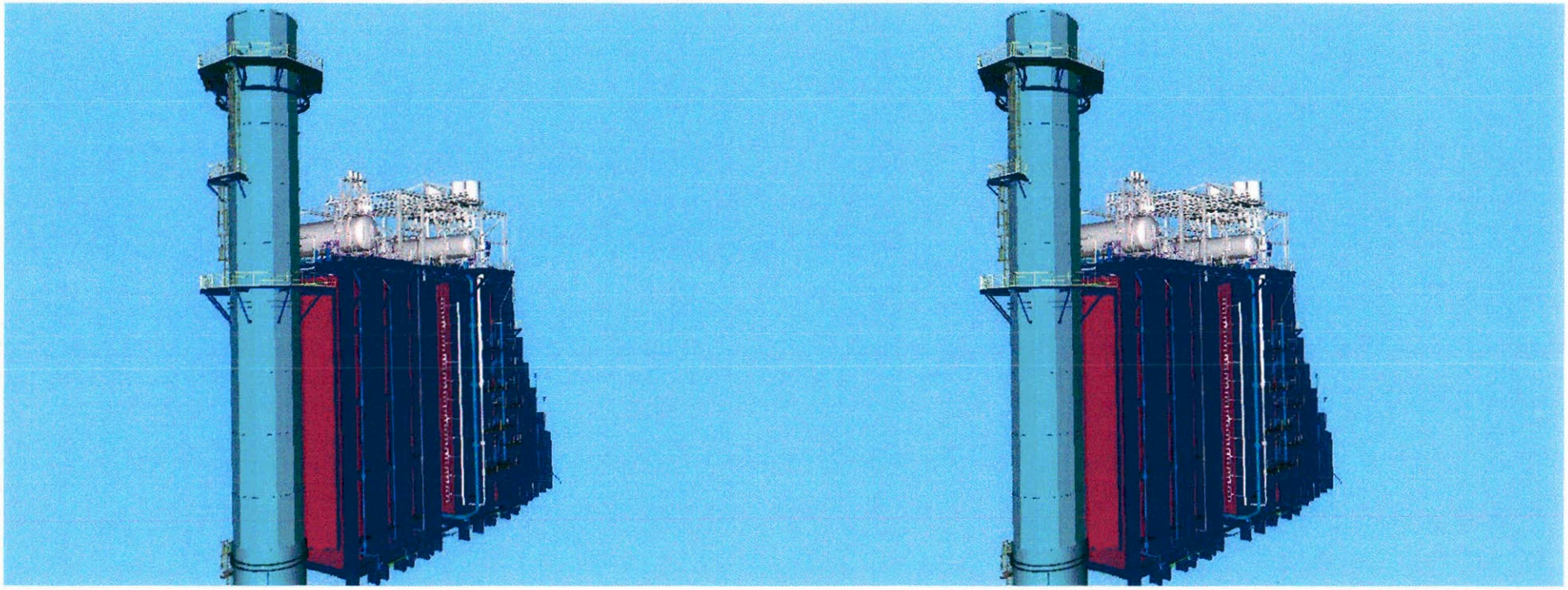

BEFORE PLATFORM **AFTER PLATFORM**

❖ NOTE - Model HRSG colors do not resemble actual installed colors.

Magnolia Power Project
Silencer Inspection Platform

Perspective View from Olive Bridge

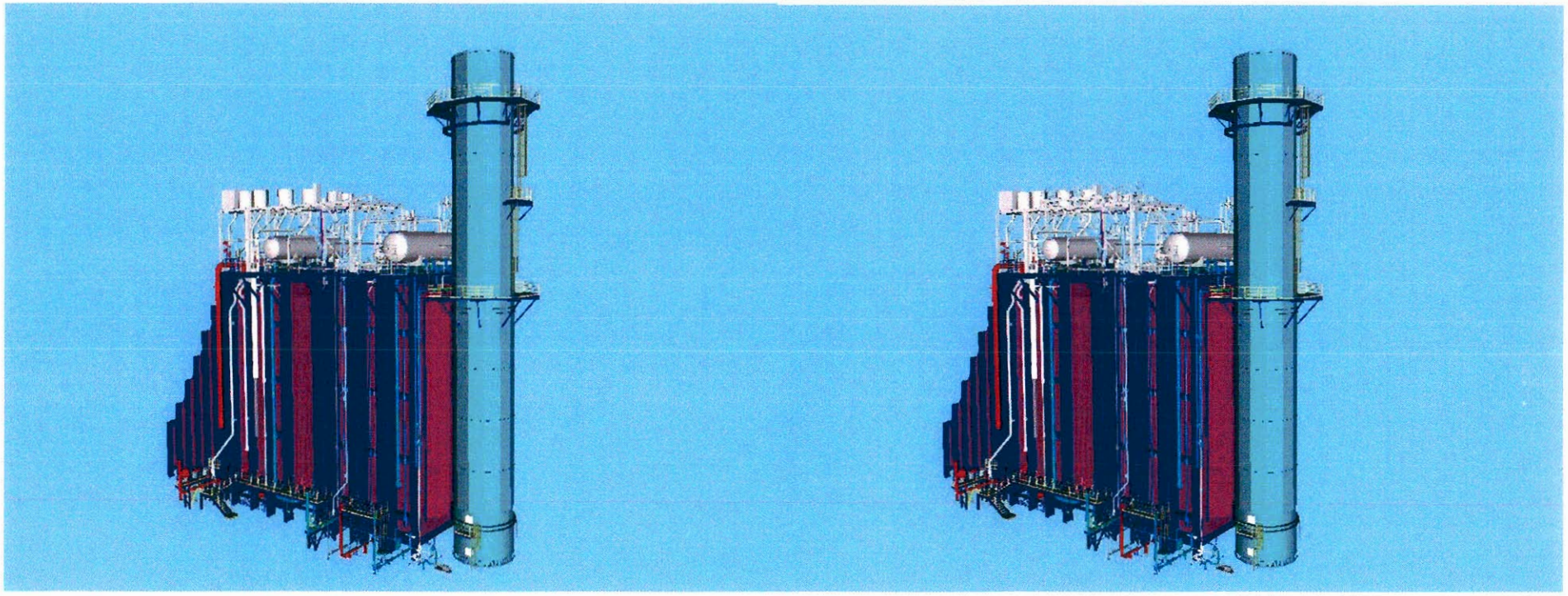

BEFORE PLATFORM **AFTER PLATFORM**

❖ NOTE - Model HRSG colors do not resemble actual installed colors.