APPENDIX 3A

Screening Level Transmission Analysis

KELSO GENERATION INJECTION TRANSMISSION SCREENING ASSESSMENT

DIAMOND GENERATING KELSO COMBUSTION TURBINE OR RECIPROCATING ENGINE OPTIONS

R·W·BECK

SCREENING-LEVEL TRANSMISSION ANALYSIS

DIAMOND GENERATING KELSO COMBUSTION TURBINES

TABLE OF CONTENTS

Page

BACKGROUND **1**

POWER FLOW ASSESSMENT **2**

Methodology and Assumptions 3

Power Flow Case Descriptions 3

Generation Dispatch 3

Generation Interconnection Queue 4

Transmission Expansion 5

Assessment Results 7

NON-BINDING ESTIMATE OF PG&E KELSO SUBSTATION INTERCONNECTION COSTS **9**

Copyright © 2008 R. W. Beck, Inc.
All Rights Reserved

July 11, 2008

Mr. Bo Buchynsky
Senior Vice President
Diamond Generating Corporation
333 S. Grand Avenue Suite 1570
Los Angeles, CA 90071

Subject: Screening-Level Transmission Analysis
Diamond Generating Kelso Combustion Turbines

Ladies and Gentlemen:

This report was prepared by R. W. Beck, Inc., at the request of Diamond Generating Corporation (Diamond), pursuant to a Professional Services Agreement dated December 19, 2007. The report presents a screening-level analysis of electricity injection capability from either 193.6 MW worth of gas-fired combustion turbines or 115.5 MW worth of gas-fired reciprocating engines, along with associated interconnection costs, for expected PG&E modifications to the Kelso Substation and interconnecting radial power line that Diamond is bidding into PG&E's 2008 All Source Long-Term Request for Offers (2008 RFO). As explained herein, the analysis is offered in partial substitute for the interconnection studies, specifically the Interconnection Feasibility Study, normally conducted by the California Independent System Operator (CAISO) and the Participating Transmission Owner (PTO).

BACKGROUND

In its 2008 RFO to supply power, PG&E asks new generators to submit certain information identifying and evaluating potential transmission impacts and interconnection issues. Appendix L to the RFO states that for those new generators with current and completed System Impact Studies (SIS) and Facilities Studies (FAS) PG&E will extract the interconnection and generator data needed from those studies. For generators that do not have a current and completed SIS and FAS, PG&E asks for certain information specified in Appendix L. Diamond Generating has filled out Appendix L since CAISO and the PTO have not initiated the Feasibility Study.

Diamond Generating submitted its interconnection application for a 193.6 MW combustion turbine project to the California Independent System Operator (CAISO) on April 4, 2008, with a proposed in-service date of June 1, 2012. The project will interconnect with PG&E at the Kelso substation 230 kV bus in Alameda County and was assigned position 334 in the interconnection queue. Diamond Generating also submitted its interconnection application for a 115.5 MW reciprocating engine project to the California Independent System Operator (CAISO) on May 7, 2008, with a proposed in-service date of June 1, 2012. The project will interconnect with PG&E at the Kelso substation 230 kV bus in Alameda County and was assigned position 366 in the interconnection queue. The Feasibility Studies for these projects would have been expected to be complete, under normal CAISO procedures, in time to be available to PG&E for review as part of the RFO review process. Owing to CAISO's submission to FERC on May 15, 2008 of revised Large Generator Interconnection Procedures (LGIP), processing of interconnection agreements and preparation of Feasibility Studies are stalled while CAISO awaits approval

of the new procedures and tariff by FERC.[1] If the FERC adopts the revised LGIP, these projects will be in the Transition Cluster Group. Interconnection studies for the Transition Cluster are slated to begin November 2008, with the initial studies completed by July 2009. Accordingly, neither the Feasibility Study nor the System Impact Study for Diamond's projects at Kelso will be complete during the period in which PG&E is evaluating RFO bids.

In developing its bid to PG&E, Diamond contracted with R. W. Beck to provide screening-level analysis of the bus injection capability and interconnection costs. R. W. Beck conducted the screening study of the PG&E electrical system, including regions with Local Resource Adequacy and transmission constraint issues, to determine locations that were electrically appropriate for locating peaking facilities. Diamond has asked R. W. Beck to summarize that analysis for presentation to PG&E with its bid, while the actual Feasibility Studies, System Impact Studies and Facilities Studies remain delayed by the LGIP revisions.

It is important to highlight the differences between R. W. Beck's screening level analysis and the contents of the Interconnection Studies. The Feasibility Study timeline is 60 calendar days and consists of a power flow analysis, a short circuit study done by the PTO and a non-binding estimate from the PTO of the cost and time to construct the interconnecting transmission line and any modifications or upgrades required at the PTO's interconnecting substation. The Feasibility Study would be followed by a System Impact Study, which also consists of a power flow analysis, a short circuit study done by the PTO, but also includes a stability study, a post transient analysis, a deliverability assessment from the ISO, and the non-binding estimate from the PTO of the cost and time to construct. The System Impact Study is followed by a Facilities Study which includes a detailed cost estimate and schedule.

The R. W. Beck analysis, in contrast, is a screening level power flow analysis (Assessment) and not the short circuit or stability analyses. The analysis does utilize the recent 2008 series Western Electricity Coordinating Council (WECC) power flow models and considers the interconnection queue as of June 6, 2008 for projects up to position number 334. R. W. Beck additionally estimated the time and cost to construct an interconnection to the Kelso substation, excluding transmission upgrades.

R. W. Beck notes that PG&E's Appendix L-1 for Transmission Proxy Costs showed that no upgrades would be needed to interconnect as much as 2000 MW at the nearby Tesla substation, which is linked to the Kelso substation via the 230 kV line to which Diamond will connect. Therefore, currently no reimbursable system / network upgrade or transmission upgrade are considered, an assumption supported by the Assessment. With regard to voltage support, Appendix L-1 indicates a level of $130 million for 2,000 MW connected at Tesla or $6.5 million per 100 MW. R. W. Beck understands that Diamond has incorporated into its bid costs the $6.5 million per 100 MW of connecting generation PG&E estimated in Appendix L for voltage support.

POWER FLOW ASSESSMENT

The Assessment concluded that Kelso 230 kV substation should support new generation up to 200 MW without substantial transmission upgrades in that the Assessment identified no limiting facilities under "N-1" contingency conditions under heavy summer conditions. The proposed peaking facility would not be considered to be dispatched during light spring conditions; however that possibility was also evaluated.

The base screening was done with the 2010 Heavy Summer Case, with three sensitivity screenings being performed to evaluate the impact on the Kelso site generation injection potential (1) under 2011 light load conditions, (2) of queued generation at Pittsburg (500 MW) and Tesla (500 MW) under 2010 Heavy Summer conditions and (3) of queued generation at Pittsburg (500 MW), Tesla (500 MW) and

[1] FERC Docket No. ER08-960-000. CAISO asked FERC for action within 45 days. Motions to Intervene and Protests were filed on May 29, 2008 and CAISO's Answer to Protests was filed on June 6, 2008. CAISO held a workshop to review the revised tariff on July 1, 2008. It is not known when FERC will act.

Contra Costa (500 MW), under 2010 Heavy Summer conditions. The Assessment identified a potential injection limitation of 179 MW under light spring conditions without the Delta pumps in service, and noting that the system configuration in the WECC approved 2011 light spring case did not include regional transmission upgrades that were modeled in the earlier 2010 heavy summer case. The regional transmission upgrades would need to be added to the 2011 light spring case and that case re-run. As a peaking facility the proposed project is not expected to be dispatched during light spring system loadings and would only be dispatched to meet system needs as determined by PG&E. The Assessment identified no limitation considering 500 MW incremental generation additions at Tesla and Pittsburg. The Assessment did show that upgrades may be required for new generation at the Kelso site and 500 MW at Contra Costa 230 kV, in addition to the previously added 500 MV at Tesla and Pittsburg.

Technical results for each scenario are included under Assessment Results.

Methodology and Assumptions

Power injection or withdrawal of power at a specific point (or node) on the interconnected transmission system causes a contribution to flow on all integrated (non radial) transmission facilities. These values can be calculated mathematically for a given system configuration but may be very small. In general, the electrically closer a facility is to the injection point (measured by impedance, not by physical distance), the greater the contribution to flow. Whether or not a particular facility is "constrained" results from the sum of all the simultaneous injection (generation) and withdrawal (load) contributions to flow on that facility. The facility flows in the cases, as in all power flow cases, represent the modeled dispatch and load level/distribution for the "snapshot(s)", and thus the results reflect planning level analyses of the selected cases.

Four scenarios were evaluated; (1) 2010 Heavy Summer, (2) 2011 Light Spring, (3) additional 500 MW at Tesla and Pittsburg under Heavy Summer conditions and (4) additional 500 MW at Tesla, Pittsburg and Contra Costa under Heavy Summer conditions. For each power flow case, incrementing levels of new generation were modeled at Kelso 230 kV substation, "N-1" contingency analyses performed for all 60 kV and higher facilities in the region, and the loading levels on all 60 kV and higher facilities monitored.

The Assessment is not intended to be all inclusive but to provide and indication of the impact of variations on system conditions and future potential resource changes. The regional dispatch assumptions for each of the four cases are shown in Table 1. Unless noted herein, no other system configuration, load or resource changes were made to the power flow cases as delivered from WECC.

Power Flow Case Descriptions

Generation injection at Kelso was evaluated using two WECC approved power flow cases, the 2010 heavy summer (10hs2sa.sav), dated October 5, 2007 and the 2011 light spring (11lspsa.sav), dated October 29, 2007. The cases were modified as discussed herein

Generation Dispatch

For the Assessment, generation in the vicinity of Kelso is maximized and the Delta Pumps were off as summarized in Table 1. If the Delta Pumps were on, there should be even less of an impact on the local interconnected electrical system.

Table 1
Regional Queued Generation Interconnection Summary

Generating Plant	Units	Max Power (MW)	Peak Load Dispatch (MW)	Light Load Dispatch (MW)	Sensitivity #1 Dispatch (MW)	Sensitivity #2 Dispatch (MW)
Altamont	1	12.5	12.5	12.5	12.5	12.5
Contra Costa (6&7)	2	680	660	660	660	1160
COG.CAPT	1	6	6	6	6	6
Delta Pumps (A-E)	5	-140	0	0	0	0
Kalina	1	6.5	6.5	6.5	6.5	6.5
Patterson Pass	1	0.4	0.4	0.4	0.4	0.4
Pittsburg (5-7)	3	1360	1360	1360	1860	1860
US Wind Power #4	1	23.8	23.8	23.8	23.8	23.8
Wind Master	1	37.6	37.6	37.6	37.6	37.6
Tres Vaq	1	15.5	15.5	15.5	15.5	15.5
Flow Ind2	1	19	19	19	19	19
Tesla (queue)	0	0	0	0	500	500

Generation Interconnection Queue

There are several queued generation projects in the region as summarized in Table 2. Each of these projects was not separately evaluated but the Assessment included a sensitivity screening where an incremental 500 MW was added at Contra Costa, Tesla and Pittsburg.

Table 2
Regional Queued Generation Interconnection Summary

Queue #	Unit Type	County	Interconnection Point	MW	Target ISD
2	CC	Contra Costa	Contra Costa Power Plant 230 kV bus	590	11/1/2009
6	CC	San Joaquin	Tesla Substation 230 kV Bus E	1156	12/31/2010
12	WT	Solano	New Birds Lnd Sw Stn near Contra Costa powerplant sub	150	3/30/2006
21	WT	Contra Costa	Windmaster/Buena Vista Sub	38	12/29/2006
24	WT	Solano	High Winds/Contra Costa PP	150	11/28/2008
37	CT	San Joaquin	Tesla Substation	75	1/1/2010
39	WT	Solano	New Birds Lnd Sw Stn near Contra Costa powerplant sub	200	12/22/2009
52	CT	Fresno	Panoche Sub Station	401	9/30/2009
54	CT	Fresno	Panoche Sub Station	120	1/1/2009
108	WT	Solano	Lambie-Contra Costsa 230 kV	128	3/1/2011
113	WT	Solano	Birds Landing	30	4/1/2009
171	WT	Solano	Vaca Tesla 500 kV line	500	12/31/2011
172	CC	San Joaquin	Tesla Bellota 230 kV line	508	5/15/2011
222	WT	Solano	Birds Landing	101	12/31/2010
235	CT	Contra Costa	Tesla-Tracy #1 230 kV line	630	6/1/2011
236	CT	San Joaquin	Tesla Substation 230 kV Bus	630	6/1/2011
248	CC	San Joaquin	Tesla-Bellota 230 kV line	67	5/15/2011
258	CC	Contra Costa	Contra Costa Substation 230 kV bus	520	2/1/2012
260	CC	San Joaquin	Loop Gold Hill-Eight Mike Road 230 kV line	260	2/1/2012
262	Recip Engine	Solano	Birds Landing Substation 230 kV bus	391	4/15/2012
267	CC	San Joaquin	Tesla-Manteca 115 kV line via Schulte Switchyard	145	4/15/2012
269	Recip Engine	San Joaquin	Tesla Substation 230 kV bus	371	4/15/2012
276	CC	Contra Costa	Contra Costa Switchyard 230 kV bus	650	1/15/2012
304	CC	Contra Costa	Contra Costa Substation 230 kV switchyard	611	7/30/2012
305	CT	San Joaquin	Tesla-Belota 230 kV and Tesla Webber 230 kV lines	200	5/1/2012
320	CC	Contra Costa	Contra Costa Substation 230 kV switchyard	475	4/29/2011
322	CC	Contra Costa	Pittsburg 230 kV Switchyard	611	9/30/2012
334	CT	Alameda	Kelso Substation 230 kV bus	194	6/1/2012
352	CT	Stanislaus	Salado Substation 115 kV	49	7/1/2009
366	Recip Engine	Alameda	Kelso Substation 230 kV bus	116	6/1/2012

Transmission Expansion

The Assessment relies on the system configuration reflected in the approved WECC cases. For validation purposes, however, a spot check on regional planned upgrades was performed. The 2007 Grid Expansion plan, dated December 6, 2007 identified an upgrade of the Pittsburg to Tesla 230 kV circuits as shown in Figure 1.

Figure 1

Kelso Site

Pittsburg to Tesla Reconductor

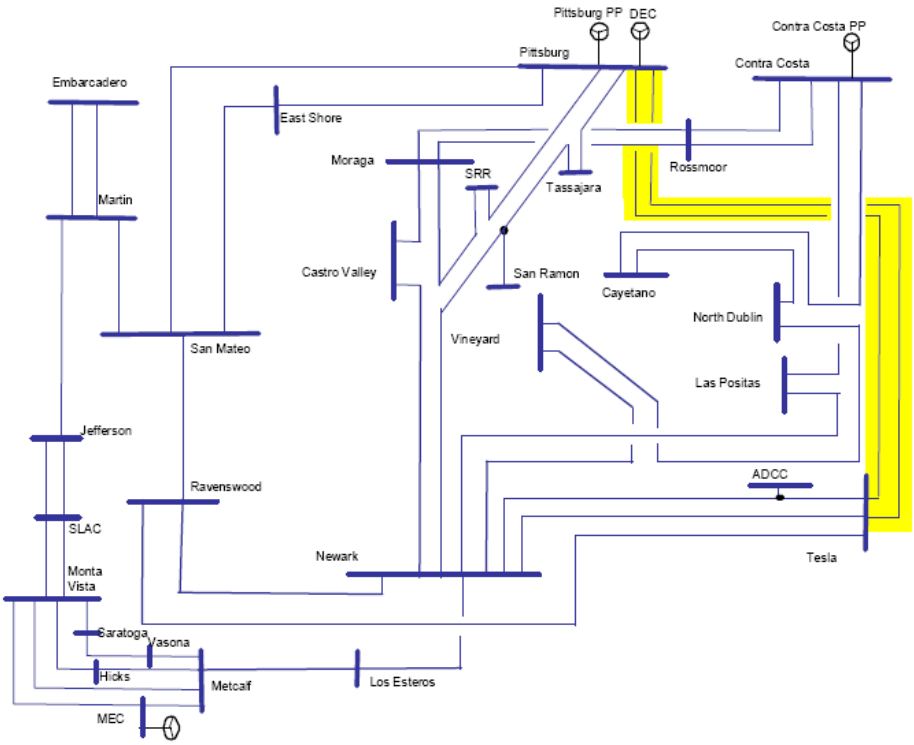

Source: PG&E's 2007 Electric Transmission Grid Expansion Plan dated Dec. 6, 2007

The Pittsburg to Tesla 230 kV upgrade was reflected in the WECC approved 2010 heavy summer case as delivered, but not in the WECC approved 2011 light spring case. Modeling of these facilities was not altered in either case as delivered for the purpose of the Assessment. However, for further review the 2011 spring light case would need to be modified to include the Pittsburg to Tesla 230 kV upgrades that are included in the 2010 heavy summer case.

A second regional addition, the TransBay Cable Project is shown in Figure 2. This underwater DC cable, designed to transmit approximately 400 MW from Pittsburg to Potrero in San Francisco is modeled in both the heavy summer and light spring cases with approximately 400 MW being transferred from Pittsburg to Potrero.

Figure 2

Kelso Site

Trans Bay Cable Map

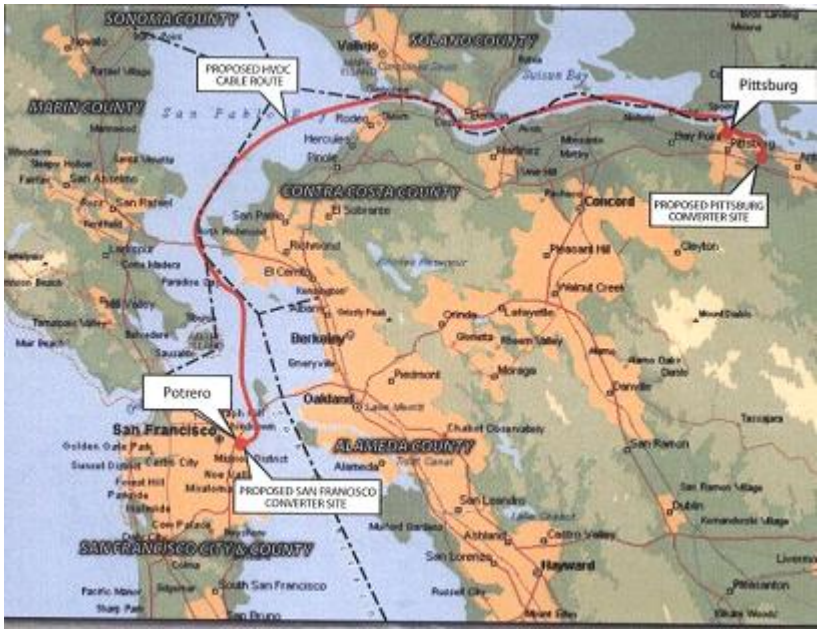

Assessment Results

Tables 3 through 6 summarize the results of the Assessment for the four scenarios evaluated (2010 Heavy Summer, 2011 Light Spring, additional 500 MW at Tesla and Pittsburg and additional 500 MW at Tesla, Pittsburg and Contra Costa).

Table 3 shows that no overloads occurred for an injection at Kelso 230 kV for up to 378 MW. If the Brentwood to Kelso 230 kV line were assumed upgraded, the next overload would occur for an injection of 433 MW at Kelso.

Table 3
Kelso Site Potential Upgrade Summary - 2010 Heavy Summer Case

Limiting Facility	Rating Norm (MVA)	Rating Emer (MVA)	Kelso Site Shift Factor (contribution to flow)	Contingency Element	Kelso Site Max Injection (MW)
Brentwod To Kelso 230 kV	397	450	-24%	Vaca-Dix To Tesla 500 kV	378
Kelso To Uswp-Rlf 230 kV	397	450	76%	Vaca-Dix To Tesla 500 kV	433
C.Costa To Brentwod 230 kV	329	450	-24%	Vaca-Dix To Tesla 500 kV	476
C.Costa To Lonetree 230 kV	296	400	2%	C.Costa To Ls Pstas 230 kV	1295
Ndublin To Vineyd_D 230 kV	296	339	2%	C.Costa To Ls Pstas 230 kV	1413
Ls Pstas To Newark D 230 kV	296	339	3%	C.Costa To Lonetree 230 kV	1492

Table 4 summarizes the Light Spring results. The Assessment showed that up to 179 MW could be added at Kelso prior to an upgrade being required even with Delta pumps off and without

Pittsburg to Tesla 230 kV upgrade that was included in the 2010 heavy summer case. Including the upgrade may impact the maximum injection at the Kelso Substation.

Table 4
Kelso Site Potential Upgrade Sensitivity - 2011 Light Spring Case

Limiting Facility	Rating Norm (MVA)	Rating Emer (MVA)	Kelso Site Shift Factor (contribution to flow)	Contingency Element	Kelso Site Max Injection (MW)
C.Costa To RossTap #2 230 kV	329	380	3.8%	C.Costa To RossTap #1 230 kV	179
RossTap #2 To Moraga 230 kV	331	380	3.7%	C.Costa To RossTap #1 230 kV	284
Uswp-Rlf 230 To Tesla D 230 kV	397	450	75.5%	Alta Mdw To Delta Pumps 230 kV	440
Brentwod To Kelso 230 kV	397	450	-24.5%	Alta Mdw To Delta Pumps 230 kV	440
Kelso To Uswp-Rlf 230 kV	397	450	75.4%	Alta Mdw To Delta Pumps 230 kV	463
C.Costa To Brentwod 230 kV	329	450	-24.4%	Alta Mdw To Delta Pumps 230 kV	495
RossTap #1 To Moraga 230 kV	331	380	3.7%	RossTap #2 To Moraga 230 kV	789
C.Costa To Ls Pstas 230 kV	353	398	3.3%	Tesla To Metcalf 500 kV	1751

Table 5 shows only a slight reduction in injection potential at Kelso for incremental additions at Tesla and Pittsburg. This sensitivity was examined to reflect that a number of generation plants are in the interconnection queue at or near these substations.

Table 5
Kelso Site Potential Upgrade Sensitivity - 2010 Heavy Summer with 500 MW at Tesla and Pittsburg

Limiting Facility	Rating Norm (MVA)	Rating Emer (MVA)	Kelso Site Shift Factor (contribution to flow)	Contingency Element	Kelso Site Max Injection (MW)
Uswp-Rlf 230 To Tesla D 230 kV	397	450	76%	Vaca-Dix To Tesla 500 kV	316
Brentwod To Kelso 230 kV	397	450	-24%	Vaca-Dix To Tesla 500 kV	377
Kelso To Uswp-Rlf 230 kV	397	450	76%	Vaca-Dix To Tesla 500 kV	430
C.Costa To Brentwod 230 kV	329	450	-24%	Vaca-Dix To Tesla 500 kV	476
Vincent To Midway 500 kV Ck#2	1848	1848	-11%	Vincent To Midway 500 kV Ck 3	1145
C.Costa To Lonetree 230 kV	296	400	2%	C.Costa To Ls Pstas 230 kV	1150
Ndublin To Vineyd_D 230 kV	296	339	2%	C.Costa To Ls Pstas 230 kV	1372

Table 6 shows that incremental generation of 500 MW at Contra Costa, 500 MW at Pittsburg and 500 MW at Tesla could result in the requirement of one regional upgrade to support the full output of Kelso. This sensitivity was examined to reflect that a number of generation plants are in the interconnection queue at or near these substations.

Table 6
Kelso Site Potential Upgrade Sensitivity - 2010 Heavy Summer with 500 MW at Tesla, Pittsburg and Contra Costa

Limiting Facility	Rating Norm (MVA)	Rating Emer (MVA)	Kelso Site Contribution to limiting facility flow	Contingency Element	Kelso Site Max Injection (MW)
C.Costa To Lonetree 230 kV	296	400	2%	C.Costa To Ls Pstas 230 kV	0
Uswp-Rlf 230 To Tesla D 230 kV	397	450	76%	Alta Mdw To Tesla D 230 kV	198
Kelso To Uswp-Rlf 230 kV	397	450	76%	Alta Mdw To Tesla D 230 kV	313
Brentwod To Kelso 230 kV	397	450	-24%	Alta Mdw To Tesla D 230 kV	378
C.Costa To Brentwod 230 kV	329	450	-24%	Alta Mdw To Tesla D 230 kV	478
Lonetree To Uswp-Jrw 230 kV	296	400	2%	C.Costa To Ls Pstas 230 kV	720
Ndublin To Vineyd_D 230 kV	296	339	2%	C.Costa To Ls Pstas 230 kV	869
Cayetano To Uswp-Jrw 230 kV	296	400	-2%	C.Costa To Ls Pstas 230 kV	909
Ls Pstas To Newark D 230 kV	296	339	3%	C.Costa To Lonetree 230 kV	933

NON-BINDING ESTIMATE OF PG&E KELSO SUBSTATION INTERCONNECTION COSTS

R. W. Beck's non-binding estimate of costs to interconnect Diamond's 193.6 MW combustion turbine project to PG&E consists of costs for costs associated with interconnecting at the PG&E Kelso Substation. The cost estimate for changes to the substation, including a 30% contingency, is $875,147. The contingency covers items that are not fully covered in the major assemblies priced out. The PG&E substation cost estimate excludes engineering, administration, construction supervision, insurance and legal costs.

Figure 3

PGE KELSO SUBSTATION TIE-IN

One Line Breaker Tied to Existing 230kV Bus

ESTIMATE OF PROBABLE CONSTRUCTION COST

TYPE ESTM: Planning Level
ESTM BY: GJM 07/15/08
CHK BY:
APPROVED BY:
ALL DOLLARS AS OF: 2008

				UNIT COSTS				ITEM COSTS				CONTINGENCY				TOTAL
						LOT				LOT	SUB			LOT	SUB	COST
ITEM	DESCRIPTION	QUAN	UNIT	MAT'L	LABOR	TOTAL	TOTAL	MAT'L	LABOR	TOTAL	TOTAL	MAT'L	LABOR	TOTAL	TOTAL	$$$$$$$
1.	Ckt Brkr. 1200A 230 kV(1)	1	ea			$225,000	$225,000	$0	$0	$225,000	$225,000	20%	40%	30%	$67,500	$292,500
2.	Gang Oper Disconn Sw 1200A 230 kV (2)	2	ea			$40,000	$40,000	$0	$0	$80,000	$80,000	20%	40%	30%	$24,000	$104,000
3.	PT 230 kV (2)	1	ea			$30,000	$30,000	$0	$0	$30,000	$30,000	20%	40%	30%	$9,000	$39,000
4.	LA 230 kV(2)	3	ea			$10,000	$10,000	$0	$0	$30,000	$30,000	20%	40%	30%	$9,000	$39,000
5.	Grounding 4/0 Copper (2)	1200	lb			$28	$28	$0	$0	$33,600	$33,600	20%	40%	30%	$10,080	$43,680
6.	Bus Insulators (1)	9	ea			$2,000	$2,000	$0	$0	$18,000	$18,000	20%	40%	30%	$5,400	$23,400
7.	Bus, Bus Supports, Equip. Supports	1250	lb			$13	$13	$0	$0	$16,250	$16,250	20%	40%	30%	$4,875	$21,125
8.	Lightning Masts (2)	1	ea			$10,000	$10,000	$0	$0	$10,000	$10,000	20%	40%	30%	$3,000	$13,000
9.	Ground Rods 10' 3/4"(2)	20	ea			$227	$227	$0	$0	$4,540	$4,540	20%	40%	30%	$1,362	$5,902
10.	Dead End Structure (1)	1	ea			$50,000	$50,000	$0	$0	$50,000	$50,000	20%	40%	30%	$15,000	$65,000
11.						$0	$0	$0	$0	$0	$0	20%	40%	30%	$0	$0
12.	Concrete (2)	70	cy			$370	$370	$0	$0	$25,900	$25,900	20%	40%	30%	$7,770	$33,670
13.	Relay Mods to Existing Sub (1)	1	ea			$50,000	$50,000	$0	$0	$50,000	$50,000	20%	40%	30%	$15,000	$65,000
14.	Control Wiring (1)	1	lot			$75,000	$75,000	$0	$0	$75,000	$75,000	20%	40%	30%	$22,500	$97,500
14.	RTU (1)	1	ea			$10,000	$10,000	$0	$0	$10,000	$10,000	20%	40%	30%	$3,000	$13,000
15.						$0	$0	$0	$0	$0	$0	20%	40%	30%	$0	$0
16.						$0	$0	$0	$0	$0	$0	20%	40%	30%	$0	$0
17.							$0	$0	$0	$0	$0	20%	40%	30%	$0	$0
18.	UG Conduit 4x4" Sched 80 Direct Bury (2)	300	lf			$21	$21	$0	$0	$6,300	$6,300	20%	40%	30%	$1,890	$8,190
19.	Excavation and Backfill (2)	220	cy			$20	$20	$0	$0	$4,400	$4,400	20%	40%	30%	$1,320	$5,720
20.	Crushed Stone 6" (2)	420	cy			$10	$10	$0	$0	$4,200	$4,200	20%	40%	30%	$1,260	$5,460
21.							$0	$0	$0	$0	$0	20%	40%	30%	$0	$0
	TOTALS										$673,190				$201,957	$875,147

Notes:
(1) Based on office data/experience
(2) From RS Means data with adjustments
(3) Engineering, Adminstration, PG&E Overheads, Construction Supervision, Insurance, Land and Legal costs not included

Respectfully submitted,

R. W. BECK, INC.