2.0 PROJECT DESCRIPTION

2.1 INTRODUCTION

The proposed Marsh Landing Generating Station (MLGS) will consist of new natural-gas–fired generation facilities and ancillary systems. The proposed project consists of construction of new generating units that will become the MLGS; construction of electric and gas transmission lines adjacent to the facility; construction of water supply and wastewater pipelines; and construction of a water treatment facility at the Delta Diablo Sanitation District (DDSD) Bridgehead Lift Station (BLS).

The new MLGS units are to be constructed wholly within the existing Contra Costa Power Plant (CCPP) site. The generator output from the MLGS will be stepped-up to 230-kV transmission voltage and consists of four power blocks: two Siemens Flex Plant 10 (FP10) combined-cycle units; and two Siemens 5000F combustion turbine units operating in simple-cycle mode (Simple Cycle units). The FP10 combined-cycle units will be intermediate-load power blocks, expected to operate at 40 to 50 percent capacity factor, and generating approximately 550 megawatts (MW) (net) when both are operated together at a temperature of 75 degrees Fahrenheit (°F) and 54 percent relative humidity. The MLGS FP10 units will use air-cooled heat exchanger technology to reduce consumptive water use. The simple-cycle power blocks will provide peaking power and are expected to operate at less than 10 percent capacity factor, generating approximately 380 MW (net) when operated together at 75°F temperature and 54 percent relative humidity. Commercial operation for the FP10 combined-cycle units is expected by summer 2012. Commercial operation for the Simple Cycle units could be as early as summer 2011.

The MLGS will redevelop approximately 27 acres of the CCPP site that are currently occupied by five fuel storage tanks, temporary buildings, and other ancillary facilities. Construction of the new power generation facility is expected to occur over a 33-month period (from October 2009 through June 2012). Construction is expected to cost approximately $800 million (in 2008 dollars).

As shown on Figure 2.1-1, all construction laydown and parking areas will be within the CCPP site. The MLGS will be interconnected to the existing Pacific Gas and Electric Company (PG&E) switchyard located adjacent to the MLGS site. The MLGS will use natural gas that will be delivered via a new pipeline that connects to the PG&E's interstate gas transmission Line 400, which runs along the eastern boundary of the Gateway Generating Station (GGS) site. The process water source will be recycled water from the DDSD system. Two offsite water lines approximately 1-mile-long will be constructed to bring recycled water from and return wastewater to DDSD's BLS. Potable water will be supplied by the City of Antioch.

The BLS is an existing facility operated by DDSD. As a part of the proposed project, new treatment facilities will be constructed on a portion of the 3.4-acre site to produce recycled water that can be used by the MLGS. The treatment facilities will be constructed, owned, and operated by DDSD.

2.2 MLGS SITE LOCATION

Figure 2.2-1 shows the project location in relation to the surrounding area. The MLGS will be located within the existing CCPP site, Assessor's Parcel Number (APN) 051-031-014, in unincorporated Contra Costa County, California. The MLGS site is located on Sections 16, Township 2 North, Range 2 East, on the U.S. Geological Survey (USGS) Antioch North Topographic Quadrangle Map. The MLGS will be situated on a parcel of approximately 27 acres that will be created by a subdivision of the existing single parcel that constitutes the site of the CCPP. The parcel will be purchased by Mirant Marsh Landing, LLC from Mirant Delta, LLC.

The MLGS site is located about 1/10 mile from the City of Antioch limits. Proceedings are under way to annex the MLGS site and adjacent land into the City of Antioch. The site is surrounded by the San Joaquin River to the north and industrial uses to the south, east, and west.

2.3 OTHER PROJECT COMPONENT LOCATIONS

Several of the components of the proposed project will be located outside of the proposed MLGS boundary but within the CCPP, or directly adjacent. Construction laydown and parking areas, approximately 14 acres, will all be located within the CCPP site at 3201 Wilbur Avenue on previously disturbed, graded, or paved areas of the power plant site. The gas interconnection line will run east from the MLGS compressor building through the CCPP site to an existing gas transmission line (Line 400) adjacent to the GGS site. The underground gas line will occupy an existing easement across the GGS site. Electric transmission lines will connect directly to the PG&E switchyard adjacent to the MLGS site (see Figure 2.1-1).

Water transmission lines and treatment facilities will be located offsite of the MLGS and CCPP. The proposed project will connect to an existing potable water line that runs north-south through the CCPP property to the City of Antioch water line that is located along Wilbur Avenue. In addition, two approximately 1-mile-long water pipelines will be constructed between the MLGS site to the DDSD's BLS to deliver recycled water and return wastewater. These water lines traverse a portion of the CCPP site, run along Wilbur Avenue in the existing right-of-way, and enter the BLS site from the north, as shown on Figure 2.1-1. Water treatment facilities will be constructed at DDSD's BLS to produce recycled water for the project site.

The BLS is an existing facility located on a 3.4-acre parcel on Bridgehead Road in the City of Antioch, APN 051-051-024.

2.4 SITE ACTIVITIES THAT ARE NOT PART OF THE PROPOSED PROJECT

The MLGS will be adjacent to the existing CCPP, which includes seven existing units. CCPP Units 1-5 have been retired, and Units 6 and 7 produce electricity for sale into the wholesale power market. The retired CCPP Units 1-5 are arrayed along a large, centralized turbine building. Units 6 and 7 are conventional gas-fired boiler units in a common structure just east of the turbine building. In addition, the site includes an existing water treatment plant, a 29 percent aqueous ammonia storage facility, as well as water intake and discharge facilities. The CCPP site has ongoing maintenance and capital improvement projects that may occur prior to the development of the MLGS. These projects are not directly or indirectly connected to the MLGS, and therefore are not part of the project.

As a part of CCPP's ongoing maintenance, Mirant Delta plans to drain, clean and demolish all of the existing tanks at the CCPP (i.e., Tanks 1 through 8) in 2008. Should this not occur, demolition of Tanks 1 through 5 will occur as a part of the MLGS project construction. Therefore, for the purposes of the AFC, demolition of Tanks 1 through 5 is discussed and analyzed.

In addition, PG&E, on the parcel to the east of the CCPP, is currently constructing the Gateway Generating Station (GGS), a new generation facility approved by the CEC in May 2001 (Docket Number 00-AFC-1) and amended in 2007. Construction is expected to be completed in early 2009, prior to the commencement of construction of the MLGS. Activities associated with the construction and operation of the GGS are not a part of this project.

2.5 POWER GENERATION FACILITY

The MLGS project will consist of a 930 MW facility with four power blocks: two Siemens FP10 combined-cycle units and two Siemens 5000F Simple Cycle units. Each of the four combustion-gas

turbines and two steam turbines will be connected to separate electric generators. The generators for the MLGS will be interconnected to the PG&E switchyard located adjacent to the CCPP site. The MLGS will be interconnected to the transmission grid, and power generated by the facility will be available to serve energy needs throughout California.

2.5.1 Power Plant Site Arrangement

The following sections describe the power generation facility site arrangement, process flow diagrams, heat and material balances, major equipment, and ancillary systems (including buildings and structures) that constitute the proposed project. The MLGS will be designed, constructed, and operated in accordance with applicable laws, ordinances, regulations, and standards (LORS). In addition, the power plant facilities will be designed and constructed in accordance with the design criteria provided in Appendices A through E.

The site arrangement drawings (plot plans, elevation views, and an oblique aerial view of the proposed power generation facility) are shown on Figures 2.5-1a-c, 2.5-2, 2.5-3, and 2.5-4, respectively.

2.5.2 Process Description

This section describes the power generation process that will be employed by the MLGS. The power generation facility will consist of four power block areas: the two Siemens FP10 combined-cycle units; and the two Siemens 5000F Simple Cycle units (see Figure 2.5-1a).

2.5.2.1 Siemens Flex Plant 10 Units

Each Siemens FP10 combined-cycle unit includes one combustion turbine generator (CTG) equipped with ultra low NO_X combustors and inlet air evaporative cooler, one heat recovery steam generator (HRSG), one steam turbine generator (STG), an air-cooled heat exchanger (ACHE), and associated auxiliary systems and equipment (see Figure 2.5-1b). Fuel for the CTGs will be pipeline-quality natural gas.

The average net generating capacity of each of the FP10 units will be approximately 275 MW. The actual net output of the system will vary in response to ambient air temperature conditions, use of evaporative coolers, use of power augmentation, amount of auxiliary load, generator power factor, firing conditions of the combustion turbines, and other operating factors. Full load output (net) of the facility under expected operating conditions will range from approximately 265 MW to 285 MW. The FP10 units can operate at partial load, with the CTGs operating down to minimum load (60 percent) while keeping the STG on-line or off-line. Operational modes will be driven by good operating practices, market conditions, and dispatch requirements.

The overall annual availability as measured by Equivalent Availability Factor (EAF) of the FP10 combined-cycle units is expected to be in the range of 92 to 98 percent. The power plant's annual output will depend on market conditions and dispatch requirements. The design of the power plant will provide for operating flexibility (i.e., ability to start up, shut down, turn down, and provide peaking output) so that operations may be readily adapted to changing conditions in the energy and ancillary services markets.

Each FP10 unit is designed to start and ramp up to 150 MW in 10 minutes and still be capable of operating with combined-cycle efficiency. The fast-start capability, evaporative cooling, and power augmentation are advantageous to meet changing market conditions. The FP10 combined-cycle units have the additional benefit of reducing start-up emissions compared to a conventional combined-cycle plant. The HRSG at the CTG exhaust is designed for fast start and incorporates a conventional proven selective catalytic reduction (SCR) design, oxidation catalysts, to achieve the guaranteed emissions at load. The FP10 combined-cycle unit design also incorporates an ACHE at the STG exhaust, which

eliminates the requirement for a cooling tower and allows each unit to operate with minimal water consumption. The compact layout of the FP10 combined-cycle units, low emissions, and low water consumption facilitate plant siting.

The process flow diagram for the FP10 units is shown on Figure 2.5-5. The heat and material balances for the facility are also shown on the same figure and in Table 2.5-1a. Three cases are shown on the figure for the FP10 units: summer design conditions (94°F), average conditions (75°F), and extreme winter conditions (20°F). For the summer and average conditions, evaporative cooling is included for both power blocks. In addition, when operating at 100 percent load, power augmentation may be used in the FP10 units. For the winter case, neither evaporative coolers nor power augmentation are in operation. The winter case is the lowest temperature at which the units would reasonably be expected to operate.

Air will flow through the CTG inlet air filter, evaporative coolers, and associated ductwork to the CTG compressor section. The compressed air from the compressor section flows to the CTG combustor section, where it is mixed with compressed natural gas, and ignited. The hot combustion gases flow through the CTG turbine expander section, which drives both the CTG compressor section and the electric generator. The combustion gases exit the turbine expander section and enter the inlet duct of the HRSG.

The hot flue gas then enters the HRSG's steam generation section, where heat from the combustion turbine exhaust gases is transferred to water being pumped through the HRSG steam-generation components (economizer, evaporator, drum, superheater). The water is converted to steam, superheated, and delivered to the STG. Steam expands through the STG, driving the generator. Exhaust steam from the STG enters the ACHE, where it is condensed into water, deaerated, and recycled back to the HRSG as boiler feed water. The absorbed heat from the ACHE is ejected to the atmosphere.

Power augmentation may be used during peak demand periods by injecting steam from the HRSG into the gas turbine compressor discharge and/or combustors to boost power output.

Each HRSG produces high-pressure (HP) steam. The HP system consists of economizer, evaporator, and superheater heating surfaces, and uses a separator and surge tank (drum) for steam/water separation. A feed pump delivers water to the economizer sections where it is preheated before being discharged into the evaporator sections. From the evaporator section, the steam enters a separator and a surge tank before entering the superheater. The final steam temperature is controlled by feedwater flow modulation and the use of an attemperator.

Each HRSG will be equipped with an emissions control system to include a SCR and carbon monoxide (CO) catalyst, an ammonia system, a continuous emissions monitoring system (CEMS), and stack.

2.5.2.2 Siemens 5000F Simple Cycle Units

The Siemens 5000F Simple Cycle units will consist of two Siemens 5000F natural-gas–fired CTGs (see Figure 2.5-1c). The nominal net generating capacity of each Simple Cycle turbines will be approximately 190 net MW. The actual output of the system will vary in response to ambient air temperature conditions and the use of evaporative coolers. Full load output of a Simple Cycle unit under expected operating conditions will range from approximately 180 net MW to a peak of 220 net MW. The units can also operate at partial load with one or both CTGs running at minimum load. Operational modes will be dictated by energy demand and market price. The overall annual availability as measured by EAF of the Simple Cycle units is expected to be approximately 94 to 98 percent.

The process flow diagram for the simple-cycle generation process is shown on Figure 2.5-6. The heat and material balances for the facility are shown on the same figure, and in Table 2.5-1b. Three cases are shown on the figure: summer design conditions (94°F), average conditions (75°F), and extreme winter

conditions (20°F). For the summer and average cases, evaporative coolers are in operation; the evaporative coolers are not in operation in the winter case. The winter case is the lowest temperature that the units would reasonably be expected to operate.

Each simple-cycle CTG will be equipped with an emissions control system to include a SCR and oxidation catalyst, an ammonia system, tempering air skids, a continuous emissions monitoring system (CEMS), and stack.

2.5.3 Combustion Turbine Generators, HRSGs, and Steam Turbine Generator

This section describes the major components and systems of the project: the CTGs, HRSGs, STG, and air-cooled heat exchangers. A list of major mechanical equipment for each power block is provided in Table 2.5-2.

2.5.3.1 Siemens Flex Plant 10 Equipment

Combustion Turbine Generators

Thermal energy will be produced in both of the CTGs through the combustion of natural gas, and be converted into mechanical energy in the CTG turbine that drives the CTG compressor and electric generator. The CTGs are Siemens Model SGT6-5000F (Siemens 5000F) machines and will be supplied by Siemens Power Generation, Inc. The SGT6-5000F CTG is a two-bearing axial exhaust, cold-end-drive design. An air filtration and silencing system is provided for air drawn into the compressor inlet.

Each CTG will consist of a heavy-duty, single-shaft CTG and associated auxiliary equipment. The CTGs will be equipped with ultra low NO_X natural-gas combustors designed to meet the following functional requirements:

- Air emissions at the gas turbine exhaust will not exceed the levels described in Section 7.1, Air Quality.
- Noise emissions will not exceed the near-field and property line levels described in Section 7.5, Noise.
- Each CTG will be capable of operating at a 60 percent or greater load while meeting the required air emission performance.

The CTGs will be equipped with the following accessories required to provide efficient, safe, and reliable operation:

- Inlet air filters and on-line filter cleaning system
- Inlet air evaporative coolers
- On-line and off-line compressor wash system
- Metal acoustical enclosures
- Fire detection and protection system
- Lubrication oil system, including oil coolers and filters
- Generator coolers
- Starting system, auxiliary power system, and control system.

Siemens generators are high-efficiency 3,600 rpm single end drive units designed to meet industry standards for design and instrumentation. The generators produce electricity at 16.5 kV and are open air cooled with a static excitation system. Space heaters are provided in the generator and excitation enclosures to inhibit moisture condensation during installation and periods of shutdown.

The metal acoustical enclosures contain the CTGs and accessory equipment which will be located outdoors.

Heat Recovery Steam Generators

The HRSGs will transfer heat from the CTG exhaust gases to the feedwater to produce steam. Each HRSG is a single-pressure design with extended fin-tube construction. The design enables the CTG to come up to load rapidly. The design also reduces the time for the STG to start up compared to a conventional HRSG.

The HRSG scope includes a submerged-tube heat exchanger, which is used to cool the CTG rotor cooling air, improving cycle efficiency by producing additional steam from this heat that would otherwise be lost to the atmosphere.

The HRSGs will be equipped with transition ducts and 21-foot, 4-inch-diameter exhaust stacks approximately 150 feet, 6 inches tall. Pressure components of each HRSG include an economizer, evaporator, superheater, and boiler drum.

Superheated steam is produced in the HRSG and flows to the steam turbine throttle inlet. Steam that is exhausted from the STG is condensed in an ACHE. The condensate is pumped from the ACHE by condensate pumps to a deaerator. Boiler feedwater pumps send the feedwater from the deaerator storage tank through the economizer and into the boiler drum of the HRSG. Steam from the boiler drum is then superheated, thus completing the steam cycle.

Each HRSG is equipped with a SCR system that uses 19 percent aqueous ammonia in conjunction with a catalyst bed to reduce NO_X in the CTG exhaust gases. The catalyst bed is contained in a catalyst chamber located within each HRSG. Ammonia is injected upstream of the catalyst bed. The subsequent catalytic reaction converts NO_X to nitrogen and water, resulting in a reduced concentration of NO_X in the exhaust gases exiting the stack.

An oxidation catalyst located within each HRSG reduces the concentration of carbon monoxide in the exhaust gases exiting the stack. The oxidation catalyst also reduces the concentration of volatile organic compound (VOC) emissions.

Steam Turbine Generators

The STG system will include a Siemens SST-800 back pressure STG; a governor system; a steam admission system; a gland steam system; a lubrication oil system, including oil coolers and filters; and generator coolers. Steam from the HRSG will enter the STG, where it expands and drives the STG. Upon exiting the turbine, the steam will enter the ACHE, where it will be condensed to water.

The SST-800 back pressure STG is a single-case design with a high-efficiency blade path. It transmits torque to its generator at synchronous speed. The design is suitable for base load or cycling operation. The SST-800 is a center-admission unit using demonstrated reverse-flow technology to offset axial thrust. The rotor is machined from a single forging.

Siemens steam turbine generators are high-efficiency 3,600 rpm single end drive units designed to meet industry standards for design and instrumentation. The steam turbine generators produce electricity at 13.8 kV and are open air cooled (OAC) with a brushless excitation system. Space heaters are provided in the generator and excitation enclosures to inhibit moisture condensation during installation and periods of shutdown.

Steam Turbine Air-Cooled Heat Exchangers

The heat rejection system of the steam cycle for each STG will consist of an ACHE. The ACHE receives exhaust steam from the STG and condenses it to liquid, for return to the HRSG. The ACHE will be a multicell tubular heat exchanger with wet, saturated steam condensing on the tube side and air flowing across the outside of the tubes to provide cooling. The ACHE is more compact than a conventional air-cooled condenser because its normal operating pressure is above atmospheric pressure. The ACHE is designed to allow 100 percent steam bypass of the steam turbine when required. The STG exhaust steam will enter the ACHE through a main duct and will be distributed among multiple cells. Each cell will have a mechanical draft fan that forces air across finned tubes containing the steam. The air condenses the steam, and the condensate flows down to a collection hot well where makeup water is also added. Condensate pumps send the condensate from the hot well to the deaerator, where oxygen and non-condensable gases are removed.

All auxiliary systems will be air cooled.

Steam Bypass System Valve

The FP10 units are designed with 100 percent steam bypass systems for enhanced plant operating flexibility. The steam bypass valve includes a multi-stage, multiple-orifice trim design for application and operation over a wide turndown range. An integral de-superheater is designed into the valve to reduce the exit temperature to meet downstream system requirements.

Feedwater Pumps

The boiler feedwater pumps supply water to the HRSGs. The pumps are of a centrifugal, horizontal, electrically driven design.

Feedwater Control Valves

The feedwater control valves are specified and sized for the application to meet steady-state and transient operating requirements. This valve has multi-stage anti-cavitation trim and a wide turndown capability.

Condensate Pumps

The condensate pumps are a vertical wet-pit–type design coupled with vertical constant-speed electric motors.

2.5.3.2 Simple-Cycle Equipment

Combustion Turbine Generators

Thermal energy is produced in both of the CTGs through the combustion of natural gas, and is converted into mechanical energy in the CTG turbine that drives the CTG compressor and electric generator. The CTGs are Model SGT6-5000F machines, and will be supplied by Siemens Power Generation, Inc. The SGT6-5000F CTG is a two-bearing axial exhaust, cold-end-drive design. An air filtration and silencing system is provided for air drawn into the compressor inlet.

Each CTG will consist of a heavy-duty, single-shaft combustion turbine generator and associated auxiliary equipment. The CTGs will be equipped with ultra low NO_X natural-gas combustors designed to meet the following functional requirements:

- Air emissions at the gas turbine exhaust will not exceed the levels described in Section 7.1, Air Quality.

- Noise emissions will not exceed the near-field and property-line levels described in Section 7.5, Noise.

- Each CTG will be capable of operation across the broad range of 60 to 100 percent load while meeting required air emission performance.

The CTGs will be equipped with the following accessories required to provide efficient, safe, and reliable operation:

- Inlet air filters and on-line filter cleaning system
- Inlet air evaporative coolers
- On-line and off-line compressor-wash system
- Metal acoustical enclosures
- Fire detection and protection system
- Lubrication oil system, including oil coolers and filters
- Generator coolers
- Starting system, auxiliary power system, and control system.

The metal acoustical enclosures that contain the CTGs and accessory equipment will be located outdoors.

Siemens CTG generators are high-efficiency 3,600 revolutions per minute (rpm) single-end-drive units designed to meet industry standards for design and instrumentation. CTG generators are OAC, and are provided with a static excitation system. Space heaters are provided in the generator and excitation enclosures to inhibit moisture condensation during installation and periods of shutdown.

Cooling Systems for Heat Rejection

All auxiliary systems will be air-cooled.

2.5.3.3 Project Noise Control Features

As part of the facilities design, specific noise control equipment will be incorporated that includes:

- CTG inlet air silencers (85 dBA at 3 meters)
- CTG enclosures
- CTG accessory compartment enclosures
- Gas compressors sound attenuation, as required.

The incorporation of these noise control devices has been included in the formulation of equipment noise generation values used in the noise analysis (see Section 7.5).

2.5.4 Major Electrical Systems and Equipment

This section describes the major electrical systems and equipment for the project. Single-line electrical diagrams of the major and auxiliary plant electrical systems are presented on Figures 2.5-7(a-e).

The bulk of the electric power produced by the facility will be transmitted to the grid. A small amount of electric power will be used on site to power auxiliaries such as pumps and fans, control systems, and general facility loads including lighting, heating, and air conditioning. Some power will also be converted from alternating current (AC) to direct current (DC), which will be used as backup power for

control systems and other uses. Transmission and auxiliary uses are discussed in the following subsections.

2.5.4.1 AC Power Transmission

Power will be generated by the four CTGs and two STGs. The CTGs will generate power at 16.5 kilovolts (kV). The STGs will generate power at 13.8 kV. Each of the generators will then be stepped up by a dedicated generator step-up (GSU) transformer to 230-kV for transmission to the grid. The step-up transformers will be filled with oil. Surge arresters will be provided at the high-voltage bushings to protect the transformers from surges on the 230-kV system caused by lightning strikes or other system disturbances. The transformers will be set on concrete pads within containments designed to contain the transformer oil in the event of a leak or spill. For fire protection, a concrete wall will be constructed. All CTGs will have sulfur hexafluoride (SF_6) generator breakers on the low-voltage side of the GSU transformers. All STGs will have 230-kV SF_6 breakers on the high-voltage side of the associated GSU. The breakers for the combustion turbines will be connected to the CTGs and GSUs by iso-phase bus duct. The high-voltage side of the step-up transformers on each FP 10 power block will be connected to one 230-kV transmission line. The high-voltage side of the step-up transformers of the two Simple Cycle units will be connected to one 230-kV transmission line. The transmission lines will connect to SF_6 breakers located in the 230-kV switchyard. The PG&E switchyard will be the point of interconnection with the transmission system.

2.5.4.2 DC Power Supply System

One 125-volt DC power supply system will be supplied per power block for balance-of-plant and STG equipment. It will consist of one-100 percent capacity battery bank, two-100 percent static battery chargers, a switchboard, and two or more distribution panels. Each combined-cycle gas-turbine generator will be provided with its own separate battery systems and redundant chargers. The two simple-cycle gas turbines will have dedicated battery systems with redundant chargers.

Under normal operating conditions, the battery chargers supply DC power to the DC loads. The battery chargers receive 480-volt, three-phase AC power from the AC power supply system, and continuously charge the battery banks while supplying power to the DC loads.

Under abnormal or emergency conditions, when power from the AC power supply system is unavailable, the batteries supply DC power to the DC system loads. Recharging of a discharged battery occurs whenever 480-volt power becomes available from the AC power supply system. The rate of charge depends on the characteristics of the battery, battery charger, and the connected DC load during charging. The anticipated maximum recharge time will be 12 hours.

The 125-volt DC system will also be used to provide control power to the 230-kV generator breakers, 4,160-volt switchgear, 480-volt load centers, critical control circuits, and emergency DC motors.

2.5.4.3 Electrical System for Plant Auxiliaries

Auxiliary power to the CTG and STG power blocks will be supplied at 4,160-volts AC by a double-ended 4,160-volt switchgear lineup. Oil-filled, unit auxiliary step-down transformers will supply primary power to the 4,160-volt switchgear. The high-voltage side of the unit auxiliary transformers will be connected to the outputs of the gas-turbine generators. This connection will allow the switchgear to be powered from the gas-turbine generators in the associated power block or by back-feeding power from the 230-kV switchyard through the unit auxiliary transformer. Generator circuit breakers will be provided for all the gas-turbine generators. These circuit breakers are used to isolate and synchronize the generators, and will be located between the generators and the connections to the auxiliary and GSU transformers. The 4,160-volt switchgear lineup supplies power to the various

4,160-volt motors, to the gas-turbine starting system, and to the load center (LC) transformers, rated 4,160 to 480-volts, for 480-volt power distribution. The switchgear will have vacuum interrupter circuit breakers for the main incoming feeds and for power distribution. All 4,160-volt switchgear will be arc-flash resistant.

The LC transformers will be oil-filled, each supplying 480-volt, three-phase power to the double-ended load centers.

The load centers will provide power through feeder breakers to the various 480-volt motor control centers (MCCs). The MCCs will distribute power to 480-volt motors, to 480-volt power distribution panels, and lower voltage lighting and distribution panel transformers. Power for the AC power supply (120-volt/208-volt) system will be provided by the 480-volt MCCs and 480-volt power panels. 480-120/208-volt dry-type transformers will provide transformation of 480-volt power to 120/208-volt power.

2.5.4.4 Uninterruptible Power Supply System

The combustion turbine and steam turbine power blocks will also have an essential service 120-volt AC, single-phase, 60-hertz (Hz) uninterruptible power supply (UPS) to supply AC power to essential instrumentation, to critical equipment loads, and to unit protection and safety systems that require uninterruptible AC power.

Redundant UPS inverters will supply 120-volt AC single-phase power to the UPS panel boards that supply critical AC loads. The UPS inverters will be fed from the station 125-volt DC power supply system. Each UPS system will consist of one full-capacity inverter, a static transfer switch, a manual bypass switch, an alternate source transformer, and two or more panel boards.

The normal source of power to the system will be from the 125-volt DC power supply system through the inverter to the panel board. A solid-state static transfer switch will continuously monitor both the inverter output and the alternate AC source. The transfer switch will automatically transfer essential AC loads without interruption from the inverter output to the alternate source upon loss of the inverter output.

A manual bypass switch will also be included to enable isolation of the inverter for testing and maintenance without interruption to the essential service AC loads.

Distributed control system (DCS) operator stations will be supplied from the UPS. Continuous emission monitoring (CEM) equipment, DCS controllers, and input/output (I/O) modules will be fed using either UPS or 125-volt DC power directly.

2.5.5 Fuel Gas Supply and Consumption Use

Natural gas will be delivered to the MLGS by PG&E via a new 12-inch-diameter gas line connection from interstate transmission Line 400, which runs along the eastern boundary of the GGS site. The new gas line will continue generally westward to the new MLGS gas metering and gas compression station on the MLGS site.

The natural gas pressure will be increased by gas compressors to a pressure of approximately 600 pounds per square inch gauge (psig), filtered, and pressure-regulated before entering the CTG. Safety pressure relief valves will be provided to protect the natural gas system components from overpressurization. Two natural-gas–fired fuel preheaters will be located upstream of the gas compressor enclosure. The maximum heat input for each preheater is 5 mmBtu/hr.

Chapter 5, Natural Gas Supply, provides more detail on the connection, routing, processing, and quality of natural gas to be used for the MLGS.

2.5.6 Water Supply and Treatment

This section provides estimated consumptive use of water and describes its source, quality, and water treatment systems for the MLGS. The power plant's various water uses will include makeup for the HRSGs, water for the CTG inlet air evaporative coolers, service water system users and, potable water. Water balance diagrams for the MLGS for winter, average, and maximum conditions are presented on Figure 2.5-8.

2.5.6.1 Water Source and Quality

The MLGS will use recycled water from the DDSD BLS for raw water makeup. DDSD's BLS currently pumps untreated wastewater to DDSD's central sewage treatment plant. As part of this project, a small (1,000-gpm) membrane-based treatment facility will be constructed at the BLS to upgrade untreated wastewater to reverse-osmosis feedwater quality. The resulting treated water will be conveyed to the MLGS site via a new 10-inch-diameter water supply pipeline from the BLS to the MLGS site. A representative water analysis of the recycled water supply (i.e., treated effluent from BLS) is summarized in Table 2.5-3.

In order to sustain one day of water usage under peak operating conditions in the event of a water supply interruption, a 1.8-million-gallon raw-water storage tank will be provided on the MLGS site. The water will be conveyed to the site using two 50 percent centrifugal pumps nominally sized for 500 gpm each.

Chapter 6, Water Supply, includes a more extensive discussion of the project's water supply, treatment at BLS, and conveyance.

2.5.6.2 Water Treatment Requirements

Water treatment requirements for the project will vary depending on the specific use of the water. The following describes the main water treatment requirements:

- The recycled water received from DDSD will be processed through reverse-osmosis membranes to remove objectionable constituents. Feedwater will be produced for the HRSGs by further processing of permeate using onsite electrodeionization (EDI). A portion of the raw water will be treated with corrosion inhibitor and used as makeup to the service water system.

- Demineralized water will be produced on site by a membrane-based production facility that includes first and second pass Reverse Osmosis (RO) and EDI membranes. The following plant demineralized water uses are anticipated:

  – The combustion turbine air inlet evaporative coolers require blending first pass RO permeate water and raw water (from the Raw Water Storage Tank) to meet equipment manufacturer requirements. This prevents aspiration of compounds that could foul or damage the combustion turbines and extends the life of the packing material used inside the evaporative coolers without adding chemicals.

  – Demineralized water will be needed for power augmentation. The demineralized water will be used to produce supplemental steam in the HRSG for injection directly into the combustion turbines of the FP10 units during power augmentation operation.

  – Demineralized water will be needed for boiler feedwater makeup to maintain a constant quality and quantity of water within the system.

– Demineralized water will also be used for miscellaneous plant uses, such as periodic combustion-turbine-compressor washes, makeup of various chemical feed, and cleaning solutions.

Note: Both FP10 and the Simple Cycle combustion turbines will use ultra low NO_X burners; therefore, NO_x injection water will not be necessary.

- Demineralized product water will be stored in a 1.0-million-gallon demineralized water storage tank, which provides sufficient capacity for approximately one day of peak load operation coinciding with an outage of the water treatment system.

2.5.6.3 Consumptive Water Requirements

Daily and annual water consumptive requirements of the MLGS, which includes the Siemens FP10 units and Siemens 5000F units, are summarized in Table 2.5-4. Average daily water requirements depend on the ambient temperature, capacity factor, and operating profile. The capacity factors for the FP10 and 5000F units were assumed to be 40 to 50 percent and 10 percent, respectively.

Maximum daily requirements are based on water consumption at maximum operating conditions of 94ºF and 30 percent relative humidity (i.e., a hot summer day). For the Siemens FP10 units, daily average conditions reflect operation of both evaporative cooling and power augmentation. Maximum daily requirements are based on evaporative cooling and power augmentation in operation, but at a hotter DBT and "lower" relative humidity. For the Simple Cycle units, average and maximum consumption assume that evaporative coolers are in operation.

The annual water consumption value is the estimated total amount of water that will be used by the facility, in acre-feet. The Simple Cycle units are expected to operate less than 10 percent of the time, during peak power demand periods. The annual water use for the FP10 units assumes that the units will operate approximately 50 percent of the time during the year whenever the DBT is greater than 59ºF. Therefore, total estimated annual water use at the MLGS is expected to be approximately 736 acre-feet per year (AFY).

Figure 2.5-8 provides the estimated daily continuous water flow rates in gallons per minute corresponding to the heat and material balance case descriptions presented in Figures 2.5-5 and 2.5-6. The major consumptive uses of water at the site are power augmentation and evaporative cooling.

The water balance diagram (Figure 2.5-8) shows the MLGS's water treatment processes and the distribution of treated water. Water treatment will vary according to the quality required for each of the plant's water uses: CTG inlet air evaporative coolers, HRSG makeup water, and closed cooling water system fill water. The following sections describe the MLGS's water uses.

Siemens Flex Plant 10 Units

CTG Evaporative Coolers

Makeup water for the CTG evaporative coolers will be a blend of first stage RO permeate and raw water. Water evaporates in the CTG evaporative coolers and passes through the CTG. Because evaporation will concentrate minerals in the remaining water that is not evaporated, a quantity of water will be removed continuously as blowdown to prevent minerals from concentrating to levels above the CTG design limits. The blowdown will maintain the water in the evaporative cooler sump at approximately 2 cycles of concentration. The blowdown will be discharged to the plant's wastewater storage tank for discharge to the DDSD system. As required, water will be added to the evaporative cooler to replace the water that is lost to evaporation and blowdown.

HRSG Makeup

Water for the HRSGs must meet stringent specifications for suspended and dissolved solids. To meet these specifications, demineralized water will be used for HRSG makeup water.

Additional conditioning of the condensate and feedwater circulating in the steam cycle will be provided by means of a chemical feed system. To minimize corrosion, an amine will be injected into the condensate system downstream of the condensate pumps and directly upstream of the HRSG economizers. Additionally, a caustic solution will be fed into the steam drums of the HRSG. The chemical feed system includes one caustic container for each HRSG. Amine will be supplied from the plant's 20,000-gallon ammonia tank that also is used to supply ammonia to the HRSG SCRs used for NO_X emission control. Two full-capacity metering pumps will be provided for each chemical. A steam-cycle sampling and analysis system will monitor the water quality at various points in the plant's steam cycle. The resulting water quality data are used to guide adjustments in the water treatment processes and to determine the need for other corrective operational or maintenance measures. Steam and water samples will be routed to sample panels, where steam samples are condensed, and the pressure and temperature of all samples are reduced as necessary. The samples are then directed to automatic analyzers for continuous monitoring of conductivity and pH. All monitored values are indicated at the sample panels, and critical values are transmitted to the plant control room. Grab samples will be obtained periodically at the sample panel for chemical analyses that provide information on a range of water quality parameters.

Power Augmentation Makeup

Power augmentation is the practice of adding steam downstream of the combustion chamber of the gas turbine to boost power output. The steam is taken from the HRSG and is therefore subject to the usual water treatment required for HRSG use. The steam that is injected is ultimately discharged to the atmosphere by way of the combustion turbine exhaust.

Service Water

Utility or hose stations at various locations around the FP10 units will provide service water to wash down tools, equipment, and areas adjacent to the utility station.

Simple Cycle Units

CTG Evaporative Coolers

Makeup water for the CTG evaporative coolers will be a blend of first stage RO permeate and raw water. Water evaporates in the CTG evaporative coolers and passes through the CTG. Because evaporation will concentrate minerals in the circulating water that is not evaporated, a quantity of water will be removed continuously as blowdown to prevent minerals from concentrating to levels above the CTG design limits. The blowdown will maintain the water in the evaporative cooler sump at approximately two cycles of concentration. The blowdown will be discharged to the plant wastewater storage tank for discharge to the DDSD system. As required, water will be added to the evaporative cooler to replace the water that is lost to evaporation and blowdown.

Service Water

Utility or hose stations at various locations within the simple-cycle power block will provide service water to wash down tools, equipment, and areas adjacent to the utility station.

2.5.6.4 Potable Water

The facility will require potable water for personnel consumption, eyewash stations, showers, and sanitary needs. Potable water will tie into an existing potable water line on the CCPP property, and no onsite treatment is required.

2.5.7 Waste Management

This section describes the waste management processes leading to proper collection, treatment, and disposal of wastes. Wastes include process wastewater, solid nonhazardous waste, and hazardous waste. Additional information on waste management is provided in Section 7.13, Waste Management.

2.5.7.1 Wastewater

The water balance diagram (Figure 2.5-8) shows the expected wastewater streams and flow rates for the various plant processes. The flow rates shown are based on daily average, annual average, and peak conditions. Plant process wastewater streams will be collected in the plant wastewater storage tank. From the tank, the wastewater will be pumped and conveyed via the new 10-inch-diameter wastewater discharge pipeline to DDSD's wastewater system at BLS under a new Industrial User's permit. The estimated composition of the MLGS wastewater stream is shown in Table 2.5-5.

Table 7.12-4 in the Hazardous Materials Handling section lists the chemicals to be used for water and wastewater treatment. The system is designed for continuous monitoring of control parameters and specified quantities for optimum operations.

The plant's wastewater streams and treatments are described below.

Water Treatment System

Reject from the first pass reverse-osmosis unit will be discharged directly to the 720,000-gallon wastewater storage tank (WWST) after combining with clear oil-water separator (OWS) effluent and non-oily drains. Other flows into the WWST are evaporative cooler blowdown and quenched HRSG blowdown. Reject from the second pass RO and EDI units will be recycled within the plant, and consequently will not generate wastewater.

Siemens Flex Plant 10 Units

Evaporative Cooler Blowdown

The blowdown stream from the CTG evaporative coolers will be sent directly to the plant process wastewater tank without treatment.

HRSG Blowdown

Water circulating in the plant's steam cycle will accumulate dissolved solids, which must be maintained below given limits to prevent deposition in the HRSG and on the steam turbine blades. The concentration of dissolved solids is maintained below such limits by withdrawing a portion of the water from the HRSG steam drums (i.e., HRSG blowdown) and replacing it with product water from the demineralization process described previously in Section 2.5.6.3. HRSG flashed blowdown is cooled by mixing with service water and routing directly to the plant wastewater tank without treatment.

Chemical Feed Area Drainage

The chemical feed area will be provided with a containment area to keep any spilled chemicals out of the plant drainage system.

Oil-Water Separator System

An OWS system will be installed on site to collect wastewater from equipment washdowns and leakage, sample drains, and miscellaneous plant drains. Water from areas that may accumulate small amounts of oil and miscible chemicals will be collected in a system of floor drains, equipment drains, curbed area drains, sumps, and piping, and routed through the OWS. After passing through the OWS, water from the clear effluent chambers will be discharged to the wastewater tank, and ultimately routed to the DDSD's wastewater system.

Simple Cycle Units

Evaporative Cooler Blowdown

The blowdown stream from the CTG evaporative coolers will be sent directly to the plant process wastewater storage tank without treatment.

Oil-Water Separator System

An OWS system will be installed to the west of the new units to collect wastewater from equipment washdowns and leakage, sample drains, and miscellaneous plant drains. Water from areas that may accumulate small amounts of oil and miscible chemicals will be collected in a system of floor drains, equipment drains, curbed area drains, sumps, and piping, and routed through the OWS. After passing through the OWS, water from the clear effluent chambers will be discharged to the wastewater tank, and ultimately routed to the DDSD's wastewater system.

Domestic/Sanitary Wastewater

The domestic waste system will collect discharge from sinks, toilets, and other sanitary facilities and discharge to the plant's sanitary sewer collection system. The sanitary system will include gravity-drainage piping, manholes, and lift stations as required. The system will discharge to DDSD's BLS.

2.5.7.2 Stormwater Runoff

Stormwater runoff from open areas will be discharged to the San Joaquin River via the existing CCPP stormwater Outfall-001 in accordance with the National Pollutant Discharge Elimination System (NPDES) General Industrial Permit requirements. Stormwater runoff from areas that collect miscible chemicals or volatile liquids and from areas that could collect nonmiscible oil will be directed to a new oily water separator system. Oil leakage from equipment is expected to be minimal. Nonetheless, all equipment that has potential for leakage of oil or hazardous chemicals, will be located within spill containment areas. The oil from the oil containment chambers of the OWS will be collected and shipped off site for recycling. After passing through the OWS, water from the clear effluent chambers will be discharged to the wastewater storage tank, and ultimately to the DDSD's wastewater system.

2.5.7.3 Solid Nonhazardous Waste

The construction, operation, and maintenance of the MLGS will generate nonhazardous solid wastes typical of power generation facilities. Potential wastes generated during demolition generally include scrap metal, soil, concrete, and fuel oil residual. Construction wastes generally include soil, scrap wood, excess concrete, empty containers, scrap metal, and insulation. Typical wastes generated during

operation and maintenance include scrap metal and plastic, insulation material, paper, glass, empty containers, and other miscellaneous solid wastes. These materials are collected for recycling or transfer to landfills in accordance with applicable regulatory requirements. A description of the types of wastes likely to be generated and their related quantities is included in Section 7.13, Waste Management, and shown in Tables 2.5-6 and 2.5-7 for construction and operation, respectively.

2.5.7.4 Hazardous Waste

Hazardous wastes will be generated as a result of project construction, operation, and maintenance, as discussed in Section 7.12, Hazardous Materials Handling.

Construction

Demolition will generate hazardous waste, including asbestos-containing material (ACM) from equipment and pipeline insulation associated with the fuel oil storage tanks. The majority of hazardous waste generated during construction will be liquid wastes such as waste oil and other lubricants from machinery operations, solvents used for cleaning and materials preparation, waste paints, and other material coatings. A description of the types and quantities of hazardous wastes that are likely to be generated is given in Section 7.12, Hazardous Materials Handling, and shown in Table 2.5-6.

Operation

The methods used to properly collect and dispose or recycle hazardous waste generated by the plant will depend on the nature of the waste. Hazardous wastes generated by the MLGS will include spent SCR and oxidation catalyst, used oil filters, used oil, and chemical cleaning wastes. Spent SCR and oxidation catalyst will be recycled by the catalyst supplier, if possible. Used oil filters will be drained and disposed of in an offsite disposal facility. Used oil will be recovered and recycled by a waste oil recycling contractor.

Chemical cleaning wastes consist of acid and alkaline cleaning solutions used for pre-operational chemical cleaning of the HRSG pressure parts and steam-cycle piping systems; acid cleaning solutions used for periodic chemical cleaning of the HRSGs; and wash water used in periodic cleaning of the HRSG, CTG, and STG. These wastes, which may have elevated concentrations of metals, will be tested. These and all other hazardous solid and liquid wastes will be disposed of in accordance with applicable LORS.

Workers will be trained to handle waste generated at the site, as described in Section 7.7, Worker Safety and Health.

2.5.8 Hazardous Material Management

2.5.8.1 Construction

Hazardous materials used during construction of the project will be located in a central location at the southwestern corner of the 7.6-acre laydown area just east of the MLGS (see Figure 2.7-3). An area at the southern end of the area designated for construction office facilities will be provided for construction equipment fueling, maintenance, and parking. Appropriate measures will be provided, including approved dual-wall fuel tanks, fueling equipment, containment, supply of absorbent material, and disposal containers for waste lubricants. Temporary containments will be sized to hold the appropriate volumes. The Emergency Action Plan developed for the project will include a section that addresses accidental releases of hazardous materials. A hazardous material emergency response team will be assigned and trained to manage a hazardous material release. Stored hazardous materials will be inspected daily for

leaks and container failure. These inspections are part of the safety manager's daily routine and are integrated parts of the Safe Behavior Observation and pre-Task Planning processes.

2.5.8.2 Operation

A variety of hazardous reagents and materials would be stored and used at MLGS in conjunction with operation and maintenance of the project, as described in Table 7.12-3. In general, the type and character of these materials will be the same as for comparable, current operations at CCPP's Units 6 and 7. Hazardous materials that may be routinely stored in bulk and used in conjunction with the project include, but are not limited to, petroleum products, flammable and/or compressed gases, acids and caustics, aqueous ammonia, water treatment and cleaning chemicals, paints, and some solvents.

Curbs, berms, and concrete pits will be used where accidental release of hazardous chemicals may occur. All containment areas will be constructed in accordance with the applicable LORS. Containment areas will be drained to appropriate collection sumps or neutralization tanks for recycling or offsite disposal. Piping and tanks exposed to potential traffic hazards will be protected by traffic barriers.

The storage, handling, and use of hazardous materials will be in accordance with applicable LORS. The MLGS will use an existing hazardous materials storage and handling facility located on the CCPP site during operation, as shown on Figure 2.5-1a. All materials will be segregated and regulated independently. Bulk tanks will be provided with secondary containment to contain leaks or spills. Safety showers and eyewashes will be provided in appropriate chemical storage and use areas. Personnel with potential to handle hazardous materials will be properly trained to perform their duties safely and to respond to emergency situations that may occur in the event of an accidental spill or release.

The aqueous ammonia storage tanks for the SCR systems will be provided with containment structures and other safety features, as described in Section 2.6.9, Ammonia Storage Facility.

Safety showers and eyewashes will be provided in the chemical feed areas. Service water hose connections will be provided near the chemical feed areas to facilitate flushing of leaks and spills of materials that are not reactive in water to the chemical feed area drains. Appropriate safety gear will be provided for plant personnel for use during the handling, use, and cleanup of hazardous materials. Plant personnel will be properly trained in the handling, use, and cleanup of hazardous materials used at the plant, and procedures to be followed in the event of a leak or spill. Adequate supplies of appropriate cleanup materials will be stored on site.

All electrical equipment will be specified to be free of polychlorinated biphenyls (PCBs). A list of the hazardous materials anticipated to be used at the plant is provided in Table 7.12-4. Each material is identified by type, intended use, and estimated quantity to be stored on site. Additional information on hazardous materials management is provided in Section 7.12, Hazardous Materials Handling.

2.5.9 Air Emissions Control and Monitoring

Air emissions from the combustion of natural gas in the CTGs will be controlled by state-of-the-art systems. Controlled emissions will include NO_X, CO, VOCs, fine particulate matter (PM_{10}), and sulfur dioxide (SO_2). Continuous emissions monitoring system will be installed to monitor the stack emissions. All emissions values stated in the following subsections are based on parts per million by volume, dry basis (ppmvd) corrected to 15 percent oxygen (O_2). Complete information on air quality matters, including startup emissions, is provided in Section 7.1, Air Quality.

2.5.9.1 NO_X Emissions Control

Ultra low NO_X combustors in the CTGs, followed by SCR in the FP10 HRSGs and at the Simple-Cycle CTG flue gas outlets, will control stack emissions of NO_X to a maximum 2.5 parts per million by volume, dry (ppmvd) (corrected to 15 percent O_2, 1-hour average excluding startups) for the Simple Cycle units, and 2.0 ppmvd for the FP10 units. The ultra low NO_X combustors control NO_X emissions to approximately 9.0 ppmvd at the CTG exhausts by pre-mixing fuel and air immediately before combustion. Pre-mixing inhibits NO_X formation by minimizing the flame temperature and the concentration of oxygen at the flame front.

The SCR process will use aqueous ammonia (NH_3) as a reagent. Stack emissions of ammonia, referred to as "ammonia slip," will not exceed 5 ppmvd for FP10 units and 10 ppm for Simple Cycle units. The SCR system includes a catalyst chamber located within each FP10 HRSG, and at the Simple Cycle CTG flue gas outlet, catalyst bed, ammonia storage system, ammonia vaporization system, and ammonia injection system. The catalyst chamber contains the catalyst bed and is located in a temperature zone of the FP10 HRSG where the catalyst is most effective over the range of loads at which the plant will operate. Dilution air fans will be used for the simple-cycle CTG SCR system to reduce the flue gas temperature to the effective catalyst operating temperature. The ammonia injection grid is located upstream of the catalyst chamber. It is expected that the 20,000-gallon aqueous ammonia storage tank will have a 10-day storage capacity.

2.5.9.2 CO and VOC Emissions Control

An oxidation catalyst will be provided in the FP10 HRSG and at the Simple Cycle CTG flue gas outlets to limit CO emissions to less than 3 ppmvd, and VOC emissions to less than 2 ppmvd (corrected to 15 percent O_2). These emission levels correspond to current California best available control technology (BACT). This catalytic system will promote the oxidation of CO to carbon dioxide, and VOC to carbon dioxide and water vapor, without the need for additional reagents.

2.5.9.3 PM_{10} and SO_2 Emissions Control

PM_{10} emissions consist primarily of hydrocarbon particles formed during combustion. PM_{10} emissions will be controlled by inlet air filtration and by the use of natural gas fuel, which contains essentially zero particulate matter.

SO_2 emissions will be controlled by the use of pipeline-quality natural gas, which contains only trace quantities of sulfur from the injected mercaptan odorant.

2.5.9.4 Continuous Emissions Monitoring

The continuous emissions monitoring system (CEMS) uses dilution and/or direct extractive sampling techniques for in-stack or in-duct monitoring. For each CTG, a separate CEMS will sample, analyze, and record fuel gas flow rate, NO_x and CO concentration levels, and percentage of O_2 in the exhaust gas from the stacks. The CEMS systems will transmit data to a data acquisition system (DAS) that will store the data and generate emission reports in accordance with permit requirements. The DAS will also include alarm features that will send signals to the plant DCS when the emissions approach or exceed pre-selected limits.

2.5.10 Fire Protection

The plant fire protection system will be designed to protect personnel and limit property loss and plant downtime in the event of a fire. The system will include a fire protection water system, CO_2 fire suppression systems for the CTGs, and portable fire extinguishers. The primary source of fire protection

water will be the existing CCPP plant fire protection system, which uses water from the San Joaquin River. New fire loops will be designed to protect the MLGS, as shown in Figure 2.5-10. The system is designed in accordance with:

- Federal, state, and local fire codes, occupational health and safety regulations, and other jurisdictional requirements
- California Building Code (CBC)
- National Fire Protection Association (NFPA) standard practices.

The fire water supply and pumping system provides an adequate quantity of fire-fighting water to yard hydrants, hose stations, and water spray and sprinkler systems. The system is capable of supplying maximum water demand for any automatic sprinkler system, plus water for fire hydrants and hose stations. Hydraulic calculations will be performed to demonstrate that the fire protection loop has sufficient capacity to provide all the required fire-fighting water for the new power plant. A plant firewater loop, designed and installed in accordance with NFPA 24, is provided to reach all parts of the facility. The existing CCPP fire pumps will discharge to the new dedicated extension of the existing underground firewater loop piping system. Both the fire hydrants and the fixed suppression systems will be supplied from the firewater loop. The firewater system has sectionalizing valves to allow a failure in any part of the system to be isolated, so that the remainder of the system can continue to function properly.

Fixed fire suppression systems will be installed at determined fire risk areas such as the transformers and turbine lube oil equipment. Sprinkler systems or FM-200 waterless fire protection systems will also be installed in the administration and control building as required by NFPA 24 and local code requirements. Hydrants and hose houses will be placed at appropriate spacing around the plant in accordance with NFPA 24 and local fire codes. Handheld fire extinguishers of the appropriate size and rating will be located in accordance with NFPA 10 throughout the facilities. Firewater monitors will be placed where they can reach equipment that may need cooling during a fire. Valves requiring periodic testing will be made accessible.

Local building fire pull boxes and audible alarms will be provided. Flashing lights are used in addition to audible alarms in high noise areas.

The CO_2 fire-suppression system provided for each CTG will include a CO_2 storage tank, CO_2 piping and nozzles, fire detection sensors, and a control system. The control system will automatically shut down the affected CTG turbines, turn off ventilation, close ventilation openings, and release CO_2 upon detection of a fire. The CO_2 fire-suppression systems will cover the turbine enclosure and accessory equipment enclosure of each CTG.

Portable CO_2 and dry chemical extinguishers are located throughout the power plant site, including switchgear rooms, with size, rating, and spacing in accordance with NFPA 10. Handcart CO_2 extinguishers are provided for the turbine area as needed for specific hazards. Table 2.5-8 lists fire protection system design conditions.

2.5.11 Plant Auxiliary and Safety Systems

The plant auxiliary systems described below will support, protect, and control the power plant.

2.5.11.1 Lighting System

The plant lighting system provides personnel with illumination for plant operation under normal conditions, means of egress under emergency conditions, emergency lighting to perform manual operations during a power outage of the normal power source, and construction lighting in areas where

early installation is feasible. The lighting system will be designed in accordance with Illuminating Engineering Society of North America (IESNA) and calculated average illumination levels with 0.8 maintenance factor, as shown on the Table 2.5-9. Components of the lighting plan will include:

- Photo cells will control all outdoor lighting.
- Frequently switched indoor lighting (such as office and maintenance areas) will be controlled by wall-mounted lighting switches. Infrequently switched indoor lighting (such as the equipment buildings) will be controlled by panel board circuit breakers
- Self-contained battery-backed emergency lighting and exit signs will be furnished to provide safe personnel egress from buildings during a total loss of plant power. Emergency lighting will be designed to maintain the necessary illumination for a minimum of 90 minutes.
- All 120V outdoor receptacles will be fed from CFCI-type receptacles. All 120V receptacles will be located so equipment at grade can be reached with a 75-foot extension cord.
- Fixtures will be placed to offer maximum illumination of operating work areas in compliance with Occupational Safety and Health Administration (OSHA) safety standards, and will include shielding to minimize offsite illumination.

2.5.11.2 Grounding System

The electrical system is susceptible to ground faults, lightning, and switching surges that result in high voltage, which constitutes a hazard to site personnel and electrical equipment. The station grounding system provides an adequate path to permit the dissipation of current to ground created by these events. The station grounding grid will be designed for adequate capacity to dissipate the ground fault current from the ground grid under the most severe conditions in areas of high ground fault current concentration. The grid spacing will maintain safe voltage gradients. Bare conductors will be installed below-grade in a grid pattern. Each junction of the grid will be bonded together by an exothermic weld. Ground resistivity readings will be used to determine the necessary numbers of ground rods and grid spacing to ensure safe step and touch potentials under severe fault conditions. Grounding conductors will be brought from the ground grid to connect to building steel and non-energized metallic parts of electrical equipment.

2.5.11.3 Distributed Control System

The DCS provides modulating control, digital control, monitoring, and indicating functions for the plant power block systems.

The following functions will be provided:

- Controlling the STGs, CTGs, HRSGs, and other systems in a coordinated manner
- Controlling the balance-of-plant systems in response to plant demands
- Monitoring controlled plant equipment and process parameters and delivery of this information to plant operators
- Providing control displays (printed logs, LCD video monitors) for signals generated within the system or received from I/O
- Providing consolidated plant process status information through displays presented in a timely and meaningful manner
- Providing alarms for out-of-limit parameters or parameter trends, displaying on alarm video monitors(s), and recording on an alarm log printer

- Providing storage and retrieval of historical data.

The DCS will be a redundant microprocessor-based system and will consist of the following major components:

- PC-based operator consoles with LCD video monitors
- Engineer work station
- Distributed processing units
- I/O cabinets
- Historical data unit
- Printers
- Network Cabinet
- Data links to the CTG and STG control systems.

The DCS will have a functionally distributed architecture comprising a group of similar redundant processing units linked to a group of operator consoles and the engineer workstation by redundant data highways. Each processor will be programmed to perform specific dedicated tasks for control information, data acquisition, annunciation, and historical purposes. With redundant systems, no single processor failure can cause or prevent a unit trip. The DCS will interface with the control systems furnished by the CTG and STG supplier to provide remote-control capabilities, as well as data acquisition, annunciation, and historical storage of turbine and generator operating information.

The system will be designed with sufficient redundancy to preclude a single device failure from significantly affecting overall plant control and operation. This also will allow critical control and safety systems to have redundancy of controls, as well as a UPS.

As part of the quality control program, daily operator logs will be available for review to determine the status of the operating equipment. The DCS will also transmit selected information to the CAISO remote terminal unit (RTU) for grid and generation control purposes.

2.5.11.4 Cathodic Protection System

The need for cathodic protection for buried metallic piping and tank bottoms will be determined, based on specific site parameters and local codes or requirements. The cathodic protection system will be designed to control the electrochemical corrosion of designated metal piping buried in the soil. Depending upon the corrosion potential and the site soils, either passive or impressed current cathodic protection will be provided.

2.5.11.5 Freeze Protection Systems

Freeze protection for above-grade and below-grade piping and instrumentation lines will be evaluated and installed, as necessary, based on the expected minimum ambient temperature at the plant. For a minimum temperature of 20°F for the Antioch area, freeze protection is not expected to be required for large piping, but may be required for smaller instrumentation air tubing.

2.5.11.6 Service Air System

The service air system will supply compressed air to hose connections located at intervals throughout the power plant. Compressors deliver compressed air at a regulated pressure to the service air piping network.

2.5.11.7 Instrument Air System

The instrument air system will provide dry, filtered air to pneumatic operators and devices throughout the power plant. Air from the service air system is dried, filtered, and pressure-regulated before delivery to the instrument air piping network. The system consists of redundant, electricity-driven air compressors and two dual-tower air dryers, each with pre-filter and after-filter for each CTG. A dry air receiver, instrument air headers, and distribution piping are also provided for each CTG.

The system capacity is based on the total quantity of air users and capacity of each user, plus a margin to account for leakage and plant modifications.

2.6 POWER PLANT CIVIL/STRUCTURAL FEATURES

The following sections describe civil/structural features of the MLGS, as illustrated in the plot plans presented on Figures 2.5-1a-d. Figures 2.6-1 and 2.6-2 illustrate the site's existing topography, existing facilities, site grading and drainage plan, and access roads. Table 2.6-1 lists the major structures of the power plant and gives their dimensions. In addition to the features described in this section, descriptions of the electric transmission interconnection, gas supply pipeline, and water supply pipeline are provided in Chapters 4, 5, and 6—Transmission Facilities, Natural Gas Supply, and Water Supply, respectively.

2.6.1 CTGs, HRSGs, STGs, and Balance-of-Plant Equipment

The CTGs, HRSGs, and STGs will be supported at grade elevation on reinforced concrete mat foundations. The unit auxiliary and the main transformers are also supported at grade elevation on reinforced-concrete foundations. Balance-of-plant mechanical and electrical equipment will be supported at grade elevation on individual reinforced-concrete foundation. It is anticipated that deep foundations (such as driven piling up to a maximum depth of 70 feet) may be required in certain areas. The concrete foundation design will be finalized as required by the final geotechnical report.

2.6.2 Stacks

Each FP10 HRSG and Simple Cycle unit CTG will be provided with a self-supporting steel stack. The FP10 stacks will be approximately 21 feet, 4 inches in inside diameter, and approximately 150 feet, 6 inches tall. The simple-cycle stacks will be approximately 31 feet, 4 inches in diameter, and 150 feet, 3 inches tall. Each stack will include U.S. Environmental Protection Agency (U.S. EPA) sampling ports, ladders, side-step platforms, and electrical grounding. Aviation lighting is not anticipated, but will be provided if required by the Federal Aviation Administration.

2.6.3 Buildings

Plant buildings and enclosures will include the control room/administration building, water treatment building, and gas compressor enclosure. Building columns will be supported on reinforced-concrete foundations or individual spread footings. Ground floors will consist of reinforced-concrete. Approximately 15 parking spaces will be provided on site to accommodate all employee and visitor vehicles, including handicapped parking. The buildings will also be designed to meet handicapped accessibility requirements.

2.6.4 Water Storage Tanks

Major water storage facilities for the MLGS will consist of four tanks:

- Raw Water Storage Tank (RWST) 1,800,000 gallons
- Reverse-Osmosis Permeate Storage Tank (ROPST) 1,000,000 gallons
- Demineralized-Water Storage Tank (DWST) 1,000,000 gallons

- Wastewater Storage Tank (WWST) 750,000 gallons

Service water will be provided from the RWST. Each water storage tank will consist of a vertical, cylindrical field-erected steel tank supported on a suitable foundation consisting of either a reinforced-concrete mat or a reinforced-concrete ring wall with an interior bearing layer of compacted sand supporting the tank bottom.

2.6.5 Roads and Fencing

The power plant site will be accessed by one of the existing CCPP entrances on Wilbur Avenue. Chain-link security fencing is already in place around the existing plant site.

2.6.6 Sanitary Wastewater System

Sanitary wastes will be discharged to the DDSD's existing wastewater system. A new 10-inch-diameter wastewater discharge pipeline will be constructed from the MLGS to DDSD's BLS (see Figure 2.3-1). This pipeline will convey process wastewater and sanitary wastewater.

2.6.7 Site Drainage

The preconstruction site topography is shown on Figure 2.6-1. The grading plan and post-construction drainage is shown on Figure 2.6-2. The drainage flows shown on Figure 2.6-2 are based on the 24-hour, 25-year storm event. The stormwater system will be designed in accordance with the Contra Costa Countywide stormwater requirements. Preliminary calculations to size the system are provided in Appendix F. The existing points of discharge will be maintained. Stormwater will be collected in the plant site from areas not anticipated to have any oil contamination using catch basins and a storm drain system. Stormwater runoff will be discharged to the San Joaquin River through the CCPP's existing stormwater Outfall 001.

2.6.8 Earthwork

Earthwork on the power plant site will consist of excavation and compaction of earth to create the plant grade, and excavation for foundations and underground systems. Materials suitable for compaction will be stored in stockpiles at designated locations using proper erosion prevention methods. Any contaminated materials encountered during excavation will be disposed of in accordance with applicable LORS.

Compaction will be performed in uniform layers of specified thickness. Materials in each layer will be moistened properly to facilitate compaction to the specified density. To verify compaction, representative density and moisture content tests will be performed in the field during compaction. Structural fill material supporting foundations, roads, parking areas, etc., will be compacted. Before fill materials are placed, subgrades will be examined for loose or soft areas and further excavated as necessary.

The estimated volumes of soil that will be handled are as follows, based on the full construction of the four units and the preliminary grading shown on Figure 2.6-2:

- Cut = 80,060 cubic yards
- Fill = 72,050 cubic yards
- Net export = 8,010 cubic yards

The final grading plans that will be prepared during design may result in a different balance of cut and fill volumes. However, for purposes of this AFC, the preliminary design assumes that there may be an excess of soil.

The project intends to reuse or recycle as much of the excess soil as appropriate. The excess soil will be characterized so that clean soils can be reused. Soil that cannot be reused will be transported to an appropriate landfill. Although a specific beneficial reuse of the excess soil has not yet been identified, the Applicant will explore such reuse opportunities at the appropriate time (e.g., California Delta levee maintenance projects).

2.6.9 Ammonia Storage Facility

Operation of the SCR NO_X emission control system will include the use of aqueous ammonia, a solution consisting of water and ammonia that results in 19 percent (by volume) ammonia solution.

This solution will be stored in two Aqueous Ammonia Storage Facilities located on site. The FP10 power blocks will share one facility, and the simple-cycle power blocks will share another facility (see Figures 2.5-1c and 2.5-1d). Each storage tank will be located within a dedicated concrete containment area and have a tanker truck offloading facility located within a containment berm. The general design of the storage and receiving facility is shown on Figure 2.6-3. The capacity of each storage tank is 20,000 gallons.

The locations for the aqueous ammonia unloading and storage facilities have been selected largely on the basis of safety considerations. The locations ensure adequate distance from the property lines, reducing any potential offsite impacts due to a spill, while minimizing the piping distances to the HRSGs and SCRs. In addition, the locations were chosen for their relatively small number of underground utilities and their easy access for delivery trucks. The locations also maintain the aqueous ammonia storage systems at appropriate distances from combustion equipment and plant operations personnel.

As shown on the figure, the horizontally mounted storage tank will be supported on concrete foundations within a walled containment basin. Below the containment basin is a containment sump sized to contain the entire volume of the tank and the rainfall that could collect within the containment over a 24-hour maximum recorded rainfall period (3.4 inches of rainfall recorded within the past 25 years). This design specification assumes a worst-case failure event of complete rupture and drainage of the tank at the end of the worst 24-hour-long rainstorm that has occurred in the site locality within the past 25 years. This design is intended to limit the volatilization of an accidental release of aqueous ammonia, because any spilled solution would rapidly flow into the covered sump, where it would only be exposed to the atmosphere through the two drain holes. Although the sump will be sized to accommodate rainfall in accordance with applicable codes, a sump pump will be provided to keep the sump free of rainwater. The sump pump will be interlocked with the ammonia monitoring system so that it will not operate if ammonia vapors are detected.

The storage tanks will be made of carbon steel and constructed in accordance with the International Building Code (IBC) and American Society of Mechanical Engineers (ASME) Boiler and Pressure Vessel Code Section VIII, Division 1, Rules for Construction of Pressure Vessels. The maximum design pressure and temperature for the tanks will be about 50 psig and 110°F, respectively.

The tanks will have stainless-steel fill- and vapor-recovery lines. A drain hole with an opening will be located beneath the tank to immediately drain any spilled aqueous ammonia into the sump. The drain hole will be covered with metal grating to prevent workers from falling into the sump. The drain hole will immediately restrict the potential surface area of a spill, and will thus minimize evaporation of ammonia into the atmosphere. In the event of a tank failure, ammonia will drain by way of the drain hole into the covered sump. The entire contents of a tank will drain through the opening in less than 1 minute with less than 1 foot of backup, including considerations for the grating. Pumps used to unload and forward the

aqueous ammonia to the units will also be located on skids within the containment basin. Stairs and/or platforms will be provided for access to the tanks.

A tanker truck offloading facility will be adjacent to each storage facility to receive aqueous ammonia deliveries. The offloading facility will include a spill containment to collect any ammonia solution spilled during offloading. Any offloading spills will be contained within the offloading containment. The unloading stations will consist of an ammonia fill line, through which aqueous ammonia is fed from the delivery truck to the tank; and a vapor return line, where vapor pressure between the tanks and the truck is equalized. A double-basket strainer can be used to remove solid impurities in the aqueous ammonia as it is unloaded from the tanker trucks. The concrete slab of the unloading facility will be sloped to drain any accidental tanker truck releases through a drain and pipe. The pipe will lead to the sumps under the ammonia storage tanks. The drainage system will be designed so that the drain openings will have at least twice the area of the delivery hose, enabling near-immediate drainage in the event of a spill. In case of an accidental release, if contents meet the discharge regulations, sump contents will either be discharged to the process drains system or emptied by means of a submersible sump pump into a vacuum truck for treatment.

Ammonia piping located outside the containment basins both above ground and below ground will include fail-safe double-wall containment piping systems. The piping carrying ammonia will be encased with a guardian pipe to contain any potential leakage. The systems will be equipped with leak detection systems that include sensors that will detect the presence of any ammonia leakage into the interstitial space. Control consoles will be provided with audible alarms and alarm lamps to report any detected leakage.

Safety features of the ammonia storage facilities will include:

- Ammonia area monitoring system with audible and visible alarms
- Eyewash and shower stations
- Piping and connections for washdown of containment basins with clean water
- Permanent lighting
- Lightning protection
- Truck barrier posts
- Liquid-level indication and high-level alarms for the tanks that are easily visible from the unloading positions
- Tank level and pressure indicators, pressure relief valves, and alarms in the plant control room
- Shutoff valves on the tank fill lines, which will close automatically if the emergency high-level alarms are triggered
- Local manual shut-offs for all pumps
- Vacuum breaker valves on the tanks

- Safety equipment for personnel including face shields, 10-minute air escape bottles, ammonia-resistant gloves, ammonia-resistant boots, ammonia-resistant pants and jackets/slickers, first aid kits, and fire extinguishers

- Wind detection indicators.

Area sensors will be installed in the ammonia unloading and storage facilities and vaporization skid areas to monitor for ambient ammonia concentrations. Alarms will be designed to annunciate in the control room with local audible alarms for ammonia releases at the facilities.

Maximum ammonia demand for the MLGS will be 152 pounds of NH_3 per hour (38 lbs/hr per SCR unit). For 19 percent aqueous ammonia (19 percent solution), demand is equal to 800 lbs/hr, or approximately 100 gallons per hour (2,400 gal/day).

2.6.10 Nitrogen System

The Siemens FP10 units require a nitrogen system for protection when the gas turbines are shut down. During normal plant operation the nitrogen system will not be in service. The nitrogen will be used for the air-cooled heat exchanger, the HRSG high-pressure system, and the high-pressure main steam system. It will supply gaseous nitrogen to maintain a positive pressure in the systems on plant shutdown. Upon plant shutdown, steam condensation due to cooling causes a pressure drop in the steam systems. If the system pressure is allowed to fall below atmospheric pressure, air ingress may occur and CO_2 entrainment will contaminate the steam system. This will preclude fast startup of the plant until the water chemistry can be restored. The nitrogen system will pressurize the steam systems, preventing air ingress and thus maintaining the correct water chemistry for fast startup of the plant.

The complete nitrogen system including equipment, gas supply, and maintenance service will be provided by a vendor. The equipment includes a 6,000-gallon (558,700-scf) cryogenic liquid storage tank protected by a pressure safety relief device, two ambient air vaporizers, and a pressure and temperature control system. The vaporizers convert the cryogenic liquid nitrogen into a gas by using heat from the surrounding air. Since the ambient air is much warmer than the cryogenic fluid (–280 to –420°F), the heat is transferred across the fins of the vaporizer into the cryogenic liquid. A safety relief valve sized for the maximum flow capacity will provide protection for the system. A remote monitoring system will also be provided to monitor gas supply usage rates and automatically schedule deliveries. The equipment area will be protected by a fence.

The supply pressure at the customer connection point will be between 200 and 250 psig with a minimum temperature of 40°F. The pressure will be regulated to 150 psig before distribution to the equipment. The 50 to 100 psig difference is adequate to account for piping losses. The typical monthly nitrogen volume required is approximately 500,000 scf (5,370 gallons). This nitrogen supply is based on 260 starts per year; 200 hot starts, 50 warm starts, and 10 cold starts.

There are no specific NFPA requirements regarding the location of the equipment because nitrogen is an inert gas and does not support combustion. The only health caution is for inhalation since in high concentrations it can cause asphyxiation; this is not a concern for the MLGS since the equipment will be located outside and not within a confined space.

Service requirements for the equipment include a 120 VAC, 20 amp power supply and an analog phone line; these are to support the remote monitoring system. Additional power is required for lighting in case of a nighttime delivery.

Adequate tanker access will be provided. The liquid nitrogen will be transferred from the tanker using special transfer pipes and valves designed for handling cryogenic liquids. It is expected that a delivery

will be required approximately once a month. Figure 2.5-1c shows the location of the MLGS nitrogen system.

2.7 PROJECT CONSTRUCTION

Engineering, procurement, construction (EPC), and start-up of the MLGS are estimated to take approximately 41 months. Demolition and construction are estimated to take 33 months (see Figure 2.7-1). The project construction schedule, construction staff, and craft manpower, and average frequency of vehicle traffic are detailed in the sections below.

2.7.1 Power Generation Facility

Site mobilization of the project is expected to ensue following receipt of certification. Onsite construction is expected to commence in October 2009. Construction and startup of the Simple Cycle units would be completed by July 2011. The estimated completion date for the FP10 units is June 2012. The schedule has been estimated based on a single-shift, 10-hour day and 50-hour week. The majority of construction operations are expected to take place between 6:00 a.m. and 6:00 p.m. However, longer workdays or work weeks may be necessary to make up schedule delays or complete critical construction activities. During the start-up and testing phase of the project, some activities may continue 24 hours per day, 7 days per week. projected construction staff by month is shown in Table 2.7-1, and on Figure 2.7-2. The onsite workforce will consist of laborers, craftsmen, supervisory personnel, support personnel, and construction management personnel. The estimated construction workforce (craft) by trade is shown in Table 2.7-1 and Figure 2.7-2. The onsite workforce is expected to reach its peak of 403 individuals in June 2011. Construction access to the site will be via Wilbur Avenue. The estimated average and peak numbers of construction staff vehicle round trips per day, and the estimated number of average and peak truck deliveries per day are shown in Table 2.7-2 and on Figure 2.7-3. Truck deliveries normally will be on weekdays between 7:00 a.m. and 5:00 p.m. Construction equipment usage is shown on Table 2.7-3.

2.7.2 Demolition Plan

As a part of ongoing maintenance, Mirant Delta plans to drain, clean, and demolish all of the existing tanks at the CCPP (i.e., Tanks 1 through 8) in 2008. Should this not occur, demolition of Tanks 1 through 5 will occur as a part of the MLGS project construction. Therefore, for the purposes of the AFC, demolition of Tanks 1 through 5 is discussed and analyzed. The tanks were built in the early 1950s and have not been regularly operated since 2003. Most of the former contents (#6 fuel oil) have been removed with only residual amounts remaining below pump suction levels. In addition to the tanks, associated equipment, piping, and asphalt-covered earthen berms surrounding the tanks will be removed prior to construction. The demolition will occur within the limits of the demolition work zone shown on Figure 2.7-4. The workforce and equipment associated with the demolition are included in the construction workforce and construction equipment usage tables (Tables 2.7-1 and 2.7-3).

Utilities will be relocated before demolition commences. Before the tank structure is dismantled, the tanks will be emptied. Clean tank bottoms and foundations will be inspected for any possible signs of product release. All suspected release locations will be thoroughly investigated to determine whether a release has occurred. Where deemed necessary, soil samples and/or groundwater will be collected, analyzed, and evaluated. If it is determined that a release has occurred, the extent of the release will be determined and all responsible and interested parties will be notified. A work plan will be developed to address remediation of the release. Activities addressed in the work plan will be promptly carried out to accommodate the project schedule.

The asphalt covering the tank berms will be removed and hauled offsite to an appropriate recycling (e.g., Antioch Building Materials in Pittsburg, California) or disposal facility (e.g., Keller Canyon in Pittsburg, California).

To reduce demolition impacts, existing storm drains and catch basins will remain, and Best Management Practices (BMPs) will be employed. The BMPs will include maintaining and using all concrete and asphalt pavements, sweeping and dampening pavements as necessary to prevent dust nuisances, watering for dust suppression, and covering all truck loads prior to exiting the demolition work zone.

Wastewater generated during demolition may include shower water, oily water, turbid dust suppression drainage, and storm drain water. Shower water that may contain asbestos will be filtered per U.S. EPA regulations prior to being discharged into self-contained units and disposed of off site. Oily water will be captured and containerized, and recycled or disposed off site. Existing dust suppression and storm-drain water will be managed by existing storm-drain inlets and distribution lines.

2.7.3 Construction Plan

An EPC contractor will be selected for the design, procurement, construction, and start-up of the facility. The EPC contractor will select subcontractors for certain specialty work as required.

2.7.3.1 Mobilization

The EPC contractor construction force will mobilize in approximately October 2009. Site preparation work will include site grading and stormwater control. Crushed rock will be used for temporary roads, laydown, and work areas that are not currently paved.

2.7.3.2 Construction Staffing

Construction staffing is presented in Table 2.7-1. During peak construction in June 2011 (i.e., Month 21) 403 construction staff are expected to be on site. It is expected that the majority of the construction workers will commute daily 90 minutes or less each way to the project site within Contra Costa County. Given the size of the labor force within commuting distance of the site, construction laborers are not expected to relocate for the construction period. It is expected that there would be enough construction workers/laborers available within the study area to meet project demands during the construction period.

2.7.3.3 Construction Laydown Areas, Offices, and Parking

Mobile trailers or similar suitable facilities (e.g., modular offices) will be used as construction offices for contractor and subcontractor personnel. Areas of the CCPP that will be used for construction offices, laydown, and parking are shown on Figure 2.7-3. Site access will be controlled for personnel and vehicles. As necessary, temporary security fences will be installed around the construction laydown areas.

Approximately 14 acres within the CCPP will be used for construction laydown, offices, and parking. A 4.3-acre portion of the CCPP just to the south of the PG&E switchyard will be used for construction laydown. In addition, an approximately 7.5-acre area of the CCPP just east of the MLGS will be used for laydown and offices. This area is currently being used for construction laydown and parking for PG&E's GGS. An additional area will be developed north of the existing CCPP units for parking during peak construction. The construction laydown and parking areas will be graded (as necessary) and surfaced with 4 inches of crushed rock.

Access between the onsite laydown areas and the project site will be on internal plant roads. Deliveries to the onsite laydown areas will be via Wilbur Avenue. The crushed rock surfacing will provide erosion protection. The laydown areas will be fenced around their perimeter. Gates will be provided for access control. At the end of construction, these areas will be cleaned up, but the crushed rock surfacing and fencing will remain in place. No additional restoration will be required at the end of construction.

2.7.3.4 Construction Materials and Equipment Delivery

Construction materials such as concrete, pipe, wire and cable, fuels, reinforcing steel, and small tools and consumables will be delivered to the MLGS site by truck, as shown on Table 2.7-2. Most of the heavy equipment and its components will be transported by rail to the existing spur at the site. The rail spur will be reconditioned for a portion of its length west of the plant access road. Potential candidates for rail shipment are the combustion turbines, GSU transformers, and HRSG modules. Shipments will be off-loaded at the laydown yard. A heavy haul transport will be used to move the equipment to its foundations or assembly point. Truck deliveries and trucks per day by month for the duration of project construction are shown on Figure 2.7-4. Truck deliveries normally will be on weekdays between 7:00 a.m. and 5:00 p.m.

Table 2.7-3 shows the average construction equipment expected to be onsite during project construction.

2.7.3.5 Emergency Facilities

Emergency services will be coordinated with the City of Antioch Fire Department and Community Hospital. An urgent care facility will be contacted to set up nonemergency physician referrals. At least one person trained in first aid will be part of the construction staff. Fire extinguishers will be located throughout the site at strategic locations at all times during construction.

2.7.3.6 Construction Utilities and Site Services

During construction, temporary utilities will be provided for the construction offices, the laydown area, and the project site. Temporary construction power will be furnished via the existing backfeed power distribution system. Area lighting will be provided and strategically located for safety and security.

Construction water will be supplied by the existing CCPP water system and by water truck deliveries as necessary. Average daily use of construction water is estimated to be 8,800 gallons, as shown on Table 2.7-4. The maximum monthly water usage is estimated at 1,323,000 gallons, during hydrotesting of the HRSGs and associated piping. Approximately 150,000 gallons of water will be needed to hydrotest each of the HRSGs for the Flex Plant 10 units. The hydrotest water will be tested, and if suitable will be reused or discharged appropriately. If the water quality is not suitable for discharge, the water will be transported by trucks to an approved offsite disposal facility.

The following site services will be provided during construction:

- Environmental health and safety training
- Site security
- Site first aid
- Construction testing
- Site fire protection and extinguisher maintenance
- Furnishing and servicing of sanitary facilities
- Trash collection and disposal
- Disposal of hazardous materials and waste in accordance with local, state, and federal regulations.

2.7.4 Offsite Roadway Improvements

No offsite roadway improvements are required for the MLGS.

2.7.5 Construction Land Disturbance Control Measures

The MLGS site is within the existing CCPP property. The EPC contractor will implement the following fugitive dust control measures during construction at the project site to minimize the formation of fugitive dust:

- Water unpaved roads and disturbed areas frequently (at least twice a day). Frequency of watering will be increased when wind speeds exceed 15 miles per hour (mph).
- Limit speed of vehicles within construction areas to no more than 15 mph.
- Sweep paved internal roads after the evening peak period.
- Sweep public roadways adjacent to the project site that are used by construction and worker vehicles as necessary.
- Treat the entrance roadways to the construction site with soil stabilization compounds.
- Install windbreaks (optional and as necessary) at the windward sides on construction areas before soil is disturbed. The windbreaks will remain in place until the soil is stabilized or permanently covered. Watering of excavation areas before, during, and after excavation should make use of windbreaks unnecessary.
- Replace ground cover in disturbed areas as quickly as possible.
- Use gravel ramps before entering a public roadway to limit accumulated mud and dirt deposited on public roadways.
- Cover all trucks hauling dirt, sand, soil, or other loose materials, and maintain a minimum of 6 inches of freeboard between the top of the load and the top of the trailer.
- Limit equipment idle times (no more than 15 consecutive minutes).
- Use electric-motor–driven construction equipment when feasible.
- Apply covers or dust suppressants to soil storage piles and disturbed areas.
- Pre-wet soil to be excavated during construction.
- Designate a person to oversee the implementation of the fugitive dust control program.

As discussed in Section 7.1, Air Quality, the fugitive dust mitigation measures listed above are expected to control more than 90 percent of the fugitive dust that occurs during onsite construction.

In addition, a construction Stormwater Pollution Prevention Plan (SWPPP) will be prepared and implemented. A draft construction SWPPP is provided in Appendix H. This plan includes BMPs to be used to minimize erosion.

2.7.5.1 Site-Specific Heath and Safety Plan

A site-specific health and safety plan (HSP) will be developed by the EPC contractor for its scope of work. The HSP will incorporate information and procedures to be followed by onsite personnel for the completion of the work. The HSP will outline requirements and provide guidance for control of construction safety hazards in compliance with safety standards and protection of public health.

2.7.5.2 Air Monitoring and Dust Control Measures

Personal monitoring and OSHA standards are addressed in the HSP. Dust control will comply with the following:

- All structure and building materials will be wet continually for the duration of the demolition to control dust generated during the course of the demolition.
- To control fugitive dust or particles, the operation will conform to Bay Area Air Quality Management District rules and regulations.
- Personnel protective measures will be implemented and monitored as needed.

2.7.6 Construction Security Plan

It is a customary practice for a construction company's employees to work in and around existing facilities and not enter areas designated as unauthorized. Accordingly, contractors typically have established work rules and consequences for being in an unauthorized area.

As indicated in Figure 2.7-5, a number of construction laydown areas are in and around the existing CCPP facility. It will be necessary to control the entry of construction personnel into these areas. In the range of 15 to 25 construction employees will require access into the laydown areas on a somewhat routine basis—particularly in the early stages of construction—for unloading, loading, and trucking materials into the project work site.

2.7.6.1 Security Plan for Construction Areas

The CCPP has an existing perimeter fence; all construction activities will be within the fenced area. A guard will be stationed at the designated gates to control access.

2.7.6.2 Training

All construction employees will be trained on the requirements for entry and exit into the construction areas, and the requirement to stay out of unauthorized areas. A map of the plant site (similar to Figure 2.7-5) will be provided to construction personnel showing the areas they can access. All other areas are unauthorized for entry unless special permission is granted by the Applicant's onsite representative. All employees will be trained on the requirements for entry into unauthorized areas.

2.7.6.3 Work Rules

If the construction companies do not have an established work rule for entry into unauthorized areas, such a rule will be created. Typical disciplinary techniques will include a written warning, suspension, and termination for the first, second, and third offense, respectively, though actual disciplinary action will be determined on a case-by-case basis.

2.8 FACILITY OPERATION

The MLGS operation will be controlled and monitored by highly trained operators during each operating shift. In addition, maintenance and supervisory personnel generally will be present during the day shift, and as required by specific operations or maintenance activities, during night shifts. Plant operation will require approximately 20 full-time permanent Mirant personnel (Table 2.8-1), with 12 employees working a day shift and 8 employees working a rotating shift. The plant will be staffed 7 days a week, 24 hours a day. When the plant is not operating, personnel will be present as necessary for maintenance and to prepare the plant for start-up.

Power produced by the MLGS will be sold into the California wholesale power market and serve electric demand in Northern California. Depending on market demand and the provisions of bilateral sales, in any given hour the plant may be operating at peak load, base load, or part load, with both or with one FP10 unit operating and/or with both or with one Simple Cycle unit operating. Peak-load operation most likely will occur during summer peak hours, and minimum-load operation during off-peak hours. Shutdown periods for annual maintenance will be scheduled during extended periods of low demand, which typically occur in the autumn or spring.

Ancillary services provided by the plant will be sold to market participants. These services include regulation, operation reserves to the extent the plant is not operating at full load, and reactive power production. Black start capability will not be provided.

The design of the MLGS provides for a wide range of operating flexibility; that is, an ability to start up quickly and operate efficiently across its dispatch range. Overall annual availability of the power plant as measured by EAF is expected to be in the range of 92 to 98 percent. The power plant's output will depend on market conditions and dispatch requirements.

2.9 SAFETY AND RELIABILITY

2.9.1 Facility Safety

The MLGS will be designed for safe operation. Potential hazards that could affect project facilities include earthquake, flood, and fire. Safe operation includes safety for the plant operating personnel, who will be trained to provide the proper response to hazards and to avoid unsafe operating conditions.

2.9.1.1 Natural Hazards

A summary of geologic hazards in the MLGS vicinity is provided in Section 7.15, Geologic Hazards and Resources. This summary includes a review of potential geologic hazards, seismic ground motion, and soil liquefaction. The principal natural hazard associated with the site is the potential seismic hazard; the site is located in Seismic Design Category D. All project structures will be designed in conformance with International Building Code (IBC, 2006) criteria for Seismic Design Category D to ensure safety for operating personnel, and adequate protection against structural and equipment damage. The project site is within 5 miles of an earthquake fault. The structural and seismic design criteria for project buildings and equipment are provided in Appendix B.

The project site elevation is at least 9 feet above mean sea level. The MLGS site is not located in a FEMA 100-year flood zone.

2.9.1.2 Onsite Fire Protection Systems

Onsite fire protection systems will be provided to the MLGS to limit personnel injury, property loss, and plant downtime resulting from a fire. The fire protection systems are described in Section 2.5.10, Fire Protection. The facility will have a Fire Protection Plan as outlined in Section 7.7, Worker Safety and Health.

2.9.1.3 Local Fire Protection Services

The MLGS will receive fire protection services from the nearest fire station, which is 2.8 miles away. The project's Risk Management Plan described in Section 7.12, Hazardous Materials Handling, will provide necessary information on hazardous materials to ensure that safe and effective fire-fighting measures are used. Additional information on local emergency services can be found in Section 7.8, Socioeconomics.

2.9.1.4 Personnel Safety Programs

The MLGS will implement the personnel safety programs described in Section 7.7 to provide for personnel safety and ensure compliance with federal and state occupational safety and health requirements.

2.9.2 Reliability and Availability

This section discusses plant reliability and availability, equipment redundancy, fuel availability, water availability, and project quality control measures.

2.9.2.1 Plant Reliability and Availability

The planned operational life of the MLGS is at least 30 years. For this operational life to be realized and the plant to operate reliably, a preventive maintenance program will be implemented for the project. This program will begin during engineering and procurement for the project, when designs and specifications will be reviewed for reliability and maintainability of plant systems and equipment. During the operational phase of the project, the preventive maintenance program will consist of monitoring, record-keeping, and maintenance work to detect and rectify deterioration in systems and equipment before such deterioration results in a forced outage or prolonged maintenance outage.

It is expected that the preventive maintenance program will result in high plant availability. Plant availability refers to the plant's available generating capability during a given period of time. The EAF is a weighted average measure of plant availability considering both full and partial outages. In determining the EAF, outages are weighted by magnitude (i.e., fractional reduction in available generating capacity) and duration. Outages consist of planned overhauls, maintenance outages, and forced outages. The MLGS's annual EAF is expected to be in the range of 92 to 98 percent.

2.9.2.2 Equipment Redundancy

The following subsections identify equipment redundancy as it applies to project availability. Equipment redundancy provides a means for avoiding outages and reducing the magnitude of outages. For example, because the MLGS will include two boiler feed pumps, each of which has 100 percent capacity, an outage of a single pump would not result in a plant outage or derating. Also, because the ACHE will consist of multiple cells, loss of one fan would result in only a minor partial outage (i.e., minor reduction in available generating capacity) rather than a full outage. Redundancy of major equipment is shown in Tables 2.9-1 and 2.9-2. Note that some elements may be subject to modification in the final design.

2.9.2.3 Flex Plant 10 Power Blocks

Each FP10 power block includes a single combustion turbine generator/HRSG train. The two FP10 power blocks will operate in parallel. Each combustion turbine generator will provide approximately 67 percent of the combined-cycle power block output. The heat input from the exhaust gas from each combustion turbine will be used in the HRSG to produce steam. Thermal energy in the steam from the HRSG will be converted to mechanical energy, and ultimately into electrical energy in the STG. The expanded steam from the STG will be condensed and recycled to the feedwater system. Power from the STG will contribute approximately 33 percent of the total combined cycle power block output.

Major components of the FP10 power blocks will consist of the following subsystems:

- **CTG.** The CTG subsystems will include the combustion turbine, inlet air filtration and evaporative cooling system, generator and excitation systems, and turbine control and instrumentation. The combustion turbine will produce thermal energy through the

combustion of natural gas and conversion of the thermal energy into mechanical energy through rotation of the combustion turbine, which drives the air compressor and the generator, which then converts the mechanical energy into electrical energy. Exhaust gas from the combustion turbine will be used to produce steam in the associated HRSG. The generator will be air-cooled. The generator excitation system will be a solid-state static system. Combustion turbine control and instrumentation (interfaced with the DCS) will include the turbine governing system, the protective system, and sequence logic.

- **HRSG.** The HRSG subsystems will consist of the HRSG and blowdown systems. The HRSG system will provide for the transfer of heat from the exhaust gas of a combustion turbine for the production of steam. This heat transfer will produce steam at the pressures and temperature required by the STG. Each HRSG system will consist of ductwork, heat transfer sections, an SCR system, and an oxidation catalyst module. The blowdown system will provide drains for each HRSG boiler drum and include a continuous and intermittent blowdown for each HRSG to control boiler feedwater quality.

- **STG.** The STG will convert the thermal energy in the steam to mechanical energy to drive the generator, which converts the mechanical energy into electrical energy. The basic subsystems will include the steam turbine and auxiliary system, turbine lube oil system, generator, and generator exciter system. The generator will be air-cooled.

- **Boiler Feedwater.** The boiler feedwater system will transfer feedwater from the de-aerator to the HP sections of the HRSGs. The system will consist of two 100 percent boiler feed pumps per CTG/HRSG train. The pumps will be multistage, electric motor-driven, and include regulation of control valves, minimum flow recirculation control, and other associated piping and valves.

- **Condensate.** The condensate system will provide a flow path from the condensate hot well of the air-cooled heat exchanger to the deaerator. The condensate system will include a multiple-fan ACHE; a condensate hot well; and two 100 percent capacity, motor-driven condensate pumps.

- **Air-cooled Heat Exchanger**. Each FP10 unit will have its own 12-cell air-cooled heat exchanger, which provides for the rejection of heat to the atmosphere.

Balance of Plant Systems include:

- **Distributed Control System.** The DCS will be a redundant microprocessor-based system that will provide control, monitoring, and alarm functions for plant systems and equipment. Redundancy will be such that no single processor failure can cause or prevent a unit trip. The DCS will interface with the control systems furnished by the CTG, STG, and water treatment system suppliers to provide remote control capabilities, data acquisition, annunciation, and historical storage of turbine and generator operating information. Plant operation will be controlled from the operator panel, which will be in the control room. The operator control panel consists of individual CRT/keyboard consoles and an engineering workstation.

- **Demineralized-Water System and Power-Cycle Makeup.** The demineralized water system is designed to provide demineralized water for the power-cycle makeup on a continuous basis. It also will be used in the combustion turbine evaporative coolers and power augmentation. A 1.0-million-gallon storage tank will provide one day of

demineralized water capacity at full-load peak conditions if the demineralized water system is down.

- **Compressed Air.** The compressed air system will consist of two skids each with two 50 percent compressors containing the instrument air and service air subsystems. The service air subsystem will have service air headers, and distribution piping and hose connections. The instrument air subsystem will supply dry, compressed air at the required pressure and capacity for all control air demands, including pneumatic controls, transmitters, instruments, and valve operators. The instrument air system will include one dual-tower air dryer with prefilters and after filters, an air receiver, instrument air headers, and distribution piping.

2.9.2.4 Simple Cycle Power Block

The CTG subsystems include the combustion turbine, inlet air filtration and evaporative cooling system, generator and excitation systems, and combustion-turbine control and instrumentation. Redundancy is provided in combustion-turbine subsystems where practical. For example, the lube oil system consists of redundant pumps, filters, and coolers. The microprocessor-based control system consists of redundant microprocessors, as well as redundant sensors for critical measurements. Technology advancements, as well as the redundancy as illustrated above, have led to extremely high reliability for the combustion turbines considered for this project.

Each of the simple-cycle emissions control systems will include two 100 percent capacity tempering air fans.

2.9.2.5 Power Plant Maturation

The anticipated maturation period of the MLGS units will range between 6 and 12 months following commercial operation. Each of the FP10 units' and the Simple Cycle units' first year EAF is estimated to be 85 to 89 percent. Functional testing, performance testing, punchlist resolution, reliability runs, and warranty claims will accelerate the maturation process, as well as extensive quality assurance and control during the commission and start-up of the facility.

2.9.2.6 Commercially Proven Technology

The MLGS design incorporates commercially proven technologies from major equipment suppliers, including Siemens Power Generation, Inc. These frame turbine designs are used throughout the world in this application. Steam-turbine design has been proven for several decades and is well known for excellent reliability.

2.9.2.7 Special Design Features

One special design feature of the MLGS is the ACHE, which will greatly reduce source water requirements. The FP10 units also have quick-start capability, reducing startup emissions.

The project will integrate Leadership in Energy and Environmental Design (LEED) concepts. The LEED certification program is nationally accepted as a benchmark for high performance green buildings. The program has been developed by the U.S. Green Building Council (USGBC), a coalition of public and private organizations and individuals working together to promote environmentally responsible buildings. LEED-NC, now in version 2.2, would be the most appropriate type of system for assessing the buildings and structures supporting a new power plant, as it can be applied to commercial and institutional projects, manufacturing plants, and laboratories.

LEED promotes a whole-building approach to sustainability by focusing on a number of credits organized under six categories of building performance. The LEED credits can be used as both a building rating system, simply evaluating a building's level of sustainability, and as a design tool, setting out the buildings aspirations and offering guidance on how to achieve a high level of efficiency and sustainable performance.

The six main categories from the LEED-NC version 2.2 are:

1. Sustainable sites;
2. Water efficiency;
3. Energy and atmosphere;
4. Materials and resources;
5. Indoor environmental quality; and
6. Innovation and design process.

Table 2.9-3 summarizes potential LEED concepts that could be integrated into the MLGS. Additional information is provided in Appendix T, including a preliminary LEED score sheet. Based on the preliminary concepts identified, the project could receive a Certified or Silver rating.

2.9.2.8 Fuel Availability

The MLGS will be fueled with pipeline-quality natural gas delivered by PG&E. Chapter 5, Natural Gas Supply, contains more detailed information on the natural gas supplied to the MLGS.

2.9.2.9 Water Availability

Raw water makeup (i.e., recycled water) will be supplied to the MLGS from the DDSD BLS. A new water treatment facility will be designed, constructed, and operated by DDSD at the BLS to treat untreated wastewater and produce recycled water that will be available for the MLGS. In addition, a new offsite pipeline for recycled water will be constructed to supply the needs of the facility. Recycled water will be stored on site in a 1.8-million-gallon raw water tank that has sufficient capacity for 24 hours of operation at full-load peak demand.

2.9.2.10 Electric Transmission Interconnection

Generation from the MLGS will be delivered to the PG&E switchyard, immediately adjacent to the CCPP site, by three single-circuit 230-kV transmission lines. All structures will be inspected on a routine basis. Chapter 4, Transmission Facilities, contains more detailed information on the interconnection and Transmission Line Safety and Nuisance.

2.9.2.11 Project Quality Control Measures

The project will require quality control measures to be implemented by suppliers and contractors providing equipment and services to the project. This requirement will apply to the engineering, procurement, construction, and start-up phases of the project. It is expected that such measures will be part of quality assurance programs established by the suppliers and contractors. The project will audit the quality assurance programs, and supplement the programs with independent design reviews, shop inspections, and construction site inspections.

2.10 APPLICABLE LAWS, ORDINANCES, REGULATIONS, AND STANDARDS

Design, construction, and operation of the MLGS, including transmission lines, pipelines, and ancillary facilities, will be conducted in accordance with all LORS pertinent to facility safety, transmission line safety and nuisance, and reliability and availability. LORS applicable to the project are shown in

Table 2.10-1. LORS applicable to transmission line safety and nuisance are discussed in Chapter 4. Note that the design of all structures and facilities will be based on building codes, specifications, industry standards, and regulations. All building permits will be reviewed during the building permit approval process by Contra Costa County or the City of Antioch, depending on the timing of the annexation.

The applicable LORS are discussed in the following sections.

2.10.1.1 Power Plant Reliability

The following LORS are applicable to the MLGS in the context of power plant reliability and availability.

Industry Codes and Standards

Currently, there are no industry codes or standards that govern power plant reliability; however, there are trade organizations and associations that are generally recognized as authorities and leaders in the field of power plant availability and reliability. Definitions used by these organizations have become generally accepted as a common means of communicating, and the data published have been found to be useful. The organizations are:

- Electric Power Research Institute (EPRI). Copies of reports can be obtained from the Research Reports Center:

  3412 Hillview Avenue
  Palo Alto, California 94304-1395
  (650) 855-2000

- North American Electric Reliability Council (NERC):

  Princeton Forrestal Village
  116-390 Village Boulevard
  Princeton, New Jersey 08540
  (609) 452-8060

MLGS Compliance with Power Plant Reliability

The MLGS will be designed for reliable operations for an expected project life of at least 30 years. To create and maintain reliable operations, the MLGS will include a maintenance program, equipment redundancy, dependable fuel source, and water supply.

2.10.1.2 Efficiency

CEQA requires that a power plant or other new project not waste energy. CEQA also requires that the project be more efficient in energy use than alternatives to the project.

2.10.1.3 Engineering Geology

Unless specifically stated otherwise, the design of all structures and facilities will be based on the laws, ordinances, codes, specifications, industry standards, regulations, and other reference documents in effect at the time of design. Applicable codes and industry standards with respect to the project's engineering geology are summarized in sections of Appendix A, Civil Engineering Design Criteria; and Appendix B, Structural Engineering Design Criteria.

2.10.1.4 Civil and Structural Engineering

Unless specifically stated otherwise, the design of all structures and facilities will be based on the laws, ordinances, codes, specifications, industry standards and regulations, and other reference documents in effect at the time of design. Applicable codes and industry standards with respect to the project's engineering design criteria, construction, and operation are summarized in Appendix A, Civil Engineering Design Criteria; and Appendix B, Structural Engineering Design Criteria.

2.10.1.5 Mechanical Engineering

Unless specifically stated otherwise, the design of all structures and facilities will be based on the laws, ordinances, codes, specifications, industry standards and regulations, and other reference documents in effect at the time of design. Applicable codes and industry standards with respect to the project's mechanical engineering design criteria, construction, and operation are summarized in Appendix C, Mechanical Engineering Design Criteria.

2.10.1.6 Electrical and Control Systems Engineering

Unless specifically stated otherwise, the design of all structures and facilities will be based on the laws, ordinances, codes, specifications, industry standards and regulations, and other reference documents in effect at the time of design. Applicable codes and industry standards with respect to the project's electrical engineering design criteria, construction, and operation are summarized in Appendix D, Electrical Engineering Design Criteria.

2.10.1.7 Seismic Design

The project site is in Seismic Design Category D. Structures, their foundations, and equipment will be designed in accordance with the 2007 International Building Code. Electrical substation equipment will be designed to meet the requirements of Institute of Electrical and Electronics Engineers (IEEE) 693-1997, Recommended Practice for Seismic Design Substations.

2.11 INVOLVED AGENCIES AND AGENCY CONTACTS

Agency contacts regarding facility design of the MLGS are provided in Table 2.11-1.

2.12 REFERENCES

IBC (International Building Code), 2007.

Table 2.5-1a
Heat and Material Balance Case Descriptions – Flex Plant 10 Power Blocks

Case		Ambient Temperature (°F)	Relative Humidity (percent)	CTG Load (percent)	Evaporative Cooling	Power Augmentation
1	A	94	32	100	Yes	Yes
	B	94	32	85	Yes	No
	C	94	32	60	Yes	No
2	A	75	54	100	Yes	Yes
	B	75	54	85	Yes	No
	C	75	54	60	Yes	No
3	A	20	90	100	No	No
	B	20	90	85	No	No
	C	20	90	60	No	No

Table 2.5-1b
Heat and Material Balance Case Descriptions
Siemens 5000F Simple Cycle Power Blocks

Case		Ambient Temperature (°F)	Relative Humidity (percent)	CTG Load (percent)	Evaporative Cooling	Power Augmentation
4	A	94	32	100	Yes	n/a
	B	94	32	75	Yes	n/a
	C	94	32	60	Yes	n/a
5	A	75	54	100	Yes	n/a
	B	75	54	75	Yes	n/a
	C	75	54	60	Yes	n/a
6	A	20	90	100	No	n/a
	B	20	90	75	No	n/a
	C	20	90	60	No	n/a

Note:
n/a = not applicable

Table 2.5-2
Major Mechanical Equipment

Equipment	Quantity	Size/Capacity	Service/Remarks
Common Structures			
Natural gas compressor	3	198,000 lbs/hr each	Combustion turbine fuel (3 × 50 percent)
Combustion turbine fuel gas filter separators	2	198,000 lbs/hr each	Natural gas fuel
Two Siemens Flex Plant 10 Power Blocks			
Combustion turbine generators (CTGs)	2	Siemens SGT6-5000F, 190 MW each	ULN combustion control with inlet air evaporative coolers, capacity excludes power augmentation
Steam turbine generator (STG)	2	SST-800 60MW each	Back pressure STG
Heat Recovery Steam Generators (HRSGs)	2	1,700 psig steam each	Single pressure
Aqueous ammonia storage	1	20,000 gallons	NOx control (19 percent by weight ammonia solution)
SCR catalyst	2	n/a	NO_X control
Oxidation catalyst	2	n/a	VOC and CO control
HRSG stacks	2	21 feet, 4 inches in diameter × 150 feet, 6 inches high each	Includes silencers and damper
Continuous emissions monitoring system (CEMS)	2	n/a	NO_X, CO, and O_2
HP boiler feedwater pumps	4	n/a	2×100 percent per train
Air compressor and dryer	4	n/a	4 x 50 percent
Air-cooled heat exchanger	2	n/a	Condenser designed to allow 100 percent steam bypass of STG
Condensate pumps	4	n/a	Horizontal (2 × 100 percent capacity per train)
Two Siemens 5000F Simple-Cycle-Power Blocks			
Combustion turbine generators (CTGs)	2	Siemens 5000F 190 MW	ULN combustion control with inlet air evaporative coolers
Aqueous ammonia storage	1	20,000 gallons	NO_X control (19 wt percent ammonia solution)
SCR catalyst	2	n/a	NO_X control
Oxidation catalyst	2	n/a	VOC and CO control
SCR stacks	2	31 feet, 4 inches in diameter × 150 feet 6 inches high	Includes silencers and damper
Continuous emissions monitoring system (CEMS)	2	n/a	Monitors NO_X, CO, and O_2

Notes:
CO = carbon monoxide
gpm = gallons per minute
lbs/hr = pounds per hour
mmBtu/hr = million British Thermal Units per hour
MW = megawatts
n/a = not available
NO_x = nitrogen oxides
O_2 = oxygen
psig = pounds per square inch
ULN = ultra low nitrogen
VOC = volatile organic compound

Table 2.5-3
BLS Influent Water Quality, Projected BLS Effluent Water Quality, and Specifications
(Page 1 of 2)

Constituent		BLS Influent and Effluent Water		Specifications		
		Influent (Untreated wastewater)[1]	Effluent (Recycled Water)[2]	MLGS Raw Water	RO Feedwater	Evaporative Cooler Circulation Water
General						
Alkalinity, M (Total)	mg/L $CaCO_3$	280	> 100	**> 100**		**< 500**
Alkali metals	mg/L Na + K					**< 500**
Carbon dioxide	mg/L CO_2	18	6			
Carbon, total organic	mg/L C	56				
Chlorine, total residual	mg/L Cl_2		0.1 – 0.3	**0.1 – 0.3**		
Conductivity	µmhos	2,000	2,021			**< 5,000**
Hardness, total	mg/L $CaCO_3$	473	473			
Oil and grease	mg/L					**< 10**
Oxygen	mg/L O_2	6.3				
Oxygen demand, biochem.	mg/L O_2	140		**< 5**		
Oxygen demand, chem.	mg/L O_2	460				
pH		7.5	> 7.5	**> 7.5**		**7 - 9**
Silica	mg/L SiO_2	31	31	**< 100**	**< 100**	
Solids, total dissolved	mg/L ions	1,400	1,415			**< 3,000**
Solids, total suspended	mg/L	180				**< 30**
Turbidity	NTU	66	< 1	**< 1**	**< 1**	
Trace Constituents						
Aluminum, total	mg/L Al	1.000	< 0.05	**< 0.05**		
Barium, total	mg/L Ba	0.084	< 0.05	**< 0.05**	**< 0.05**	
Iron, total	mg/L Fe	0.38	< 0.05	**< 0.05**	**< 0.05**	**< 1**
Heavy metals	mg/L Fe, Mn, Cu, V, Pb					**< 1**
Manganese, total	mg/L Mn	0.03	0.03	**< 0.5**	**< 0.5**	**< 0.2**
Strontium, total	mg/L Sr	0.980	<0.10	**< 0.1**	**< 0.1**	
Cations						
Ammonium	mg/L NH_4	41	< 0.3	< 0.3		
Calcium	mg/L Ca	130	130			**< 200**
Magnesium	mg/L Mg	36	36			
Potassium	mg/L K	24	24			
Sodium	mg/L Na	180	203			
Anions						
Bicarbonate	mg/L $CaCO_3$	341	61			
Carbonate	mg/L $CaCO_3$	0.5	0.1			
Chloride	mg/L Cl	230	230			**< 300**
Fluoride	mg/L F	0.48	0.48			

Table 2.5-3
BLS Influent Water Quality, Projected BLS Effluent Water Quality, and Specifications
(Page 2 of 2)

Constituent		BLS Influent and Effluent Water		Specifications		
		Influent (Untreated wastewater)[1]	Effluent (Recycled Water)[2]	MLGS Raw Water	RO Feedwater	Evaporative Cooler Circulation Water
Nitrate	mg/L NO_3		141			
Phosphate	mg/L PO_4	7.4	0.20	< 0.5		
Sulfate	mg/L SO_4	500	500			
Corrosion and Scaling Indices						
Larson - Skold		3.0	8.4			
Langelier (LSI)		0.57	0.12			0.25 – 0.75
Ryznar (RSI)		6.36	7.26			5.5 – 6.5
Diagnostics						
Total Cations	mg/L $CaCO_3$	1,013	898			
Total Anions	mg/L $CaCO_3$	1,137	1,010			
Charge Imbalance	%	11.6	11.7			

Notes:

$CaCo_3$ = calcium carbonate
Cu = copper
K = potassium
mmhos = micromhos
mg/L = milligrams per liter
NTU = nephelometric turbidity units
Pb = lead
RO = reverse osmosis
V = vanadium

[1]From grab sample taken by DDSD 02/08/08. Analyzed by Caltest Analytical Laboratory sample identification codes 89427 and 89428.
[2]Estimated quality based on grab sample results with ammonia converted to nitrate, associated alkalinity reduction, phosphate reduction, and supplemental alkalinity addition while maintaining electroneutrality.

Table 2.5-4
Daily and Annual Average Water Consumption and Wastewater Discharge Requirements

Water Service/Use[1]	Average Daily Use[2] (gpm)	Maximum Daily Use[3] (gpm)	Annual Use[4] (AFY)
Siemens Flex Plant 10 Combined-Cycle Units			
• Power augmentation steam	534	534	424
• Evaporative cooler makeup	152	248	24
• HRSG blowdown quench water	20	20	16
• HRSG blowdown flash tank vent and miscellaneous losses	16	16	13
• HRSG blowdown	8	8	7
Siemens Simple Cycle Units			
• Evaporative cooler makeup	88	248	70
Reverse osmosis reject	241	275	179
Service water	4	12	3
Total Plant Makeup Water Usage Requirements	**1,063**	**1,361**	**736**
Potable water	1	1	2
Process wastewater	393	563	252
Sanitary wastewater	1	1	2

AFY = acre-feet per year
gpm = gallons per minute

Notes:

1. See Figure 2.5-8 for detailed water balance figure.
2. Average daily water use is based on both FP10 combined-cycle units at full generating capacity with evaporative cooling and power augmentation on whenever dry bulb temperature is above 59° F (49.3 percent of the time). 3. Maximum daily use is based on peak summer conditions (94° F) and 32 percent relative humidity for all FP10 combined-cycle and 5000F units operating at full generating capacity.
4. Average annual use takes downtime into account. It is therefore based on the average daily use attenuated by an average annual capacity factor of approximately 50 percent and 10 percent for the FP10 combined-cycle units and 5000F Simple Cycle units, respectively. Values shown on table are based on the annual average normalized values shown on Figure 2.5-8.

Table 2.5-5
MLGS Process Wastewater Composition

Constituent		Daily Average[1]	Annual Average	Peak
General				
Alkalinity, M (Total)	mg/L	270	290	240
Carbon dioxide	mg/L CO_2	5.5	5.9	4.9
Conductivity	µmhos	5,544	5,954	4,928
Hardness, total	mg/L	1,278	1,373	1,136
Oil and grease	mg/L	< 1	< 1	< 1
pH		8	8	8
Silica	mg/L SiO_2	84	90	74
Solids, total dissolved	mg/L ions	3,881	4,168	3,449
Trace Constituents				
Aluminum, total	mg/L Al	< 0.1	< 0. 1	< 0. 1
Barium, total	mg/L Ba	< 0.1	< 0.1	< 0.1
Iron, total	mg/L Fe	< 0.1	< 0.1	< 0.1
Manganese, total	mg/L Mn	< 0.1	< 0.1	< 0.1
Strontium, total	mg/L Sr	2.6	2.8	2.4
Cations				
Ammonium	mg/L NH_4	0.8	0.9	0.7
Calcium	mg/L Ca	351	377	312
Magnesium	mg/L Mg	97	104	86
Potassium	mg/L K	65	70	58
Sodium	mg/L Na	548	589	487
Anions				
Bicarbonate	mg/L	326	350	290
Carbonate	mg/L	1.5	1.6	1.3
Chloride	mg/L Cl	621	667	552
Fluoride	mg/L F	1.3	1.4	1.2
Nitrate	mg/L NO_3	381	410	339
Phosphate	mg/L PO_4	0.5	0.6	0.5
Sulfate	mg/L SO_4	1,350	1,450	1,200
Corrosion and Scaling Indices				
Larson - Skold		8.45	8.45	8.45
Langelier (LSI)		1.44	1.50	1.34
Ryznar (RSI)		5.12	5.00	5.32
Diagnostics				
Total Cations	mg/L	2,561	2,751	2,277
Total Anions	mg/L	2,863	3,075	2,545
Charge Imbalance	%	11.1	11.1	11.1

Notes:
[1] From MLGS water balance using shown on Figure 2.5-8. [2]

Table 2.5-6
Summary of Anticipated Construction Waste Streams and Management Methods
(Page 1 of 2)

Waste Stream	Anticipated Waste Stream Classification	Estimated Quantity	Estimated Frequency of Generation	Waste Management Method	
				Onsite	Offsite Treatment
Demolition					
Exterior Tank Insulation	Class 3 Waste	200 tons	once	N/A	Class II/III disposal
Metal	Scrap	3,000 tons	once	N/A	Recycle at offsite metal reclamation plants
Fuel Oil Tank Pump and Motor Concrete Pads	Recyclable	1,500 cubic yards	once	N/A	Recycle at offsite concrete crushing plants
Asbestos Waste	California Hazardous	1,416 cubic yards	once	N/A	Disposal at certified landfill facility
Fuel Oil Tank Residual	Nonhazardous	883,424 gallons	once	N/A	Local Recyclers
Residual Pipe Fuel Oil	Nonhazardous	3,000-5,000 gallons	once	N/A	Local Recyclers
Asphalt from Tank Berms	Nonhazardous	12,920 cubic yards	once	N/A	Local recyclers or disposal
Construction					
Scrap wood, steel, glass, plastic, paper, calcium silicate insulation, mineral wool insulation, cardboard and corrugated packaging.	Nonhazardous solids	120 cubic yards	Weekly	Containerize, housekeeping	Recycle and/or Class II/III landfill disposal
Empty hazardous material containers	Hazardous solids	1 cubic yard	Weekly	Store for less than 90 days	Recycle and/or Class I/II landfill disposal
Spent welding materials	Hazardous solid	Less than 1 cubic yard	Monthly	Containerize	Dispose at Class I landfill
Drained waste oil filters	Hazardous solid	100 pounds	Monthly	Containerize	Dispose at Class II landfill

Table 2.5-6
Summary of Anticipated Construction Waste Streams and Management Methods
(Page 2 of 2)

Waste Stream	Anticipated Waste Stream Classification	Estimated Quantity	Estimated Frequency of Generation	Waste Management Method	
				Onsite	Offsite Treatment
Used and waste lube oil during CTG and STG lube oil flushes	Hazardous or non-hazardous liquids	20,000 gallons	360 drums over life of construction	Store for less than 90 days	Oil will be used for first fill after CTG and STG flushes are complete.
Oil rags, oil absorbent generated during normal construction activities excluding lube oil flushes	Hazardous solids	Less than 2 cubic yards	Monthly	Store for less than 90 days	Oily rags would be recycled. Class I landfill disposal for other solids.
Solvents, paint, adhesives and aerosols	Hazardous liquids	2 drums	Monthly	Store for less than 90 days	Recycle or disposal at TSDF.
Spent lead acid batteries	Hazardous solids	2 batteries	Yearly	Store for less than 1 year	Recycle
Spent alkaline batteries	Hazardous solids	60 batteries	Monthly	Store for less than 1 year	Recycle
Waste oil from oil waste holding tank (construction equipment lube oil)	Hazardous liquids	33 gallons	Monthly	Store for less than 90 days	Recycle
Sanitary waste from potable chemical toilets and construction office holding tanks	Nonhazardous liquids	3,000 gallons	Daily	Periodically pumped to tanker truck by licensed contractors	Removed from site by sanitary toilet constructor
Stormwater from construction area	Nonhazardous liquids	1,326,200 gallons (2-year, 24-hour storm event)	As needed during rainy season	Detain and discharge per NPDES permit requirements	
Fluorescent, mercury vapor lamps	Hazardous solids	30	Yearly	Store for less than 1 year	Recycle
HRSG cleaning and flushing	Hazardous liquids	300,000 gallons	Once before initial startup	Store for less than 90 days if hazardous	Solution will be removed and treated offsite
Hydrotest water	Hazardous or nonhazardous liquids	150,0000	As needed	Sample/test. Reuse or discharge if suitable.	If hazardous, dispose to TSDF

N/A=not applicable

Table 2.5-7
Summary of Anticipated Operating Waste Streams and Management Methods
(Page 1 of 3)

Waste Stream	Waste Stream Classification	Estimated Amount	Estimated Frequency of Generation	Waste Management Method	
				Onsite	Offsite Treatment
Used lubricating oil/oil solvents from small leaks and spills from turbine lubricating oil system	Hazardous liquid	800 pounds	Yearly	Store for less than 90 days	Recycle
Used lubricating oil filters from turbine lubricating oil system	Hazardous solids	1,100 pounds	Yearly	Store for less than 90 days	Disposal of drained filters to a Class II landfill
Used lubricating oil from maintenance of turbine equipment	Hazardous liquid	4,400 pounds	Yearly	Store for less than 90 days	Recycle
Solvents, paint and adhesives	Hazardous liquid	60 pounds	Monthly		Disposal to a licensed Treatment, Storage, and Disposal Facility
Laboratory analysis waste from water treatment	Hazardous solids	60 gallons	Yearly		Disposal to a licensed Treatment, Storage, and Disposal Facility
Spent SCR catalyst (heavy metals, including vanadium)	Hazardous solids	100 to 110 tons	Every 7 to 10 years	Removed to truck by licensed contractors	Recycled by SCR manufacturer or disposed in Class I landfill
Spend CO catalyst (heavy metals)	Hazardous solids	18 to 19 tons	Every 7 to 10 years		Recycled by manufacturer
Spent lead acid batteries	Hazardous solids	6 batteries	Lead Acid – Yearly	Store for less than 1 year	Recycle

Table 2.5-7
Summary of Anticipated Operating Waste Streams and Management Methods
(Page 2 of 3)

Waste Stream	Waste Stream Classification	Estimated Amount	Estimated Frequency of Generation	Waste Management Method	
				Onsite	Offsite Treatment
Spent alkaline batteries	Hazardous solids	60 pounds	Alkaline - Monthly	Store for less than 1 year	Disposal to a licensed Treatment, Storage, and Disposal Facility
Unbroken fluorescent bulbs, mercury vapor lamps	Hazardous solids	60 pounds	Yearly	Store for 1 year	Reclaim mercury; disposal to a licensed Treatment, Storage, and Disposal Facility
Broken fluorescent bulbs	Hazardous solids	Less than 10 pounds	Monthly	Store for less than 90 days	Disposal to a licensed Treatment, Storage, and Disposal Facility
Waste oil from oil-water separator	Hazardous liquid	Less than 6 US gallons	Daily	Store for less than 90 days	Recycle
Oily rags, oil absorbent from CTG and other users of hydraulic actuators and lubricants	Hazardous solids	300 pounds (approximately 800 rags)	Weekly	Store for less than 90 days	Oily rags would be recycled Class I landfill disposal for other solids

Table 2.5-7
Summary of Anticipated Operating Waste Streams and Management Methods
(Page 3 of 3)

Waste Stream	Waste Stream Classification	Estimated Amount	Estimated Frequency of Generation	Waste Management Method	
				Onsite	Offsite Treatment
Chemical feed area drainage (spillage, tank overflow, or area washdown water)	May be hazardous if high or low pH	Minimal	Yearly	If contamination is suspect, immediately contain. Store onsite for less than 90 days or trucked offsite.	Test prior to discharge. If nonhazardous, discharge to DDSD. If hazardous, drummed or tanker trucked to a licensed Treatment, Storage, and Disposal Facility
CTG used air filters	Nonhazardous solids	Several hundred filters	Every 5 years	Store for less than 90 days	Recycle/Class II/III landfill disposal
CTG water wash	Hazardous or nonhazardous liquids	5,000 US gallons	Quarterly	Sample. Store hazardous portion for less than 90 days	Test prior to discharge. Dispose to a TSDF if hazardous
Hydraulic Fluid	Hazardous	<50 gallons	Yearly		Recycle
Sanitary wastewater	Nonhazardous liquids	1,440 US gallons	Daily		Discharge to DDSD
Stormwater	Nonhazardous liquids	1,326,200 US gallons	For a once in 2 year, 24 hour storm event	Stormwater program	Discharge to San Joaquin River, except stormwater from curbed areas discharge to DDSD

Table 2.5-8
Fire Protection Systems Design Conditions

Location	Type of System
Buildings	Automatic Clean Agent System per NFPA for control room. Wet/dry/pre-action sprinkler system or FM-200® waterless fire protection system for administrative areas and offices. Fire water supply is from an on-site water system.
Turbines	A Carbon Dioxide (CO_2) System per Turbine Manufacturer standards is provided for each CTG.
Throughout Plant	An automatic wet pipe sprinkler system, portable ABC -rated fire extinguishers in all areas, and hose reel stations with 100-foot hose.
Outside Areas	Dry barrel-type fire hydrants are designed, installed, and located as per NFPA 24 and as required per local jurisdiction. The location of the hydrants is not more than 300 feet apart in all outside areas as required by code.

Note:
NFPA = National Fire Protection Association

Table 2.5-9 Average Calculated Illumination Levels		
Location	**Maintained Average Foot-Candles**	**Illumination Lux**
Air conditioning equipment room	10	100
Outdoor platforms and stairways (HRSG, tanks etc.)	5	50
Control room and administrative rooms (adjustable)	50	500
Control room emergency lighting	15	150
Electrical rooms	30	300
Toilet rooms	20	200
Combustion turbine/steam turbine areas	5	50
Water treatment area	2	20
Chemical injection skids	2	20
Parking lot	1	10
Pipe rack	2	20
Main step-up transformers	2	20
Building perimeter	2	20

Table 2.6-1
Major Structures
(Page 1 of 2)

Structure	Quantity	Size, L×W×H (feet)	Service/Remarks	Visual
Common Structures				
Natural gas compressor enclosure	1	50 × 75 × 12		Corrugated steel, painted gray
Water treatment building	1	68 × 86 × 15		Corrugated steel, painted gray
Demineralized water storage tank	1	55 feet DIA × 55 feet	1.0-million-gallon tank HRSG makeup	Steel tank, painted gray
Raw water storage tank	1	82 feet DIA × 45 feet	1.8-million-gallon capacity	Steel tank, painted gray
Waste water storage tank	1	50 feet DIA × 50 feet	750,000-gallon capacity	Steel tank, painted gray
Reverse osmosis permeate tank	1	55 feet DIA × 55 feet	1.0-million-gallon capacity	Steel tank, painted gray
Transmission structure	11	100 foot High A-Frame		Weathered or galvanized steel structure,
Admin/control building	1	43 × 142 × 12		Corrugated steel, painted gray
Siemens Flex Plant 10 Power Block				
Combustion turbine generators	2	75 × 47 × 76 (top of inlet air filter)	ULN combustion control with evaporative inlet air coolers	Industrial equipment, primarily steel painted gray
Steam turbine generator	2	60 × 22 × 28 including support structures	Back pressure STG	Industrial equipment located inside metal panel enclosure, painted gray
Heat recovery steam generators	2	123 × 25 × 88	Single pressure	Industrial equipment Casing and ducting steel painted gray Steam drums on top, silver metal insulation

Table 2.6-1
Major Structures
(Page 2 of 2)

Structure	Qty	Size, L×W×H (feet)	Service/Remarks	Visual
Aqueous ammonia storage tanks	1	35 feet 6 inches × 10 feet DIA	NO_X control (19 wt percent ammonia solution)	Steel horizontal tank, painted white
HRSG stacks	2	21 feet 4-inch DIA 150 feet, 6 inches tall	Self-supported	Steel vertical cylinder, painted gray
Air-cooled Heat Exchanger	2	132 × 84 × 44	12 Cells	Industrial equipment, coil and fan assembly with painted gray steel side (wind) walls on 22 feet tall steel support structure, painted gray.
Siemens 5000F Simple-Cycle Power Block				
CTG	2	75 × 47 × 76 (top of air filter)	ULN combustion control w/evap coolers	Industrial equipment
SCR	2	123 × 25 × 88		Industrial equipment
SCR stacks	2	31 feet, 4 inches DIA × 150 feet, 6 inches high		Steel vertical cylinder, painted gray
Aqueous ammonia storage tanks	1	35 feet, 6 inches × 10 DIA	NO_X control (19 wt percent ammonia solution)	Steel horizontal tank, painted white

HRSG = heat recovery steam generator
NO_x = oxides of nitrogen
STG = steam turbine generator
ULN = ultra low NO_x

Note: Gray is ANSI 61 or similar

Table 2.7-1a
Construction Staff by Trade

	2009			2010												2011												2012					
	Oct	Nov	Dec	Jan	Feb	Mar	Apr	May	Jun	Jul	Aug	Sep	Oct	Nov	Dec	Jan	Feb	Mar	Apr	May	Jun	Jul	Aug	Sep	Oct	Nov	Dec	Jan	Feb	Mar	Apr	May	Jun
Month	**1**	**2**	**3**	**4**	**5**	**6**	**7**	**8**	**9**	**10**	**11**	**12**	**13**	**14**	**15**	**16**	**17**	**18**	**19**	**20**	**21**	**22**	**23**	**24**	**25**	**26**	**27**	**28**	**29**	**30**	**31**	**32**	**33**
Craft/Trade																																	
Boilermakers	0	0	0	0	0	0	2	5	8	12	20	31	37	39	39	40	41	47	60	58	65	56	59	42	28	21	17	8	0	0	0	0	0
Carpenters	0	0	1	3	5	9	12	12	14	14	11	11	6	4	3	2	3	4	4	3	2	1	0	0	0	0	0	0	0	0	0	0	0
Electricians	0	0	0	0	0	0	0	0	0	0	7	16	26	38	52	66	79	78	68	59	54	56	63	80	102	98	110	95	99	71	47	35	29
Ironworkers	0	0	1	3	6	11	17	22	30	37	40	30	14	5	3	1	1	1	1	1	1	0	0	0	0	0	0	0	0	0	0	0	0
Laborers	7	20	34	36	27	21	19	19	23	22	18	17	10	7	4	2	3	4	4	3	2	1	0	0	0	0	0	0	0	0	0	0	0
Pipe Fitters	0	0	0	0	0	0	5	11	18	26	45	72	86	95	96	105	109	127	162	156	175	150	157	112	74	56	45	21	0	0	0	0	0
Painters and Insulators	0	0	0	0	0	0	0	0	0	0	0	0	0	0	0	0	1	1	0	0	0	0	0	2	4	5	8	5	5	5	5	3	2
Cement Finisher	0	0	1	5	10	16	21	22	26	25	21	19	12	7	4	1	1	1	1	1	1	1	0	0	0	0	0	0	0	0	0	0	0
Millwrights	0	0	0	0	0	0	6	13	22	32	46	63	71	66	56	45	39	36	46	45	50	43	45	32	21	16	13	6	0	0	0	0	0
Operating Engineers	5	16	26	25	15	6	1	2	2	4	5	3	1	0	0	0	1	1	1	1	0	0	0	0	0	0	0	0	0	0	0	0	0
Teamsters	1	4	7	6	4	1	0	0	0	0	0	0	0	0	0	0	1	1	1	1	0	0	0	0	0	0	0	0	0	0	0	0	0
Total Craft	13	40	69	79	67	63	81	105	143	170	214	262	264	263	258	263	278	302	349	328	351	309	324	268	229	196	194	135	104	76	52	38	31
Contractor Staff	19	19	20	21	21	21	25	28	28	28	29	29	23	26	31	34	34	38	48	51	52	52	50	49	47	48	41	34	29	23	12	6	4
Total Site Staff	32	59	89	100	88	84	106	133	171	198	243	291	287	289	289	297	312	340	397	379	403	361	374	317	276	244	235	169	133	99	64	44	35

Table 2.7-1b
Construction Contractor Staff by Trade

	2009			2010												2011												2012					
	Oct	Nov	Dec	Jan	Feb	Mar	Apr	May	Jun	Jul	Aug	Sep	Oct	Nov	Dec	Jan	Feb	Mar	Apr	May	Jun	Jul	Aug	Sep	Oct	Nov	Dec	Jan	Feb	Mar	Apr	May	Jun
Month	**1**	**2**	**3**	**4**	**5**	**6**	**7**	**8**	**9**	**10**	**11**	**12**	**13**	**14**	**15**	**16**	**17**	**18**	**19**	**20**	**21**	**22**	**23**	**24**	**25**	**26**	**27**	**28**	**29**	**30**	**31**	**32**	**33**
Construction Project Manager	1	1	1	1	1	1	1	1	1	1	1	1	1	1	1	1	1	1	1	1	1	1	1	1	1	1	1	1	1	1	1	1	1
Construction Coordinator (Project Engr.)	1	1	1	1	1	1	1	1	1	1	1	1	1	1	1	1	1	1	1	1	1	1	1	1	1	1	1	1	1	1	1	1	1
CSA Coordinator (inc survey)	3	3	3	3	3	3	3	3	3	3	3	3		4	4	4	4	5	5	5	5	4	4	4									
Mech. Coordinator														1	1	1	1	1	1	1	1	1	1										
Elec. Coordinator				1	1	1	1	1	1	1	1	1	1	1	1	1	1	1	1	1	1	1	1	1	1	1	1	1	1				
Const. Coordinator - Cablematic Tech																				1	1	1	1	1	1	1	1	1	1				
Subcontracts Administrator														1	1	1	1	1	1	1	1	1	1	1	1	1							
Equipment Administrator														1	1	1	1	1	1	1	1	1	1	1	1	1							
Document Control Clerk	1	1	1	1	1	1	1	1	1	1	1	1	1	1	1	1	1	1	1	1	1	2	2	2	2	2	2	2	2	2	1		
Project Superintendent	1	1	1	1	1	1	1	1	1	1	1	1	1	1	1	1	1	1	1	1	1	1	1	1	1	1	1	1	1	1	1	1	1
Civil/Structural/Buildings Superintendent	1	1	1	1	1	1	1	1	1	1	1	1		1	1	1	1	1	1	1	1	1	1	1									
HRSG Superintendent																		1	1	1	1	1	1	1	1	1	1	1					
CTG/STG Turbine Superintendent								1	1	1	1	1	1						1	1	1	1	1	1	1	1							
Piping Superintendnet	1	1	1	1	1	1	1	1	1	1	1	1	1	1	1	1	1	1	2	2	2	2	2	2	2	2	1	1	1	1			
Electrical Superintendent	1	1	1	1	1	1	1	1	1	1	1	1	1	1	1	1	1	1	2	2	2	2	2	2	2	2	2	2	1	1			
Night Shift Superintendent																									1	1	1						
Construction Equipment Superintendent																			1	1	1	1	1	1	1	1	1	1	1				
Project Scheduler	1	1	1	1	1	1	1	1	1	1	1	1	1	1	1	1	1	1	1	1	1	1	1	1	1	1	1	1	1	1	1		
Cost Engineer	1	1	1	1	1	1	1	1	1	1	1	1	1	1	1	1	1	1	1	1	1	1	1	1	1	1	1	1	1	1	1		
Procurement Manager	1	1	1	1	1	1	1	1	1	1	1	1	1	1	1	1	1	1	1	1	1	1	1	1	1	1	1	1	1	1	1		
Warehouse Superintendent	1	1	1	1	1	1	1	1	1	1	1	1	1		1	1	1	1	1	1	1	1	1	1	1	1	1	1	1	1			
Warehouse Clerk	1	1	2	2	2	2	2	3	3	3	3	3	3		1	2	2	2	3	3	3	3	3	3	3	3	1	1	1	1			
Start-Up Manager							1	1	1	1	1	1	1					1	1	1	1	1	1	1	1	1	1	1	1	1	1		
Start Up Tech - Mech.							1	1	1	1	1							1	3	3	3	3	1										
Start up Tech - Electrical												1	1											1	1	1	1	1	1	1			
Start Up tech - I & C																									1	1	1	1	1	1			
Controls/DCS Engineer																										1	1	1	1	1			
Turnover Package Coordinator								1	1	1	1	1	1						1	1	1	1	1	1	1	1	1	1	1	1	1		
Start-Up Clerk											1	1	1										1	1	1	1	1	1	1	1			
Safety/security Manager	1	1	1	1	1	1	1	1	1	1	1	1	1	1	1	1	1	1	1	1	1	1	1	1	1	1	1	1	1	1			
Safety Supervisor							1	1	1	1	1	1								1	1	1	1	1	1	1	1	1					
Safety Supervisor Nightshift																									1	1	1						
Safety EMT																1	1	1	1	1	1	1	1	1	1	1	1	1					
QA/QC Manager	1	1	1	1	1	1	1	1	1	1	1	1	1	1	1	1	1	1	1	1	1	1	1	1	1	1	1	1	1	1	1	1	
QA/QC Technician (Welding)							1	1	1	1	1	1								1	1	1	1	1	1	1	1	1	1				
QA/QC Technician (Civil)														1	1	1	1	1	1														
QA/QC Technician (Piping/Mech)																				1	1	1	1	1	1	1	1	1	1				
QA/QC Nightshift																									1	1	1						
Office Manager/Accountant	1	1	1	1	1	1	1	1	1	1	1	1	1	1	1	1	1	1	1	1	1	1	1	1	1	1	1	1	1	1	1	1	1
Accounting Clerk															1	1	1	1	1	1	1	1	1	1	1	1	1						
Clerks/Timekeepers	1	1	1	1	1	1	1	1	1	1	1	1	1		1	2	2	2	2	2	2	2	2	2	2	2	2	2	1	1	1	1	
IT Specialist														1	1	1	1	1	1	1	1	1	1	1	1	1	1	1	1				
Planners														1	1	1	1	1	1	1	1	1	1	1	1	1	1	1	1	1			
HR and Community relations															1	1	1	1	1	1	1	1	1	1	1	1	1						
Environmental Compliance Manager														1	1	1	1	1	1	1	1	1	1	1	1	1							
C/S/A Engineer														1	1	1	1	1	1	1	1	1											
Electrical Engineer																			1	1	1	1	1	1	1	1	1						
I&C Engineer																					1	1	1	1									
Mechanical/Pipe Engineer																			1	1	1	1	1	1	1	1	1						
Total Contractor Staff	**19**	**19**	**20**	**21**	**21**	**21**	**25**	**28**	**28**	**28**	**29**	**29**	**23**	**26**	**31**	**34**	**34**	**38**	**48**	**51**	**52**	**52**	**50**	**49**	**47**	**48**	**41**	**34**	**29**	**23**	**12**	**6**	**4**

Table 2.7-2
Expected Construction Deliveries

Equipment	Units	Loads Per Unit	Total Loads (rounded up)	Delivery Duration Months
Combustion turbines	4	191	764	4
Steam turbines	2	19	38	2
Heat recovery steam generators	2	110	220	12
Generator step-up transformers	6	6	36	4
Auxiliary power transformers	15	1	15	2
Electrical switchgear and cabinets	15	1	15	2
Switchyard steel	6	1	6	1
Bus duct 13.8-kV	6	1	6	2
Electrical conduit and wire	20	1	20	6
Electrical lighting equipment	3	1	3	2
General electrical materials	260	1	260	6
Natural gas compressors and coolers	2	4	8	1
Fuel gas conditioning	3	1	3	2
SCR module delivery	2	11	22	4
Exhaust transition and stack	2	6	12	4
Mechanical equipment (balance of plant pumps, equipment, FCC)	414	1	414	6
Balance of plant equipment	0	0	0	6
Piping, supports, and valves	550	1	550	6
Fire pump skid	1	1	1	1
Structural steel, platforms	20	1	20	4
Administrative and warehouse buildings	158	1	158	3
Water treatment equip and filters	5	1	5	2
Water storage tank	3	3	9	2
Earthwork (sand, gravel)	100	1	100	6
Structural fill (foundations)	100	1	100	6
Concrete (foundations)	1,125	1	1,125	8
Construction consumables	502	1	502	30
Office equipment and supplies	502	1	502	33
Site contractor mobilization and demobilization	20	1	20	2
General contractor mobilization and demobilization	10	1	10	2
Construction equipment delivery and pickup	60	1	60	18
Total			**5,004**	

Notes:
Construction Duration for Project is 33 Months.
Loads Per Month Average = 27.

Table 2.7-3
Average Construction Equipment On Site Per Month

Construction Equipment	Percent Usage	HP	Fuel (Diesel/Gas)	2009			2010												2011												2012					
				Oct	Nov	Dec	Jan	Feb	Mar	Apr	May	Jun	Jul	Aug	Sep	Oct	Nov	Dec	Jan	Feb	Mar	Apr	May	Jun	Jul	Aug	Sep	Oct	Nov	Dec	Jan	Feb	Mar	Apr	May	Jun
Demolition																																				
Hydraulic excavator	100%	250	Diesel	2	3	3	3	3	2	0	0	0	0	0	0	0	0	0	0	0	0	0	0	0	0	0	0	0	0	0	0	0	0	0	0	0
1-ton flatbed truck	100%	150	Gas	1	1	1	1	1	1	0	0	0	0	0	0	0	0	0	0	0	0	0	0	0	0	0	0	0	0	0	0	0	0	0	0	0
Forklift	100%	40	Gas	1	1	1	1	1	1	0	0	0	0	0	0	0	0	0	0	0	0	0	0	0	0	0	0	0	0	0	0	0	0	0	0	0
Fuel/lube truck	50%	150	Gas	1	1	1	1	1	1	0	0	0	0	0	0	0	0	0	0	0	0	0	0	0	0	0	0	0	0	0	0	0	0	0	0	0
Water truck	100%	300	Diesel	2	2	2	2	2	2	0	0	0	0	0	0	0	0	0	0	0	0	0	0	0	0	0	0	0	0	0	0	0	0	0	0	0
Articulating boom manlift (120, 80, 60, and 40 foot).	100%	75	Gas	2	2	2	2	2	2	0	0	0	0	0	0	0	0	0	0	0	0	0	0	0	0	0	0	0	0	0	0	0	0	0	0	0
Air compressor	100%	50	Gas	2	2	2	2	2	2	0	0	0	0	0	0	0	0	0	0	0	0	0	0	0	0	0	0	0	0	0	0	0	0	0	0	0
Hydraulic crane (75 ton)	50%	350	Diesel	1	1	1	1	1	1	0	0	0	0	0	0	0	0	0	0	0	0	0	0	0	0	0	0	0	0	0	0	0	0	0	0	0
Service truck	50%	150	Gas	1	1	1	1	1	1	0	0	0	0	0	0	0	0	0	0	0	0	0	0	0	0	0	0	0	0	0	0	0	0	0	0	0
Construction																																				
Pickup truck	75%	150	Gas	2	2	2	2	2	2	2	2	2	2	2	2	2	2	2	2	2	2	3	3	3	3	3	3	3	3	3	3	3	3	3	3	2
1 - ton flatbed truck	50%	150	Gas	0	0	0	0	0	0	0	0	0	0	0	0	0	0	0	0	0	0	0	0	0	0	0	0	0	0	0	0	0	0	0	0	0
Tractor	50%	195	Diesel	1	1	1	1	1	1	1	1	1	1	1	1	1	1	1	1	1	1	1	1	1	1	1	1	1	1	1	1	1	1	1	1	1
Forklift	75%	40	Gas	1	1	1	1	2	2	2	3	2	2	1	1	1	1	1	1	1	1	1	1	1	1	2	2	2	2	2	2	3	3	3	3	2
Fuel/lube truck	25%	150	Gas	1	1	1	1	1	1	1	1	1	1	1	1	1	1	1	1			1	1	1	1	1	1	1	1	1	1	1	1	1	1	1
M2250 ringer crane/M2250 crawler crane	25%	500	Diesel	0	0	0	0		1	1	1	0	0	0	0	0	0	0	0	0	0	0	0	0	0	0	0	0	0	1	1	1	1	1	1	0
150 ton crawler crane	50%	300	Diesel	1	1	1	0	1	1	1	1	1	1	1	1	1	0	0	0	0	0	0	0	0	0	0	0	0	0	1	1	1	1	1	1	1
Hydraulic crane (55 ton)	65%	300	Diesel	1	1	1	1	1	2	2	1	1	1	1	1	1	1	1	0	0	0	1	1	1	1	1	1	1	1	1	1	1	2	2	2	2
Hydraulic crane (45 ton)	65%	250	Diesel	1	1	1	1	1	1	1	1	1	1	1	1	1	1	1	1	1	1	0	0	0	0	0	0	0	0	1	1	1	1	1	1	1
Articulating boom manlift (120, 80, 60 and 40 foot).	70%	75	Gas	0	0	0	0	0	4	4	6	6	12	12	10	10	10	12	12	6	4	0	0	0	0		1	3	5	9	9	9	9	12	12	12
Air compressor	80%	50	Gas	1	1	1	1	1	2	2	2	1	1	1	1	1	1	1	1	0	0	1	1	1	1	1	1	1	1	1	1	2	2	2	2	2
Backhoe loader	40%	80	Diesel	0	0	2	2	2	2	2	1	1	1	1	1	0	0	0	0	0	0	1	1	1	1	1	1	1	1	1	1	1	1	1	1	1
Front end loader	70%	130	Diesel	0	1	1	1	1	1	1	1	1	1	1	1	1	0	0	0	0	0	1	2	2	2	2	2	2	2	2	2	2	2	0	0	0
Dump truck (30 ton)	100%	300	Diesel	0	0	0	0	0	0	10	0	0	0	0	0	0	0	0	0	0	0	0	0	0	0	0	0	0	0	0	0	0	0	0	0	0
Hydraulic excavator	85%	250	Diesel	0	0	2	2	2	2	3	1	1	1	1	1	0	0	0	0	0	0	1	1	2	2	2	2	2	2	2	2	1	1	0	0	0
Bull dozer	80%	300	Diesel	0	0	0	0	0	0	0	0	0	0	0	0	0	0	0	0	0	0	0	1	1	1	1	1	1	0	0	0	0	0	0	0	0
Bull dozer w/ ripper	80%	300	Diesel	0	0	0	0	0	0	1	0	0	0	0	0	0	0	0	0	0	0	0	0	0	0	0	0	0	0	0	0	0	0	0	0	0
Vibratory roller	80%	125	Gas	0	0	1	1	1	1	0	0	0	0	0	0	0	0	0	0	0	0	0	1	1	1	1	1	1	1	1	1	1	1	0	0	0
Walk behind vibratory roller	60%	25	Gas	0	0	1	1	1	1	0	0	0	0	0	0	0	0	0	0	0	0		1	1	2	2	2	2	2	1	1	1	1	0	0	0
Dump truck	35%	300	Diesel	0	0	1	1	1	1	0	0	0	0	0	0	0	0	0	0	0	0	1	2	2	2	2	2	2	2	1	1	1	1	0	0	0
Motor grader	80%	200	Diesel	0	0	0	0	0	0	0	0	0	0	0	0	0	0	0	0	0	0	0	0	0	0	0	0	0	0	0	0	0	0	0	0	0
Jumping jack compactors	60%	7.5	Gas	0	0	0	0	0	0	0	0	0	0	0	0	0	0	0	0	0	0	0	1	1	2	2	2	2	2	2	2	2	2	0	0	0
Vibratory plate compactor	60%	7.5	Gas	0	0	0	0	0	0	0	0	0	0	0	0	0	0	0	0	0	0	0	0	0	0	0	0	0	0	0	0	0	0	0	0	0
Water truck	50%	300	Diesel	1	1	1	1	1	1	0	0	0	0	0	0	0	0	0	0	0	0	1	1	1	1	1	1	1	1	1	1	1	1	1	1	1
Concrete pumper truck	15%	350	Diesel	0	0	1	1	1	1	0	0	0	0	0	0	0	0	0	0	0	0	1	1	1	1	1	1	1	1	1	1	0	0	0	0	0
Welder (diesel)	70%	25	Diesel	2	2	2	1	1	1	1	1	2	2	2	2	2	2	2	1	1	1	1	1	1	1	1	1	1	1	1	1	1	2	2	2	2
Light plant	30%	25	Gas		1	1	1	1	0	0	0	0	0	0	0	0	1	1	1	1	0	0	0	0	0	0	0	0	0	0	0	0	0	0	0	0
			Total	**26**	**30**	**39**	**38**	**41**	**47**	**35**	**23**	**21**	**27**	**26**	**24**	**22**	**21**	**23**	**21**	**13**	**10**	**15**	**21**	**22**	**24**	**25**	**26**	**28**	**29**	**34**	**34**	**34**	**36**	**31**	**31**	**28**

Table 2.7-4
Construction Water Requirements

Construction Month		Gallons
October 2009	1	98,000
November 2009	2	109,000
December 2009	3	115,000
January 2010	4	118,000
February 2010	5	115,000
March 2010	6	114,000
April 2010	7	115,000
May 2010	8	120,000
June 2010	9	124,000
July 2010	10	129,000
August 2010	11	139,000
September 2010	12	150,000
October 2010	13	199,000
November 2010	14	199,000
December 2010	15	199,000
January 2011	16	151,000
February 2011	17	1,304,000
March 2011	18	160,000
April 2011	19	1,323,000
May 2011	20	169,000
June 2011	21	174,000
July 2011	22	165,000
August 2011	23	168,000
September 2011	24	155,000
October 2011	25	146,000
November 2011	26	139,000
December 2011	27	137,000
January 2012	28	123,000
February 2012	29	1,115,000
March 2012	30	108,000
April 2012	31	1,100,000
May 2012	32	96,000
June 2012	33	98,000
	Total (gallons)	8,875,540
	Total (acre-feet)	27
	Average Monthly (gallons)	269,000
	Average Daily (gallons)	8,800

Note:
Months 15 – 21, 29 and 31 include water for hydrotesting, flushing and steam blow purposes

Table 2.8-1
Plant Operation Workforce

Department	Personnel	Shift	Workdays
Operations	8 Plant Operators	Rotating 12-hour shift, 2 employees per shift	7 days a week
Production	2 Operations Specialist 1 Operations Supervisor	Standard 8-hour days	5 days a week with additional coverage as required.
Administration	1 Plant Manager 1 Administrative Assistant 1 Plant Engineer 1 Planner/Scheduler	Standard 8-hour days	5 days a week with additional coverage as required.
Maintenance	1 Maintenance Supervisor 2 I&C Technicians 1 Electrician 1 Mechanic	Standard 8-hour days	5 days a week with additional coverage as required.
Total	20 Personnel		

Note:
I&C = instrumentation and control

Table 2.9-1 Major Equipment Redundancy for One Flex Plant 10 Combined Cycle Unit		
Description	**Number**	**Notes**
CTG, HRSG, and CTG Main Transformer	One train	A bypass system is provided around the STG to allow the CTG/HRSG train to operate at full load.
STG	One	Refer to note related to CTG/HRSG trains.
STG Main Transformer	One	Refer to note related to CTG/HRSG trains.
Boiler Feedwater Pump	Two at 100 percent	One boiler feedwater pump can be down and the plant will be able to operate at full load.
Condensate Pump	Two at 100 percent	One condensate pump can be down and the plant will be able to operate at full load.
Auxiliary Transformer	One	One tied to the output of each CTG. One transformer can be down and the plant will be able to operate at full load.
Air Compressors	Two at 100 percent	One air compressor can be down and the plant will be able to operate at full load.
Notes: CTG = combustion turbine generator HRSG = heat recovery steam generator STG = steam turbine generator		

Table 2.9-2 Major Equipment Redundancy for One Simple Cycle Units		
CTG Main Transformer	One	One per CTG. If one transformer is down, the associated CTG will be unavailable
Auxiliary Transformer	One	One tied to the output of each CTG. One transformer can be down and the plant will be able to operate at full load.
Tempering Air Fans for SCR	Two	Two 100 percent fans per Unit

Table 2.9-3
List of Potential LEED-NC Credits Applicable to the MLGS
(Page 1 of 6)

LEED Credit	LEED Credit Name	LEED Credit Description
Sustainable Sites		
Prereq 1	Construction Activity Pollution Prevention	Create and implement an Erosion and Sedimentation Control Plan
Credit 3	Brownfield Redevelopment	Develop on a site defined as a brownfield by a local, state or federal government agency
Credit 4.2	Alternative Transportation: Bicycle Storage and Changing Rooms	Provide secure bicycle racks and/or storage (within 200 yards of a building entrance) for 5% or more of all building users (measured at peak periods), and, provide shower and changing facilities in the building for 0.5% of occupants.
Credit 4.3	Alternative Transportation: Low Emitting and Fuel Efficient Vehicles	Provide preferred parking for low-emitting and fuel-efficient vehicles for 5% of the total vehicle parking capacity of the site.
Credit 4.4	Alternative Transportation: Parking Capacity	Size parking capacity to not exceed minimum local zoning requirements and provide preferred parking for carpools or vanpools for 5% of the total provided parking spaces
Credit 6.1	Stormwater Management: Quantity Control	Implement a stormwater management plan that results in a 25% decrease in the volume of stormwater runoff from the two-year, 24-hour design storm.
Credit 7.2	Heat Island Effect: Roof	Use roofing materials having a Solar Reflectance Index (SRI) equal to or greater than the values in the table below for a minimum of 75% of the roof surface.
Credit 8	Light Pollution Reduction	Minimize light trespass from the building and site, reduce sky-glow to increase night sky access, improve nighttime visibility through glare reduction, and reduce development impact on nocturnal environments

Table 2.9-3
List of Potential LEED-NC Credits Applicable to the Marsh Landing Generating Station
(Page 2 of 6)

LEED Credit	LEED Credit Name	LEED Credit Description
Water Efficiency		
Credit 1.2	Water Efficient Landscaping: No Potable Use or No Irrigation	Achieve credit 1.1 and install landscaping that does not require permanent irrigation systems.
Credit 3.1	Water Use Reduction: 20%	Employ strategies that in aggregate use 20% less water than the water use baseline calculated for the building (not including irrigation) after meeting the Energy Policy Act of 1992 fixture performance requirements.
Energy and Atmosphere		
Prereq 1	Fundamental Commissioning of the Building Energy System	Verify that the building's energy related systems are installed, calibrated and perform according to the owner's project requirements, basis of design, and construction documents.
Prereq 2	Minimum Energy Performance	Establish the minimum level of energy efficiency for the building and systems.
Prereq 3	Fundamental Refrigerant Management	Zero use of CFC-based refrigerants in new base building HVAC&R systems.
Credit 1.1b	Optimize Energy Performance: Option 1 – Whole Bldg Sim. 21% New/14% Existing	Demonstrated a percentage improvement in the proposed building performance rating compared to the baseline building performance rating per ASHRAE/IESNA Standard 90.1-2004 by a whole building project simulation.
Credit 3	Enhanced Commissioning	Begin the commissioning process early during the design process and execute additional activities after systems performance verification is completed.
Credit 5	Measurement and Verification	Provide for the ongoing accountability of building energy consumption over time.

Table 2.9-3
List of Potential LEED-NC Credits Applicable to the Marsh Landing Generating Station
(Page 3 of 6)

LEED Credit	LEED Credit Name	LEED Credit Description
Materials and Resources		
Prereq 1	Storage and Collection of Recyclables	Provide an easily accessible area that serves the entire building and is dedicated to the collection and storage of non-hazardous materials for recycling, including (at a minimum) paper, corrugated cardboard, glass, plastics and metals.
Credit 2.2	Construction Waste Management: Divert 75% from Disposal	Recycle and/or salvage 75% of non-hazardous construction and demolition debris.
Credit 4.2	Recycled Content: 20% (post-consumer + ½ pre-consumer)	Use materials with recycled content such that the sum of post-consumer recycled content plus one-half of the pre-consumer content constitutes 20% of the total value of the materials in the project.
Credit 5.1	Regional Materials: 10% Extracted, Processed and Manufactured Regionally	Use building materials or products that have been extracted, harvested or recovered, as well as manufactured, within 500 miles of the project site for a minimum of 10% (based on cost) of the total materials values.
Credit 7	Certified Wood	Use a minimum of 50% of wood-based materials and products which are certified in accordance with the Forest Stewardship Council's (FSC) Principles and Criteria, for wood building components.
Prereq 1	Minimum IAQ Performance	Establish minimum indoor air quality (IAQ) performance to enhance indoor air quality in buildings, thus contributing to the comfort and well-being of the occupants.

Table 2.9-3
List of Potential LEED-NC Credits Applicable to the Marsh Landing Generating Station
(Page 4 of 6)

LEED Credit	LEED Credit Name	LEED Credit Description
Indoor Environmental Quality		
Prereq 2	Environmental Tobacco Smoke (ETS) Control	Minimize exposure of building occupants, indoor surfaces, and ventilation air distribution systems to Environmental Tobacco Smoke.
Credit 1	Outdoor Air Delivery Monitoring	Install permanent monitoring systems that provide feedback on ventilation system performance to ensure that ventilation systems maintain design minimum ventilation requirements.
Credit 2	Increase Ventilation	Provide additional outdoor air ventilation to improve indoor air quality for improved occupant comfort, well-being and productivity.
Credit 3.1	Construction IAQ Management Plan: During Construction	Reduce indoor air quality problems resulting from the construction/renovation process in order to help sustain the comfort and well-being of construction workers and building occupants.
Credit 3.2	Construction IAQ Management Plan: Before Occupancy	Reduce indoor air quality problems resulting from the construction/renovation process in order to help sustain the comfort and well-being of construction workers and building occupants.
Credit 4.1	Low-Emitting Materials: Adhesives and Sealants	Reduce the quantity of indoor air contaminants that are odorous, irritating and/or harmful to the comfort and well-being of installers and occupants
Credit 4.2	Low-Emitting Materials: Paints and Coatings	Reduce the quantity of indoor air contaminants that are odorous, irritating and/or harmful to the comfort and well-being of installers and occupants

Table 2.9-3
List of Potential LEED-NC Credits Applicable to the Marsh Landing Generating Station
(Page 5 of 6)

LEED Credit	LEED Credit Name	LEED Credit Description
Credit 4.3	Low-Emitting Materials: Carpet Systems	Reduce the quantity of indoor air contaminants that are odorous, irritating and/or harmful to the comfort and well-being of installers and occupants
Credit 5	Indoor Chemical and Pollutant Source Control	Minimize exposure of building occupants to potentially hazardous particulates and chemical pollutants.
Credit 6.1	Controllability of Systems: Lighting	Provide individual lighting controls for 90% (minimum) of the building occupants to enable adjustments to suit individual task needs and preferences and provide lighting system controllability for all shared multi-occupant spaces.
Credit 6.2	Controllability of Systems: Thermal Comfort	Provide individual comfort controls for 50% (minimum) of the building occupants to enable adjustments to suite individual task needs and preferences and provide comfort system controls for all shared multi-occupant spaces.
Credit 7.1	Thermal Comfort: Design	Provide a comfortable thermal environment that supports the productivity and well-being of building occupants.
Credit 7.2	Thermal Comfort: Verification	Provide for the assessment of building thermal comfort over time.
Credit 8.1	Daylight and Views: Daylight: 75% of Spaces	Provide for the building occupants a connection between indoor spaces and the outdoors through the introduction of daylight and views into the regularly occupied areas of the building.
Credit 8.2	Daylight and Views: Views: 90% of Spaces	Provide for the building occupants a connection between indoor spaces and the outdoors through the introduction of daylight and views into the regularly occupied areas of the building.

Table 2.9-3
List of Potential LEED-NC Credits Applicable to the Marsh Landing Generating Station
(Page 6 of 6)

LEED Credit	LEED Credit Name	LEED Credit Description
Innovation and Design Process		
Credit 1.1	Innovation in Design: Green Education	Provide the building occupants with an understanding of the green features in the building and how to use them correctly.
Credit 2	LEED Accredited Professional	At least one principal participant of the project team shall be a LEED Accredited Professional (AP).

Table 2.10-1
Applicable Laws, Ordinances, Regulations, and Standards
(Page 1 of 7)

Engineering Activity	Laws, Ordinances, Regulations, and Standards	Administering Agency	Applicability/Compliance	AFC Section
Federal				
Engineering Geology	Occupational Safety and Health Act, 29 United States Code (USC) §651 et seq.; 29 Code of Federal Regulations (CFR) §§1901.1-1910, 1500, 29 CFR, Part 1926	Federal Occupational Safety and Health Administration (OSHA); Cal OSHA (per 29 CFR §1952.70-1952.175)	Specific occupational safety and health standards. Mirant will meet all standards.	Appendix A, Civil Engineering Design Criteria; Appendix B, Structural Engineering Design Criteria; Section 7.7, Worker Safety and Health
Engineering Geology	Clean Water Act (CWA), 33 USC §1342 et seq.	Regional Water Quality Control Board (RWQCB)	Requires permits for specified discharges into waters of the United States. Mirant will provide notice of intent to RWQCB to operate under and will comply with all General Industrial Activity Storm Water Permit requirements.	Appendices A and B; Section 7.14, Water Resources
State				
Engineering Geology	Business and Professions Code §6700 et seq.; 6730, 6736	Board of Professional Engineers and Land Surveyors	Requires state registration to practice as a civil or structural engineer in California and that all plans, specifications, reports, or documents be prepared by or under the direction of a registered engineer. Mirant will comply with all requirements.	Appendices A and B; Section 7.15, Geologic Hazards and Resources
Engineering Geology	California Occupational Safety and Health Act, Labor Code §6500 et seq.	California Occupational Safety and Health Administration (Cal OSHA)	Requires a permit for construction of trenches or excavation 5 feet or deeper into which personnel have to descend.	Appendices A and B; Section 7.7, Worker Safety and Health

Sample Table 2.10-1
Applicable Laws, Ordinances, Regulations, and Standards
(Page 2 of 7)

Engineering Activity	Laws, Ordinances, Regulations, and Standards	Administering Agency	Applicability/Compliance	AFC Section
Engineering Geology	California Building Code (CBC) (latest edition available)	CEC	Sets building standards and requirements. Mirant will comply with all CBC requirements.	Appendices A and B; Section 7.15, Geologic Hazards and Resources
Engineering Geology	Labor Code §6300 et seq.; 8 CCR 1500 et seq.; 2300 et seq., §3200 et seq.	Cal OSHA	Prescribes construction safety orders, industrial safety orders, and work safety requirements. Mirant will comply with all safety requirements.	Appendices A and B; Section 7.7, Worker Safety and Health
Engineering Geology	Vehicle Code §35780 et seq.	California Department of Transportation (Caltrans)	Requires a permit for transportation of oversize or overweight vehicles over state highways. Mirant will obtain all necessary permits.	Section 7.10, Traffic and Transportation
Local				
Engineering Geology	Code of Building Regulations	Contra Costa County	Sets building standards and requirements.	Appendices A and B; Section 7.15, Geologic Hazards and Resources
Federal				
Civil and Structural Engineering	29 USC §651 et seq.; 29 CFR §§1901.1-1910, 1500; 29 CFR, Part 1926.	OSHA; Cal OSHA (per 29 CFR §§1952.70-1952.175)	Specific occupational safety and health standards. Mirant will meet all standards.	Appendices A and B; Section 7.7, Worker Safety and Health
Civil and Structural Engineering	33 USC §1342 et seq.	RWQCB	Requires permits for specified discharges into waters of the United States. Mirant will provide notice of intent to RWQCB to operate under and will comply with all General Industrial Activity Storm Water Permit requirements.	Section 7.14, Water Resources

Table 2.10-1
Applicable Laws, Ordinances, Regulations, and Standards
(Page 3 of 7)

Engineering Activity	Laws, Ordinances, Regulations, and Standards	Administering Agency	Applicability/Compliance	AFC Section
State				
Civil and Structural Engineering	Business and Professions Code §6700 et seq.; §§6730, 6736	Board for Professional Engineers and Land Surveyors	Requires state registration to practice as a civil or structural engineer in California and that all plans, specifications, reports, or documents be prepared by or under the direction of a registered engineer. Mirant will comply with all requirements.	Appendices A and B
Civil and Structural Engineering	Labor Code §6500 et seq.	Cal OSHA	Requires a permit for construction of trenches or excavation 5 feet or deeper into which personnel have to descend.	Appendices A and B; Section 7.7, Worker Safety and Health
Civil and Structural Engineering	California Building Code (CBC)	CEC	Sets building standards and requirements. Mirant will comply with all CBC requirements.	Appendices A and B; Section 7.7, Worker Safety and Health
Civil and Structural Engineering	Labor Code §6300 et seq.; 8 CCR 1500 et seq.; 2300 et seq.; §3200 et seq.	Cal OSHA	Prescribes construction safety orders, industrial safety orders, and work safety requirements. Mirant will comply with all safety requirements.	Appendices A and B; Section 7.7, Worker Safety and Health
Civil and Structural Engineering	Vehicle Code §35780 et seq.	Caltrans	Requires a permit for transportation of oversize or overweight vehicles over state highways. Mirant will obtain all necessary permits.	Section 7.10, Traffic and Transportation

Table 2.10-1
Applicable Laws, Ordinances, Regulations, and Standards
(Page 4 of 7)

Engineering Activity	Laws, Ordinances, Regulations, and Standards	Administering Agency	Applicability/Compliance	AFC Section
Local				
Civil and Structural Engineering	Code of Building Regulations	Contra Costa County	Sets building standards and requirements for County.	Appendices A and B; Section 7.15, Geologic Hazards and Resources
Civil and Structural Engineering	Hydrology Manual	County Flood Control District	Specifies drainage requirements. Mirant will comply with all drainage requirements.	Appendices A and B; Section 7.14, Water Resources
Federal				
Mechanical Engineering	29 USC §651 et seq.; 29 CFR §§1901.1-1910, 1500; 29 CFR, Part 1926.	Federal OSHA; Cal OSHA (per 29 CFR §§1952.70-1952.175)	Specific occupational safety and health standards. Mirant will meet all standards.	Appendix C; Section 7.7, Worker Safety and Health
State				
Mechanical Engineering	CBC, California Plumbing Code	CEC	Sets building standards and requirements. Mirant will comply with all CBC requirements.	Appendix C; Section 7.15, Geologic Hazards and Resources
Mechanical Engineering	Labor Code §6500 et seq.; 8 CCR 1500 et seq.; 2300 et seq.; §3200 et seq.	Cal OSHA	Prescribes construction safety orders, industrial safety orders, and work safety requirements. Mirant will comply with all safety requirements.	Appendix C; Section 7.7, Worker Safety and Health
Mechanical Engineering	8 CCR Chapters 4-7	CEC	Prescribes requirements for flammable liquids, gases, and vapors. Mirant will comply with all requirements.	Appendix C; Section 7.12, Hazardous Materials Handling

Table 2.10-1
Applicable Laws, Ordinances, Regulations, and Standards
(Page 5 of 7)

Engineering Activity	Laws, Ordinances, Regulations, and Standards	Administering Agency	Applicability/Compliance	AFC Section
Mechanical Engineering	Business and Professions Code §6700 et seq., 6730, 6735 and 6736	Board of Professional Engineers and Land Surveyors	Requires state registration to practice as a mechanical engineer and that all plans, specifications, reports, or documents be prepared by a registered engineer. Mirant will use registered engineers.	Appendix C
Federal				
Electrical Engineering	29 USC §651 et seq.; 29 CFR §§1901.1-1910, 1500, 29 CFR, Part 1926	Federal OSHA; Cal OSHA (per 29 CFR §§1952.70-1952.175)	Specific occupational safety and health standards. Mirant will meet all standards.	Appendix D; Section 7.7, Worker Safety and Health
State				
Electrical Engineering	CBC, California Electrical Code	CEC	Sets building standards and requirements. Mirant will comply with all CBC requirements.	Appendix D; Section 7.15, Geologic Hazards and Resources
Electrical Engineering	Labor Code §6500 et seq.; 8 CCR 1500 et seq.; 2300 et seq.; §3200 et seq.	Cal OSHA	Prescribes construction safety orders, industrial safety orders, and work safety requirements. Mirant will comply with all safety requirements.	Appendix D; Section 7.7, Worker Safety and Health
Electrical Engineering	8 CCR Chapters 4-7	CEC	Prescribes requirements for flammable liquids, gases, and vapors. Mirant will comply with all requirements.	Appendix D; Section 7.12, Hazardous Materials Handling
Electrical Engineering	Business and Professions Code §6700 et seq., 6730, 6735 and 6736	Board of Professional Engineers and Land Surveyors	Requires state registration to practice as an electrical engineer and also requires all plans, specifications, reports, or documents be prepared by a registered engineer. Mirant will use registered engineers.	Appendix D

Table 2.10-1
Applicable Laws, Ordinances, Regulations, and Standards
(Page 6 of 7)

Engineering Activity	Laws, Ordinances, Regulations, and Standards	Administering Agency	Applicability/Compliance	AFC Section
Local				
Electrical Engineering	Code of Building Regulations	Contra Costa County Department of Building	Sets building standards and requirements for County.	Appendix D; Section 7.15, Geologic Hazards and Resources
Industry				
Power Plant Reliability	EPRI, NERC		EPRI and NERC trade association standards will be followed	Appendix D; Section 2.9, Safety and Reliability
Federal				
Public Health/Worker Safety Protection	OSHA, 29 USC §651 et seq.; 29 CFR 1910 et seq.; and 29 CFR 1926 et seq.	Federal OSHA and Cal OSHA	Project will meet employee health and safety standards for employer-employee communications, electrical operations, and chemical exposures.	Section 7.7.7, Worker Safety
Public Health/Worker Safety Protection	Department of Labor, Safety and Health Regulations for Construction promulgated under Section 333 of the Contract Work Hours and Safety Standards Act, 40 USC 327 et seq.	Federal OSHA and Cal OSHA	Project will meet employee health and safety standards for construction activities. Requirements addressed by CCR Title 8, General Construction Safety Orders.	Section 7.7.7, Worker Safety
Federal				
Transmission Engineering	47 USC §15.25	Federal Aviation Administration	The project will not to cause communication interference	Section 2.9.2, Section 2.9.4.4 and Section 4.3
State				
Transmission System Engineering	General Order 52 (GO-52)	CPUC	The project will not cause inductive interference	Section 2.9.2, Section 2.9.4.4 and Section 4.3

Table 2.10-1
Applicable Laws, Ordinances, Regulations, and Standards
(Page 7 of 7)

Engineering Activity	Laws, Ordinances, Regulations, and Standards	Administering Agency	Applicability/Compliance	AFC Section
Transmission System Engineering	General Order 95 (GO-95)	CPUC	Establishes rules and guidelines for transmission line construction. The MLGS transmission line clearances, grounding techniques, maintenance and inspection requirements will be provided in accordance with the GO-95 requirements.	Section 2.9.2 and Section 2.9.4.4
Transmission System Engineering	California Code of Regulations Section 2700	CEC	Establishes essential requirement and minimum standards for installation, operation and maintenance of electrical equipment to provide practical safety and freedom from danger. The project will be constructed in conformance with these regulations.	Section 2.9.2.4

CEC = California Energy Commission

CalOSHA = California Occupational Safety and Health Administration

Table 2.11-1
Involved Agencies and Agency Contacts

Issue	Agency	Contact/Title	Telephone
Air Emissions	Bay Area Air Pollution Control District 939 Ellis Street San Francisco, CA 94109	Brian Bateman Director of Engineering Division	(415)749-4653
Water Treatment	Delta Diablo Sanitation District 2500 Pittsburg-Antioch Highway Antioch, CA 94509-1373	Darrell Cain Laboratory Director	(925) 756-1915
Water Conveyance	City of Antioch Third and H Streets Antioch, CA 94531-5007	Ken Warren Assistant Engineer	(925) 779-7035
Building Permits	City of Antioch, Building Division Third and H Streets 2nd Floor of City Hall Antioch, CA 94531-5007	Donald Griebling Chief Building Official	(925) 779-7065
Building Permits	Contra Costa County, Building Inspection Department 651 Pine Street 3rd Floor, North Wing Martinez, CA 94553	Carlos Baltodano Director	(625) 335-1108

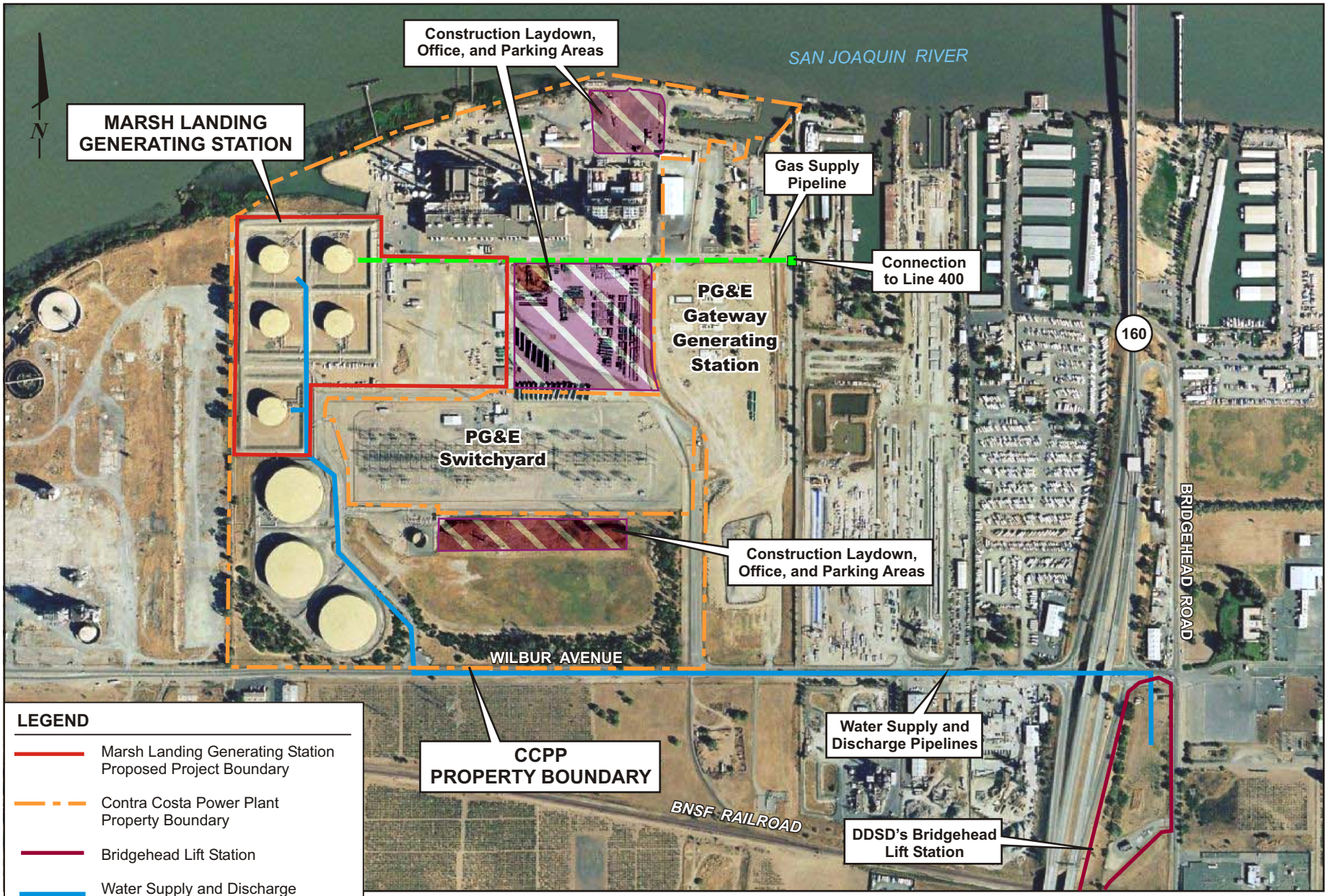

LEGEND

- Marsh Landing Generating Station Proposed Project Boundary
- Contra Costa Power Plant Property Boundary
- Bridgehead Lift Station
- Water Supply and Discharge Pipelines
- Gas Supply Pipeline
- Construction Laydown, Office, and Parking Areas

Source of Aerial:
Google Earth 2006

0 500 1000
Approximate Scale in Feet

SITE PLAN

May 2008
28067344

Marsh Landing Generating Station
Mirant Marsh Landing, LLC
Contra Costa County, California

URS

FIGURE 2.1-1

5/21/08 vsa ..T:\Mirant Contra Costa-Marsh Landing\Graphics\2.0 Facility Description\2.1-1_site plan.cdr

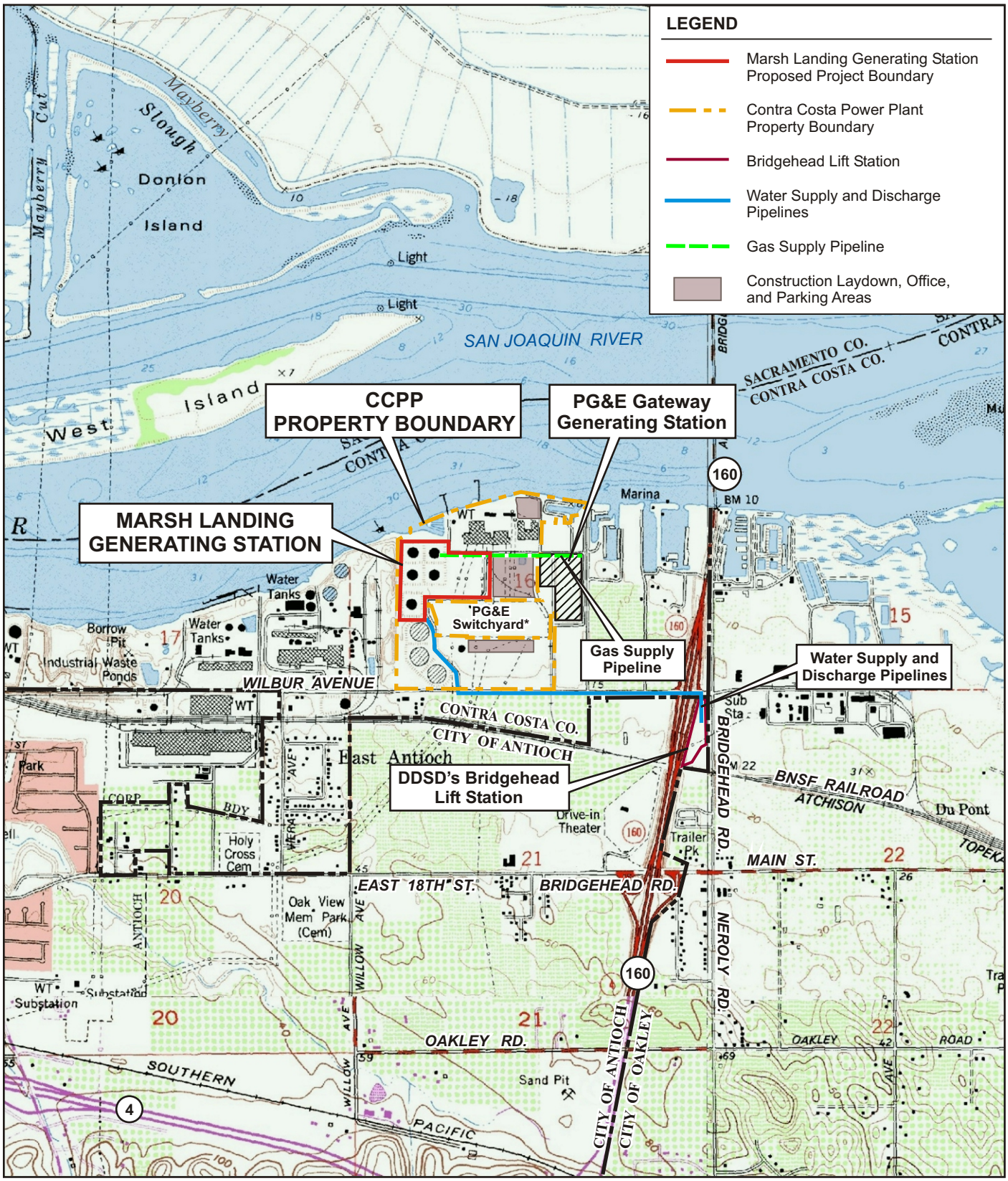

Source:
USGS Topographic Maps, 7.5 Minute Series:
Antioch North, California, 1978
Antioch South, California, 1980
Jersey Island, California, 1978
Brentwood, California, 1978

* The PG&E Switchyard and PG&E Gateway Project are not part of the Mirant Property.

0 2000 4000
Scale in Feet
1:24,000

N

PROJECT LOCATION MAP

Marsh Landing Generating Station
Mirant Marsh Landing, LLC
Contra Costa County, California

May 2008
28067344

URS

FIGURE 2.2-1

5/21/08 vsa ..T:\Mirant Contra Costa-Marsh Landing\Graphics\2.0 Facility Description\2.2-1_proj loc map.cdr

Source of Aerial:
Google Earth 2008

LEGEND

- Approximate Parcel Property Line
- Water Supply and Discharge Pipelines

N

0 400 800

Approximate Scale in Feet

SITE PLAN – BRIDGEHEAD LIFT STATION

Marsh Landing Generating Station
Mirant Marsh Landing, LLC
Contra Costa County, California

May 2008
28067344

URS

FIGURE 2.3-1

5/19/08 vsa ..T:\Mirant Contra Costa-Marsh Landing\Graphics\2.0 Facility Description\2.3-1_bridgehead.cdr

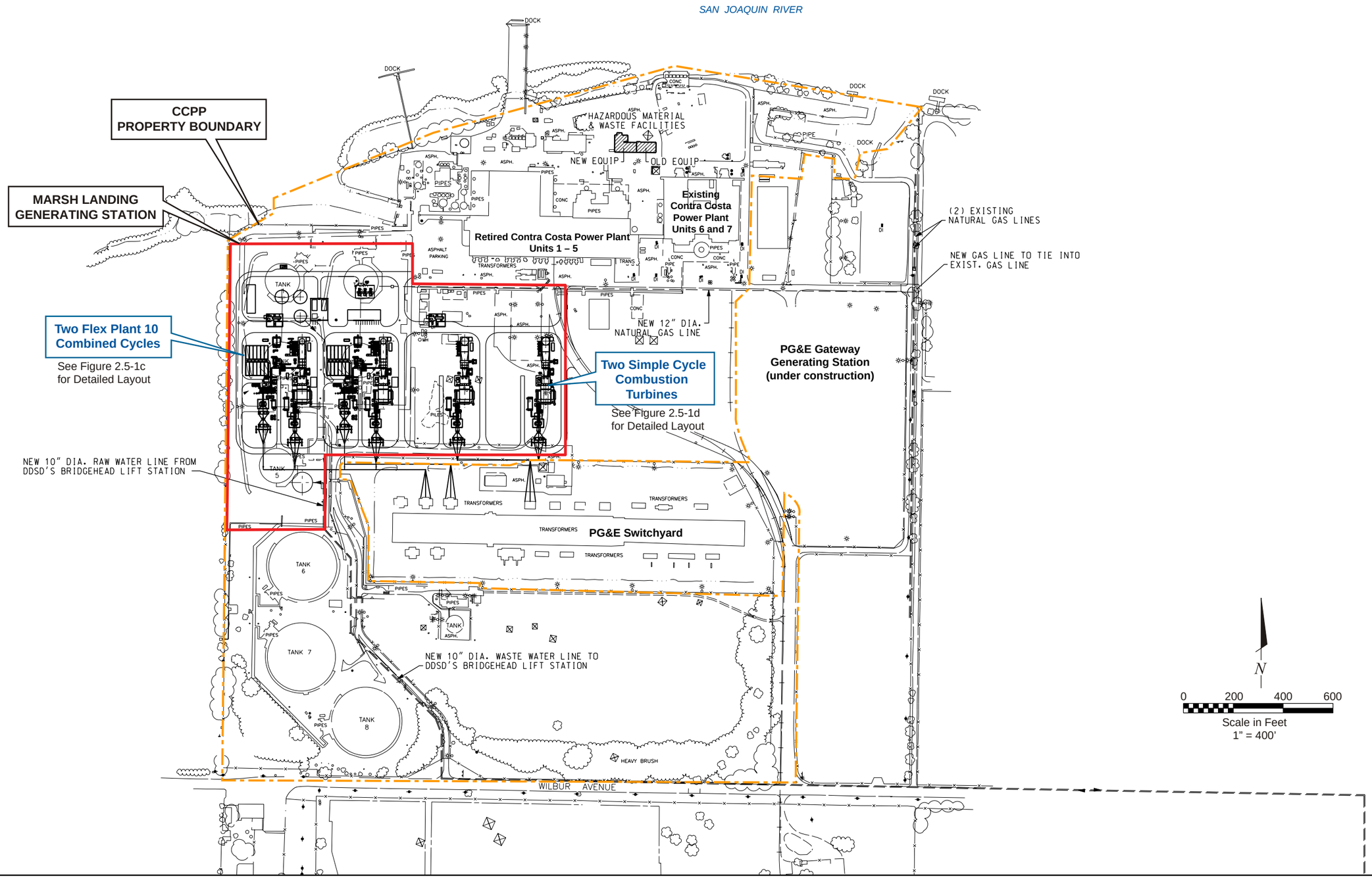

Source:
CH2MHill Lockwood Greene; General Arrangement Marsh Landing Generating Station, Combined Cycle Siemens Flex 10s & Simple Cycle Layout; Drawing No: MR-GA-ML-01-10 (Rev. C, 04/18/08)

GENERAL PLOT PLAN

Marsh Landing Generating Station
Mirant Marsh Landing, LLC
Contra Costa County, California

May 2008
28067344

URS

FIGURE 2.5-1a

5/21/08 vsa ..\T:\Mirant Contra Costa-Marsh Landing\Graphics\2.0 Facility Description\2.5-1a_plotplan_MLGS.ai

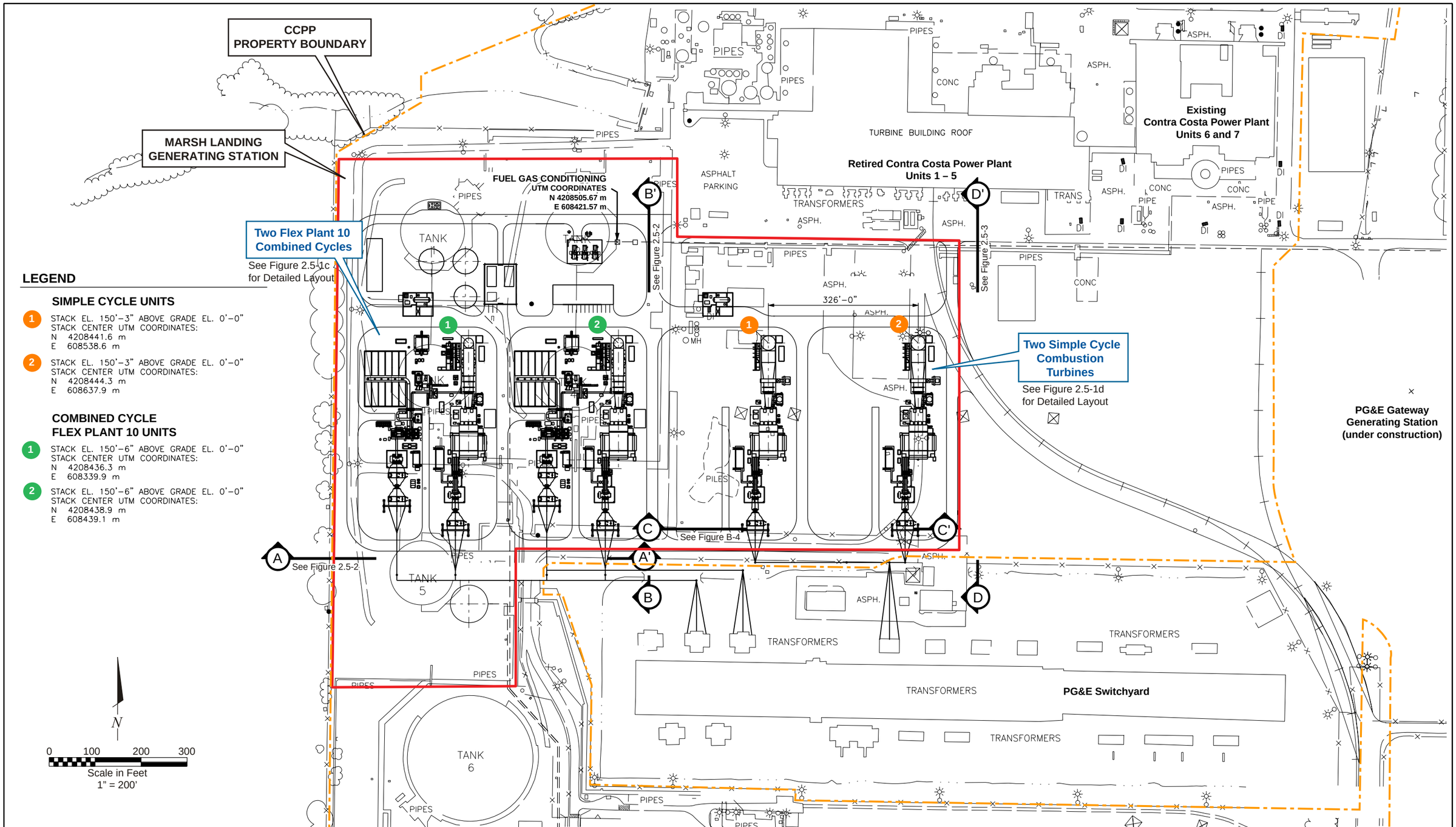

Source:
CH2MHill Lockwood Greene; General Arrangement Marsh Landing Generating Station, Combined Cycle Siemens Flex 10s & Simple Cycle Layout;
Drawing No: MR-GA-ML-01-12 (Rev. D, 06/04/08)

PLOT PLAN – MARSH LANDING GENERATING STATION

Marsh Landing Generating Station
Mirant Marsh Landing, LLC
Contra Costa County, California

July 2008
28067344

URS

REPLACEMENT FIGURE 2.5-1b

6/26/08 vsa ..\T:\Mirant Contra Costa-Marsh Landing\Graphics\Data Adequacy Supplement\REP_2.5-1b_plotplan_MLGS.ai

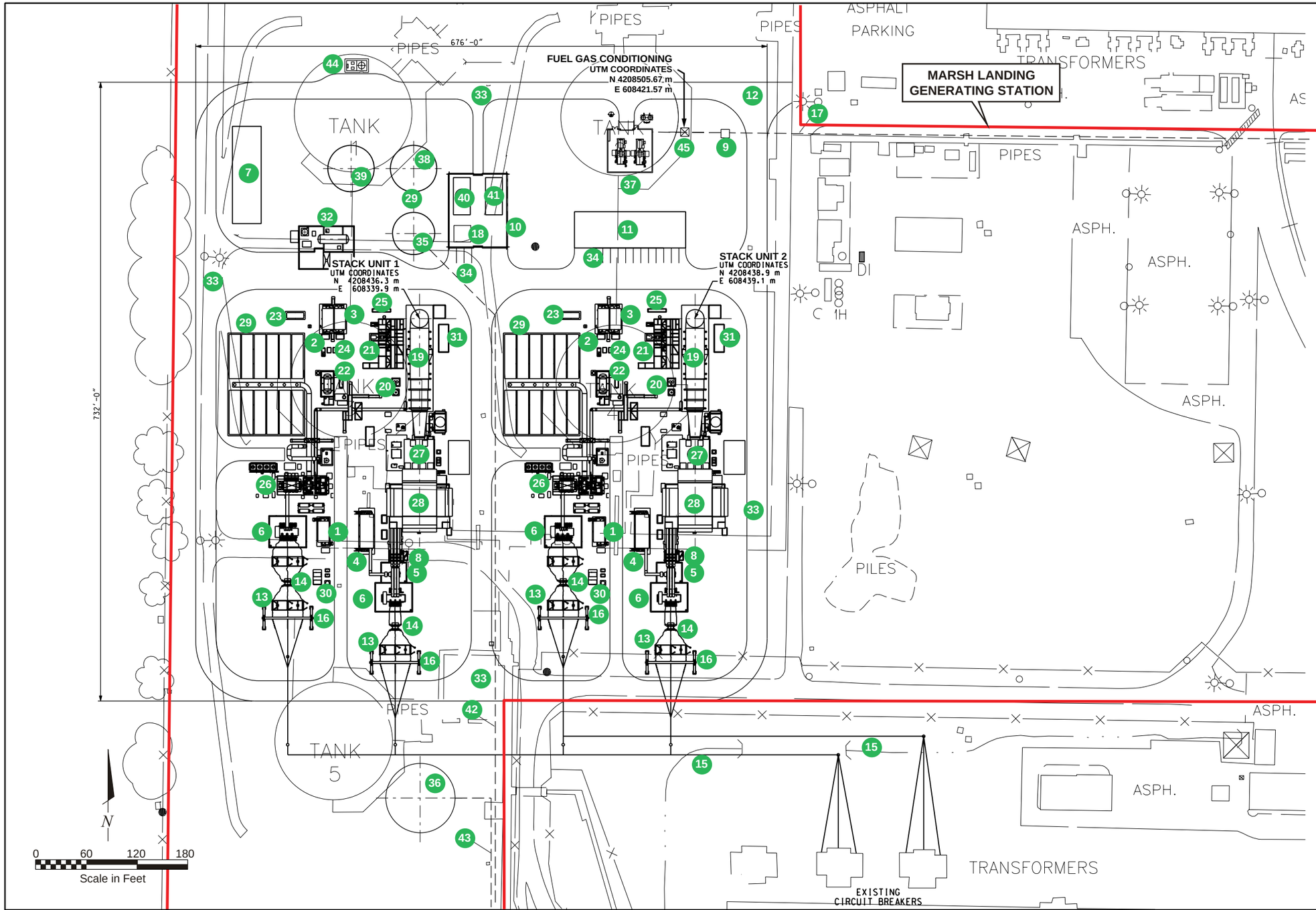

LEGEND

1 Power Control Center (Steam Turbine)
2 LV Switchgear (ACHE)
3 LV Switchgear (BOP)
4 MV Switchgear
5 Unit Auxiliary Tranformer
6 Generator Transformer
7 Oil/Water Separator with Waste Water Sump
8 Generator Circuit Breaker
9 Gas Metering Station
10 Water Treatment Building
11 Control/Admin. Building
12 Plant Entrance Road
13 Air Switch
14 Circuit Breaker
15 Overhead Power Lines
16 Dead End Structure
17 Natural Gas Line
18 EDI System
19 Heat Recovery Steam Generator
20 Boiler Blowdown Tank
21 Boiler Feedwater Pump
22 Deaerator and Condensate Extraction Pump
23 Fin Fan Cooler for Condensate Polishing
24 Chemical Dosing Skids (N_2, O_2, NH_3)
25 Sampling Station
26 Steam Turbine
27 Gas Turbine Enclosure
28 Gas Turbine Inlet Air Filter
29 Air Cooled Heat Exchanger
30 Air Compressors and Dryers
31 SCR and Ammonia Injection Skid
32 Ammonia Unloading/Storage Area
33 Roads
34 Parking
35 Waste Water Storage Tank
36 Raw Water Storage Tank
37 Gas Compressor Enclosure
38 RO Permeate Storage Tank
39 Demin. Water Storage Tank
40 RO (2nd - Pass)
41 RO (2nd - Pass)
42 10" dia. Waste Water Line to Exist. DDSD's Bridgehead Lift Station
43 10" dia. Raw Water Line from Exist. DDSD's Bridgehead Lift Station
44 Nitrogen System
45 Fuel Gas Conditioning

Source:
CH2MHill Lockwood Greene; General Arrangement Marsh Landing Generating Station,
Combined Cycle Siemens Flex 10s Equipment Layout;
Drawing No: MR-GA-ML-01-14 (Rev. D, 06/04/08)

PLOT PLAN – FLEX PLANT 10 UNITS

Marsh Landing Generating Station
July 2008 — Mirant Marsh Landing, LLC
28067344 — Contra Costa County, California

URS

REPLACEMENT FIGURE 2.5-1c

6/26/08 vsa ..\T:\Mirant Contra Costa-Marsh Landing\Graphics\Data Adequacy Supplement\REP_2.5-1c_plotplan_FP10s.ai

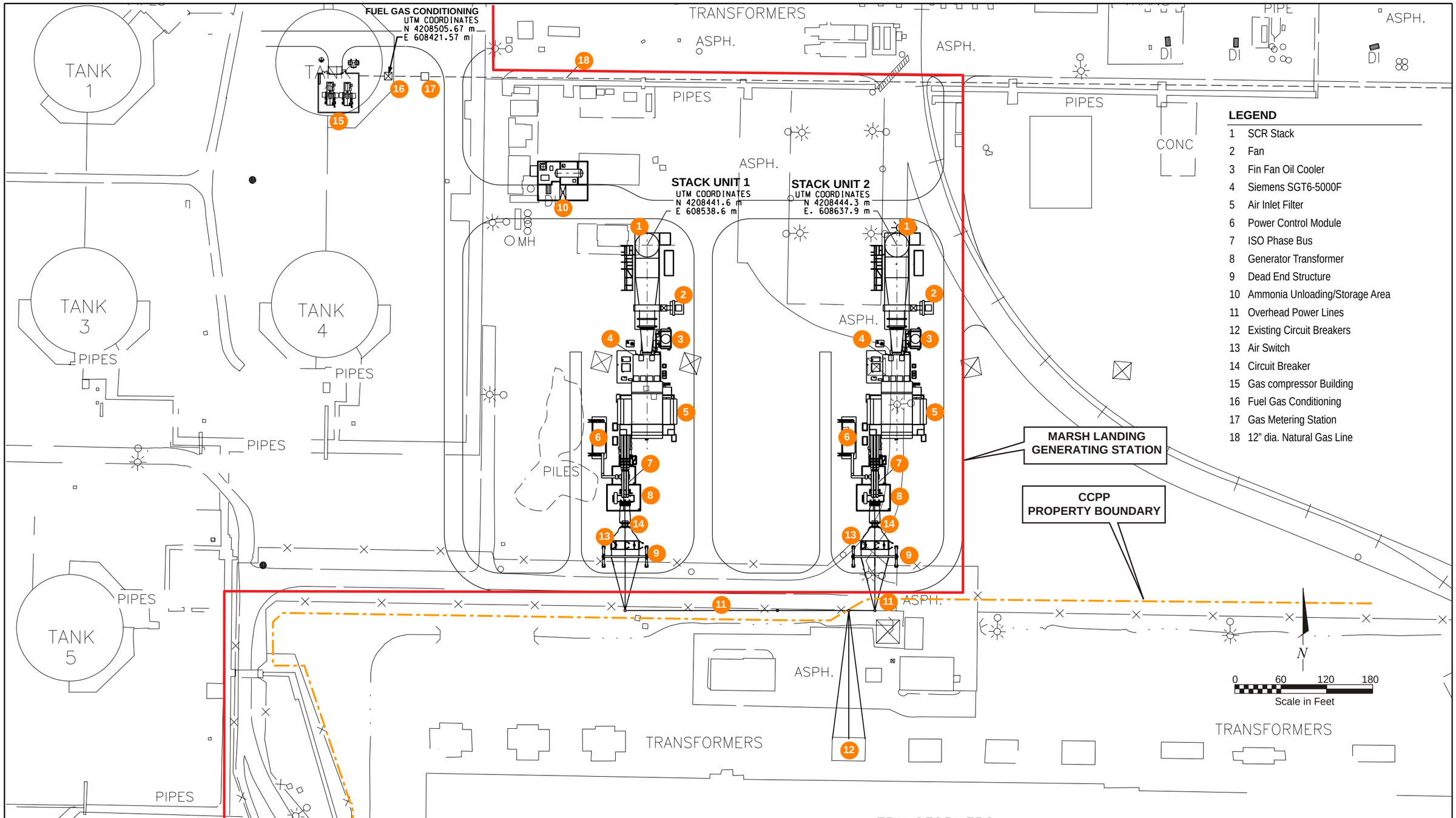

LEGEND

1 SCR Stack
2 Fan
3 Fin Fan Oil Cooler
4 Siemens SGT6-5000F
5 Air Inlet Filter
6 Power Control Module
7 ISO Phase Bus
8 Generator Transformer
9 Dead End Structure
10 Ammonia Unloading/Storage Area
11 Overhead Power Lines
12 Existing Circuit Breakers
13 Air Switch
14 Circuit Breaker
15 Gas compressor Building
16 Fuel Gas Conditioning
17 Gas Metering Station
18 12" dia. Natural Gas Line

Source:
CH2MHill Lockwood Greene; General Arrangement Marsh Landing Generating Station,
Siemens Simple Cycle SGT6-5000F Equipment Layout;
Drawing No: MR-GA-ML-01-15 (Rev. D, 06/10/08)

PLOT PLAN – SIMPLE CYCLE UNITS

Marsh Landing Generating Station
Mirant Marsh Landing, LLC
Contra Costa County, California

July 2008
28067344

URS

REPLACEMENT FIGURE 2.5-1d

6/26/08 vsa ..\T:\Mirant Contra Costa-Marsh Landing\Graphics\Data Adequacy Supplement\REP_2.5-1d_plotplan_SC.ai

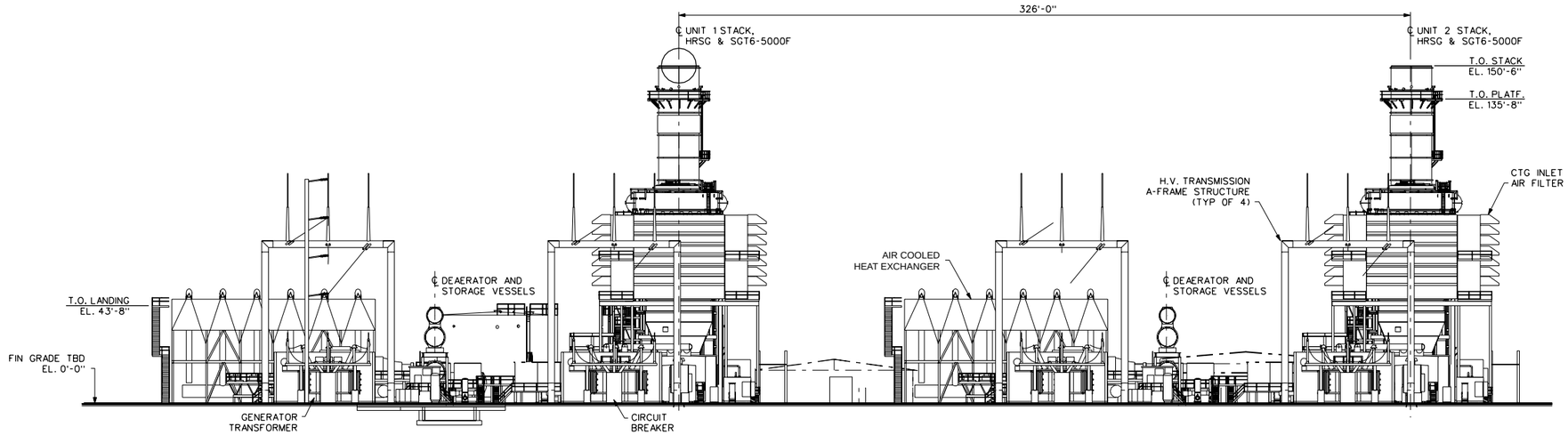

SECTION A-A'
LOOKING NORTH

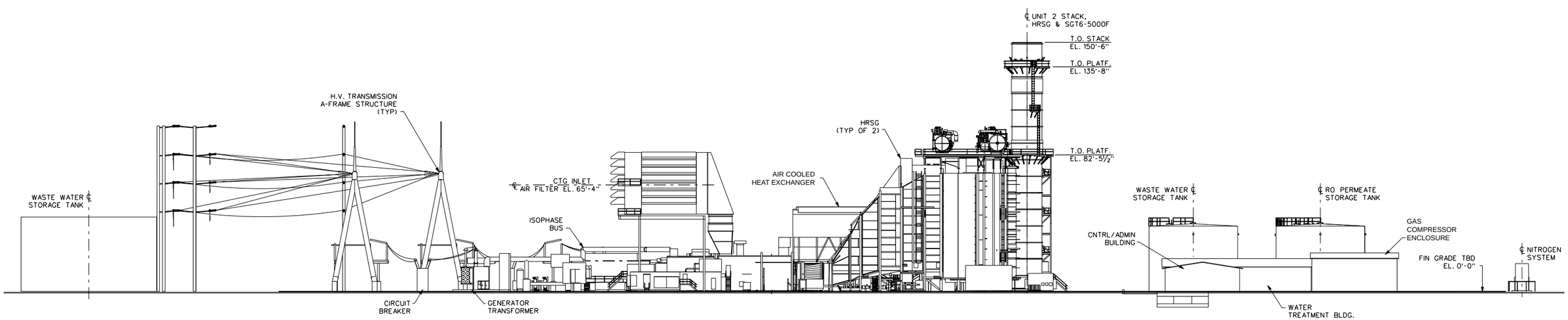

SECTION B-B'
LOOKING WEST

0 60
Approximate Scale in Feet

Source:
CH2MHill Lockwood Greene; General Arrangement, Marsh Landing Generating Station
Combined Cycle Siemens Flex 10s Elevation Views;
Drawing No: MR-GA-ML-01-16 (Rev. C, 4/22/08)

Note:
See Figure 2.5-1b for Section Locations.

ELEVATION VIEWS: FLEX PLANT 10

Marsh Landing Generating Station
Mirant Marsh Landing, LLC
Contra Costa County, California

May 2008
28067344

URS

FIGURE 2.5-2

5/20/08 vsa ..\T:\Mirant Contra Costa-Marsh Landing\Graphics\2.0 Facility Description\2.5-2_Elev_Flex Plant 10.ai

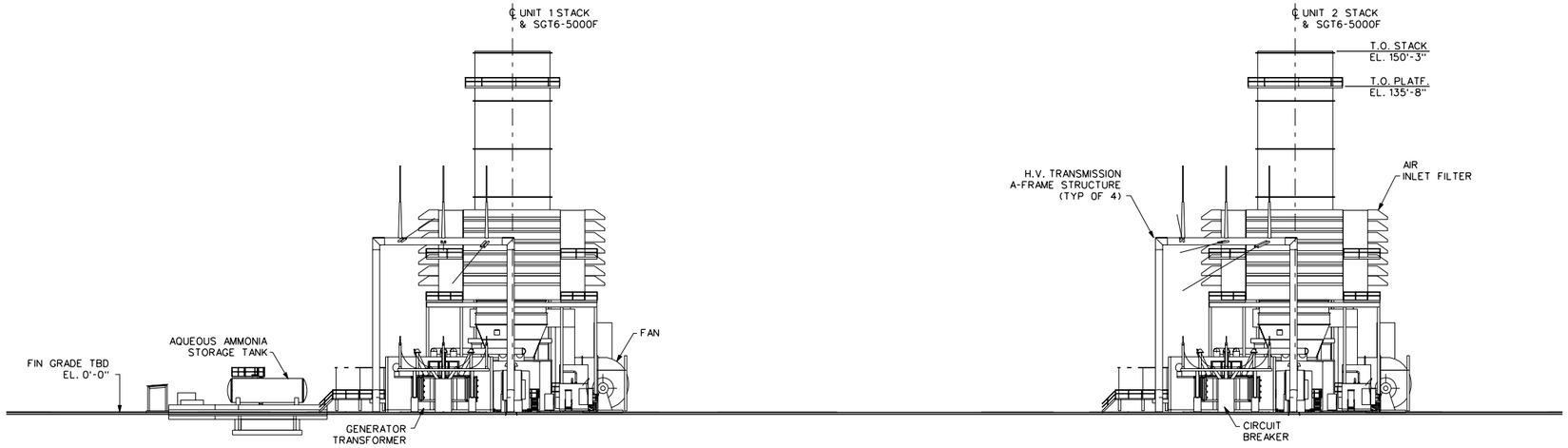

SECTION C-C'
LOOKING NORTH

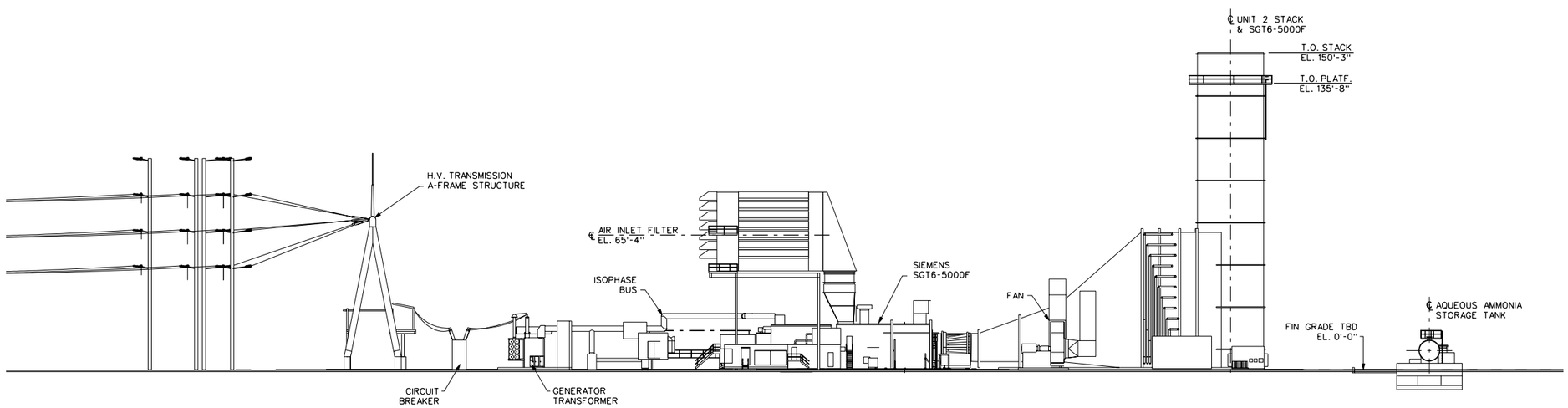

SECTION D-D'
LOOKING WEST

0 60
Approximate Scale in Feet

Source:
CH2MHill Lockwood Greene; General Arrangement, Marsh Landing Generating Station
Siemens Simple Cycle SGT6-5000F Elevation Views;
Drawing No: MR-GA-ML-01-17 (Rev. C, 4/22/08)

Note:
See Figure 2.5-1b for Section Locations.

ELEVATION VIEWS:
SIMPLE CYCLES

Marsh Landing Generating Station
Mirant Marsh Landing, LLC
Contra Costa County, California

May 2008
28067344

URS

FIGURE 2.5-3

5/09/08 vsa/hk ..\T:\Mirant Contra Costa-Marsh Landing\Graphics\2.0 Facility Description\2.5-3_Elev_simple cycle.ai

AERIAL VIEW OF PROPOSED POWER PLANT

May 2008
28067344

Marsh Landing Generating Station
Mirant Marsh Landing, LLC
Contra Costa County, California

URS

FIGURE 2.5-4

5/21/08 vsa ..T:\Mirant Contra Costa-Marsh Landing\Graphics\2.0 Facility Description\2.5-4_aerial-proposed.cdr

		Units	20°F, 90% RH 100% Load	75°F, 54% RH 100% Load	94°F, 32% RH 100% Load
	Gross Power Output	MW	295.3	282.1	274.5
	Gross Heat Rate (LHV)	Btu/kW-hr	6,927	6,956	6,976
1	Water Flow (Evap Cooler)	lb/hr	0	13,000	30,000
2	Steam Flow (Power Augmentation)	lb/hr	0	133,687	133,687
3	Fuel Flow	lb/hr	98,965	94,944	92,637
4	Blowdown	lb/hr	7,000	7,000	7,000
	Net Power Output	MW	286.7	273.9	266.5

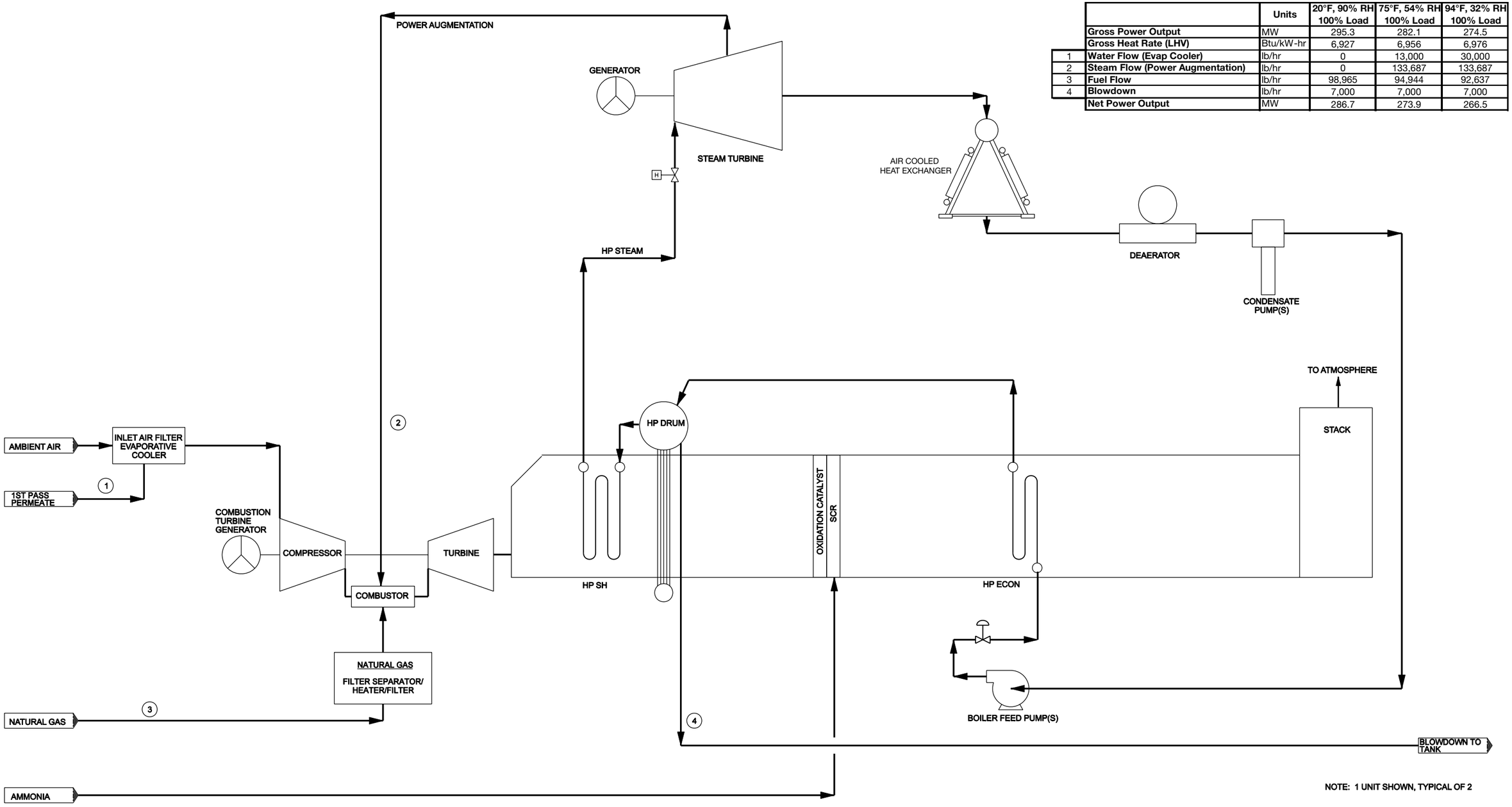

Source:
CH2MHill Lockwood Greene; Process Flow Diagram,
Drawing No: MC-PR-10-#-#-01 (Rev. P2, 06/19/08)

FLEX PLANT 10 HEAT AND MATERIAL BALANCE

Marsh Landing Generating Station
Mirant Marsh Landing, LLC
Contra Costa County, California

July 2008
28067344

URS

REPLACEMENT FIGURE 2.5-5

6/26/08 vsa ..\T:\Mirant Contra Costa-Marsh Landing\Graphics\Data Adequacy Supplement\2.5-5_Heat-Mat Balance.ai

		Units	20°F, 90% RH 100% Load	75°F, 54% RH 100% Load	94°F, 32% RH 100% Load
	Gross Power Output	MW	224.1	194.7	187.5
	Gross Heat Rate (LVH)	Btu/kW-hr	8,855	9,101	9,202
1	Water Flow	lb/hr	0	8,449	16,767
2	Fuel Flow	lb/hr	95,970	86,112	83,814
3	Exhaust Flow	lb/hr	4,366,477	3,916,687	3,817,191
4	Exhaust Temeperature	°F	1,065	1,087	1,097
5	Dilution Air Flow	lb/hr	1,971,557	2,047,291	2,114,453
	Net Power Output	MW	216.9	188.3	181.1

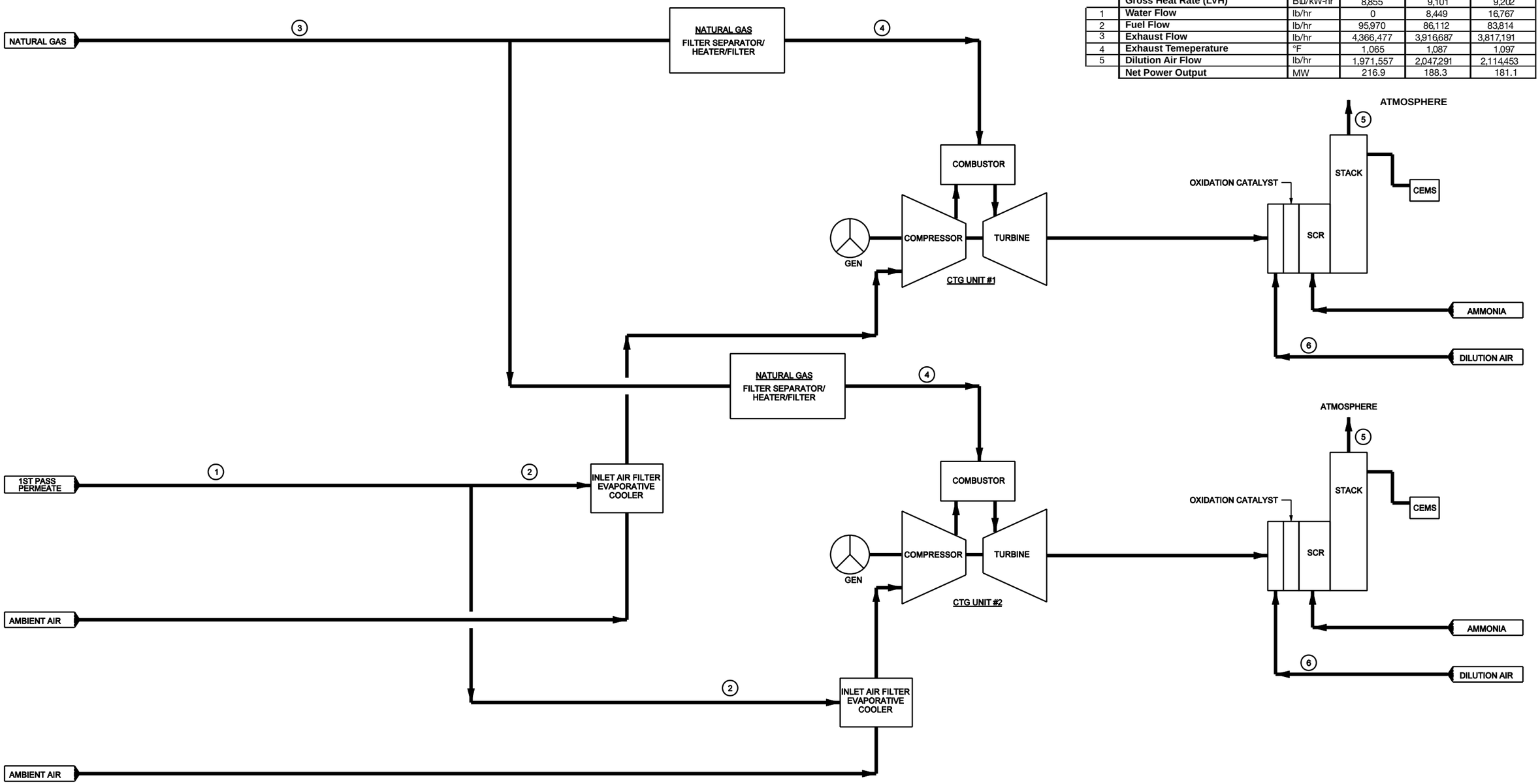

Source:
CH2MHill Lockwood Greene; Process Flow Diagram, Marsh Landing Generation Station
Siemens 5000F Simple Cycle Heat & Material Balance
Drawing No: MC-PR-20-20-01 (Rev. P1, 04/04/08)

SIMPLE CYCLE HEAT AND MATERIAL BALANCE

Marsh Landing Generating Station
Mirant Marsh Landing, LLC
Contra Costa County, California

May 2008
28067344

URS

FIGURE 2.5-6

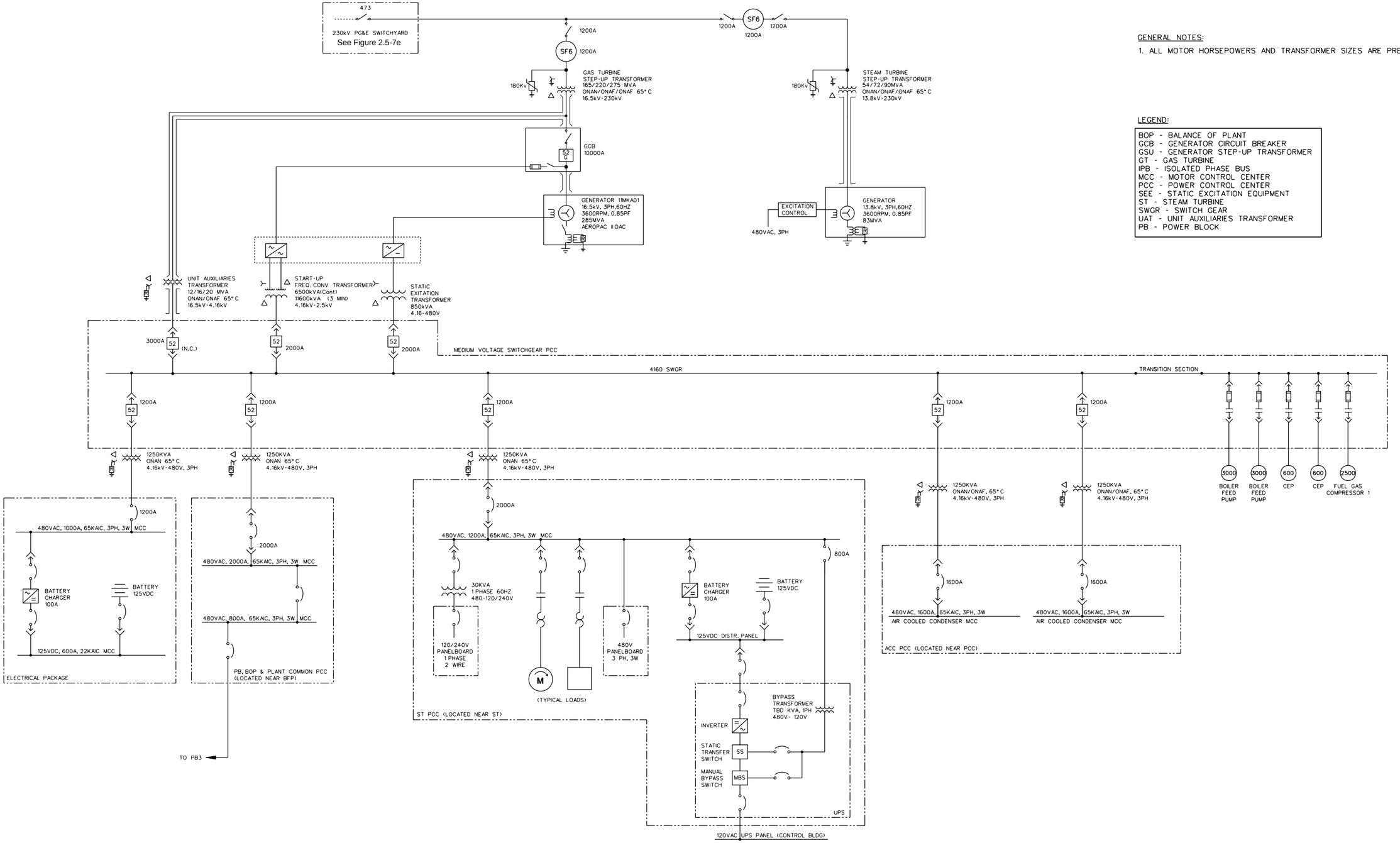

GENERAL NOTES:

1. ALL MOTOR HORSEPOWERS AND TRANSFORMER SIZES ARE PRELIMINARY.

LEGEND:

BOP - BALANCE OF PLANT
GCB - GENERATOR CIRCUIT BREAKER
GSU - GENERATOR STEP-UP TRANSFORMER
GT - GAS TURBINE
IPB - ISOLATED PHASE BUS
MCC - MOTOR CONTROL CENTER
PCC - POWER CONTROL CENTER
SEE - STATIC EXCITATION EQUIPMENT
ST - STEAM TURBINE
SWGR - SWITCH GEAR
UAT - UNIT AUXILIARIES TRANSFORMER
PB - POWER BLOCK

Source:
CH2MHill Lockwood Greene; Electrical, Marsh Landing Generating Station
Combined Cycle Overall Single Line Diagram;
Drawing No. MR-EE-ML-02 (Rev. P3, 05/06/08)

FLEX PLANT 10 – UNIT 1
OVERALL SINGLE LINE DIAGRAM

July 2008
28067344

Marsh Landing Generating Station
Mirant Marsh Landing, LLC
Contra Costa County, California

URS

REPLACEMENT FIGURE 2.5-7a

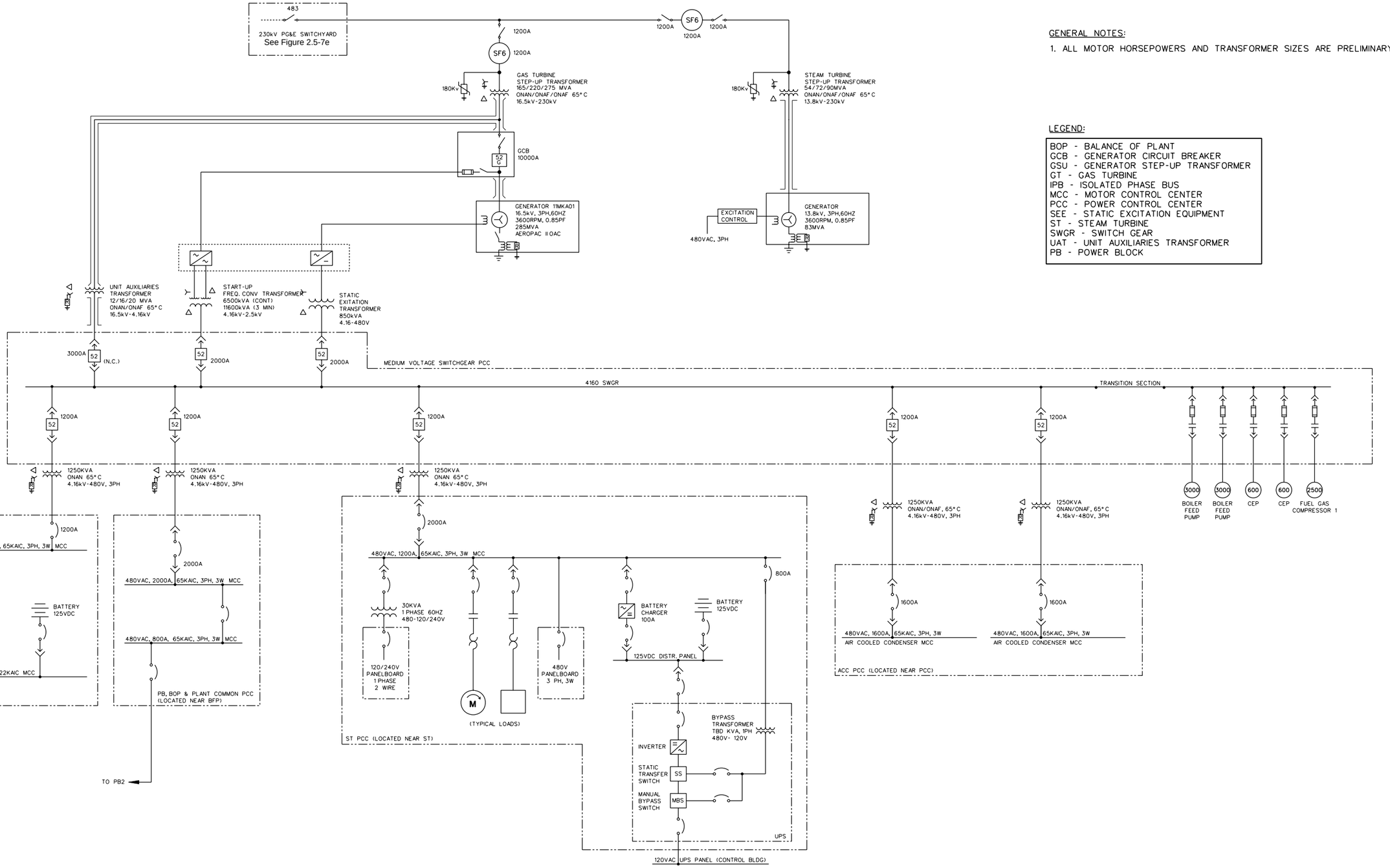

GENERAL NOTES:

1. ALL MOTOR HORSEPOWERS AND TRANSFORMER SIZES ARE PRELIMINARY.

LEGEND:

BOP - BALANCE OF PLANT
GCB - GENERATOR CIRCUIT BREAKER
GSU - GENERATOR STEP-UP TRANSFORMER
GT - GAS TURBINE
IPB - ISOLATED PHASE BUS
MCC - MOTOR CONTROL CENTER
PCC - POWER CONTROL CENTER
SEE - STATIC EXCITATION EQUIPMENT
ST - STEAM TURBINE
SWGR - SWITCH GEAR
UAT - UNIT AUXILIARIES TRANSFORMER
PB - POWER BLOCK

Source:
CH2MHill Lockwood Greene; Electrical, Marsh Landing Generating Station
Combined Cycle Overall Single Line Diagram;
Drawing No. MR-EE-ML-03 (Rev. P3, 05/06/08)

FLEX PLANT 10 – UNIT 2
OVERALL SINGLE LINE DIAGRAM

Marsh Landing Generating Station
Mirant Marsh Landing, LLC
Contra Costa County, California

July 2008
28067344

URS

REPLACEMENT FIGURE 2.5-7b

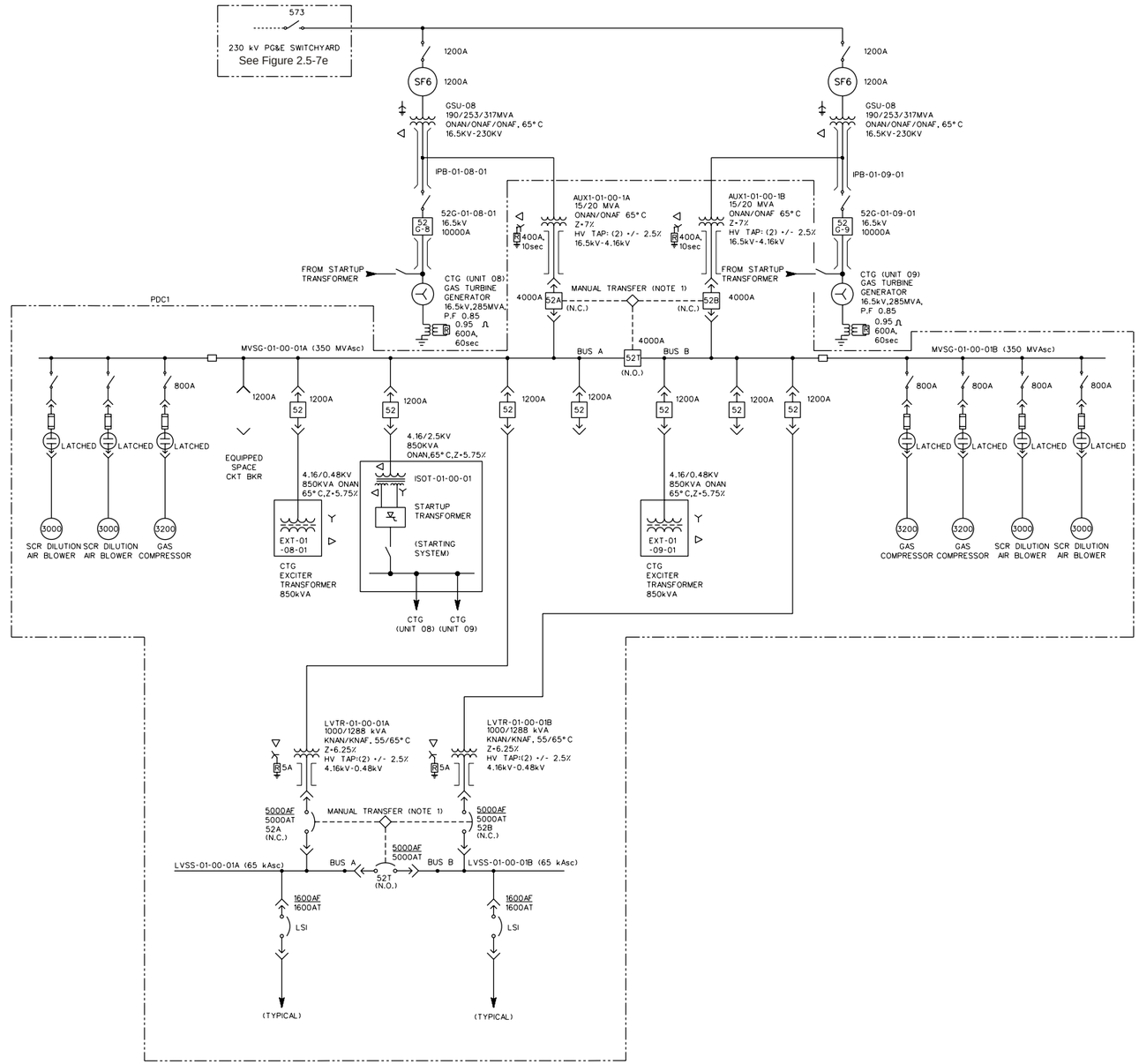

GENERAL NOTES:

1. MAKE BEFORE BREAK SCHEME, MAIN AND BUS TIE BREAKER SHALL NOT BE CLOSED AT THE SAME TIME EXCEPT DURING BUS TRANSFER.
2. ALL MOTOR HORSEPOWERS AND TRANSFORMER SIZES ARE PRELIMINARY.
3. ALL MEDIUM VOLTAGE BREAKERS AND STARTERS ARE TO BE ARC RESISTANT

Source:
CH2MHill Lockwood Greene; Electrical, Marsh Landing Generating Station
Simple Cycle Overall Single Line Diagram;
Drawing No. MR-EE-ML-04 (Rev. P4, 05/21/08)

SIMPLE CYCLE UNITS
OVERALL SINGLE LINE DIAGRAM

Marsh Landing Generating Station
July 2008 — Mirant Marsh Landing, LLC
28067344 — Contra Costa County, California

URS

REPLACEMENT FIGURE 2.5-7c

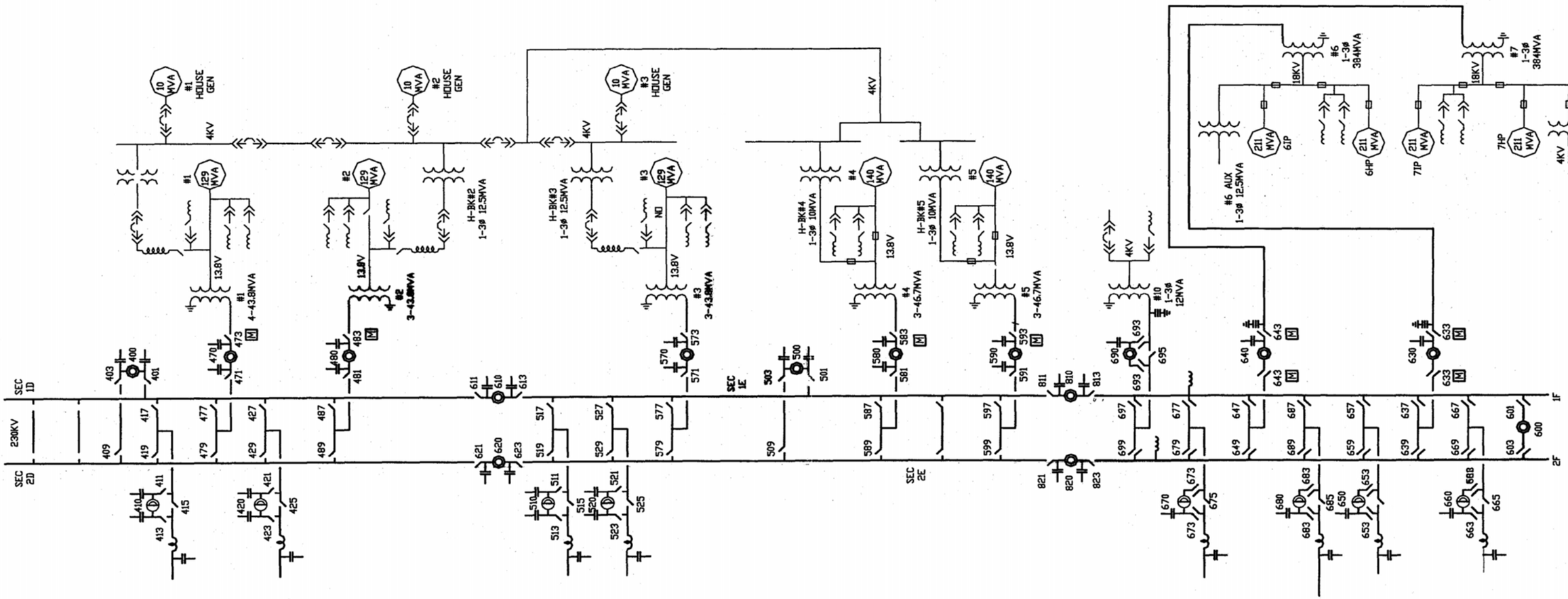

Source:
CH2MHill Lockwood Greene; Contra Costa PG&E single line.pdf (July 2008)

EXISTING SWITCHYARD SINGLE LINE DIAGRAM

Marsh Landing Generating Station
Mirant Marsh Landing, LLC
Contra Costa County, California

July 2008
28067344

URS

NEW FIGURE 2.5-7d

7/08/08 vsa..\T:\Mirant Contra Costa-Marsh Landing\Graphics\Data Adequacy Supplement\NEW_2.5-7d_existing sw.ai

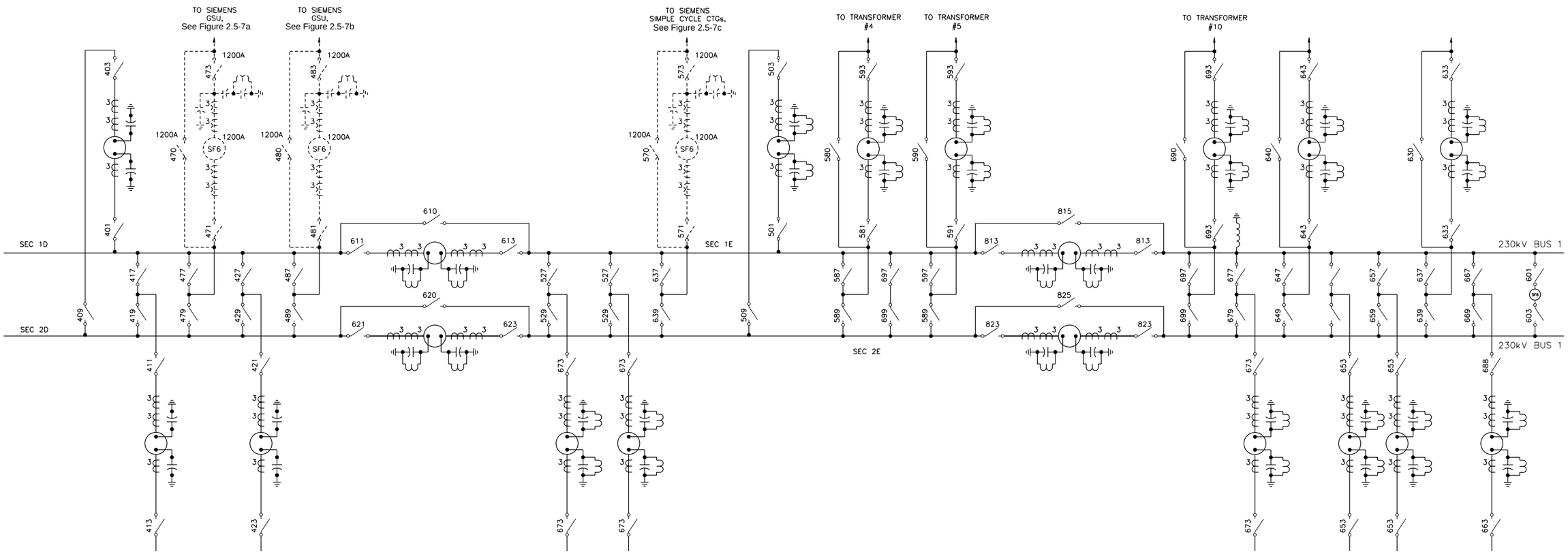

LEGEND:
---------- NEW ELECTRICAL EQUIPMENT

Source:
CH2MHill Lockwood Greene; Electrical, Marsh Landing Generating Station
Switchyard Single Line Diagram;
Drawing No. MR-EE-ML-01 (Rev. P3, 07/08/08)

SWITCHYARD WITH MLGS
SINGLE LINE DIAGRAM

Marsh Landing Generating Station
Mirant Marsh Landing, LLC
Contra Costa County, California

July 2008
28067344

URS

NEW FIGURE 2.5-7e

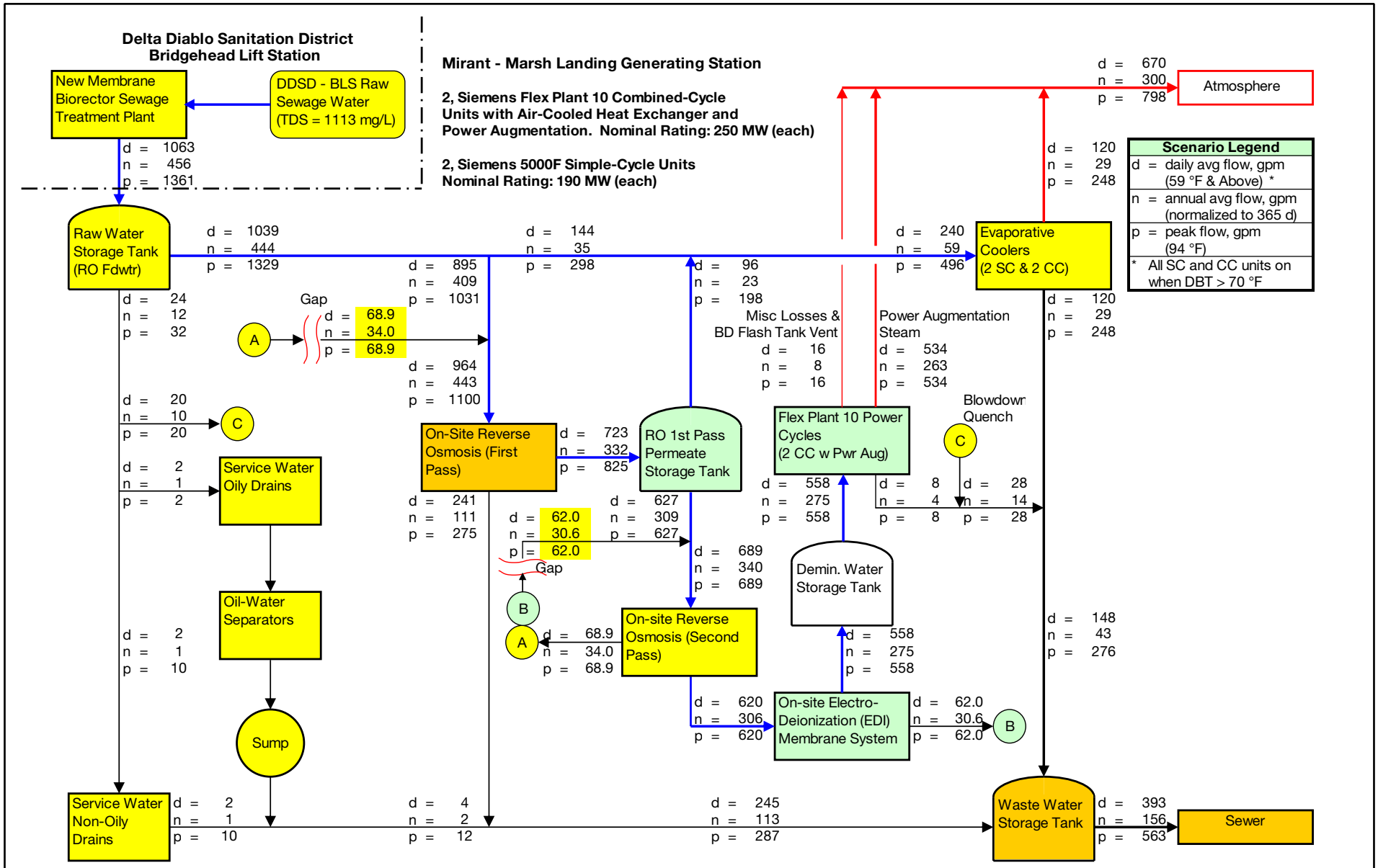

Source:
CH2MHill Lockwood Greene;
Water Balance - High Level Overview (April 22, 2008)

WATER BALANCE DIAGRAM

Marsh Landing Generating Station
Mirant Marsh Landing, LLC
Contra Costa County, California

May 2008
28067344

URS

FIGURE 2.5-8

5/20/08 vsa ..\T:\Mirant Contra Costa-Marsh Landing\Graphics\2.0 Facility Description\2.5-8_WB.ai

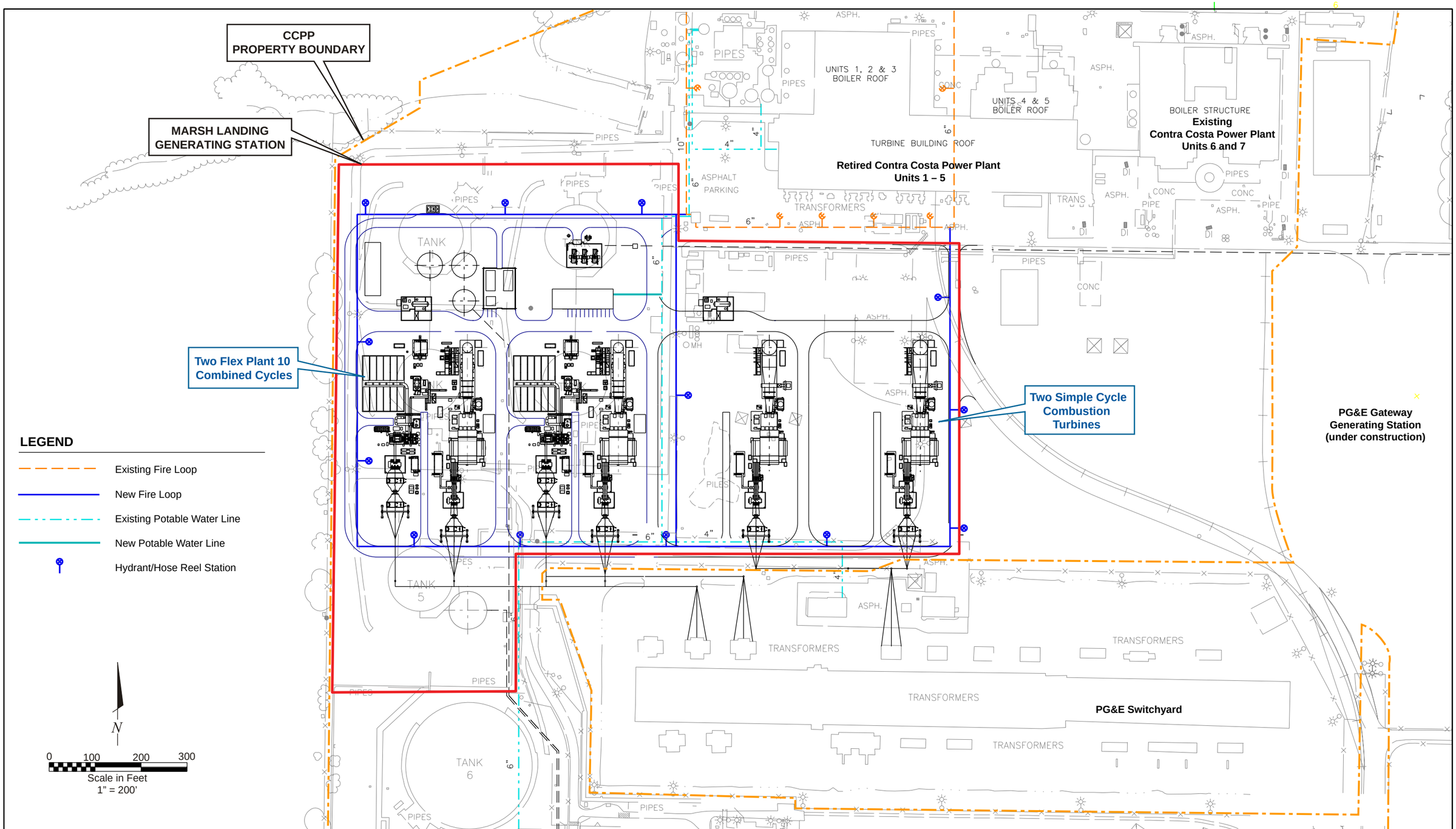

Source:
CH2MHill Lockwood Greene; General Arrangement Marsh Landing Generating Station,
Firewater Loop & Portable Water Main;
Drawing No: MR-GA-ML-01-21 (Rev. A, 04/18/08)

FIREWATER LOOP AND POTABLE WATER MAIN

Marsh Landing Generating Station
Mirant Marsh Landing, LLC
Contra Costa County, California

May 2008
28067344

URS

FIGURE 2.5-9

5/21/08 vsa ..\T:\Mirant Contra Costa-Marsh Landing\Graphics\2.0 Facility Description\2.5-9_firewater.ai

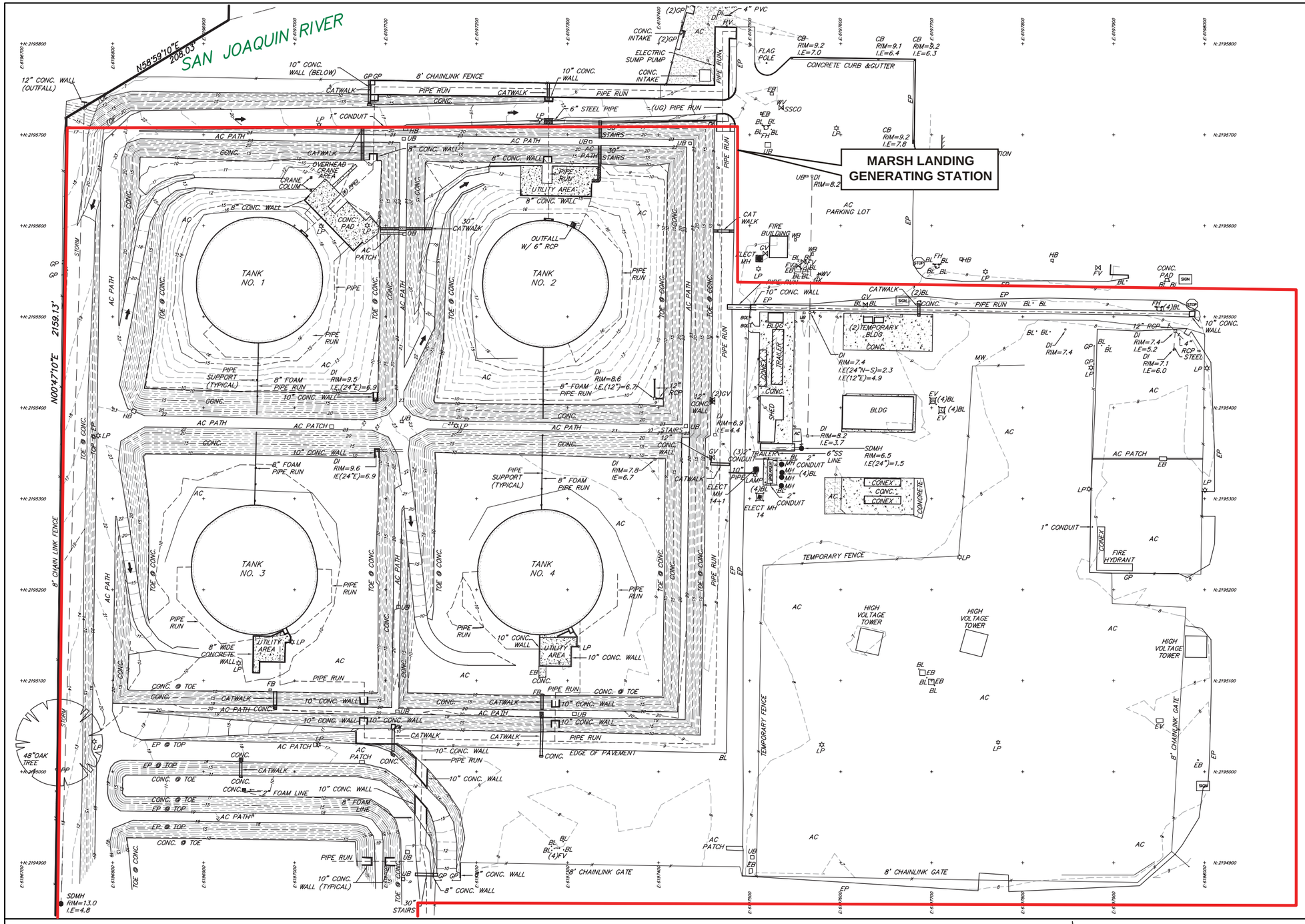

LEGEND:

AC . . . . . ASPHALTIC CONCRETE
BFC . . . . . BACK FACE OF CURB
BL . . . . . BOLLARD
BLDG . . . . BUILDING
BW . . . . . BACK OF WALK
CB . . . . . CATCH BASIN
CMP . . . . CORRUGATED METAL PIPE
CONC . . . . CONCRETE
DI . . . . . DRAIN INLET
D/W . . . . DRIVE WAY
EB . . . . . ELECTRIC BOX
EL . . . . . ELEVATION
ELEC . . . . ELECTRIC
EP . . . . . EDGE OF PAVEMENT
EV . . . . . ELECTRIC VAULT
FH . . . . . FIRE HYDRANT
FL . . . . . FLOWLINE
FR . . . . . FIRE RISER
GB . . . . . GRADE BREAK
GM . . . . . GAS METER
GP . . . . . GATE POST
GR . . . . . GROUND
GV . . . . . GATE VALVE
GWMW . . . GROUND WATER MONITORING WELL
LP . . . . . LIGHT POLE
LS . . . . . LICENSED SURVEYOR
MH . . . . . MANHOLE
SD . . . . . STORM DRAIN
SDA . . . . . STORM DRAIN EASEMENT
SDCB . . . . STORM DRAIN CATCH BASIN
SDE . . . . . STORM DRAIN EASEMENT
SSE . . . . . SANITARY SEWER EASEMENT
SDMH . . . . STORM DRAIN MANHOLE
SF . . . . . STRUCTURE FOOTING
SSCO . . . . SANITARY SEWER CLEANOUT
SSMH . . . . SANITARY SEWER MANHOLE
S/W . . . . . SIDE WALK
TC . . . . . TOP OF CURB
TW . . . . . TOP OF WALL
UB . . . . . UTILITY BOX
UG . . . . . UNDERGROUND
WM . . . . . WATER METER
WV . . . . . WATER VALVE
WVV . . . . . WATER VALVE VAULT
WB . . . . . WATER BOX
NW . . . . . MONITORING WELL
HB . . . . . FIRE HOSE BOX
FV . . . . . FIRE VALVE
PP . . . . . POWER POLE
OH . . . . . OVERHEAD UTILITY LINE

NOTES:

1. HORIZONTAL COORDINATES DATUM BASED UPON CALIFORNIA STATE PLANE COORDINATE SYSTEM 1983 (CCS83) NAD83 1997.0 EPOCH.
2. ELEVATIONS ARE BASED ON MEAN SEA LEVEL DATUM NGVD29 HOLDING MIRANT BRASS DISK ON THE INLET STRUCTURE ELEV.=9.19.
3. SURVEY CONDUCTED ON NOVEMBER 30, 2007

SURVEYOR'S STATEMENT

THIS MAP CORRECTLY REPRESENTS A SURVEY MADE BY ME OR UNDER MY DIRECTION IN CONFORMANCE WITH THE REQUIREMENTS OF THE PROFESSIONAL LAND SURVEYORS' ACT AT THE REQUEST OF MIRANT DELTA, LLC AND COMPLETED ON JANUARY 10, 2008.

DATED:_____

DONALD M. ARNAUD P.L.S. 8025
LICENSE EXPIRES 12/31/08

Source:
Topographic Survey; WO 1769.00a; Mirant, 2008.

N

0 110
Scale in Feet
1" = Approx 110'

EXISTING SITE TOPOGRAPHIC SURVEY

May 2008
28067344

Marsh Landing Generating Station
Mirant Marsh Landing, LLC
Contra Costa County, California

URS

FIGURE 2.6-1

5/09/08 vsa ..\T:\Mirant Contra Costa-Marsh Landing\Graphics\2.0 Facility Description\2.6-1_site topo.ai

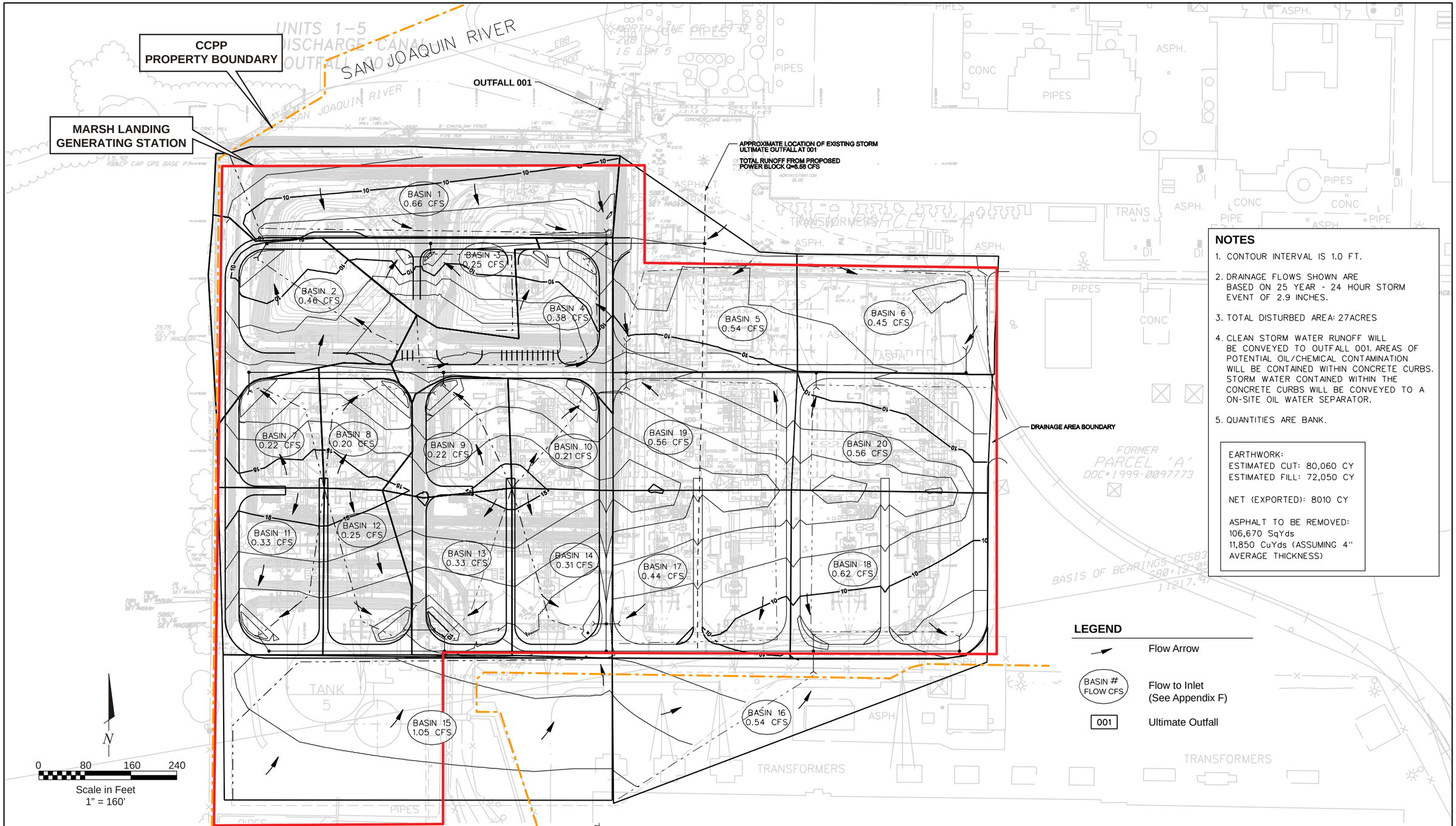

NOTES

1. CONTOUR INTERVAL IS 1.0 FT.
2. DRAINAGE FLOWS SHOWN ARE BASED ON 25 YEAR - 24 HOUR STORM EVENT OF 2.9 INCHES.
3. TOTAL DISTURBED AREA: 27ACRES
4. CLEAN STORM WATER RUNOFF WILL BE CONVEYED TO OUTFALL 001. AREAS OF POTENTIAL OIL/CHEMICAL CONTAMINATION WILL BE CONTAINED WITHIN CONCRETE CURBS. STORM WATER CONTAINED WITHIN THE CONCRETE CURBS WILL BE CONVEYED TO A ON-SITE OIL WATER SEPARATOR.
5. QUANTITIES ARE BANK.

EARTHWORK:
ESTIMATED CUT: 80,060 CY
ESTIMATED FILL: 72,050 CY

NET (EXPORTED): 8010 CY

ASPHALT TO BE REMOVED:
106,670 SqYds
11,850 CuYds (ASSUMING 4" AVERAGE THICKNESS)

LEGEND

→	Flow Arrow
BASIN # FLOW CFS	Flow to Inlet (See Appendix F)
001	Ultimate Outfall

Source:
CH2MHill Lockwood Greene; Civil Marsh Landing Generating Station, Site Grading & Drainage Plan;
Drawing No: MR-CE-CC-00-01 (Rev. D, 5/01/08)

SITE GRADING AND DRAINAGE PLAN

Marsh Landing Generating Station
Mirant Marsh Landing, LLC
Contra Costa County, California

May 2008
28067344

URS

FIGURE 2.6-2

5/21/08 vsa ..\T:\Mirant Contra Costa-Marsh Landing\Graphics\2.0 Facility Description\2.6-2_grading-drainage.ai

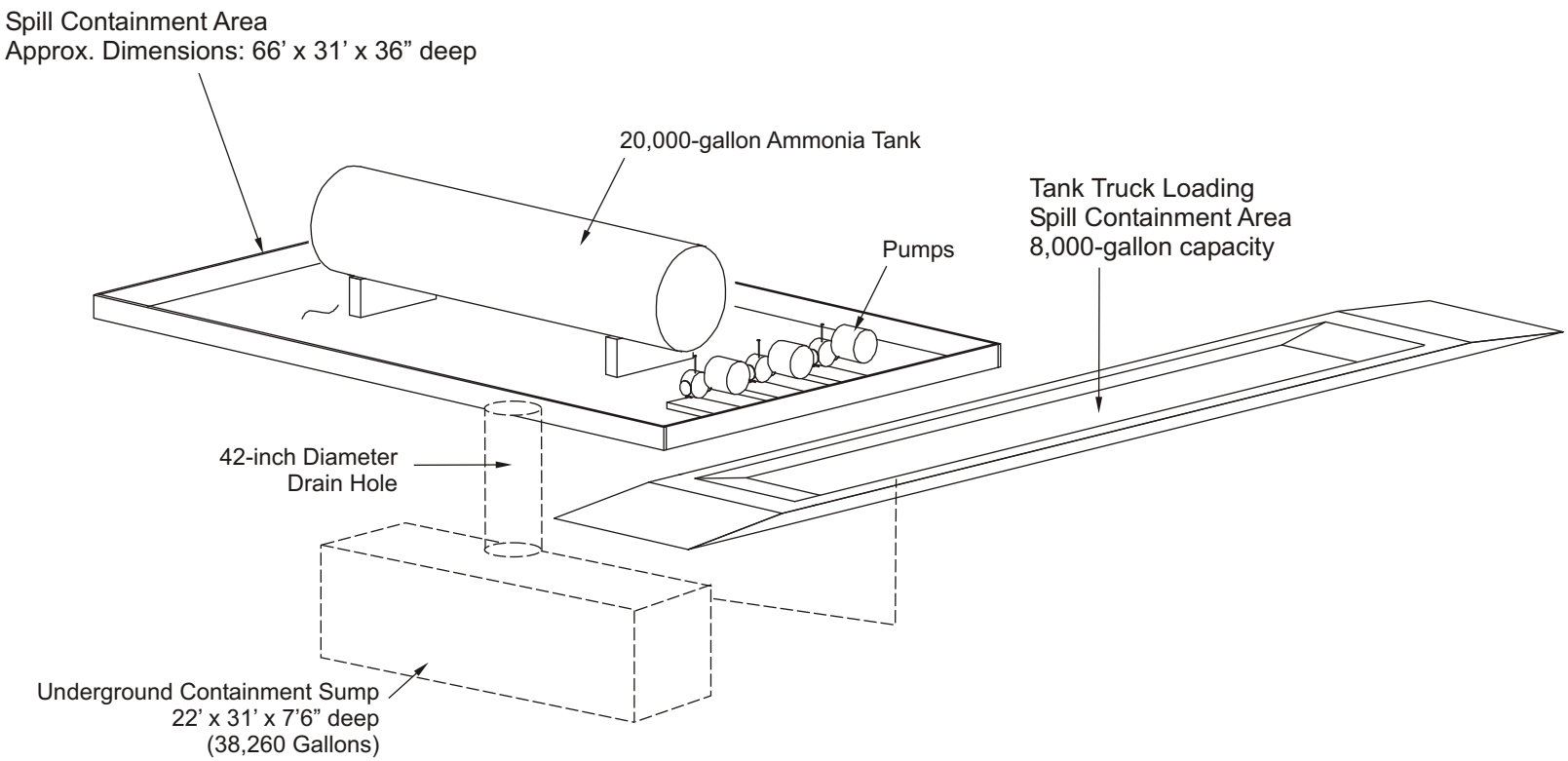

AQUEOUS AMMONIA STORAGE AND SPILL CONTAINMENT SCHEMATIC

May 2008
28067344

Marsh Landing Generating Station
Mirant Marsh Landing, LLC
Contra Costa County, California

URS

FIGURE 2.6-3

5/20/08 vsa ..T:\Mirant Contra Costa-Marsh Landing\Graphics\2.0 Facility Description\2.6-3_aquammonia.cdr

Mirant Marsh Landing Generating Station

ID	Task Name	Start	Finish
1	**Permitting - Application for Certification**	Fri 5/30/08	Fri 7/17/09
2	**Full Notice to Proceed**	Mon 1/5/09	Mon 1/5/09
3	**Design**	**Mon 1/5/09**	**Wed 7/8/09**
4	Preliminary Engineering	Mon 1/5/09	Thu 3/5/09
5	P&IDs	Thu 1/15/09	Wed 4/15/09
6	One Line Diagrams	Fri 2/27/09	Fri 5/8/09
7	Building Design	Wed 3/11/09	Wed 7/8/09
8	**Fabrication/Delivery**	**Fri 5/8/09**	**Mon 4/11/11**
9	GSU Transformers	Fri 5/8/09	Fri 7/9/10
10	Simple Cycle Units	Wed 7/8/09	Mon 9/20/10
11	FP10 Units	Fri 1/8/10	Mon 4/11/11
12	**Construction**	**Mon 10/26/09**	**Fri 3/30/12**
13	Site Mobilization	Mon 10/26/09	Fri 11/13/09
14	Site Preparation & Grading	Mon 11/16/09	Tue 5/18/10
15	Foundations	Tue 4/20/10	Fri 8/6/10
16	Install Simple Cycle Units	Mon 8/9/10	Fri 2/11/11
17	BOP Equip/Elec/Control/Piping - SC Units	Mon 8/16/10	Mon 6/20/11
18	Install FP10 Units	Tue 2/8/11	Thu 9/29/11
19	BOP Equip/Elec/Control/Piping- FP10 Units	Tue 2/22/11	Fri 3/30/12
20	**Startup**	**Mon 2/14/11**	**Mon 6/25/12**
21	Simple Cycle Startup & Commisioning	Mon 2/14/11	Wed 7/13/11
22	Simple Cycle Commercial Online Date	Wed 7/13/11	Wed 7/13/11
23	FP10 Startup & Commissioning	Mon 2/6/12	Mon 6/25/12
24	FP10 Commerical Online Date	Mon 6/25/12	Mon 6/25/12

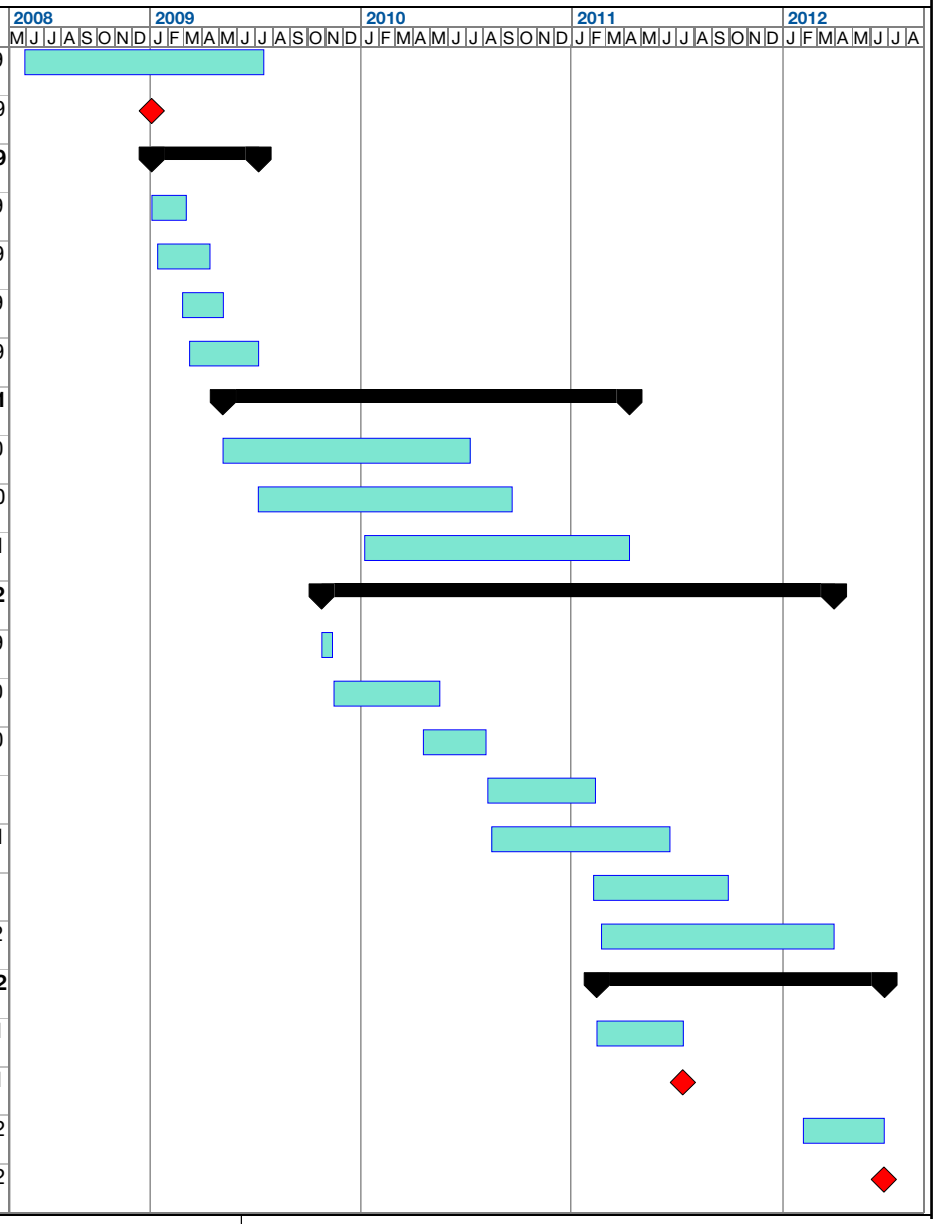

Date:05/23/08

Task Milestone Summary

PROJECT SCHEDULE

Marsh Landing Generating Station
Mirant Marsh Landing, LLC
Contra Costa County, California

May 2008
28067344

URS

FIGURE 2.7-1

5/23/08 vsa ..\T:\Mirant Contra Costa-Marsh Landing\Graphics\2.0 Facility Description\2.7-1_schedule.ai

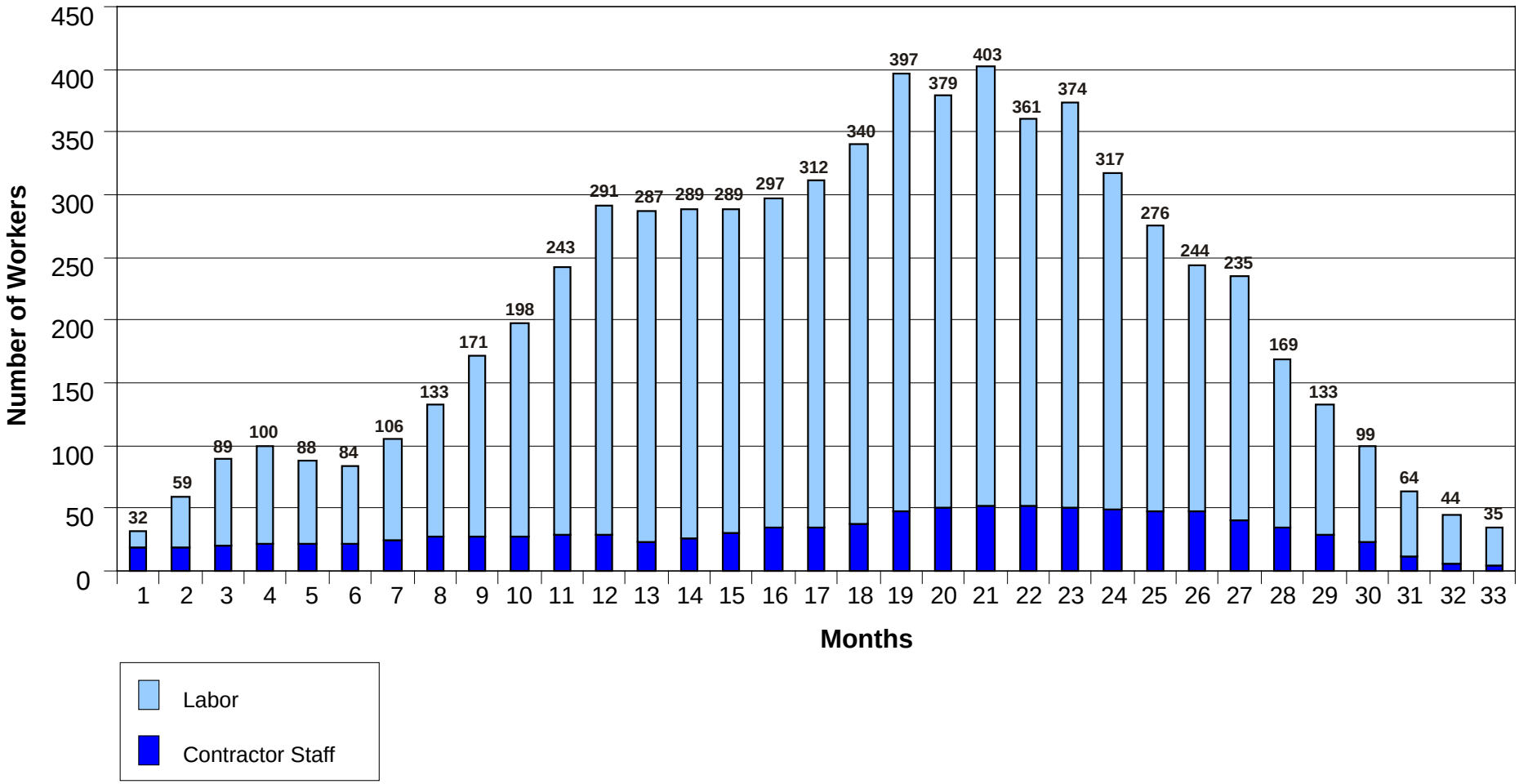

Source:
CH2MHill, May 2008

CONSTRUCTION STAFF BY MONTH

Marsh Landing Generating Station
Mirant Marsh Landing, LLC
Contra Costa County, California

May 2008
28067344

URS

FIGURE 2.7-2

5/09/08 vsa ..\T:\Mirant Contra Costa-Marsh Landing\Graphics\2.0 Facility Description\2.7-2_const staffing.ai

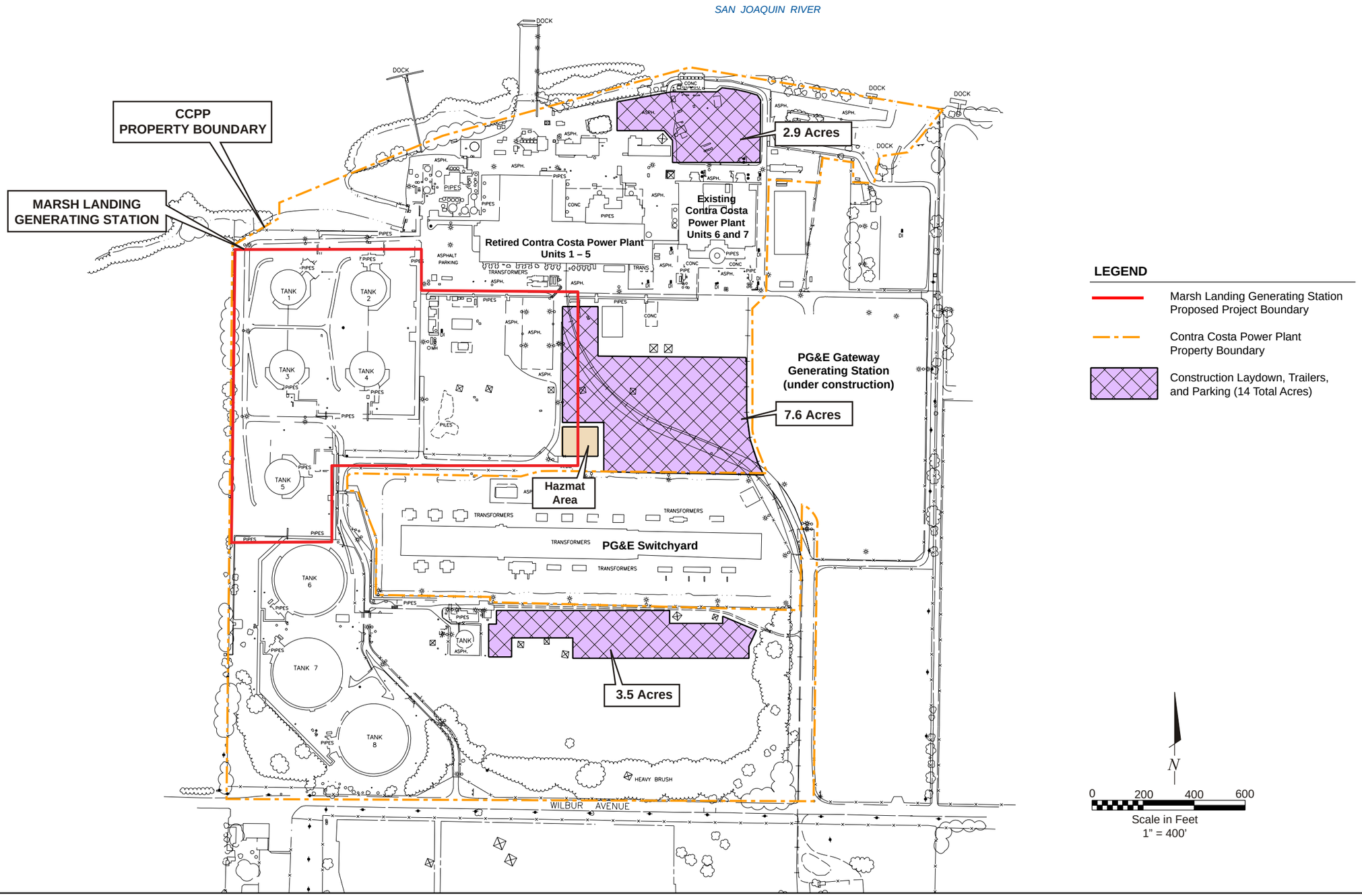

Source:
CH2MHill Lockwood Greene; General Arrangement
Marsh Landing Generating Station Construction Laydown & Parking,
Drawing No: MR-GA-ML-01-19 (Rev. C, 05/01/08)

CONSTRUCTION OFFICE, PARKING, AND LAYDOWN AREAS

Marsh Landing Generating Station
Mirant Marsh Landing, LLC
Contra Costa County, California

May 2008
28067344

URS

FIGURE 2.7-3

5/23/08 vsa ..\T:\Mirant Contra Costa-Marsh Landing\Graphics\2.0 Facility Description\2.7-3_const laydown.ai

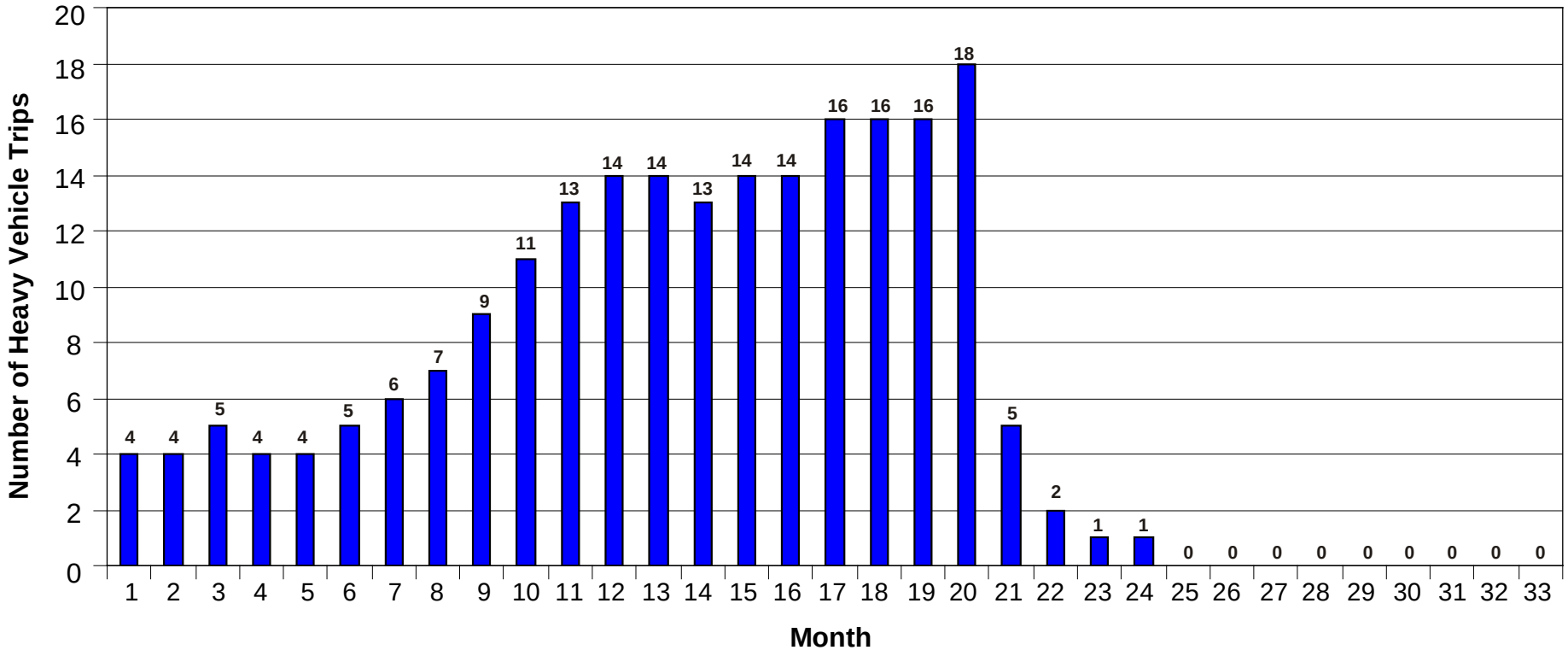

Source:
CH2MHill, May 2008

HEAVY VEHICLE DELIVERY TRIPS

Marsh Landing Generating Station
Mirant Marsh Landing, LLC
Contra Costa County, California

May 2008
28067344

URS

FIGURE 2.7-4

5/20/08 vsa ..\T:\Mirant Contra Costa-Marsh Landing\Graphics\2.0 Facility Description\2.7-4_heavy vehicle.ai