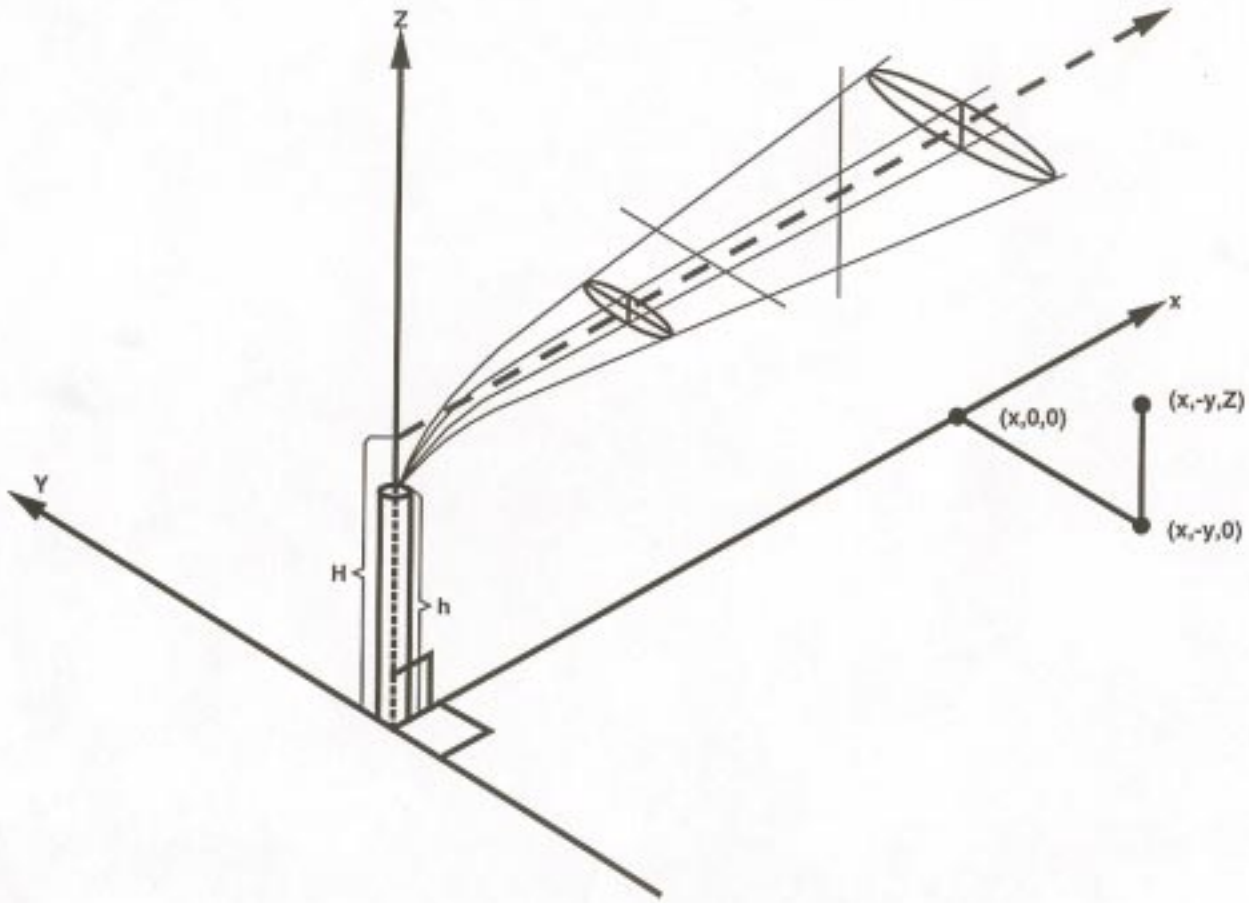

Coordinate system showing Gaussian distributions in the horizontal and vertical.

Figure 8.1-16

Metcalf Energy Center

Coordinate System Showing Gaussian Distributions

Edited by: Sierra Research, Inc.

Developed by: Sierra Research, Inc.

SAC-E-150038 LS.SP.GR GAUSSIAN DIST BASE.FH8 4-21-99sbm