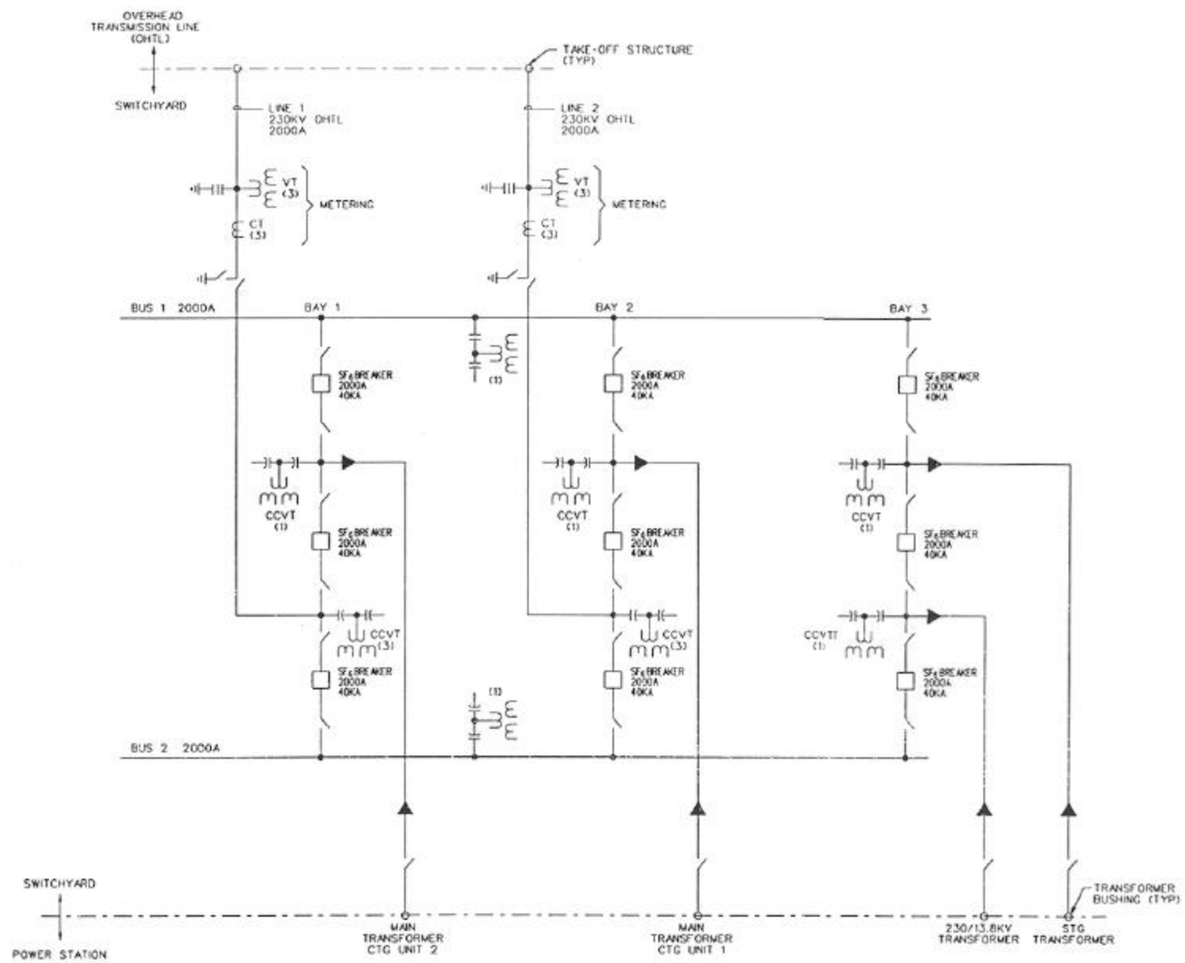

LEGEND:

- CIRCUIT BREAKER
- CURRENT TRANSFORMER (CT)
- COUPLING CAPACITOR VOLTAGE TRANSFORMER (CVT)
- VOLTAGE TRANSFORMER (VT)
- DISCONNECT SWITCH
- SURGE ARRESTER
- GROUND SWITCH
- XLPE CABLE TERMINATOR

NO.	DATE	REVISIONS	BY	CHK	DESIGN SUPV	ENGR	PROJ ENGR
3	3/19/99	ISSUED FOR AFC	BLN	DPJ			

SCALE | DESIGNED DRR | DRAWN BLN | CHIEF ENGR

BECHTEL
GAITHERSBURG, MARYLAND

FIGURE 2.2-5
METCALF ENERGY CENTER

230KV AIS SWITCHYARD
SINGLE LINE DIAGRAM
BREAKER & ONE-HALF SCHEME

JOB NO.	DRAWING NO.	REV
24193-004	E1 ZB 00001	A