EXECUTIVE SUMMARY

Kae C. Lewis

INTRODUCTION

This Preliminary Staff Assessment (PSA) contains the Energy Commission staff's draft analysis and recommendation on the Morro Bay Power Plant project (MBPP). The MBPP and related facilities such as the electric transmission lines, natural gas line, water supply lines and wastewater lines are under the Energy Commission's jurisdiction (Pub. Resources Code §25500). When issuing a license, the Energy Commission acts as lead agency (Pub. Resource Code §25519(c)) under the California Environmental Quality Act (Pub. Resource Code §§21000 et seq.), and prepares an environmental analysis that is equivalent to the preparation of an environmental impact report (Cal. Code Regs., tit. 14 §15251(k)).

It is the responsibility of the Energy Commission staff to complete an independent assessment of the project's potential effects on the environment, the public's health and safety, and whether the project conforms with all applicable laws, ordinances, regulations and standards (LORS). The staff also recommends measures to mitigate potential significant adverse environmental effects and conditions for construction, operation and eventual closure of the project, if approved by the Energy Commission. The analyses contained in this document were prepared in accordance with Public Resources Code section 25500 et seq.; the California Code of Regulations, Title 20, section 1201 et seq. and the California Environmental Quality Act (Pub. Resources Code §21000 et seq.), and its guidelines (Cal. Code Regs., tit. 14 §15000 et seq.).

This document is prepared by staff and is preliminary in nature. This is not the decision document for these proceedings nor does it contain findings of the Energy Commission related to environmental impacts or the project's compliance with local/state/federal legal requirements. The final decision will be made by the Commissioners of the California Energy Commission only after the completion of evidentiary hearings. The Commissioners will consider the recommendations of all interested parties, including those of the Energy Commission staff; the applicant; intervenors; concerned citizens; and local, state, and federal agencies, before making a final decision on Duke Energy, LLC's application to construct and operate the MBPP.

Staff is required to evaluate the conformity of the MBPP with standards and ordinances of the local jurisdiction. Staff has incorporated the initial comments on land use consistency which the City Council of Morro Bay submitted to the Energy Commission on April 20, 2001. In May 2001, the City also submitted a detailed review of the project's consistency with applicable local policies and regulations. The City, however, has not completed its analyses and most of the review's conclusions are preliminary. The Final Staff Assessment (FSA) will reflect the final conclusions of the City and the staff's review about MBPP's consistency with local policies and regulations.

PROJECT LOCATION AND DESCRIPTION

On October 23, 2000 Duke Energy Morro Bay LLC filed an Application for Certification (AFC) seeking approval from the California Energy Commission (Energy Commission) to construct and operate the proposed 1,200-megawatt (MW) Morro Bay Power Plant Project.

The "modernization" Project is proposed to be located at the existing 1,030 MW Morro Bay Power Plant site that is owned and operated by Duke Energy. This site is located within the City of Morro Bay, San Luis Obispo County, near Morro Bay Harbor, bordered on the west by Embarcadero Road and on the east by Highway 1.

The new units will replace currently operating generation Units 1 and 2 (326 megawatts [MW], 1950's technology) and Units 3 and 4 (676 megawatts [MW], 1960's technology) with two state-of-the-art 600 MW combined cycle units. Each new unit will be capable of producing 600 MW, so that upon completion, the plant will be capable of producing a total of 1,200 MW. Each new unit will consist of two gas-fired turbines and one steam turbine driven by the heat produced by the other two turbines. Each new unit will have two, 145 foot tall stacks compared with the existing plant's three 450 foot tall stacks.

The new units are expected to be used for intermediate load operations. The units' duct-fired design enables approximately 84 MW of additional peak capacity per combined cycle unit when required by the electrical system or market conditions.

Natural gas will be delivered from Pacific Gas and Electric Company's Kettleman Compressor Station through PG&E pipeline 306. Natural gas originates from the south with El Paso Natural Gas in Arizona and from the north with PG&E/Northwest in Oregon. The MBPP will continue to interconnect with the electrical grid at the existing PG&E switchyard located on the plant site.

The combined cycle units are expected to use a maximum of 475 million gallons per day (gpd) of seawater for cooling and boiler makeup which is a reduction of 29 percent from the existing plant's usage. MBPP's freshwater usage will be about 10,000 gpd from its onsite wells for routine operation and maintenance. This is approximately the same amount of water that is being used by the current project.

To control emissions of air pollutants, the MBPP's combined cycle units will use the best available control technology (BACT), including selective catalytic reduction (SCR) for control of nitrogen oxides (NOx) and an oxidation catalyst for control of carbon monoxide. The SCR system consists of the reduction catalyst and an aqueous ammonia injection system.

The project will include demolition of the on site fuel oil tank farm, all existing power plant equipment (boiler – steam turbine complex), and removal of three 450 feet tall exhaust stacks. Stage one: demolition of the tank farm will take three months and be complete in 2002. Stage two: demolition of the three 450 foot stacks will begin after commercial operation of the new units and will be complete in 2004. Stage three: existing units will be dismantled by the end of 2007.

The construction force necessary for the three construction stages are expected to be as follows: Stage I (3 months) will require an average of 35 workers. Stage II (21 months) will require roughly 900 workers during the peak months and 400 on average. Stage III (47 months) will require 100 workers during the peak months and 40 on average. Once the new units are on line, the operational staff required is expected to be about 75 employees.

A series of traffic, landscaping and aesthetic Project features are also proposed including Class I and II bike paths, installation of a bridge across Morro Creek, appropriate landscaping, and refurbishment of the sea water intake structure.

Duke Energy proposes construction of two new generating units in a single construction phase lasting 21 months, with initial start-up to follow one month later. Based on construction beginning in early to mid-2002, commercial operation will begin in mid-2004. The capital cost of the Morro Bay Power Plant project is expected to be $650 million.

STAFF'S ASSESSMENT

Each technical area assessment in the PSA includes a discussion of the project and the existing environmental setting; the project's conformance with laws, ordinances, regulations and standards (LORS) and whether the facility can be constructed and operated safely and reliably; project specific and cumulative impacts; the environmental consequences of the project using the proposed mitigation measures; conclusions and recommendations; and any proposed conditions of certification under which the project should be constructed and operated, if approved.

The staff has been able to complete its analyses and make a preliminary recommendation in the fifteen topic areas listed in the table below. In eight topic areas (project description, air quality, alternatives, biological resources, cultural resources, hazardous materials management, soil and water resources, and visual resources) staff's analyses will be incomplete and a preliminary recommendation on the project will not be included in this PSA.

The PSA is a draft document of the Energy Commission staff and therefore, by its very nature, the conclusions and recommendations presented are draft and may change in the Final Staff Assessment (FSA).

COMPLETE ANALYSES

Staff believes its analysis of the power plant is substantially complete for the following 14 technical areas:

Efficiency	Socioeconomics
Facility Design	Traffic & Transportation
Geology & Paleontology	Trans. Line Safety & Nuisance
Land Use	Trans. System Engineering
Noise	Waste Management

Reliability	Worker Safety & Fire Protection
Public Health	General Conditions/Compliance

In each of these topic areas staff believes that if recommendations and conditions of certification are implemented, the MBPP project will be in compliance with the applicable LORS, and no significant adverse direct, indirect, or cumulative impacts will occur.

All of these topic areas will be the subjects of workshop discussions. Staff's conclusions, recommendations and proposed conditions of certification for these topic areas may be modified based on those workshop discussions. In addition, staff may recommend mitigation measures to address issues in project description, air quality, alternatives, biological resources, cultural resources, hazardous materials management, soil and water resources, and visual resources that may require staff to reevaluate its conclusions and recommendations for the other topic areas.

INCOMPLETE ANALYSIS

Eight technical areas are considered incomplete because the information needed to complete the analysis is not yet available to staff: project description, air quality, alternatives, biological resources, cultural resources, hazardous materials management, soil and water resources, and visual resources. Some of these areas may have potentially significant environmental impacts. If so, these impacts may or may not be able to be fully mitigated to less than significant levels. The unresolved issues in these topic areas are presented below:

- **Project Description**

  In addition to the onsite laydown construction areas, the applicant indicated in the AFC that several sites were under consideration for use as offsite material holding, laydown and marshalling areas. The applicant has presented its selection criteria for these sites; however, it has not yet identified the specific location(s) of these areas. For the most part, the applicant's selection criteria suggests that significant environmental impacts will not result from selection of the MBPP laydown area. However, this cannot be confirmed until the specific locations are identified and evaluated. One specific concern is raised in visual resources because of the possible location of these areas adjacent to Highway 1, which is a state designated scenic highway. Once the site is selected, the staff will complete its analysis and determine if significant impacts may result from the laydown site selection.

- **Air Quality**

  While the staff has evaluated the San Luis Obispo Air Pollution Control District's (SLOAPCD) Preliminary Determination of Compliance (PDOC) document, it cannot complete its analysis because the NOx BACT (Best Available Control Technology) determination issue must be resolved before the staff makes final recommendations on this project. MBPP is proposing NOx emissions to be at 2.5 ppm over one hour averaging time. EPA has recently recommended 2.0 ppm over one hour averging time for a similar size project. The SLOAPCD,

which also is considering the project's BACT ammonia slip level of 5 ppm, is evaluating this issue and will report its results in the final DOC. In addition, the applicant needs to evaluate the air emissions associates with the demolition phase of the existing facility and assess the air impacts from during this phase. While the staff does not expect significant impacts to be identified, it cannot complete its analysis and make a recommendation until this additional information is reviewed.

- **Alternatives**

  The staff has evaluated different types of alternatives to the proposed project including other generation options, a no project alternative, a reduced project size alternative, and six location alternatives. The staff has sufficient information to conclude that energy efficiency measures and alternative technologies (geothermal, solar, wind, and hydroelectric) are not feasible alternatives to the proposed project.

  The staff was also able to evaluate the no project alternative and the smaller sized project alternative. The no project alternative, while it would result in the reduction of construction impacts and some air pollutants, would also not allow the proposed modernization to occur. The project, however, would reduce visual and noise impacts of the existing plant by removal of the existing stacks and generation building, and would also contribute to meeting the State's growing needs for electrical power. The option of constructing a smaller sized project, such as a 240 MW combined cycle unit, would cause traffic, biological resources and water resource impacts similar to those of the proposed project and would not help to alleviate the State's current electricity shortages.

  The staff analyzed six alternative locations. CEQA requires that an alternatives analysis focus on reducing the project's potential significant impacts to less than significant levels. In the MBPP, these potential significant adverse impacts may occur in biological resources, cultural resources, soils and water resources, and visual resources. While this alternatives analysis contains some preliminary conclusions, it cannot be completed until the identification of significant impacts in all technical areas is complete. At that point, staff can complete its evaluation of whether project alternatives would mitigate significant impacts.

- **Biological Resources**

  The applicant proposes to continue the use of the existing once-through seawater cooling system that includes an intake structure that draws water from Morro Bay and an outfall that discharges to Estero Bay. The use of seawater for cooling can cause long-term impacts to aquatic organisms first, from the entrainment and impingement (drawing in and killing aquatic animals) at the intake in Morro Bay, and second, from water temperature differentials created when heated water is discharged into Estero Bay.

  Both withdrawal and discharge are regulated by the Central Coast Regional Water Quality Control Board (CCRWQCB) through the National Pollutant Discharge Elimination System (NPDES) permit. In preparation for the reissuance of the NPDES existing permit, the applicant has conducted biological

studies of entrainment and impingement (known as “316(b)” studies), and studies of thermal discharge (known as “316(a)” studies) to evaluate the project’s impacts on aquatic life. The 316(a) studies were completed in May, 2001; results indicated that the MBPP’s thermal discharge plume did not create significant impacts.

Early results in the 316(b) studies, however, identified that the proportional entrainment rates indicated by the sampling results suggest that the existing Morro Bay Power Plant is having a significant negative environmental impact on some aquatic species. The staff has identified three options to mitigate these impacts which include alternative cooling technologies, including dry cooling, and a compensation and mitigation plan. These options will be presented by both the Energy Commission staff in the PSA and the CCRWQCB in the draft NPDES that is expected to be filed in late May. The staff will complete its analysis of the final 316(b) study results and mitigation options and make its final recommendations in the FSA. In addition, they will evaluate potentially significant impacts in terrestrial biological resources and the applicant’s proposed mitigation.

- **Cultural Resources**
  The Morro Bay Power Plant is located on land that was inhabited during prehistoric and historic times by Native Americans and, as a consequence, the area is rich with valuable cultural resources. Because project-related site development and construction would include ground disturbance, the proposed project has the potential to adversely affect both previously identified and currently unknown resources. The applicant has engaged in cultural resources surveys to identify impacts and has proposed mitigation which includes the avoidance of certain locations on the plant site.

  In order to complete its analysis of impacts, however, the staff requires additional information. Morro Rock has been identified as a sacred site by representatives of both the Salinan and Chumash communities. The impacts of the project on both a medicine plant (Indian Pink) and on the peregrine falcons on Morro Rock cannot be determined until additional information on biological impacts is obtained and evaluated.

  Two significant historic Native American sites are present within the vicinity of the project. The applicant has indicated that methods including fencing and cultural resources monitoring would be used to avoid and protect previously recorded resources. Staff is currently evaluating information on the methods used to determine site boundaries which will help to determine impacts to the site, evaluate the applicant’s proposed mitigation, and, if necessary, develop additional mitigation.

  Significant impacts to historic resources, if any, will be identified after staff has reviewed the report on historical resources that will be provided by the applicant at the end of May 2001. The staff’s analysis of this report will include an evaluation of impacts of MBPP project activities such as the renovation of the

existing cooling water intake building and the demolition of the existing power plant.

The known and suspected impacts of MBPP on cultural resources are of crucial interest to Native American groups, most notably the Salinian and Chumash. The applicant has adopted a Memorandum of Agreement with the San Luis Obispo County Chumash Council. Staff 's preliminary conditions for the project require coordination with other interested Native American groups to assist with cultural resources identification and disposition.

- **Hazardous Materials Management**

  Staff's evaluation of the proposed project indicates that, with staff's proposed mitigation measures, hazardous materials use on site will pose no potential for significant impacts on the public. In addition to use, hazardous materials, including aqueous ammonia and sodium hypochloride, will be transported to the project site via tanker truck. The potential for risks due to the transportation of hazardous materials remain to be determined. While the identification of significant impacts is not expected from this additional analysis, this information is needed for the staff to complete its analysis and recommendations for mitigation.

- **Soil and Water Resources**

  The proposed Morro Bay Power Plant Project will use both seawater and groundwater from onsite wells for its operations. Seawater required for cooling is projected to be 475 million gallons per day, a 29 percent reduction from its current use. The projected use of groundwater for maintenance and domestic use is slightly less than MBPP's current average use of 10,000 gpm (but which peaks at 100,000 gpm for short time periods). The following are the potential issues that relate to water supply and wastewater discharge: the choice of an appropriate cooling water technology or mitigation of the cooling water impacts; the impact of MBPP's onsite groundwater pumping on both the quantity and the quality of well supplies for the City of Morro Bay; and, the potential for flooding and the adequacy of the applicant's proposed stormwater management plan. Additional information from the applicant and other agencies is necessary before the staff can complete its analyses and make recommendations on these issues.

  Water supply for the proposed project is seawater from Morro Bay diverted for once-through cooling. However, this technology has been proven to cause significant impacts to aquatic resources. As noted in Biological Resources, staff will be evaluating alternative sources of cooling water, including reclaimed water, as well as alternative cooling technologies such as dry and wet/dry cooling which may minimize water consumption and wastewater discharge.

  There remains a concern that the water requirements proposed for the construction phase of the project will require substantial pumping that may affect the capacity of the City of Morro Bay's wells. In addition, the efforts to keep the petroleum discharge (currently being remediated at the intersection of Highway

41 and Main Street) from contaminating the well supplies of the City of Morro Bay may be significantly impacted by MBPP's construction pumping.

The staff will complete its analysis of the MBPP's flooding potential and mitigation measures when it receives the applicant's completed Erosion Control and Stormwater Management Plan (SWPP).

- **Visual Resources**

  Staff concludes that from most viewing areas of the existing power plant and proposed project site, the proposed project would result in an overall long-term improvement in visual quality. Staff has also concluded that the proposed project would cause substantially adverse visual impacts during the six-year period of construction and demolition. However, given the long-term visual improvement that would occur with removal of the existing power plant, these interim construction impacts are not considered significant. One possible exception to this conclusion is the potential visual impact associated with the two off site laydown areas presented in the AFC. The precise location of these laydown areas has not been identified and therefore, the significance of any resulting visual impacts cannot yet be determined. However, if the laydown areas are prominent in views from Highway 1, significant visual impacts may result.

  The proposed project also has the potential to cause long-term significant adverse visual impacts to Morro Strand State Beach and the Morro Dunes Trailer Park and Resort Campground. These long-term operational impacts would result from the project's contrasting appearance and foreground visibility. These impacts may be mitigated by an appropriate screening and landscaping plan, however, the staff does not yet have this information. The project also has the potential to cause nighttime lighting impacts when viewed from the elevated perspectives of two residential areas. The significance of the potential lighting impacts cannot be determined at this time because the project is lacking a detailed lighting plan. However, effective implementation of staff's proposed mitigation measures and conditions of certification would reduce the long-term significant adverse visual impacts and any potential nighttime lighting impacts to levels that are not significant. The staff is expecting to receive additional information to complete its analysis and make a final recommendation on significant visual impacts of the MBPP in the FSA.

These and the remaining subject areas will be discussed in upcoming workshops. Staff's conclusions, recommendations and proposed conditions of certification for these topic areas may be modified based on those workshop discussions. In addition, staff may recommend mitigation measures to address issues in project description, air quality, alternatives, biological resources, cultural resources, hazardous materials management, soil and water resources, and visual resources that may require staff to reevaluate its conclusions and recommendations for the other topic areas.

MORRO BAY POWER PLANT PROJECT (AFC)
PRELIMINARY STAFF ASSESSMENT

EXECUTIVE SUMMARY 1

INTRODUCTION 2

PROJECT DESCRIPTION 3

ENVIRONMENTAL ASSESSMENT 4

- AIR QUALITY 4.1
- BIOLOGY 4.2
- CULTURAL RESOURCES 4.3
- HAZARDOUS MATERIALS MANAGEMENT 4.4
- LAND USE 4.5
- NOISE 4.6
- PUBLIC HEALTH 4.7
- SOCIOECONOMIC RESOURCES 4.8
- TRAFFIC AND TRANSPORTATION 4.9
- TRANSMISSION LINE SAFETY AND NUISANCE 4.10
- VISUAL RESOURCES 4.11
- WASTE MANAGEMENT 4.12
- WATER AND SOILS 4.13
- WORKER SAFETY AND FIRE PROTECTION 4.14

ENGINEERING ASSESSMENT 5

- FACILITY DESIGN 5.1
- GEOLOGY AND PALEONTOLOGY 5.2
- POWER PLANT EFFICIENCY 5.3
- POWER PLANT RELIABILITY 5.4
- TRANSMISSION SYSTEM ENGINEERING 5.5

ALTERNATIVES 6

GENERAL CONDITIONS 7

PREPARATION TEAM 8

INTRODUCTION

Kae C. Lewis

PURPOSE OF THIS REPORT

The Preliminary Staff Assessment (PSA) presents the California Energy Commission (Energy Commission) staff's independent analysis of the Duke Energy, LLC Application for Certification (AFC). The PSA is a staff document. It is neither a Committee document, nor a draft decision. The PSA describes the following:

- the existing environmental setting;
- the proposed project;
- whether the facilities can be constructed and operated safely and reliably in accordance with applicable laws, ordinances, regulations and standards (LORS);
- the environmental consequences of the project including potential public health and safety impacts;
- cumulative analysis of the potential impacts of the project, along with potential impacts from other existing and known planned developments;
- mitigation measures proposed by the applicant, staff, interested agencies and intervenors that may lessen or eliminate potential impacts;
- the proposed conditions under which the project should be constructed and operated, if it is certified;
- project alternatives; and
- requirements for project closure.

The analyses contained in this PSA are based upon information from: 1) the AFC; 2) subsequent submittals; 3) responses to data requests; 4) supplementary information from local and state agencies and interested individuals; 5) existing documents and publications; and 6) independent field studies and research. The analyses for most technical areas include discussions of proposed conditions of certification. Each proposed condition of certification is followed by a proposed means of "verification." The verification is not part of the proposed condition, but is the Energy Commission Compliance Unit's method of ensuring post-certification compliance with adopted requirements. The PSA presents conclusions and proposed conditions of certification that apply to the design, construction, operation and closure of the proposed facility.

The Energy Commission staff's analyses were prepared in accordance with Public Resources Code section 25500 et seq. and Title 20, California Code of Regulation section 1701 et seq., and the California Environmental Quality Act (CEQA) (Pub. Resources Code, § 21000 et seq.).

ORGANIZATION OF THE STAFF ASSESSMENT

The PSA contains an Executive Summary, Introduction, Project Description, and Project Alternatives. The environmental, engineering, and public health and safety analysis of the proposed project is contained in a discussion of 19 technical areas. Each technical area is addressed in a separate chapter. They include the following: air quality, public health, worker safety and fire protection, transmission line safety, hazardous material management, waste management, land use, traffic and transportation, noise, visual resources, cultural resources, socioeconomics, biological resources, soil and water resources, geological and paleontological resources, facility design, power plant reliability, power plant efficiency, and transmission system engineering. These chapters are followed by a discussion of facility closure, project construction and operation compliance monitoring plans, and a list of staff that assisted in preparing this report.

Each of the 19 technical area assessments includes a discussion of:

- laws, ordinances, regulations and standards (LORS);
- the regional and site-specific setting;
- project specific and cumulative impacts;
- mitigation measures;
- closure requirements;
- conclusions and recommendations; and
- conditions of certification for both construction and operation (if applicable).

ENERGY COMMISSION SITING PROCESS

The California Energy Commission has the exclusive authority to certify the construction and operation of thermal electric power plants 50 megawatts (MW) or larger. The Energy Commission certification is in lieu of any permit required by state, regional, or local agencies, and federal agencies to the extent permitted by federal law (Pub. Resources Code, section 25500). The Energy Commission must review power plant AFCs to assess potential environmental impacts including potential impacts to public health and safety, potential measures to mitigate those impacts (Pub. Resources Code, section 25519), and compliance with applicable governmental laws or standards (Pub. Resources Code, section 25523 (d)).

The Energy Commission's siting regulations require staff to independently review the AFC and assess whether the list of environmental impacts contained is complete, and whether additional or more effective mitigation measures are necessary, feasible and available (Cal. Code Regs., tit. 20, sections 1742 and 1742.5(a)). Staff's independent review shall be presented in a report (Cal. Code Regs., tit. 20 , section 1742.5).

In addition, staff must assess the completeness and adequacy of the health and safety standards, and the reliability of power plant operations (Cal. Code Regs., tit. 20, section 1743(b)). Staff is required to coordinate with other agencies to ensure

that applicable laws, ordinances, regulations and standards are met (Cal. Code Regs., tit. 20, section 1744(b)).

Staff conducts its environmental analysis in accordance with the requirements of the California Environmental Quality Act. No Environmental Impact Report (EIR) is required because the Energy Commission's site certification program has been certified by the Resources Agency (Pub. Resources Code, section 21080.5 and Cal. Code Regs., tit. 14, section 15251 (k)). The Energy Commission acts in the role of the CEQA lead agency and is subject to all other portions of CEQA.

The staff typically prepares both a preliminary and final staff assessment. The PSA presents for the applicant, intervenors, agencies, other interested parties and members of the public, the staff's preliminary analysis, conclusions, and recommendations.

Staff uses the PSA to resolve issues between the parties and to narrow the scope of adjudicated issues in the evidentiary hearings. During the period between publishing the PSA and the FSA, staff will conduct one or more workshops in Morro Bay to discuss their findings, proposed mitigation, and proposed compliance monitoring requirements. Based on the workshops and written comments, staff will refine their analysis, correct errors, and finalize conditions of certification to reflect areas where we have reached agreement with the parties. Responses to written comments on the PSA will be included in the FSA. The FSA serves as staff's testimony on a proposal.

The staff's assessment is only one piece of evidence that will be considered by the Committee (two commissioners who have been assigned to this project) in reaching a decision on whether or not to recommend that the full Energy Commission approve the proposed project. At the public hearings, all parties will be afforded an opportunity to present evidence and to rebut the testimony of other parties, thereby creating a hearing record on which a decision on the project can be based. The hearing before the Committee also allows all parties to argue their positions on disputed matters, if any, and it provides a forum for the Committee to receive comments from the public and other governmental agencies.

Following the hearings, the Committee's recommendation to the full Energy Commission on whether or not to approve the proposed project will be contained in a document entitled the Presiding Members' Proposed Decision (PMPD). Following publication, the PMPD is circulated for a minimum of 30 days in order to receive written public comments. At the conclusion of the comment period, the Committee may prepare a revised PMPD. A revised PMPD is required to undergo a 15-day comment period. At the close of the comment period for the revised PMPD, the PMPD is submitted to the full Energy Commission for a decision. Within 30 days of the Energy Commission decision, any party may appeal the decision to the Energy Commission.

A Compliance Monitoring Plan and General Conditions will be assembled from conditions contained in the PSA and other evidence presented at the hearings. The Compliance Monitoring Plan and General Conditions will be presented in the PMPD. The Energy Commission staff's implementation of the plan ensures that a certified facility is constructed, operated, and closed in compliance with the conditions adopted by the Energy Commission. Staff's proposed Compliance Monitoring Plan and General Conditions are included at the end of the PSA.

PROJECT DESCRIPTION

Kae C. Lewis

NATURE AND PURPOSE OF PROJECT

On October 23, 2000 Duke Energy Morro Bay LLC filed an Application for Certification (AFC) seeking approval from the California Energy Commission (Energy Commission) to construct and operate the proposed net 1,200 megawatt (MW) natural-gas fired, combined cycle, combustion turbine Morro Bay Power Plant Project. (Note that this nominal rating is based upon preliminary design information and generating equipment manufacturers' guarantees. The project's actual generating capacity will differ from, and likely exceed, this figure. If the project's actual generating capacity should exceed this nominal rating, no conditions of certification will be violated.) The project will add an additional net 198 MW to be generated at the site of the current net 1,002 MW Morro Bay Power Plant.

PROJECT LOCATION

The "modernization" Project is proposed to be located at the existing 107-acre Morro Bay Power Plant site that is owned and operated by Duke Energy. The project site is located within the City of Morro Bay, San Luis Obispo County, near Morro Bay Harbor, bordered on the west by Embarcadero Road and on the east by Highway 1. See **PROJECT DESCRIPTION Figures 1 and 2** for the regional and local vicinity setting of the project. Construction laydown is expected to take place in both on-site and off-site areas (the latter not determined at the time of the PSA publication date).

PROJECT DESCRIPTION

The new units will replace currently operating generation Units 1 and 2 (326 megawatts [MW], 1950's technology) and Units 3 and 4 (676 megawatts [MW], 1960's technology) with two state-of-the-art 600 MW combined cycle units. Each new unit will be capable of producing 600 MW, so that upon completion, the Plant will be capable of producing a total of 1,200 MW. Each new unit will consist of two gas-fired turbines and one steam turbine driven by the heat produced by the other two turbines. Each new unit will have two, 145 foot tall stacks compared with the existing plant's three 450 foot tall stacks. See **PROJECT DESCRIPTION Figures 3 and 4** for the project site map and layout of the proposed Morro Bay Power Plant project.

The new units are expected to be used for intermediate load operations. The units' duct-fired design enables approximately 84 MW of additional peak capacity per combined cycle unit when required by the electrical system or market conditions. To control emissions of air pollutants, the MBPP's combined cycle units will use the best available control technology (BACT) including the selective catalytic reduction (SCR) for control of nitrogen oxides (Nox) and an oxidation catalyst for control of

carbon monoxide. The SCR system consists of the reduction catalyst and an aqueous ammonia injection system.

NATURAL GAS PIPELINE

Natural gas will be delivered from Pacific Gas and Electric Company through pipeline 306 which was built for units 1-4. Pipeline 306, which is 20 inches in diameter, runs south from the Kettleman Compressor Station to Morro Bay. Natural gas at Kettleman originates from the south with El Paso Natural Gas in Arizona and from the north with PG&E/Northwest in Oregon. The project will require a new natural gas tie-in that is to be located onsite east of the existing natural gas regulating station and metering station.

WATER SUPPLY AND WASTEWATER

The combined cycle units are expected to use a maximum of 475 million gallons per day (gpd) of seawater for cooling and boiler makeup which is a reduction of 29 percent from the existing plant's usage. The cooling water intake is proposed to continue at its existing location on Morro Bay although the intake building will be architecturally modified. The cooling water is discharged to the Pacific Ocean through a canal outfall entering Estero Bay, north of Morro Rock. MBPP's freshwater usage will be about 10,000 gpd for routine operation from its onsite wells. For short term maintenance activities more than 80,000 gpd may be used. Wastewater streams consist of sanitary uses, process wash and stormwater. Some components of these streams will require treatment before disposal in the discharge outfall or local sewer system.

TRANSMISSION LINE FACILITIES

The MBPP will continue to interconnect with the electrical grid at the Pacific Gas & Electric Company's existing 230 kV switchyard located on the plant site. No new electric transmission lines will be required.

DEMOLITION, CONSTRUCTION AND OPERATION

Duke Energy proposes construction of two the new generating units in a single construction phase lasting 21 months, with initial start-up to follow one month later. Based on construction beginning in early 2002, commercial operation will begin in mid-2004. The capital cost of the Morro Bay Power Plant project is expected to be $650 million.

The Project will include demolition of the on site fuel oil tank farm, all existing power plant equipment (boiler–steam turbine complex), and removal of three 450 feet tall exhaust stacks. Stage one: demolition of the tank farm will take three months and be complete in 2002. Stage two: demolition of the three 450 foot stacks will begin after commercial operation of the new units and will be complete in 2004. Stage three: existing units will be dismantled by the end of 2007.

The construction force necessary for the three construction stages are expected to be as follows: Stage I, beginning in early 2002 and taking 3 months, will require an average of 35 workers. Stage II, beginning in 2002 and taking 21 months, will require roughly 900 workers during the peak months and 400 on average. Stage III, beginning in 2003-2004 and taking 47 months, will require 100 workers during the peak months and 40 on average. Once the new units are on line, the operational staff required is expected to be about 75 employees.

A series of traffic, landscaping and aesthetic Project features are also proposed including Class I and II bike paths, installation of a bridge across Morro Creek, appropriate landscaping, and refurbishment of the cooling water intake structure on Morro Bay.

ENVIRONMENTAL ASSESSMENT

AIR QUALITY

Magdy Badr

INTRODUCTION

This analysis addresses the potential air quality impacts resulting from criteria air pollutant emissions created by the construction and operation of the Morro Bay Power Plant Project. Criteria air pollutants are those for which a state or federal standard have been established. They include nitrogen dioxide (NO2), sulfur dioxide (SO2), carbon monoxide (CO), ozone (O3) and its precursors nitrogen oxides (NOx) and volatile organic compounds (VOC), and particulate matter less than 10 and 2.5 microns in diameter (PM10 and PM2.5) and their precursors (NOx, VOC, and SOx.)

In carrying out its analysis, the California Energy Commission staff evaluates the following:

- whether the Morro Bay Power Plant Project is likely to conform with applicable Federal, State, and San Luis Obispo County Air Pollution Control District (District) air quality laws, regulations and standards, as required by Title 20, California Code of Regulations, sections 1744(b) and 1744.5 (b),
- whether the Morro Bay Power Plant Project is likely to cause significant air quality impacts, including new violations of ambient air quality standards or contributions to existing violations of those standards, as required by Title 20, California Code of Regulations, sections 1742(b) and 1742.5 (b), and
- whether the mitigation proposed for the Morro Bay Power Plant Project is adequate to lessen the potential impacts to a level that is less than significant, as required by Title 20, California Code of Regulations, section 1742(b), and 1742.5(a).

LAWS, ORDINANCES, REGULATIONS AND STANDARDS

FEDERAL

The federal Clean Air Act requires any new major stationary sources of air pollution and any major modifications to major stationary sources to obtain an air pollution permit before commencing construction. This process is known as New Source Review (NSR). Its requirements differ depending on the attainment status of the area where the major facility is to be located. Prevention of Significant Deterioration (PSD) requirements apply in areas that are in attainment of the national ambient air quality standards. The non-attainment area NSR requirements apply to areas that have not been able to demonstrate compliance with national ambient air quality standards. The entire program, including both PSD and Non-attainment NSR permit reviews, is referred to as the federal NSR program.

Title V of the federal Clean Air Act requires states to implement and administer an operating permit program to ensure that large sources operate in compliance with the requirements included in the Code of Federal Regulations 40, part 70. A Title V permit contains all of the requirements specified in different air quality regulations which affect an individual project.

The U.S. Environmental Protection Agency (EPA) has reviewed and approved the District regulations and has delegated to the District the implementation of the Title V and NSR programs. The District implements these programs through its own rules and regulations, which are, at a minimum, as stringent as the federal regulations. However, PSD analysis will be performed by the EPA staff.

STATE

The California State Health and Safety Code, Section 41700, requires that "no person shall discharge from any source whatsoever such quantities of air contaminants or other material which causes injury, detriment, nuisance, or annoyance to any considerable number of persons or to the public, or which endanger the comfort, response, health, or safety of any such person or the public, or which causes, or have a natural tendency to cause, injury or damage to business or property."

The state's Air Resources Board (ARB) promulgates state-level ambient air quality standards, which are, in general, more stringent than the national ambient air quality standards. Table 6.2-8 in the Application for Certification (AFC) presents a summary of the current national and state ambient air quality standards.

LOCAL

As part of the Energy Commission's licensing process, in lieu of issuing a construction permit to the applicant for the Morro Bay Power Plant Project , the District will prepare and present to the Commission a Determination of Compliance (DOC). The DOC will evaluate whether and under what conditions the proposed project will comply with the District's applicable rules and regulations, as described below. The Energy Commission staff will coordinate its air quality analysis with the District staff as they prepare the DOC, will review and comment on the Preliminary DOC to identify any issues of concern, and will incorporate the Final DOC recommended conditions of certification in its Final Staff Assessment. The project is subject to the following District major rules.

DISTRICT RULE NO. 113 - CONTINUOUS EMISSIONS MONITORING (CEM)

The requirements of this Rule are applicable to all the combustion equipment contained in these applications. CEMs will be installed, calibrated, maintained, and operated in accordance with EPA standards.

DISTRICT RULE NO. 203 - APPLICATIONS

Duke Energy prepared a separate application for the Morro Bay Power Plant Project including each permit unit and utilized the District's permit application forms as required by this Rule.

DISTRICT RULE NO. 204 – REQUIREMENTS

An Application for an Authority to Construct (ATC) can not be granted unless the new unit is equipped with the current Best Available Control Technology (BACT) for all air contaminants and can comply with all BACT, offsets, and operation requirements.

DISTRICT RULE NO. 216 – FEDERAL PART 70 PERMITS

This rule specifies the requirements and procedures by which a specific source, such as the proposed project, may obtain a Federally enforceable operating permit in accordance with the requirements of Part 70 to Title 40 of the Code of Federal Regulations (CFR).

DISTRICT RULE NO. 217 – FEDERAL PART 72 PERMITS

The provisions of this Rule shall apply to any acid rain source, as defined in 40 CFR Part 72.

DISTRICT RULE NO. 403 – PARTICULATE MATTER EMISSION STANDARDS

A person shall not discharge into the atmosphere from any source particulate matter in excess of 0.3 grains per cubic foot of dry gas at standard conditions.

DISTRICT RULE NO. 404 – SULFUR COMPOUNDS EMISSION STANDARDS, LIMITATIONS AND PROHIBITIONS

A person shall not discharge elemental sulfur into the atmosphere from any new or modified recovery unit producing, effluent gas containing more than; a) 0.2 percent by volume of sulfur compounds calculated as sulfur dioxide, b) 10 ppm by volume of hydrogen sulfide, c) 200 pounds per hour of sulfur compounds calculated as sulfur dioxide.

DISTRICT RULE NO. 405 – NITROGEN OXIDES EMISSION STANDARDS AND LIMITATIONS

A person shall not build, erect, install or expand any non-mobil burning equipment unit unless the discharge into the atmosphere does not exceed 140 pounds per hour of nitrogen dioxide.

DISTRICT RULE NO. 406 – CARBON MONOXIDE EMISSION STANDARDS AND LIMITATIONS

A person shall not discharge into the atmosphere carbon monoxide in concentration exceeding 2000 ppm by volume measured on a dry basis.

DISTRICT RULE NO. 601 – NEW SOURCE PERFORMANCE STANDARDS (NSPS)

This Rule applies to all new, modified or reconstructed stationary sources of air pollution. The most stringent provision shall apply whenever any source is subject to more than one rule, regulation, provision, or requirement relating to the control of any air contaminant.

ACID RAIN

The Morro Bay Power Plant Project will be subject to the requirements of Title IV of the federal Clean Air Act. The requirements of the Acid Rain Program are outlined in 40 CFR Part 72. The specifications for the type and operation of continuous emission monitors (CEMs) for pollutants that contribute to the formation of acid rain are given in 40 CFR Part 75. District Rule 217 incorporates by reference the provisions of 40 CFR Part 72. Pursuant to 40 CFR Part 72.30(b)(2)(ii), Morro Bay Power Plant Project must submit an Acid Rain Permit Application to the District at least 24 months prior to the date on which each unit commences operation. Pursuant to 40 CFR Part 72.2, “commence operation” includes the start-up of the unit’s combustion chamber.

SETTING

METEOROLOGY AND CLIMATE

The project site is dominated by the semi-permanent Pacific high pressure system centered off the coast of California. During the summer months, the high pressure moves to the north, which mostly results in a strong inversion and clear skies inland. The summer is typically mild with little precipitation. The onshore airflow typical in the summer over the cool ocean waters results in the fog and clouds common along the Northern California coast.

During the winter months, the high pressure moves towards the southwest which allows storms originating in the Gulf of Alaska to reach northern California. Most of the annual rainfall, ranging from 10 to 30 inches, occurs between November and March. During the winter, winds from the east are more frequent, resulting from land temperature being cooler than the ocean temperatures. Annual wind roses can be found in the Application for Certification.

Temperatures at the site are moderated by the proximity of the ocean. In the summer, daily temperatures ranges between the low 50s to mid-70s degrees Fahrenheit. In the winter, the daily temperatures average lows are about 42 and the average highs are 60 degrees Fahrenheit.

Along with the winds, another climatic factor is atmospheric stability and mixing height. Atmospheric stability is an indicator of the air turbulence and mixing. During the daylight hours of the summer when the earth is heated and air rises, there is more turbulence, more mixing and thus less stability. During these conditions, there is more air pollutant dispersion and therefore usually fewer air quality impacts from a single air pollution source. During the winter months between storms, very stable

atmospheric conditions can occur, resulting in very little mixing. Under these conditions, little air pollutant dispersion occurs, and consequently higher air quality impacts can result from stationary and mobile source emissions. Mixing heights are generally lower during the winter, along with lower mean wind speeds and less vertical mixing. For the Morro Bay Power Plant Project, the nearest upper level meteorological station is Vandenburg Air Force Base, which is located 45 miles southeast of the project site and 3 miles from the coast. The data from that station show that during the summer and fall months, the mixing heights vary between 900 to 1450 feet, and 1700 to 3900 feet in the winter and spring months. That is because of higher wind on the coast during the winter than summer.

EXISTING AIR QUALITY

The Federal Clean Air Act and the California Clean Air Act both require the establishment of allowable maximum ambient concentrations of air pollutants, called ambient air quality standards (AAQS). The state AAQS, established by CARB, are typically lower (more protective) than the federal AAQS, which are established by the federal Environmental Protection Agency (USEPA). The state and federal air quality standards are listed in **AIR QUALITY Table 1**. As indicated in **AIR QUALITY Table 1**, the averaging times for the various air quality standards (the duration over which they are measured) range from one-hour to an annual average. The standards are read as a concentration, in parts per million (ppm), or as a weighted mass of material per a volume of air, in milligrams or micrograms of pollutant in a cubic meter of air (mg/m^3 and $\mu g/m^3$).

In general, an area is designated as attainment for a specific pollutant if the measured concentrations of that air contaminant do not exceed the standard. Likewise, an area is designated as non-attainment for an air contaminant if that standard is violated. Where not enough ambient data are available to support designation as either attainment or non-attainment, the area can be designated as unclassified. Unclassified areas are normally treated the same as attainment areas for regulatory purposes. An area can be attainment for one air contaminant while non-attainment for another, or attainment for the federal standard and non-attainment for the state standard for the same contaminant. The entire area within the boundaries of a district is usually evaluated to determine the district's attainment status.

The Morro Bay Power Plant Project is located on the site of the existing MBPP facility, in the city of Morro Bay between State Highway 1 and the Pacific ocean. The District collects ambient air quality data at monitoring sites throughout the air basin. The data is used to determine attainment status and define air quality trends. This area is designated attainment for the state's CO, NO2, SO2, and SO4 standards, and attainment for the federal SO2, CO, and NO2 standards (ARB 1999). Pages 6.2-16 to 6.2-22 of the AFC presents details of the air quality trends in the project air basin.

AIR QUALITY Table 1
Federal and State Ambient Air Quality Standards

Pollutant	Averaging Time	Federal Standard	California Standard
Ozone (O3)	1 Hour	0.12 ppm (235 μg/m^3)	0.09 ppm (180 μg/m^3)
Carbon Monoxide (CO)	8 Hour	9 ppm (10 mg/m^3)	9 ppm (10 mg/m^3)
	1 Hour	35 ppm (40 mg/m^3)	20 ppm (23 mg/m^3)
Nitrogen Dioxide (NO2)	Annual Average	0.053 ppm (100 μg/m^3)	---
	1 Hour	---	0.25 ppm (470 μg/m^3)
Sulfur Dioxide (SO2)	Annual Average	80 μg/m^3 (0.03 ppm)	---
	24 Hour	365 μg/m^3 (0.14 ppm)	0.04 ppm (105 μg/m^3)
	3 Hour	1300 μg/m^3 (0.5 ppm)	---
	1 Hour	---	0.25 ppm (655 μg/m^3)
Respirable Particulate Matter (PM10)	Annual Geometric Mean	---	30 μg/m^3
	24 Hour	150 μg/m^3	50 μg/m^3
	Annual Arithmetic Mean	50 μg/m^3	---
Suspended Particulate Matter (PM2.5) (Not in effect yet)	Annual Arithmetic Mean		15μg/m^3 3-year average
	24 Hour		65μg/m^3 3-year average of 98th percentile
Sulfates (SO_4)	24 Hour	---	25 μg/m^3
Lead	30 Day Average	---	1.5 μg/m^3
	Calendar Quarter	1.5 μg/m^3	---
Hydrogen Sulfide (H_2S)	1 Hour	---	0.03 ppm (42μg/m^3)
Vinyl Chloride (chloroethene)	24 Hour	---	0.010 ppm (26 μg/m^3)
Visibility Reducing Particulates	1 Observation	---	In sufficient amount to produce an extinction coefficient of 0.23 per kilometer due to particles when the relative humidity is less than 70 percent.

AMBIENT OZONE

Ozone is not directly emitted from stationary or mobile sources, but is formed as the result of chemical reactions in the atmosphere between directly emitted air pollutants. In the presence of sunlight (ultraviolet radiation), Nitrogen oxides (NOx) and hydrocarbons (Volatile Organic Compounds [VOCs]) interact to form ozone. The reaction can take several hours to occur, so ozone generally forms downwind and/or lags the timing of the emissions peaks.

AIR QUALITY Table 2 summarizes the best representative ambient air quality data collected from three different monitoring stations close to the project site. The Morro Bay Monitoring Station is located in the city of Morro Bay where the project will be constructed. San Luis Obisbo Monitoring Station is located Southeast of the proposed project location. Atascadero Monitoring Station is located Northeast of the proposed project location. All three Monitoring Stations are capable of gaseous and particulate monitoring.

Generally, the ozone formation is high in the summer time and low in the winter time. The Project site air basin is classified as a nonattainment area for ozone because it violates California Ambient Air Quality Standards (CAAQS) and in 1996 and 1998 the National Ambient Air Quality Standards (NAAQS). The table also shows the maximum hourly concentration and the number of days above the State standards.

AIR QUALITY Table 2
South Central Coast
1-hour Ozone Ambient Air Quality Data (ppm)

Monitoring Station	1-hour Measurements	1994	1995	1996	1997	1998
Morro Bay	Max. concentration (ppm)	0.06	0.07	0.07	0.06	0.07
	# days exceed State standard	0	0	0	0	0
San Luis Obispo	Max. concentration (ppm)	0.10	0.11	0.14	0.09	0.13
	# days exceed State standard	2	7	14	0	25
Atascadero –Lewis Ave	Max. concentration (ppm)	0.1	0.097	0.11	0.9	0.097
	# days exceed State standard	2	1	7	0	2
California Ozone Ambient Air Quality Standard(CAAQS): 0.09 ppm (1-hour average) National Ozone Ambient Air Quality Standard (NAAQS): 0.12 ppm (1-hour average)						

Source: ARB 1999

AMBIENT PM10

PM10 can be emitted directly or it can be formed many miles downwind from emission sources when various precursor pollutants interact in the atmosphere. Gaseous emissions of pollutants like NOx, Sox, and VOC from turbines, and NH3 from NOx control equipment can, given the right meteorological conditions, form particulate matter known as nitrates (NO3), sulfates (SO4), and organics. These pollutants are known as secondary particulates, because they are not directly emitted but are formed through complex chemical reactions in the atmosphere. As Table 3 indicates, the project area experiences a number of violations of the state 24-hour PM10 standard.

PM nitrate (mainly ammonium nitrate) is formed in the atmosphere from the reaction of nitric acid and ammonia. Nitric acid in turn originates from NOx emissions from combustion sources. The nitrate ion concentrations during the winter time are a significant portion of the total PM10 and should be even a higher contributor to particulate matter of less than 2.5 microns (PM2.5). The nitrate ion is only a portion of the PM nitrate, which can be in the form of ammonium nitrate (ammonium plus nitrate ions) and sodium nitrate. The EPA is in the process of revising the draft

criteria document at this time to implement the PM2.5 standard. After EPA's evaluation and designation of the District's coverage area, the District will have three years to complete the State Implementation Plan (SIP) and demonstrate how it will reach attainment.

AIR QUALITY Table 3
South Central Coast
24-hour PM10 Ambient Air Quality (µg/m3)

Monitoring Station	Standard	1993	1994	1995	1996	1997	1998
Morro Bay	Highest 24-hour measurements	64	48	40	42	57	33
	# of days above	2	0	0	0	6	0
San Luis Obispo	Highest 24-hour measurements	141	78	73	98	99	70
	# of days above	1	1	1	0	2	0
Atascadero – Lewis Ave	Highest 24-hour measurements	57	78	51	39	55	32
	# of days above	5	1	2	0	1	0

- PM10 measurements only occur every 6 days, so the actual number of days that violate the standard can be 6 times greater than the number shown here.
- CAAQS is 50 (µg/m3)

Sources: ARB 1999, District 1999a

PROJECT DESCRIPTION

CONSTRUCTION PHASE

The construction phase includes the demolition of the existing fuel storage tanks which is expected to take three months. MBPP is planning to utilize the existing ancillary facilities (i.e., roads, transmission lines, and pipelines for reclaimed water, natural gas, and water). Any new required ancillary facilities will be limited to the project site and will not extend out side the fence line. The construction of the proposed power plant will result in temporary emissions for approximately 20 months. All construction scheduling is based on a 40-hour work week. The construction activities will include site preparation including cleaning, grading and excavation for the foundation. After the site preparation is completed, the construction of the foundations will follow. Installations and assembly of the major equipment will begin soon after the foundation work is completed.

Fugitive dust will be emitted primarily during the site preparation, grading and excavation, as a result of travelling on the unpaved surfaces and during the loading and unloading of soil from/to the site. Criteria pollutants also will be emitted during the construction of the project from combustion emissions. These emissions are primarily exhaust from the diesel construction equipment used in all phases of the

site preparation, exhaust from water trucks, welding equipment, workers vehicles, delivery trucks, generators and compressors.

Appendix 6.2-5 in the AFC presents detailed construction emission estimates for fugitive dust, PM10, NO_x, CO, SO_x, and VOC emissions from vehicles. Staff believes that the Applicant used the correct assumptions to calculate the fugitive dust and emission factors used to calculate the equipment emissions. It is important to understand that construction estimated emissions are temporary, unavoidable and speculative. Detailed activity data can not be forecasted accurately and the emission factors used in these estimations are known to be worst case estimates. Therefore, the air emissions associated with the construction activities and their impact should be conservative.

COMMISSIONING AND OPERATIONAL PHASES

"Commissioning" is the technical term used to describe, in general, all the initial operations of the power plant once it has been physically installed but is not yet in commercial operation. Commissioning starts with the first firing of fuel in the GT/HRSG or in the auxiliary boilers. During commissioning the control systems are tested, the burners are tuned up, the inside and outside of tubes are cleaned up, and the control systems are installed after determining that there are no contaminants in the GT/HRSG that may damage the surfaces of the catalysts. During the commissioning period, which can last for several months, the power plant may or may not operate without emission controls. Commissioning ends with the start of commercial operation, which is usually signaled by the issuance of the Permit to Operate (PTO) from the local air district.

The existing facility at Morro Bay consists of four boilers and generates approximately 1002 MW. The proposed facility will have two, combined-cycle. Each combined cycle is 600 MW and is equipped with two gas turbines rated180 MW each, one heat recovery steam generator (HRSG) and a duct burner which will provide steam to the steam generator, and one steam turbine that generates 240 MW.

The Applicant expects that each turbine will run for 8400 hours during the year. Of those 8400 hours of operation, each turbine may have up to 400 hours of starting up or shutting down. Each duct burner burns 291 MMBtu/hour and may operate up to 16 hours per day and 4000 hours per year. Also, each combined cycle will be equipped with a CO catalyst to control CO and also reduces VOC emissions, and a Selective Catalytic Reduction (SCR) to control NOx emissions. Seawater will be used instead of cooling towers for this project.

The Morro Bay Power Plant Project will burn only natural gas, with no provisions for an alternative backup fuel. The exclusive use of natural gas, an inherently clean fuel, compared to oil or coal, will limit the formation of VOC, PM10, and SO_x emissions. The combustion turbines will be equipped with dry low-NOx combustors and SCR technology to minimize NO_x formation. Continuous emissions monitoring system (CEMs) will be required and installed to closely monitor NOx, CO and O2 levels. The proposed project's hourly, daily and annual emissions are presented in

Air Quality Table 4. MBPP is utilizing the existing emergency generator and the fire pump engines in the new facility. The air emissions associated with these engines are not included in the emission estimates of the new facility. Due to the large combustion turbines used in this project and the need to control NO_x emissions, significant amounts of ammonia will be injected into the flue gas stream as part of the SCR system. Not all of this ammonia will mix with the flue gases to reduce NO_x; a portion of the ammonia will pass through the SCR and will be emitted unaltered, out the stacks. These ammonia emissions are known as ammonia slip. The applicant has committed to an ammonia slip no greater than 5 ppm or 14.4 lb/hour. In actual operation, staff expects that an ammonia slip concentration of 1 ppm or less for the proposed facility. MBPP will utilize the existing fire pump and the emergency unit from the old facility in the new facility. MBPP is not planning on increasing or decreasing the number of operating hours for these units. The air emissions associated with these units are part of the background. There will not be any net increase of air emissions from these units.

AIR QUALITY Table 4
Maximum Project Emissions

	NO_x	CO	VOC	PM10	SO_x
GT (lb/hr)[1]	16.72	24.41	2.71	11.00	1.30
GT w/ duct burner (lb/hr)[1]	19.32	28.26	5.39	13.30	1.45
Start-up Emission Levels(lb/hr) [1]	80	620	16.0	11.0	1.5
Total Facility Daily Emissions (lb/day) [2]					
	2,784	12,119	644	1,203	134.4
Total Facility Annual Emissions (Ton/year) [3]					
	292.3	917.4	77.6	203.2	23.0

GT : gas Turbine. All gas turbines have the same air emission profile.
1. All gas turbines have the same start-up emissions and the same hourly emissions.
2. Daily emissions are based on 2 turbines each starting up for 3 hours and one hour shutting down for one hour, then operating at full load (100% load) for 4 hours each, other two turbines at full operation for 8 hours each. The duct burners are operating for 16 hours per day for each of the four turbines.
3. Annual emissions are based on 8400 hours per turbine per year, with 400 out of the 8400 identified for start up or shut- down, and 4000 hours per duct burner per year for each combined cycle.

Source: Section 6.2 and Appendix 6.2-1 of the AFC.

FACILITY DEMOLITION

MBPP is planning to remove two large tanks out of the existing site in Morro Bay and build the new facility (the proposed project). The new facility will replace the currently operating generation units 1 through 4. Just prior to the completion of the construction of the new facility, MBPP will shut down the existing units 1 through 4 to tie in the existing infrastructure and in the preparation for demolition of the existing facility. MBPP is planning to remove the existing facility including the generation units and the oil tanks and existing stacks by the end of year 2007. The demolition activities are part of this project. The type of the air emissions

associated with the demolition activities are similar to air emission associated with the construction activities and include fugitive dust and air emissions from the heavy and light equipment will be emitted. These emissions and their potential impacts are analyzed in the Data Responses dated February 9, 2001. **Air Quality Table 4-A** summarizes the annual emissions during the demolition in tons per year.

AIR QUALITY Table 4-A
Annual Emissions During Demolition Activities (Tons/year)

	NOx	CO	VOC	Sox	PM10
Onsite Demolition Equipment, Fugitive Dust	16.1	52.7	3.6	0.3	3.3
Offsite Workers travel, Trucks and Rail deliveries	4.8	16.1	1.5	0.2	0.3
Total Emissions	**2.09**	**68.8**	**5.1**	**0.5**	**3.6**
Source: Data Responses dated February 9, 2001					

FACILITY CLOSURE

Eventually the MBPP will close, either as a result of the end of its useful life, or through some unexpected situation, such as a natural disaster or catastrophic facility breakdown. When the facility closes, all sources of air emissions would cease and thus all impacts associated with those emissions would no longer occur.

The Permit to Operate, issued by the District, is required for operation of the facility and is usually renewed on a five year schedule. However, during those five years, the applicant must still pay permit fees annually. If the applicant chooses to close the facility and not pay the permit fees, then the Permit to Operate would be cancelled. In that event, the project could not restart and operate unless the applicant pays the fees to renew the Permit to Operate.

If the MBPP were to decide to dismantle the project, there would likely be fugitive dust emissions associated with this dismantling effort. The Facility Closure Plan to be submitted to the Energy Commission Compliance Project Manager should indicate that the applicant will comply with the applicable construction related permit conditions included in the Conditions of Certification, which includes the control of fugitive dust emissions.

PROJECT INCREMENTAL IMPACTS

The air quality impacts assessment of project construction and operation are shown in the following sections. Staff has reviewed the modeling protocol and the analysis of the proposed project during construction and operation and find them acceptable.

MODELING APPROACH

The Applicant used the SCREEN model to select the worst case turbine configuration that would produce the highest emission impacts. The SCREEN model, which is approved by EPA, is designed to provide conservative estimates of

emission impacts. Based on the results of the SCREEN model, the Applicant modeled the four gas turbines and HRSGs configuration, using the EPA approved Industrial Source Complex (ISC) model for more refined modeling analysis.

CONSTRUCTION IMPACTS

The Applicant estimated the impacts of construction-related emissions using the ISC model. **AIR QUALITY Table 5** provides a summary of the maximum estimated impacts. The modeling results indicate that the construction-related emissions under worst conditions would not cause violations of the one hour NO_2 standard. However, the impact of the daily and annual PM10 emissions will violate the standards. The worst case conditions are defined as the highest emissions of a particular pollutant during a one month period, converted to a gram per second emission rate for the model. It is important to note that these are temporary impacts that would only occur during the construction phase of the project, and they reflect the implementation of some construction related mitigation measures which will be included in the conditions of certification proposed by Energy Commission staff to minimize emissions.

As **AIR QUALITY Table 5** shows, construction activities would cause a violation of the state 24-hour and annual average PM10 standards. In reviewing the modeling output files, the project's construction impacts are not occasional or isolated events, but are over an area within a few hundred meters of the project site. These predicted impacts are of such a high magnitude for a number of reasons.

AIR QUALITY Table 5
Maximum Estimated Construction-Related Incremental Impacts

Pollutant	Averaging Time	Facility Maximum Impact ($\mu g/m^3$)	Maximum Background ($\mu g/m^3$)	Maximum Total Impacts ($\mu g/m^3$)	State Limiting Standard ($\mu g/m^3$)	Federal Limiting Standard ($\mu g/m^3$)	Percent of Standard (%)
NO_2	1-hour	346.8	122	469	470		99.8
	Annual	31.1	25	56.1	-	100	56.1
CO	1-hour	6464.6	6988	13453	23000	40000	58.5
	8-hour	3488.6	3444	6933	10000	10000	69.3
PM10	24-hour	116.6	57	173.6	50	150	347
	Annual	35.3	20.6	55.9	30	-	186
SO_2	1-hour	99.7	106	205.7	650	-	31.6
	24-hour	20.8	13	33.8	109	365	31
	Annual	4.7	0	4.7	-	80	5.9

Source: AFC Appendix 6.2-5, Data responses March 9, 2001.

First, some of the sources of combustion emissions (the bulldozers and trucks) are mobile sources, not stationary sources as input into the model. Therefore, as mobile sources, the air quality impacts would not always be at the same locations, so the model results are overstated. Second, it was assumed that all the equipment identified for the modeling evaluation would be running simultaneously. It is doubtful that all the major equipment would all be operating at one time, and thus the impacts are overstated.

Finally, the emissions inputs to the model were from the highest monthly emissions assumed during the 20 months construction period. During the other months of construction work, considerably less emissions generating equipment will be used and thus the impacts will be lower.

FUMIGATION IMPACTS

During the early morning hours before sunrise, the air is usually very stable. During such stable meteorological conditions, emissions from elevated stacks rise through this stable layer and are dispersed. When the sun first rises, the air at ground level is heated, resulting in a vertical (both rising and sinking air) mixing of air for a few hundred feet or so. Emissions from a stack that enter this vertically mixed layer of air will also be vertically mixed, bringing some of those emissions down to ground level. Later in the day, as the sun continues to heat the ground, this vertical mixing layer becomes higher and higher, and the emissions plume becomes better dispersed. The early morning air pollution event, called fumigation, usually lasts approximately 30 to 90 minutes. The applicant used the SCREEN3 model, which is an EPA approved model, for the calculation of fumigation impacts. NO2, CO and SO2 levels are at their highest during start-up. The results of the modeling analyses show that fumigation impacts will not violate the NO2, CO or SO2 1-hour standards.

Another type of fumigation is referred to as shoreline fumigation. In general, land surfaces tend to heat up and cool down faster than water. Shoreline fumigation tends to occur during sunny days when the cooler air over the water displaces the warmer air and lighter air over the land. The unstable air over the land will increase gradually in depth with inland distance during the land sea breeze. The stable air over the water, unstable air over the land and wind speed determine if the plume will go down to the ground before much dispersion. The SCREEN3 model was used to measure this condition's impacts. The results are summarized in **AIR QUALITY Table 6**. The start-up modeling impact includes one turbine in start-up mode and one turbine at maximum load with duct burners firing. This assumption is not consistent with the maximum daily operating scenario.

AIR QUALITY Table 6
CTG Fumigation Modeling Maximum 1-Hour Impacts

Pollutant	Averaging Time	Fumigation Impact ($\mu g/m^3$)	Start-up Impact ($\mu g/m^3$)	Shoreline Fumigation	Background ($\mu g/m^3$)
NO2	1-hour	13.3	185.9	105.1	470
CO	1-hour	19.5	8615.4	153.6	23000
SO2	1-hour	1.03	11.9	8.1	650
PM10	24-hour	3.6	-	4.6	30

OPERATIONAL IMPACTS

The impact of the operation of the facility has been assessed using EPA-approved air quality dispersion models and guidelines without considering the offsets that will be provided. Staff finds the Applicant's analysis of the normal operational impact to be acceptable, however, as noted above, start-up modeling impacts were not

modeled consistent with the maximum daily operating scenario. Thus, these impacts may be higher. The AFC presents the refined ISC modeling analyses. The impact analyses were used to determine the worst case ground level impacts of the facility. The one hour start-up emissions were modeled to establish the highest impact from the project. The results show that the facility, by itself, does not violate the State or Federal ambient air quality standards for any pollutant. However, the PM10 impact from the facility, when added to the existing background levels, which are already above the State Standard, will further violate the 24 hour State Standard. Staff considers PM10 impact to be significant if left unmitigated. The applicant will mitigate the project's PM10 impact by providing emission offsets as discussed in the mitigation section below. **AIR QUALITY Table 7** presents a summary of the ISC modeling results for the proposed MBPP.

AIR QUALITY Table 7
ISC Modeling Results

Pollutant	Averaging Time	Facility Maximum Impact ($\mu g/m^3$)	Maximum Background ($\mu g/m^3$)	Maximum Total Impacts ($\mu g/m^3$)	State Limiting Standard ($\mu g/m^3$)	Federal Limiting Standard ($\mu g/m^3$)	Percent of Standard (%)
NO_2	1-hour	220.4	122	342.4	470		72.85
	Annual	2.6	25	27.6	-	100	27.6
CO	1-hour	8615.4	6988	15603.4	23000	40000	67.8
	8-hour	1508.3	3444	4952.3	10000	10000	49.5
PM10	24-hour	24.2	57	81.2	50	150	162
	Annual	2.7	20.6	23.2	30	-	77.3
SO_2	1-hour	17.3	106	123.3	650	-	19
	24-hour	2.7	13	15.7	109	365	14.4
	Annual	0.23	0	2.9	-	80	3.6
Source: AFC Section 6.2, Data responses March 9, 2001.							

SECONDARY POLLUTANT IMPACTS

OZONE IMPACTS

The proposed project's gaseous emissions, primarily NO_x and VOC, can contribute to the formation of ozone. There are air dispersion models that can be used to quantify ozone impacts, but they are only appropriate for use in regional air quality planning efforts where numerous sources are input into the model to determine the regional ozone impacts. There are no regulatory agency models approved for assessing single source ozone impacts. However, because of the known relationship of NO_x and VOC emissions to ozone formation, staff believes that the emissions of NO_x and VOC from MBPP do have the potential to contribute to higher ozone levels if not mitigated. MBPP NO_x and VOC contribution to the regional ozone problem is not considered to be significant, because the applicant has proposed to purchase emission reduction credits of NO_x and VOC to fully trade off and mitigate for the emission increases by the proposed facility.

SECONDARY PM_{10} IMPACTS

The project's NO_x, VOC, NH3 and SO_x emissions can contribute to the formation of secondary PM_{10}. Not all hydrocarbons (VOC) can form secondary PM_{10}.

Hydrocarbons with six or less carbon atoms in the chain will not participate in the formation of the carbon based PM_{10}. The project's VOC emissions will be in the form of unburned natural gas, which is mostly methane and ethane, which contain only one to two carbon atoms. Thus the turbine exhaust is not expected to emit any significant amount of VOC that can participate in the formation of secondary PM_{10}. Concerning ammonium nitrate, staff believes that the project 's ammonia emissions have a potential to contribute to the ammonium nitrate emissions downwind from the project. The chemical reaction between ammonia and NOx will take few hours before the formation of ammonium nitrate. Concerning sulfates as PM_{10}, staff believes that the project will contribute to sulfate levels in the area, although in a very small amount. Currently, there are no agency (EPA or CARB) recommended models or procedures for estimating sulfate formation. According to District Rules, the Applicant must provide mitigation to the net increases in SOx from the proposed facility.

VISIBILITY IMPACTS

The applicant has provided, as part of their PSD analysis a visibility impact analysis, which shows that the project is not expected to exceed any significant visibility impairment increment inside any nearby (San Rafael Wilderness) PSD Class I areas. Class I areas are areas of special national or regional value from a natural, scenic, recreational, or historic perspective.

DEMOLITION IMPACTS

MBPP has analyzed the impact from the demolition activities using the ISC model. To establish the impact during the demolition phase, MBPP has modeled the demolition activities by themselves without taking in consideration the emissions from the new turbines. Staff believes that the impact should take in account the emissions from the four new stacks and the emissions associated with the demolition activities.

CUMULATIVE IMPACTS

The Energy Commission staff provided the Applicant with a modeling protocol to conduct the cumulative impact analysis. The major component of the protocol required the Applicant to include in the modeling all known future projects that emit more than five tons per year of air emissions within six miles of the proposed facility. Then, the modeling results (impacts) would be added to the ambient background levels to establish the total impact. The District conducted a comprehensive review and determined that there are no planned facilities within the six miles that are eligible for modeling. Therefore, there is no cumulative impact from this project.

MITIGATION

APPLICANT'S PROPOSED MITIGATION

CONSTRUCTION PHASE

The applicant proposes that it would implement Best Available Control Measures (BACM) during construction of the project. These measures are listed below:

- Frequent watering of unpaved roads and disturbed areas (at least twice a day).
- Limit speed of vehicles on the construction areas to no more than 10 MPH.
- Employ tire washing and gravel ramps prior to entering a public roadway to limit accumulated mud and dirt deposited on the roads.
- Treat the entrance roadways to the construction site with soil stabilization compounds.
- Place sandbags adjacent to roadways to prevent run-off to public roadways.
- Install windbreaks at the windward sides of construction areas prior to the soil being disturbed. The windbreaks shall remain in place until the soil is stabilized or permanently covered.
- Employ dust sweeping vehicles at least twice a day to sweep the public roadways that are used by construction and worker vehicles.
- Sweep newly paved roads at least twice weekly.
- Limit on equipment idle times (no more than five minutes).
- Employ electric motors for construction equipment when feasible.
- Apply covers or dust suppressants to soil storage piles and disturbed areas that remain inactive over two weeks.
- Pre-wet the soil to be excavated during construction.
- Employ of oxidizing soot filters on all large suitable off-road construction equipment with an engine rating of at least 100 bhp.

OPERATION PHASE

The applicant proposes to mitigate the emission increases from the proposed facility using a combination of clean fuel, emission control devices and emission reduction credits. The applicant proposes to use a combination of dry low- NO_x combustion design, Selective Catalytic Reduction (SCR) and high-temperature CO oxidation catalyst technology for each of the combined cycle turbine trains to minimize its NO_x and CO emissions. The proposed control devices are designed to maintain the turbine/duct burner emissions to 2.5 ppm NO_x, 6 ppm CO, and 2 ppm VOC. The ammonia slip emissions (from unreacted ammonia in the SCR) will be maintained at 5 ppm or less. Natural gas will be the only fuel used, which will minimize the project's PM_{10} and SO_x emissions. Below is a brief description of the emission control technologies that are proposed for MBPP.

CONTROL OF NOX EMISSIONS

The project's NOx emissions consist primarily of nitric oxide (NO) and a small percentage of nitrogen dioxide (NO2). Thermal NOx is the product of the oxidation of N2 (present in the air used for combustion) at the temperatures present in the combustion process. Some NOx is formed from the oxidation of nitrogen present in the fuel. Nitrogen is not present in significant quantities in natural gas, so most of the NOx emissions from this project are due to thermal NOx.

Combustion chamber NOx can be controlled by reducing the flame temperature in the combustion chamber through quenching steam and dilution using water and steam injection. Additionally, thermal NOx can be controlled with combustor designs that premix the air and fuel and stage the combustion process (a reducing atmosphere followed by an oxidizing atmosphere). NOx emissions from the MBPP will be controlled through the use of dry low NOx combustors in the CTGs and the use of SCR as a post-combustion emission control. The turbines will be equipped with a number of dry low-NOx combustors to ensure optimal uniform temperature distribution in the primary air zone. A reduction in NOx emissions is also achieved by raising the mean air/fuel ratio. The use of dry low-NOx burners produces emissions as low as 25 ppm when natural gas is burned before entering the SCR.

In addition, MBPP proposes an SCR system to control NOx emission levels to 2.5 ppm corrected @ 15 percent O2. SCR is a process that chemically reduces NOx by injecting ammonia (NH3) over a catalyst in the presence of oxygen (O2). The process is termed selective because the NH3 reducing agent preferentially reacts with NOx rather than O2 to form N2 in the presence of excess O2 at temperatures in the range of 400 to 750 ^{o}F. If the temperature is lower than 400 ^{o}F, the ammonia reaction rate is low, and therefore, NH3 emissions (called ammonia slip) will increase.

MBPP is proposing NOx emissions to be at 2.5 ppm over one hour averaging time and ammonia slip of 5 ppm. Recently, EPA has changed its position on NOx emission BACT limit and reduced it to 2.0 ppm over one hour averaging time. Midway Sunset Project accepted the new BACT level with a 10 ppm ammonia slip level. However, El Segundo Power Redevelopment Project in the south coast is accepting 2.0 ppm over one hour averaging time with lower ammonia slip of 5 ppm. The El Segundo Project is utilizing the same size turbine as proposed in MBPP.

CONTROL OF CARBON MONOXIDE (CO) AND VOLATILE ORGANIC COMPOUNDS (VOC)

Good operating and maintenance practices and the use of a CO catalyst are the only measures proposed for this project to limit the project's CO and reduce VOC emissions. Combustion turbines inherently emit low CO and VOC emissions when burning natural gas. However, while high combustion temperatures, fuel/air mixing, and excess air inherent in the CTG's combustion process favor complete combustion of fossil fuels. These conditions will lead to higher NOx emissions. Current CTG designs attempt to balance achieving low NOx emissions (from the CTG prior to post-combustion controls) while keeping CO and VOC emissions low. With respect to CO, MBPP is proposing to install a CO catalyst. They propose to

achieve the lowest CO limit of 6 ppm during all operating scenarios or equivalent in mass emissions.

CONTROL OF PM10

Natural gas fuel contains only trace quantities of noncombustible material. Particulate emissions (PM10) will be controlled by inlet air filtering for the combined cycle CTG and HRSG unit. This is the best control technology available for this purpose and is acceptable by staff.

SULFUR DIOXIDE EMISSIONS CONTROL

The MBPP SO2 emissions will be controlled by burning only natural gas, which typically contains only traces of sulfur. The emissions from the project's CTGs are expected to be very small without the use of any additional post-combustion SO2 control equipment. MBPP is using natural gas fuel with sulfur content not to exceed 0.25 grains per 100 standard cubic feet.

EMISSION OFFSETS

Emission reduction credits (ERCs) can be created when existing permitted emission sources cease operation or reduce their operation below permitted levels. The ERCs are reviewed and approved by the local air district and recorded in their "bank" for future use. District's Regulation 204 requires MBPP to provide ERC for all net facility emission increases. To fully mitigate the facility's potential emission increases, MBPP plans to purchase ERCs from the District's ERC bank according to District's Rule 211. The MBPP mitigation package is in compliance with Rule 213 calculation method.

Offsets, in the form of ERCs, are required for NOx and VOC in order to assure that the project will not interfere with District's future "attainment" of the standards for ozone. The District also requires the mitigation of PM10, SOx and CO air emissions. MBPP is providing all the required offsets at 1:1 ratio as required by District rules. Furthermore, District's Rule 211 allows MBPP the use of the interpollutant trading ratio of 1:1 between VOC for NOx, and SOx for PM10.

The District, in its Air Quality Management Plan (AQMP), includes banked ERCs in its planning emissions inventories for future years as actual ongoing emissions. Therefore, the future effects due to emission increases from new sources are already taken into account in the AQMP, including the use of ERCs as a source of mitigation or offsets. The new source will not detract from the District attainment strategy. Consequently, we believe that banked offsets in this case constitute real mitigation of potential impacts from the proposed project in the context of the District overall attainment strategy. The following **AIR QUALITY Table 8** shows the amounts of ERCs that are provided, sources of the ERCs, and the ratio of mitigation.

AIR QUALITY Table 8 shows that the Applicant has secured 276.72 tons per year of NOX and using 15.49 tons per year of VOC to fully mitigate the project emissions of 292.3 tons per year. Furthermore, MBPP has secured 103.34 tons per

year of PM10 and using 99.86 tons per year of SOx to fully mitigate the project's PM10 emissions increase.

AIR QUALITY Table 8
Valid Emission Reduction Credits
Proposed By MBPP (Ton/Year)

Company Name	NOx	VOC	PM10	SOx	CO
Morro Bay Shutdown of the four Boilers	245.7	60.9	84.2	6.64	918.3
Elimination of Oil firing	8.19	0	17.22	194.93	0
Chevron ERC	22.92	32.89	1.92	1.23	2.62
Total Available Emission Reduction Credits	**276.72**	**93.79**	**103.34**	**202.8**	**920.92**
Project Emissions	**292.3**	**77.6**	**203.2**	**23.0**	**917.4**
Excess offsets / (required offsets)	(15.49)	16.19	(99.86)	179.8	3.52
Interpollutant Trading @ 1:1 Ratio (Rule 211)	VOC for NOx **15.49**		SOx for PM10 **99.86**		
Balance	**0**	**0.71**	**0**	**79.94**	**3.52**

Source: AFC Section 6.2, PDOC

DEMOLITION MITIGATION

The applicant proposes to use the same mitigation measure that were recommended in the construction phase of the project during the demolition phase to control the fugitive dust and equipment emissions. Staff evaluated the proposed mitigation and agree with them. The conditions of certification AQC-1 and AQC-2 will apply to the construction and demolition phases of the project to minimize the air emission impact during these periods.

ADEQUACY OF PROPOSED MITIGATION

CONSTRUCTION PHASE MITIGATION

As mentioned earlier in the impact section, the construction of the project will cause PM_{10} emissions that will add to the existing violations of the ambient PM_{10} air quality standard. Therefore, the project PM_{10} emission impacts due to construction of the

project are significant. Staff believes that the implementation of the applicant's proposed specific mitigation measures during construction of the facility will reduce the short-term impacts of NO_2 and PM_{10} to a level of less than significant.

OPERATIONAL PHASE MITIGATION

The project emissions will be fully offset, and will be built using BACT (clean burning using natural gas, SCR and CO oxidation catalyst systems) in accordance with the District NSR. The applicant has proposed an adequate amount of emission reduction credits to offset the facility's new NO_x, VOC, SOx and PM_{10} emissions as required by the District's Rules and Regulations. The project will not cause new violations of any NO_2, SO_x, or CO ambient air quality standards, and therefore, its NO_x, SO_x and CO emission impacts are not significant.

COMPLIANCE WITH LORS

FEDERAL

EPA has the authority to implement its Prevention of Significant Deterioration (PSD) and Non-attainment New Source Review (NSR) requirements. The EPA will issue its PSD analysis in the near future. The EPA has delegated to the District the authority to implement the federal Clean Air Act Title V operating permit program. This operating permit is issued only after a facility is in operation and will be included in the District's Permit to Operate. Therefore, compliance with the District's rules and regulations should result in compliance with federal requirements.

STATE

The project complies with the District's rules and regulations as the District interprets them and therefore, with Section 41700 of the California State Health and Safety Code.

LOCAL

The District expects to issue its FDOC on June, 2000. Based on a review of the FDOC, and the District's interpretation of their rules, staff will determine if the project will comply with applicable District rules and regulations.

CONCLUSIONS AND RECOMMENDATIONS

The California Energy Commission staff can not reach a conclusion at this time for the following two reasons:

1. Staff believes that the NOx BACT determination should to be resolved before it makes final recommendations on this project. MBPP is proposing BACT for NOx emissions at 2.5 ppm over one hour averaging time. EPA has recommended 2.0 ppm over one hour averaging time for a similar size project and their recommendation was accepted by that project owner/operator. In a recent discussion with EPA staff about this issue, EPA stated that BACT should

be at 2.0ppm over one hour averaging time. The District is evaluating this issue at this time, taking in consideration the ammonia slip level of 5 ppm. EPA will comment on this issue and give direction to the District during the commenting period on the PDOC. The District' Final Determination of compliance should reflect BACT determinations. A copy of the District PDOC is in Appendix A of this PSA.

2. MBPP needs to evaluate the air emissions impact associates with the demolition phase of the existing facility taking in consideration the emissions from the new turbines.
3. MBPP needs to be consistent with the Project operating profile in assessing the project impact. The project impact, as presented in the AFC is underestimated. To establish the maximum project impact, the Applicant should model two turbines in start-up mode and two turbines at maximum load with duct burners firing.

CONDITIONS OF CERTIFICATION

AQC-1 During construction of this facility, the following fugitive emission control measures shall be implemented at the plant site:

a. Suspend all land clearing, grading, earth moving, or excavation activities when winds (including instantaneous gusts) exceed 20 miles per hour.

b. Apply water to active construction sites and unpaved roads at least twice daily to control fugitive dust.

c. Apply sufficient water or dust suppressants to all material excavated, stockpiled, or graded to prevent fugitive dust from leaving the property boundaries and causing a public nuisance or a violation of an ambient air standard.

d. Apply a non-toxic solid stabilizer to all inactive construction areas (previously graded areas which remain inactive for 96 hours).

e. No on-site vehicle shall exceed a speed of 10 miles per hour on unpaved roads or areas.

f. All trucks hauling dirt, sand, soil, or other loose material will be watered or covered and will maintain at least two feet of freeboard to prevent a public nuisance.

g. Install wheel washers where vehicles enter and exit unpaved roads onto paved roads, or wash off trucks and any equipment leaving the site each trip.

h. Sweep streets with a water sweeper at the end of each day if visible soil materials are carried onto adjacent public or private paved roads.

i. Re-establish ground cover on the construction site through seeding and watering as soon as possible, but no later than final occupancy.

j. Implement all dust control measures in a timely and effective manner during all phases of project development and construction.

k. Place sandbags adjacent to roadways to prevent run off to public roadways.

l. Install wind breaks at the windward sides of construction areas prior to the soil being disturbed. The wind breaks shall remain in place until the soil is stabilized or permanently covered.

Verification: The project owner shall maintain a daily log of water truck activities, including record of the frequency of public road cleaning. These logs and records shall be available for inspection by the California Energy Commission Compliance Program Manager ("CPM") during the construction period. The project owner shall identify in the monthly construction reports, the area(s) that the project owner shall cover or treat with dust suppressants. The project owner shall make the construction site available to the District staff and the CPM for inspection and monitoring.

AQC-2 The project owner shall employ the following measures to mitigate, to the extent practical, construction related emission impacts from off-road, diesel fired construction equipment. These measures include the use of oxidizing soot filters, oxidizing catalysts, diesel fuel certified to CARB low sulfur fuel standards (sulfur content less than 15 ppm) and diesel engines that are either equipped with high pressure fuel injection, employ fuel injection timing retardation or are certified to EPA and CARB 1996 or better off-road equipment emission standards. Additionally, the project owner shall restrict idle time, to the extent practical, to no more than 5 minutes.

The use of each mitigation measure is to be determined by a Qualified Environmental Professional ("QEP") or a qualified independent California Licensed Mechanical Engineer ("ME"). The QEP or ME is to be approved by the CPM prior to the submission of any reports. The QEP or ME will determine the mitigation measures to be used within the following framework.

Construction Mitigation Framework

1. No measure or combination of measures shall be allowed to significantly delay the project construction or construction of related linear facilities nor shall they be allowed to cause significant damage to the construction equipment or cause a significant risk to on site workers or the public.

2. Engines certified to EPA and CARB 1996 or better off-road equipment emission standards **and** CARB certified low sulfur diesel fuel maybe used in lieu of oxidizing soot filters and oxidizing catalysts.

The QEP or ME, in consultation with the California Air Resources Board (CARB), will submit the following reports to the CPM for approval:

- Construction Mitigation Plan
- Reports of Change and Mitigation Implementation
- Emergency Termination of Mitigation Reports, as necessary

A. Construction Mitigation Plan:

The Construction Mitigation Plan shall be submitted to the CPM for approval prior to rough grading on the project site and will include:

a. A list of all diesel fuel burning, off-road, stationary or portable construction-related equipment to be used either on the project construction site or the construction sites of the related linear facilities.

b. All equipment listed under (1), shall be identified as either using engines certified to EPA and CARB 1996 or better off-road equipment emission standards, using diesel engines that are equipped with high pressure fuel injection, or using diesel engines that employ fuel injection timing retardation.

c. The determination of the suitability of all equipment listed under (1) to work appropriately with an oxidizing catalyst shall be identified except as provided for in item 3 of the Construction Mitigation Framework above. If a piece of equipment is determined to be unsuitable for an oxidizing catalyst, the QEP or ME will provide an explanation as to the cause of this determination.

d. The determination of the suitability of all equipment listed under (1) to work appropriately with an oxidizing soot filter shall be identified except as provided for in item 3 of the Construction Mitigation Framework above. If a piece of equipment is determined to be unsuitable for an oxidizing-soot filter, the QEP or ME will provide an explanation as to the cause of this determination.

e. Maximum idle times shall be identified for all equipment listed under (1).

f. The sulfur content of all diesel fuel to be burned in any equipment listed under (1) shall be identified.

B. Report of Change and Mitigation Implementation

The QEP or ME shall submit a Report of Change and Mitigation Implementation for approval to the CPM following the initiation of construction activities which contains at a minimum the cause of any deviation from the Construction Mitigation Plan, and verification of the Construction Mitigation Plan measures that were

implemented. Verification includes, but is not limited to, the following:

a. EPA or CARB engine certifications for item 2 of the **Construction Mitigation Plan**.

b. A copy of the contract agreement requiring subcontractors to comply with the elements under item 2 of the Construction Mitigation Plan.

c. Confirmation of the installation of either oxidizing catalysts or oxidizing soot filters as identified in items 3 and 4 of the Construction Mitigation Plan or the cause preventing the identified installations.

d. A copy of the contract agreement requiring subcontractors to comply with the elements under item 5 of the Construction Mitigation Plan.

e. A copy of receipts of purchase of diesel fuel indicating the sulfur content as identified in item 6 of the Construction Mitigation **Plan**.

C. Emergency Termination of Mitigation Report

If a specific mitigation measure is determined to be detrimental to a piece of construction equipment or is determined to be causing significant delays in the construction schedule of the project or the associated linear facilities, the mitigation measure may be terminated immediately. However, notification must be sent to the CPM for approval containing an explanation for the cause of the termination. All such causes are restricted to one of the following justifications and must be identified in any Emergency Termination of Mitigation Report.

a. The measure is excessively reducing normal availability of the construction equipment due to increased downtime for maintenance, and/or power output due to an excessive increase in back pressure.

b. The measure is causing or reasonably expected to cause significant damage to the construction equipment engine.

c. The measure is causing or reasonably expected to cause a significant risk to nearby workers or the public.

d. Any other seriously detrimental cause which has approval by the CPM prior to the change being implemented.

Verification: The project owner will submit to the CPM for approval the qualifications of the QEP or ME at least 45 days prior to the due date for the Construction Mitigation Plan. The project owner will submit the Construction Mitigation Plan to the CPM for approval 30 calendar days prior to rough grading on the project site. The project owner will submit

the Report of Change and Mitigation Implementation to the CPM for approval no later than 10 working days following the use of the specific construction equipment on either the project site or the associated linear facilities. The project owner will submit any Emergency Termination of Mitigation Reports to the CPM for approval, as required, no later than 10 working days following the termination of the identified mitigation measure. The CPM will monitor the approval of all reports submitted by the project owner in consultation with CARB, limiting the review time for any one report to no more than 20 working days.

APPENDIX A

SAN LUIS OBISPO COUNTY AIR POLLUTION CONTROL DISTRICT

PRELIMINARY DETERMINATION OF COMPLIANCE

MORRO BAY POWER PLANT PROJECT

BIOLOGICAL RESOURCES

Andrea Erichsen, Richard Anderson, and Michael Foster

INTRODUCTION

This section provides the California Energy Commission staff's analysis of potential impacts to biological resources from Duke Energy North America, LLC's proposal to construct and operate the Morro Bay Power Plant Modernization Project (MBPP).

This document discusses CEC staff's preliminary assessment of ecological impacts to state-listed and federally listed species, fully protected species, species of special concern, wetlands, and other areas of critical biological concern. In addition, this document describes the biological resources of the project site and ancillary facilities, determines the need for mitigation, determines the adequacy of mitigation proposed by the applicant , specifies additional mitigation measures to reduce identified impacts to less than significant levels, determines compliance with applicable laws, ordinances, regulations, and standards, and recommends conditions of certification.

In general, this document contains separate sections for terrestrial biota and marine biota.

- **Terrestrial Biota:** Terrestrial biological resource surveys conducted by consultants for the applicant provide information useful in determining the potential impacts related to the power plant and its ancillary facilities (Duke 2000a). General mitigation approaches proposed by the applicant in combination with mitigation measures proposed by Energy Commission staff are expected to adequately mitigate any impacts to plants and animals that could utilize the project site and immediate vicinity.

- **Marine Biota:** Once-through cooling systems like those employed at the MBPP result in adverse impacts on the environment, specifically due to, thermal discharge, entrainment, and impingement. Significant impacts to marine biota can be eliminated or reduced by technological alternatives, or mitigated to an acceptable level with habitat enhancement/restoration in Morro Bay and its associated estuary and watershed. The general mitigation measures and conditions of certification will be determined in close consultation with the Central Coast Regional Water Quality Control Board, California Department of Fish and Game, U.S. Fish and Wildlife Service, and the California Coastal Commission. CEC staff will be working with the applicant and other agencies to reach such an agreement prior to the Final Staff Assessment.

LAWS, ORDINANCES, REGULATIONS, AND STANDARDS (LORS)

FEDERAL

- **The Endangered Species Act** of 1973 (16 USC, §1531 et seq.), and implementing regulations, (50 CFR. §17.1 et seq.), designate and provide for protection of threatened and endangered plants and animals and their critical habitat.

- **Migratory Bird Treaty Act** (16 USC §701-718) and implementing regulations (50 C.F.R.) Subchapter B (§10.1-24.12) prohibits take of migratory birds.

- **Marine Mammal Protection Act** (16 USC Chapter 31 §1361-1375) provides protection for marine mammals.

- **Clean Water Act of 1972** (33 USC §404 et seq.) requires issuance of permits to dredge or fill waterways. A Nationwide Permit 7 (NWP7) is required to construct outfall structures where effluent is authorized by the National Pollution Discharge and Elimination System Program (NPDES section 402). Under the CWA the applicant is required to utilize best technology available to minimize potential once-through cooling water system impacts on biological resources. The 316(b) study results will assist in the determination of the best technology available for the proposed project, regarding entrainment and impingement losses, as well as the 316(a) thermal discharge studies to determine if the proposed project uses best technology available, and can meet the thermal discharge requirements.

- **Rivers and Harbors Act** of 1899 (§10: 33 USC §401 et seq.; CFR §114-116 and 321) requires U.S. Army Corps of Engineer permit to build or alter national waterway such as a harbor.

STATE

- **California Environmental Quality Act** (CEQA), PRC §21000 et seq. Mandates protection of California's environment.

- **California Endangered Species Act** of 1984 (Fish & Game Code, §2050 et seq.) protects California's endangered and threatened species. The implementing regulations, (Cal. Code Regs., tit.14, §670.5), lists animals of California declared to be threatened or endangered.

- **California Coastal Act** of 1976 (PRC §30000 et seq.) Requires the protection of coastal waters from adverse impacts of wastewater discharges and entrainment.

- **California Porter-Cologne Water Quality Control Act 1972**; California Water Code §13000-14957; Division 7, Water Quality. The administering agency for the above authority is the Central Coast RWQCB. Refer to **Soil and Water Resources section** for more details on water-related legislation.

- **Shellfish Protection Act** (California Code §§14951-14958) Protects commercial shellfish cultivation habitats from point and non-point source pollution.

- **California Native Species Conservation and Enhancement Act** (Fish & Game Code, §1750 et seq.) Mandates as state policy, maintenance of sufficient populations of all species of wildlife and native plants and the habitat necessary to ensure their continued existence at optimum levels.

- **Native Plant Protection Act** (Fish & Game Code, §1900 et seq.) establishes criteria for determining if a species, subspecies, or variety of native plant is endangered or rare and regulates the taking, possession, propagation, transportation, exportation, importation, or sale of endangered or rare native plants.

- **Streambed Alteration Agreement** (Fish and Game Code, §1600 et seq.) requires that any person planning to substantially divert or obstruct the natural flow or substantially change the bed, channel or bank of any river, stream or lake designated by the department, or use any material from the streambeds, must notify the department prior to such activity so that the department can carry out its mandate by proposing measures necessary to protect the fish and wildlife.

- **Fully Protected Species** (Fish and Game Code sections 3511, 4700, 5050, and 5515) prohibit the taking of birds, mammals, reptiles and amphibians, and fish, respectively, listed as fully protected in California.

- **Native Plant Protection Act** of 1977 (Fish and Game Code, section 1900 et seq.) gives CDFG authority to designate state endangered and rare plants and provides specific protection measures for identified populations.

LOCAL

- **City of Morro Bay General Plan**. Requires protection of environmentally sensitive habitats. Restricts permitted uses and specifies requirements for buffers zones, and conservation easements. Refer to **Land Use Section** for details on local ordinances.

- **City of Morro Bay Coastal Land Use Plan.** Requires protection of environmentally sensitive habitats along coastline and restricts permitted uses.

- **City of Morro Bay Zoning Ordinance** (Municipal Code Section 17). Requires protection of environmentally sensitive habitats (ESH). Restricts permitted uses and specifies requirements for buffers zones, and conservation easements. A biological survey (BS) shall be required for all proposed development that is or may be located within 100 feet of an ESH.

SETTING

REGIONAL DESCRIPTION

The proposed project is located on 107 acres of an existing industrial complex in the coastal town of Morro Bay, in San Luis Obispo county, California. State Highway 1, a popular tourist route, runs along the eastern edge of the site. Tourism and enjoyment of the coastal environment, wildlife, and fish, are of primary importance to the economy of Morro Bay.

Surrounding the existing power plant are the Pacific Ocean to the west, Morro Bay to the south and southeast, and urban development contained within the City of Morro Bay (pop. 9,664;1990 census) to the east. The project site is bordered to the north, east and southeast by a mosaic of the following anthropogenic land uses: light industrial, marine-related commercial (and recreational), agricultural, and residential (Duke Energy 2000 Vol. 1A).

The Morro Bay – estuary ecosystem supports one of the most important wetland systems on California's coast. The natural communities of Morro Bay/Estuary have been designated a State Estuary, and part of the National Estuary Program. The Morro Bay/Estuary is known for it's natural diversity and it's unique, sensitive, and energetic natural communities. Morro Bay is also part of the Pacific Flyway, which provides critical habitat for migrating shorebirds and waterfowl. The regional terrestrial communities include beaches, coastal active dunes and fore-dunes, coastal dune, and coastal valley scrub. In upland areas there are also significant areas of coastal valley grasslands and riparian woodland (Duke Energy 2000 Vol. 1A).

Morro Bay itself covers 2,100 acres (MBNEP 2000) and is sheltered from the open ocean by a sand spit. The bay is characterized by tidal marshes, mudflats, open water, and rocky intertidal zones, which provide highly productive, diverse, and dynamic habitats. The ocean shore, dunes, and undeveloped upland areas, as well as wetlands in the region, support many sensitive and listed species including amphibians, reptiles, passerines, raptors, shore birds, waterfowl, and small to medium sized mammals. The estuary also provides resident and nursery habitats for a variety of fish, including Steelhead. Thus, Morro Bay supports a wide diversity of biological communities and species (MBNEP 2000). Morro Bay receives freshwater from a 48,000 acre watershed drained by three creeks, Los Osos, Chorro, and Warden creeks (MBNEP2000). The habitats are described in greater detail in the AFC (Duke Energy 2000a).

SITE AND VICINITY DESCRIPTION

➢ *TERRESTRIAL RESOURCES*

The MBPP 107 acre parcel is surrounded by a mosaic of sensitive natural communities in addition to human-dominated land uses (i.e. industrial, commercial, agricultural, residential). The proposed project will affect 57 acres of the 107 acres on the existing power plant parcel. Because of the ecological importance of the

marine environment of Morro Bay and its inter-dependent terrestrial communities, it is important to address temporary, permanent, and cumulative adverse impacts to marine and terrestrial biota.

There are several sensitive ecological communities listed by the California Natural Diversity Data Base (CNDDB) for the Morro Bay Region: Central Coast Dune Scrub, Central Maritime Chaparral, Valley Needlegrass Grassland, Northern Coastal Salt Marsh, Coastal Brackish Marsh, Coastal and Valley and Freshwater Marsh, and Riparian.

Within a mile of the proposed MBPP site, ten different plant communities have been identified (**Biological Resources Table 1**). Traces of two of these communities (Coastal scrub, and Coastal valley Grassland) occur on site. The coastal active dunes and foredunes community occurs adjacent to the MBPP and occupies approximately one acre on-site. A sensitive species, the Burrowing Owl (*Athene cununcularia*), was observed on the MBPP site, in this small parcel of coastal active dunes and fore dunes natural community. This area is not planned for direct physical disturbance.

BIOLOGICAL RESOURCES Table 1
Ecological Communities and Sensitive Species
On Site and on Adjacent Parcels

Ecological Community	Present on MBPP site?	Occurs in areas Adjacent to MBPP?	Sensitive Species Observed on MBPP Site?	Sensitive Species Vicinity of MBPP? See Table 2 for list
Coastal active dunes and foredunes	No	Yes	Yes Burrowing Owl	Yes
Coastal dune scrub	No	Yes	No	Yes
Coastal dune slack	No	Yes	No	Yes
Coastal scrub, including rock outcrops	Yes	Yes	No	No
Coastal valley Grassland	Yes	Yes	No	Yes
Coastal salt marsh and tidal mudflats	No	Yes	No	Yes
Riparian woodland	No	Yes	No	Yes

Freshwater marsh	No	Yes	No	Yes
Plantations and urban mix	Yes	Yes	No	Yes
Anthropogenic	Yes	Yes	No	No

Data compiled from Duke 2000a

A list of plant and animal species recognized as being of special concern or protected under state and federal laws is provided in **Biological Resources Table 2.** The species in the table have been documented to occur or are likely to occur within a one-mile radius of the MBBP. Thus, they may occasionally occur on site and rely upon plant communities (habitats) within or adjacent to the MBPP site, including the marine environment.

The terrestrial plant surveys did not identify rare or endangered plants on the MBPP site. Those five species, which are known to occur within one mile of the site, would not be expected to occur onsite due to unfavorable growing conditions. The terrestrial wildlife survey did not detect terrestrial threatened or endangered wildlife species inhabiting the MBPP site. A burrowing owl was detected on the northwestern corner of the power plant site. This species is a California Species of Special Concern and a Federal Species of Concern. In addition, the site and adjacent dunes provide suitable habitat for the Morro Bay Blue Butterfly *(Icaricia icarioides moroensis*), a Federal Species of Concern, which not detected in on-site surveys.

BIOLOGICAL RESOURCES Table 2
Terrestrial Biota
Special Status Species
Likely to Occur within One Mile of MBPP

Known to occur within one mile	Scientific Name	Common Name	Legal Status Federal/State/Other
Plants			
D	*Calochortus clavatus var. clavatus*	Club-haired mariposa lily	CNPS 4
	Calystegia subacaulis ssp. Episcopalis	Cambria morning-glory	SC/CNPS 1B
	Chorizanthe breweri	Brewer's spineflower	CNPS 1B
D	*Cordylanthus maritimus ssp.Maritimus*	Salt marsh bird's-beak	FE /SE/CNPS 1B

	Dithyrea maritima	Beach spectacle-pod	FSC/ST/CNPS 1B
D	*Dudleya abramsii var. bettinae*	San Luis Obispo serpentine dudleya	FSC/CNPS 1B
D	*Dudleya blochmaniae ssp. Blochmaniae*	Blochman's dudleya	FSC/CNPS 1B
	Erigeron blochmaniae	Blochman's leafy daisy	CNPS 1B
D	*Erysimum insulare ssp. Suffrutescens*	Suffrutescent wallflower	CNPS 4
	Layia jonesii	Jones's layia	FSC/CNPS 1B
	Malacothrix incana	Dunedelion	CNPS 4
D	*Mucronea californica*	California spineflower	CNPS4
D	*Suaeda californica*	California seablite	FE /CNPS 1B
Fish			
D	*Oncorhynchus mykiss*	Central California coast steelhead trout	FT/SE
D	*Eucyclogobius newberryi*	Tidewater goby	FE/CSC
Mollusks			
D	*Helminthoglypta walkeriana*	Morro shoulderband snail	FE
Insects			
D	*Icaricia icarioides moroensis*	Morro Bay blue butterfly	FSC
Herpetofauna			
	➢ *Taricha torosa*	California newt	CSC
D	*Clemmys marmorata pallida* ➢	Southwestern pond turtle	FSC/CSC

➢ D	➢ *Rana aurora california*	Red-legged frog	FT
	Scaphiopus hammondii	Western spadefoot toad	FSC/CSC
D	*Phrynosoma coronatum*	Horned lizard	FSC/CSC
D	*Anniella pulchra*	Legless lizard	FSC/CSC
D	*Thamnophis hammondii*	Two striped garter snake	CSC
Birds			
D	*Gavia immer (nesting)*	Common loon	CSC/MNBMC
D	*Pelecanus occidentalis*	California brown pelican	FE/SE
D	*Phalacrocorax auritus (rookery)*	Double crested cormorant	CSC
D	*Ardes herodias (rookery)*	Great blue heron	CDFSC
D	*Botaurus lentiginosus*	American bittern	MNBMC
D	*Accipiter cooperi*	Cooper's hawk	CSC
D	*Accipiter striatus*	Sharp shinned hawk	CSC
D	*Circus cyaneus*	Northern harrier	CSC
D	*Elanus leucurus*	White-tailed kite	CSC/*
D	*Aquila chrysaetos*	Golden eagle	CSC
D	*Falco peregrinus (nesting)*	Peregrine falcon	FE Delisted/SE
	Laterallus jamaicensis	California black rail	FSC/ST
	Rallus longirostris obsoletuss	California clapper rail	FE/SE
D	*Charadrius alexandrinus (nesting)*	Western snowy plover	FT/CSC
D	*Sterna antillarum*	California least tern	FE/SE
D	➢ *Brachyramphus marmoratus*	Marbled murrelet	FT/SE

➢ D	➢ *Athene cununcularia*	Burrowing owl	FSC/CSC
D	*Empidonax traillii*	Willow flycatcher	SE
D	*Lanius ludovicianus*	Loggerhead shrike	FSC/CSC
D	*Riparia riparia*	Bank swallow	ST
D	*Dendroica petechia*	Yellow warbler	CSC
Mammals			
	Dipodomys heermanni morroensis	Morro bay kangaroo rat	FE/SE
D	*Neotoma fuscipes (luciana)*	Monterey dusky-footed woodrat	FSC/CSC
	Neotoma lepida intermedia	San Diego desert woodrat	FSC/CSC
D	*Enhydra lutris*	Southern sea otter	FT

Source: Duke 2000a Table 6.6B-2

D = documented to occur historically within 1 mile radius of MBPP site.

Status legend:

CNPS List 1B = Plants rare or endangered in California and elsewhere (California Native Plant Society 1994), FE = Federally listed Endangered, FT = Federally listed Threatened, FSC = Federal species of concern, FPT = Federally Proposed (Threatened), FC = Federal Candidate, CSC = CDFG species of special concern, FP = CDFG fully protected, ST = State listed Threatened, SCE = State Candidate (Endangered) SE = State listed Endangered, MNBMC = Fish and Wildlife Service Migratory Nongame Bird of Management Concern.

➢ *MARINE RESOURCES*

The diverse aquatic habitats of Morro Bay /Estuary support marine and terrestrial food webs and provide critical migration, feeding, and breeding habitats for marine mammals, birds, fish, and invertebrates. In addition to the MBPP operation, the ecological integrity of the Morro Bay/Estuary ecosystem has been stressed by many other man-made disturbances such as urban run-off and siltation (MBNEP 2000).

Morro Bay itself is a shallow, seasonally hypersaline estuary, which is best described as a barrier lagoon (Duke 2000a). The bay was formed behind a sand spit, which resulted from littoral transport north from the region by Pt. Buchon. The sand spit separates the bay and the delta of Chorro and Los Osos Creeks from the comparatively open waters of Estero Bay on the north side of Morro Rock. The land, which now connects Morro Rock to the mainland, was manmade and constructed to close a natural entrance to the bay from the north. Much of the approximately 2,100 acres covered by the bay is intertidal, and the average depth of the bay is 4 ft. below mean tide level.

Morro Bay has been physiographically described as containing four distinct zones, based on their tidal influence:

1) Entrance channel and upper bay
2) Central bay
3) Southernmost reaches of the bay
4) Deltas of the Chorros and Los Osos Creeks

These areas contain distinct tidal regimes, habitats, and wildlife.

There are several sensitive habitats in Morro Bay/Estuary: saltwater marsh, freshwater marsh, eelgrass beds, rocky intertidal zones, and mudflats. In addition, Steelhead trout *(Oncorhyrnchus mykiss),* a Federally Threatened and State Endangered species, occur in Morro Creek ; the population comprises an evolutionarily significant unit (Duke 2000a). The federally threatened sea otter (*Enhydra lutris*), and the state and federally endangered California brown pelican (*Pelicanus occidentalis*) are common inhabitants of Morro Bay. Numerous other sensitive species use the area.

Dominant ecological communities in Morro Bay/Estuary are intertidal mud flats, eelgrass beds, and coastal salt marsh. The bay also contains habitats consisting of sandy subtidal, rocky intertidal (including areas created by the breakwater, wharves and pilings), and brackish marshes (Morro Bay National Estuary Program 2000; Duke 2000a). Most of these habitats support aquatic vegetation. The estuary also accommodates a sizable commercial shellfish lease.

Diel and seasonal variations in species abundance, composition, and diversity of the shallow water fish community within Morro Bay have been quantified (by Dr. Horn for Duke 2000a). The site chosen for Horn's study was a shallow area of tidal flats and channels (considered typical bay habitat) adjacent to the western side of Baywood Point (Duke 2000a, Figure 6.6A-10). The bottom substrate was composed of mud/sand and covered with beds of eelgrass *Zostera marin*a, and algal species *Gracilaria* spp. and *Ulva* spp. Water depth in sections of the study area reached 2 m (7 feet) at high tide. Samples were collected every 3 hours during a 24-hr survey. Captured fishes were identified, sorted, measured (mm), and weighed (grams [g]).

- **RESULTS OF HORN'S FISH COMMUNITY STUDY ARE SUMMARIZED AS FOLLOWS:**

- During the four sampling periods, 36 seine hauls collected 11,627 fishes (197,747 g) representing **21 species**
- 82% of fish collected were three species were:
    1. Topsmelt *Atherinops affini*s
    2. Shiner perch *Cymatogaster aggregat*a
    3. Pacific Staghorn Sculpin *Leptocottus armatus*
- 91% of the biomass collected was represented by four species:
    1. Gray Smoothhound *Mustelus californicu*s
    2. Jacksmelt
    3. Shiner Perch
    4. Pacific Staghorn Sculpin
- The four most abundant species were:
    1. Topsmelt

2. Shiner Perch
3. Pacific Staghorn Sculpin
4. Gray Smoothhound

- The most abundant species was Topsmelt (31 percent of all fish collected).

- Nearly equal numbers of species were collected during the day (14 species) and night (15 species) for all sampling periods combined
- Substantially greater numbers of individuals and biomass were collected during sampling efforts at night.
- The highest number of individuals was collected in May
- The lowest number of individuals were collected in August.
- Species diversity' was highest for numbers of individuals in May.
- Biomass was the highest in November and the lowest in February.

➢ *SPECIES OF CONCERN IN MORRO BAY*

➢ TIDEWATER GOBY

The native Tidewater Goby *(Eucycloglobius newberryi)* is a Federally Endangered fish which inhabits bays and lagoons to the north and south of Morro Bay. There is suitable habitat for the Tidewater Goby at Morro Bay, and it has been detected in Morro Bay historically. Initially, Tidewater Goby larvae were possibly identified during entrainment sampling using morphometric (visual) examination. In order to obtain more accurate identification possible, DNA analyses were conducted by a qualified analyst (Jacobs 2001). This work was reviewed and approved by an expert chosen by the TWG. The DNA analyses provide evidence that the Goby larvae entrained in the MBPP cooling system were not those of the Endangered Tidewater Goby *(Eucycloglobius newberryi).*

➢ STEELHEAD TROUT

Steelhead trout *(Oncorhyrnchus mykiss)* were not detected in Moro Bay during surveys, nor were they detected as being impinged or entrained. However, this species has histroically occurred in the Morro Bay/Estuary system and may be present in small numbers.

IMPACTS AND ANALYSIS

STAFF'S CRITERIA FOR DETERMINING IMPACT SIGNIFICANCE

➢ *TECHNICAL WORKING GROUP*

The Technical Working Group (TWG) was formed by the CCRWQCB and included staff representatives of the CCRWQCB, CEC, California Department of Fish and Game (CDFG), and the California Coastal Commission (CCC), the applicant and the applicant's consultant. Three independent marine biologist experts are included; two hired by the CCRWQCB, and one hired by the CEC to provide expert advice.

The TWG designed and approved study methodologies, verified results and analyses, and helped interpret the results for the regulatory process.

In order to determine the ecological and legal significance of impacts, staff rely on professional judgement, expert opinion (Technical Working Group), and standards and criteria established by the Federal and State Endangered Species Acts, the California Environmental Quality Act (CEQA), the Migratory Bird Treaty Act, and the Federal Clean Water Act. In addition, Fish and Game Code and other state and local regulations may apply. These regulations direct applicants to avoid and mitigate for the loss of habitat for sensitive species and to obtain permits for incidental take of protected species.

Staff must determine significance based on whether endangered, threatened, protected, sensitive species and communities will be adversely affected. Threatened or endangered species are those formally recognized and listed by the state or federal government. Fully protected species receive special legal protection from the state in the form of prohibition against take or unauthorized collecting and possession.

The withdrawl and discharge of seawater for cooling is regulated by the federal **Clean Water Act**. The discharge of point source pollution requires issuance of a National Pollutant Discharge Elimination System (NPDES) permit. This permit is administered by the Central Coast Regional Water Quality Control Board (CCRWQCB) with oversight by the State Water Resources Control Board (SWRCB) and Environmental Protection Agency (EPA). In preparation for the reissuance of the NPDES permit, a Technical Working Group (TWG) was assembled containing agency representatives from CDFG, CEC, California Coastal Commission, and RWQCB. The RWQCB and CEC have independent experts hired to assist with the study plans that have been developed by the TWG. The purpose of the TWG/coordination is to insure agreement on data and assumptions for the 316a & b studies and the study results. The purpose of the MBPP Modernization Project Thermal Discharge Study (316a) and the Entrainment/Impingement Study (316b), are to evaluate the existing condition of aquatic resources in Morro and Estero Bays and to estimate future impacts to these bays from the proposed power plant.

PROJECT SPECIFIC IMPACTS

➢ *POWER PLANT – TERRESTRIAL IMPACTS*

As a result of demolition of the existing power plant, and construction of the new power plant, <u>there will be a permanent loss of approximately one acre of wildlife habitat</u>. The most significant impacts are likely to involve disturbance of wildlife by increased human activity and noise related to construction and demolition activities. Thus, human impacts will reduce the acreage as well as suitability of the wildlife habitats (i.e. for resting, nesting, foraging) remaining on site and adjacent to the MBPP. For example, a Burrowing Owl was seen using a burrow in the northwest corner of the MBPP site. This area will not be physically disturbed, however, increased noise and human activities (i.e. construction, traffic) will affect the owl's

use of the area. The disturbance and probable displacement of the Burrowing Owl is potentially significant, and will need to be mitigated.

The applicant has conducted surveys for other sensitive species such as Morro Shoulderband Snail and California Legless Lizard, but none were detected on site. The sensitive habitats surrounding the plant (beach communities, riparian and wetland habitats) will not be physically disturbed by the MBPP project. However, noise, lighting, and generally increased human activities associated with construction and operation of the MBPP will adversely affect some species.

Soil erosion related to construction activities can impact aquatic biological resources if allowed to enter Morro Bay, but the application of appropriate site-specific measures can mitigate potential erosion impact. A draft erosion control plan shall be submitted to the Energy Commission for review and approval (see Soils and Water section). Through implementation of an approved erosion control plan, it is anticipated that aquatic biological resources will not be significantly impacted by erosion impacts from the power plant site.

The following sections discuss specific aspects of the MBPP and their expected impacts to terrestrial biota:

- **STORMWATER AND NATURAL GAS PIPELINE**

New stormwater pipelines and natural gas pipelines will be placed underground on the existing MBPP site. Pipeline construction for stormwater runoff and intake, and natural gas will be limited to onsite tie-ins. The stormwater pipelines would tie-in (onsite) to the existing pipeline that leads to the outfall located approximately 300 feet south of the MBPP site. Two natural gas pipelines will extend from the northeastern portion of the site and connect to the existing PG&E regulator station. The pipeline will be bored under a small ephemeral stream channel (Willow Camp Creek). Thus, the applicant may need a Streambed Alteration Agreement from CDFG; this will be determined prior to the Final Staff Assessment. Willow Camp Creek drains into Morro Creek. The upward leakage of bentonite (fracout) into the surface water could impact approximately one-half mile of Morro Creek up to its discharge to Estero Bay. With proper safeguards, fracout will be prevented and no significant impacts are expected.

- **ROADS**

An access road will be constructed on the western side of the MBPP facility. This 100 foot long road will connect the power plant site with an existing dirt road on the beach side of the MBPP site. The road will be constructed on moderate to degraded quality dune habitat. The project owner has selected the least damaging location to build this road. The dirt road will be slightly widened and be used by trucks during construction activities. Good quality dune habitat exists along both sides of this road and may be habitat for the Morro Shoulderband Snail and California Legless Lizard. Placing exclusion fences along both sides of the road should eliminate potential significant impacts that would result if individuals of either of these species were run over.

- **BRIDGE CROSSING**

A bridge is proposed over Morro Creek and will create a continuous road system for Embarcadero Road (Duke 2000a). Steelhead trout *(Oncorhyrnchus mykiss)* were not detected during surveys, but may be present in Morro Creek. The project owner plans to avoid any disturbance of the creek or riparian habitat by spanning this sensitive area to avoid direct impacts to these areas. The bridge construction phases will use best management practices to avoid impacts to Morro Creek. No significant impacts are expected from the construction of the bridge.

- **BIKE/ PEDESTRIAN PATHS**

The applicant proposes to construct two new bike/pedestrian paths in the vicinity of the MBPP. A Class I path will be constructed along the south side of the MBPP (onsite) to provide access from Main Street to Embarcadero. This area has some large Eucalyptus trees and an understory of nonnative grasses. A Class II path will be constructed to link an existing Class I path along Embarcadero Road. The existing Class I path along Embarcadero Road will transition into a Class II path as it crosses over the proposed Morro Creek bridge and continues northward towards Highway 1. The additional bike/pedestrian paths will create a loop around the MBPP (Duke 2000a). This bike path will not disturb any sensitive natural communities.

- **BIRD ELECTROCUTION AND COLLISION**

The best available data indicate that the risk of such fatalities is low at the MBPP. No new transmission lines will result from this project.

- **BUILDING AND STACKS**

The proposed stacks will be 145 feet tall and will replace the current stacks which rise 450 feet. Studies of bird collision fatalities indicate that avian mortalities are significantly associated with structures over 1000 feet tall. Low numbers of collisions have been reported with structures in the 400-650 foot range (Goodwin 1975; Maehr et al. 1983; Weir 1974; Zimmerman 1975), but because the proposed stacks will only be 145 feet tall, they should pose very small risk of injury to birds. Although an occasional collision can be expected, the proposed stacks are not expected to cause significant numbers of bird collision fatalities.

- **TRANSMISSION FACILITIES**

The project does not require additional transmission line construction, except for installation of short generation ties from the MBPP gas and steam turbine generators to the 230 –kV to the existing PG&E switchyard; the switchyard is located on the MBPP site (Duke 2000a). Transmission facilities related construction activities are on-site and are not expected to cause significant impacts.

- **MORRO ROCK**

There has been concern expressed for Peregrine Falcons which nest on Morro Rock (**See Cultural Resources section**). CEC staff does not anticipate any adverse effects to peregrine falcons from MBPP construction, demolition, and operation.

- **CONCLUSION - TERRESTRIAL IMPACTS**

Terrestrial biological resources impacts have the potential to be significant. The applicant has proposed purchasing and conserving an area of coastal dune natural community to mitigate for terrestrial biological resources impacts. The plan has not been submitted as of this writing. Mitigation/conservation recommendations can be found in the mitigation section and will continue to be evaluated for the Final Staff Assessment.

- ***POWER PLANT – MARINE/AQUATIC IMPACTS***

- **ONCE-THROUGH COOLING**

The existing power plant would eventually be closed down and marine impacts resulting from the cooling water system would also cease. The MBPP project extends the life of the facility, and the cooling water system associated impacts for 30-50 years. It is these continuing impacts on the marine/estuarine resources that are considered significant. The primary operational components associated with once-through cooling that have the potential to cause significant adverse impacts to biological resources are entrainment, impingement, and thermal discharge. As detailed below, the Technical Working Group (TWG) has carefully analyzed the 316(a) and 316(b) studies required under the Clean Water Act, and for CEQA analysis, and has determined that there will be significant impacts to the Morro Bay/Estuary ecosystem. These adverse impacts will require mitigation through one of three options.

- **AQUATIC ORGANISMS: IMPINGEMENT, ENTRAINMENT AND THERMAL EFFECTS**

- ***Definitions***

A power plant once-through cooling water system may impact aquatic organisms by impingement, entrainment, and/or thermal discharge effects. The body of water from which the cooling water is withdrawn is called the **source water**. **Impingement** of aquatic organisms results during cooling water intake as organisms are pulled into contact with the intake screens, and are held there by the velocity of the water being pumped through the cooling system. Unless the

organisms are able to escape they perish. **Entrainment** occurs when small aquatic organisms (fish eggs, larvae, etc.) are carried on a destructive passage through the intake screens (screen mesh size usually 5/16 or 3/8 of an inch) and on through the remainder of the cooling system. It is generally assumed that a high percentage of entrained species are lost. We assume 100% loss in this analysis. **Thermal discharge** (i.e. heated water) from the cooling water system may also have adverse effects on aquatic species.

Ecological effects of entrainment and impingement on aquatic biota were assessed using both historical studies, as well as recently completed 12 month surveys. The surveys considered both the effects of entraining larval fish and megalopal cancer crabs in the cooling water system, as well as the impingement of larger fish and macroinvertebrates at the cooling water intake structure (CWIS). Ecological effects of impingement, entrainment, and thermal discharge are difficult to predict for this project due to the limited temporal scale of the studies and the complexity and spatial scale of this dynamic marine ecosystem. The Morro Bay/Estuary ecosystem is impacted simultaneously by numerous man-made stressors (i.e. pesticides, nitrogen, siltation, power plant). Acknowledging this, the staff of the California Central Coast Regional Water Quality Control Board and the California Energy Commission are in agreement on the following impact assessment approach as a reasonable way to estimate impacts and to determine mitigation/compensation levels.

Note: all data provided in the tables and figures below reflect those conditions which are predicted to occur after the MBPP is modernized.

- **SOURCE WATER SAMPLING**

Generally, a year of carefully designed data collection is required to cover seasonal periods because the natural distribution and abundance of marine and estuarine life vary significantly throughout the year. Large variation may occur inter-annually as well. Source water sampling and entrainment sampling should be done during both day and night, in order to estimate the proportions of organisms that are being entrained in the power plant cooling water system relative to the population from which they come. Five stations were established to obtain a representative sample of the source water (Biological Resources Table 3). These included three stations in the bay/estuary, one at the intake (doubles as entrainment sample site), and one in Estero bay just outside the harbor entrance. Although not chosen at random, they were chosen for accessibility and for what is thought to be a representative sampling of the source waters.

The existing Morro Bay Power Plant withdraws up to 464,000 gpm (1000cfs) from Morro Bay daily. This volume is about 6.3 percent of the average tidal exchange volume (during the larger of the two daily tides). This percentage increases to about 9% for smaller tides.

Biological Resources Table 3 provide the following information on source water: the species that were found and the locations sampled over time. At stations 1-4 the larvae samples represented common and abundant species such as Goby species

and Sculpin. Station 5 was offshore and showed a much greater diversity of species (not a greater concentration) than the bay/estuary, many representing oceanic species. There was also seasonal variation in the samples and significant differences in concentrations at different sampling stations; for example, the lowest concentration was quantified at station 5 which is offshore. Morro Bay source water stations 3 and 4 consistently recorded the highest concentrations of larvae over time.

BIOLOGICAL RESOURCES Table 3
Relative Percentage of Fish Species Found at Five Different Source Water Sampling Locations (#1-5) at Morro Bay

Fish Species	1 Harbor Mouth	2 Intake	3 Mid Bay	4 Back Bay	5 Offshore
Unidentified Gobies	79%	75 %	83%	76%	35%
Shadow Goby	5%	3%	11%	20%	1%
Northern Lampfish	-	3%	-	-	12%
Pacific Staghorn Sculpin	4%	4%	-	-	1%
Jacksmelt	1%	1%	-	-	1%
Unidentified Blennies	-	2%	-	-	1%
Northern Anchovy	-	-	-	-	9%
All other species	10%	11 %	7%	4%	10%
Additional species found offshore	-	-	-	-	30%

Source: Duke MBPP 316(b) Resource Assessment 5/11/01

- **ENTRAINMENT**

The results of the entrainment study reveal that the proportional entrainment losses of larvae and eggs of the estuarine fish are high and the losses of macroinvertebrates and non-estuarine fishes are low (Biological Resources Tables 5, 6, and 7). The greatest impacts are on the estuarine ecosystem, with lesser impacts to the offshore (oceanic) ecosystem. However, the true effects on the oceanic ecosystem, should the intake pipe be relocated offshore, would need to be assessed more completely.

Gobies (**Biological Resources Tables 3, 4 and 6**) are very representative of the bay and estuary and provide a good example for consideration regarding proportional entrainment (Michael Thomas pers. comm; TWG). The most abundant

fishes detected in source water sampling were gobies (**Biological Resources Table 3**). Goby larvae are entrained at between 11.5 percent and 43 percent of their concentration in the source water **(Biological Resources Tables 4 and 6**). This range causes concern. Jacksmelt and Blennies are also entrained at high levels, but the remaining fish species are entrained at lower levels.

Of the fish larvae identified, Blennies were entrained (**Biological Resources Tables 4 and 6**) at high levels compared to what levels were detected in the source water (**Biological Resources Table 3**). The cause for this pattern is likely habitat selection by Blennies ; they prefer habitats among rocks and pilings such as those found in the harbor near the intake structure. Blennies were only detected in source water sampling at the intake station and at the off-shore station that is not that far from rocky substrate.

Biological Resources Table 4
Entrainment study results-- proportional withdrawal ratios and equivalent adults lost

Taxa	**Lower[1] Proportional Larval Loss Estimate**	**Maximum[2] Proportional Larval Loss Estimate**	**Equivalent[3] Adults Lost**
Estuarine Fish			
Gobies	11%	43%	800,000/year
Shadow Goby	1%	3%	24,000/year
Jacksmelt	22%	44%	
Combtooth Blennies	50%	72%	8,000/year
Pacific Herring	1%	3%	532/year
Averages	**17%**	**33%**	

Taxa	**Average[1] Proportional Larval Loss**	**Equivalent[3] Adults Lost**
Non-Estuarine Fish		
Pacific Staghorn Sculpin	5%	
Northern Lampfish	2%	
Rockfishes	2%	26/year
White Croaker	2%	106/year
Cabezon	4%	

Crabs		
Brown Rock Crab	3%	5,200/year
Hairy Rock Crab	0.8%	1,300/year
Yellow Rock Crab	3%	630/year
Slender Crab	0.08%	1,200/year
Red Rock Crab	2%	42/year
Dungeness Crab	5%	54/year

Draft Table by Michael Thomas, CCRWQCB, 2001

As seen in **Biological Resources Tables 5, 6 and 7**, three models were selected to quantify losses caused by the CWIS: **fecundity hindcasting (2FH), adult equivalent loss (AEL), and empirical transport modeling (ETM).**

- 2FH and AEL place the most mathematical weight on the adult stage of the fish, not on larvae and eggs. The FH and AEL analyses are routinely used by commercial fisheries; the fishing industry is most concerned with the harvesting of adult fish.
- In contrast, the ETM model calculates population trends including statistics on the survival of eggs and larvae. Thus the loss of eggs and larvae in source water population may be modeled to see if effects may be predicted to occur in the overall population of a given specie. The ETM model provides proportional entrainment information. Knowing the proportion of fish larvae and eggs that are being lost relative to the numbers existing in the source water provides a more complete assessment of the magnitude of losses taking place on the bay and estuary **ecosystem (Biological Resources Tables 5,6, and 7**).

BIOLOGICAL RESOURCES Table 5
Summary of Estimated Entrainment of Cancer Crabs
Using FH and ETM models

Total % of All Crab Larvae Entrained	Crab Species	Total Entrainment	2FH Model	Average ETM δ (a) As a % (P_m*100)
71.8	Brown Rock Crab	9.7×10^6	5,194	2.75
14.5	Hairy Rock Crab	2.0×10^6	1,342	0.84
8.2	Yellow Rock Crab	1.1×10^6	630	3.1
3.5	Slender Rock Crab	4.7×10^5	1,210	0.79
0.4	Red Rock Crab	8.6×10^4	42	2.04
0.6	Dungeness Crab	5.5×10^4	54	5.31

δ ETM model adjusted by P_s to estimate P_m. Average P_m = 0.02

(a) ETM values Calculated by using average period of entrainment risk. The number is the percent (proportion) entrained relative to the source water concentration
Source: Duke MBPP 316(b) Resource Assessment 5/11/01

Biological Resources Table 6 provides two ETM estimates (as %). These percentages estimate the proportion of the larvae and eggs in the source water that would continue to be entrained. These numbers are used in later tables (Biological Resources Table 7 and 13 in the Mitigation section).

The average ETM is the average time a fish larvae or egg is at risk of entrainment, and the maximum ETM is the time a larvae or egg can be at risk. At risk indicates that the larvae or egg is of a size that can be entrained (fit through the screen), and that the organism is in a life-stage (larvae, egg, small fish) that causes it to be transported passively in the water column. The low (average) and maximum at risk proportional entrainment estimates for estuarine fishes **(Biological Resources Table 4**) will be used later for habitat equivalency calculations.

BIOLOGICAL RESOURCES Table 6
Summary of Estimated Entrainment of Abundant Fish Species
Using FH, AEL, and ETM models.

Total % of All Fish Larvae Entrained	Fish Species	Total Entrained	2FH Model	AEL Model	Average ETM (%) (P_m*100)	Maximum ETM (%)
77	Unidentified Gobies	3.9×10^8	8000,862	*	11.53	43
3.4	Pacific Staghorn Sculpin δ	1.7×10^7	*	*	5.13	18.82
2.9	Northern Lampfish δ	1.5×10^7	*	*	2.38	*
2.7	Shadow Goby	1.3×10^7	23,794	*	1.43	3.29
2.0	Blennies	1.0×10^7	8,722	8,084	49.13	72.42
1.3	KGB Rockfishes δ	6.4×10^6	26	23	2.4	53.7
1.2	Jacksmelt	6.3×10^6	*	*	21.94	44.19
0.6	White Croaker δ	3.0×10^6	106	*	2.15	*
0.6	Pacific Herring	3.0×10^6	86	532	1.18	1.76

0.6	Cabezon $^{\delta}$	2.9 x 10^6	*	*	3.71	*

- Taxa that used an ETM model adjusted by P_s to estimate P_m, Avgerage P_m = 0.10
- Unavailable information or value that could not be computed.

Source: Duke MBPP 316(b) Resource Assessment 5/11/01

Biological Resources Table 7
Entrainment study results-- proportional withdrawal ratios and equivalent adults lost

Taxa	Lower[1] Proportional Larval Loss Estimate	Maximum[2] Proportional Larval Loss Estimate	Equivalent[3] Adults Lost
Estuarine Fish			
Gobies	11%	43%	800,000/year
Shadow Goby	1%	3%	24,000/year
Jacksmelt	22%	44%	
Combtooth Blennies	50%	72%	8,000/year
Pacific Herring	1%	3%	532/year
Averages	**17%**	**33%**	

Draft Table by Michael Thomas, CCRWQCB, 2001

- **IMPINGEMENT**

The results of the impingement study quantify the species, abundance, and weight of organisms impinged by the MBPP once-through cooling system **(Biological Resources Table 8**). The Northern Anchovy was the most commonly found species in terms of its abundance (the number of individuals counted in each sampling period) and its biomass (the relative weight of all individuals of the species divided by the total weight of all organisms colllected during each sample period). Thormback, Topsmelt and Plain Midshipmen were among the top 4 (respectively) fish species represented by biomass. (Table 4).

Overall, impingement is responsible for the loss annually of an estimated 78,000 fish (1.3 metric tons (2,833 pounds)), and 54,979 macroinvertebrates (.384 metric tons (848.8 pounds))(Tenera 2001). These levels of impingement are potentially significant, and were discussed on numerous occasions. Ultimately, these levels were not considered significant by the independent experts on the TWG. The new power plant will pump less water at a reduced velocity of 0.3 to 0.37 feet per second (fps) instead of the current 0.5 fps. This should reduce future impingement losses.

BIOLOGICAL RESOURCES Table 8
Relative Percentage of Fish Species Impinged at MBPP as a Function of Abundance and Biomass

Species	Relative Impingement By Abundance (%)	Relative Impingement By Biomass (%)
Northern Anchovy	74	39

Topsmelt	6	14
Plain Midshipmen	5	13
Thomback	-	17
Speckled Sanddab	3	-
Pacific Staghorn Sculpin	2	-
Other fish species	10	9
Bat Ray	-	4
Cabezon	-	2
Pacific Sardine	-	2

Source: Duke MBPP 316(b) Resource Assessment 5/11/01

- **CONCLUSIONS- ENTRAINMENT AND IMPINGEMENT IMPACT**

The entrainment losses in Morro Bay are significant as determined by the TWG. Entrainment may cause significant damage to the Morro Bay/Estuarine ecosystem by sustaining fish larvae and egg losses and thus increase entropy (loss or waste of useful energy that would otherwise be used in ecosystem productivity) and decreased biomass in the ecosystem. Because the effects are considered significant, mitigation requirements should include either 1) modification of the cooling system to eliminate entrainment, or 2) modification of the intake to reduce entrainment, plus mitigate for remaining losses, or 3) mitigation within the estuary and watershed. These mitigation options will be addressed below along with an analysis of technology options for reducing entrainment and impingement losses.

Impingement losses are not considered significant by themselves, although they are considerable, and will be addressed further in cumulative impacts section.

- ***ECOLOGICAL IMPACTS OF THE THERMAL PLUME***

Regulation of thermal discharge is biologically important because thermal plumes of water can cause natural community changes and adverse effects to the near-shore, soft benthos, sandy beach, and rocky intertidal zone (including jetties) communities.

The Clean Water Act provides for the 316(a) assessment of the thermal plume discharge. The Clean Water Act prohibits discharge that causes the receiving water's ambient temperature to increase above 20°F for a specified period, or rise 4°F above the following: a) natural water temperatures at the shoreline, b) the surface of any ocean substrate, or c) the ocean surface beyond 1,000 feet from the discharge for a specified period.

The existing power plant discharges cooling water to Estero Bay, just north of Morro Rock, through a surface discharge channel. The discharge flow rate is up to 464,000 gpm, (1,000 cfs) and the discharge temperature rise is up to 20°F. The existing plant operates under NPDES permit No. CA 0003743 (March 10, 1995), which allows the plant to discharge a maximum flow of up to 503,000 gpm of cooling water to Estero Bay at a temperature increase of up to 30°F above the temperature of the intake (Duke 2000a). The applicant is expecting that the temperature rise for the new combined cycle units will be 20°F at maximum plant load (DUKE 2000a).

➢ PHYSICAL CHARACTERIZATION OF THE THERMAL DISCHARGE PLUME

Duke Energy has attempted to characterize the thermal discharge from the Morro Bay Power Plant (DUKE 2000a). A draft 316 (a) report describing results of the investigations to date (Tenera 2001) has been issued, and much of the following assessment is based on this report.

The thermal discharge study was conducted using the following methods of quantification and characterization:

- Fixed temperature recorders were deployed at approximately 35 locations to record temperatures at 20-minute intervals for an extended period of time. Stationary recorders measured temperature at a fixed depths, and floating recorders measured temperature at fixed depths below the water surface. The floating recorders provide more accurate data on thermal plume characteristics. The temperature variations measured by stationary recorders result from tidal variation in water level and temperature variation in the discharge plume itself.
- Boat surveys were conducted in July 1999, October, November and December 2000, and January 2001. The objective of the boat surveys is to provide temperature maps as well as calibration of the aerial infra red surveys. (Tenera 2001).
- Measurements were conducted using temperature recorders at the surface and at 3 and 10 ft depths. Wind and wave conditions are recorded for the days of the surveys.
- Aircraft-based Infrared (IR) photography was also used. These data provide instantaneous images of the thermal plume, but actual temperature measurements are required to relate the photographic patterns to actual temperatures. IR surveys were conducted nine days from November 2000 to January 2001. Each daily survey was planned so that the plume was photographed at different times in the daily tidal cycle.

An integral part of characterizing a thermal discharge plume is quantification of the ambient water temperature (the natural temperature range of the water in absence of the thermal discharge). For this assessment, temperatures were measured at the Estero Bay buoy, approximately 2.3 km northwest of the discharge outlet; this distance was assumed to be large enough to negate effects of the plant discharge. Occasionally however, temperature increases of 1 to 2°F were recorded and these were attributable to the plant (Tenera 2001).

Summer water temperatures in Morro Bay often rise significantly above Estero Bay temperatures due to solar heating. However, intake temperatures are not significantly different from Estero Bay temperatures because the plant intake is near Morro Bay's entrance and is deep enough in the water profile to be below the warm temperature thermocline. Measurements indicate that *average* intake temperatures were up to 1.3 ^{o}F higher than Estero Bay background temperature in June (temperature differences are variable and can exceed 3°F in the summer), with smaller rises from February to October (Tenera 2001).

Plume Configuration. The thermal surveys show varying thermal plume configurations during the tide. As tide rises, currents are predominantly towards the

north and the plume travels in a northwesterly direction. As tide ebbs, currents are largely to the south and the plume wraps around Morro Rock. The effects of waves and wind add to these basic features. Because the predominant wave direction is from the west-northwest, a southerly along shore current develops in the near-shore zone, which frequently keeps the plume from the beach, and pushes it against Morro Rock (Tenera 2001).

An important factor to consider when reviewing data from the *Thermal Discharge Assessment Report* is that the plant power production level was variable during the monitoring period, and although some information on plant power production is provided, data corresponding to the different surveys are not provided. The plant power production levels during the monitoring period represent actual conditions, and therefore provide an indication of actual impacts. However, it is likely that the new plant will be used at a level closer to its capacity than the existing plant. This factor must be taken into account when extrapolating current results to future conditions.

Thermal Plume Characteristics at Morro Rock Shoreline. Because of the discharge location and the dominant west-northwest wave direction, the thermal plume generally flows along the northern shore of Morro Rock which contains rocky intertidal communities. Over a length of about 500 ft from the discharge (to Station 5), temperature rises often exceed 10°F. It should be noted that the temperature sensor at Station 5 is at a fixed elevation 3 feet below Mean Lower Low Water (MLLW); therefore, this sensor may be below the plume during periods of high water. This may explain some of the periodic low temperature rises at this station and provide a misleading image of the thermal plume (Tenera 2001)

The measurements indicate that the temperature rise at Station 6, on Pillar Rock, at the northwest corner of Morro Rock, exceeds 4°F for varying fractions of the time from 6% to over 40%. The temperature sensor at this station is also located 3 ft below MLLW and this may underestimate temperature rises there.

The measurements further indicate that the thermal plume generates temperature rises exceeding 4°F for lengths of up to 4,000 ft around Morro Rock, albeit for shorter periods of time. These long excursions were found to occur predominantly in the summer.

Size of 4°F Temperature Rise Isotherm. Maps of the 4°F temperature rise isotherms were developed eight times between November 2000 and January 2001. Plant power production levels during these surveys varied from 63 to 85 percent of capacity. The length of the 4°F temperature rise isotherms for these surveys varied from 2,000 to 5,000 feet (Tenera 2001).

- **IMPACTS OF THERMAL DISCHARGE PLUME ON MARINE COMMUNITIES**

In order to detect thermal discharge effects on the biotic communities in the vicinity of the MBPP discharge, several studies were conducted. The biotic communities studied were the sandy bottom benthic habitat, the beach habitat (Morro Strand State Beach) and along the rocky intertidal area of Morro Rock. The results show

there was no correlation between species abundance and distance to plume/distance to outfall drain for the sandy bottom benthic and beach habitat. Natural variability in the water near the outlet in Estero Bay is intrinsically high. As such, species presence and abundance were patchily distributed.

The results for Morro Rock intertidal zone study, show extensive changes in the biotic community. This occurred along the first 500 feet after the discharge, and lessened after that. This community has been modified for some time due to the thermal discharge, and with the new MBPP using the same discharge, these effects will continue. Though not considered significant by themselves, these effects are considerable and do contribute to significant cumulative impacts.

- **CONCLUSIONS-THERMAL IMPACTS**

Thermal impacts to biological resources are not considered significant, although they are considerable. They do also contribute to the overall significant cumulative biological resources impacts.

CUMULATIVE IMPACTS

Defined in CEQA, cumulative impacts refer to two or more individual effects which, when considered together, are considerable or which compound or increase other environmental impacts.

Staff is still evaluating potential cumulative impacts. Since the direct impacts of the project are still preliminary, and could change based on cooling water system options, staff will complete their cumulative impact analysis for the Final Staff Analysis.

MITIGATION

APPLICANT'S PROPOSED MITIGATION

- ***MARINE ENVIRONMENT***

The applicant has indicated that the because the new combined cycle plant will be designed to use significantly less cooling water (approximately 29% reduction) that the impacts of the cooling water system on the marine environment will be adequately reduced. This includes the effect of lowering the velocity at the intake from the current 0.37 feet per second for units 1 and 2 and 0.51 feet per second for units 3 and 4 to 0.3 feet per second for the combined cycle units (DUKE 2000a). Duke therefore concludes that no further mitigation measures are proposed for the aquatic/marine resources related areas.

- **TERRESTRIAL ENVIRONMENT**

The applicant proposes the following mitigation measures in the AFC:

1. Appoint a designated biologist

2. Conduct surveys for California Legless Lizards prior to construction

During grading, excavation and off-loading in coastal dune scrub, a qualified biological monitor will be on site in order to detect any legless lizards that are unearthed. Legless lizards that are discovered should be translocated to suitable habitat.

3. Develop coastal dune scrub restoration plan for impacts to potential habitat of the Morro Shoulderband Snail and the California legless lizard. Although the coastal dune scrub on the site of the tank farm is degraded, as well as being potential habitat for the two species discussed above, coastal dune scrub is listed as a sensitive habitat in the CNDDB. A Coastal Dune Scrub Habitat Restoration/Enhancement Plan will be developed and implemented in an area of degraded coastal dune scrub west of the Project site. This plan includes removal of introduced beach grasses. The area will be revegetated with native dune species propagated from the vegetation from the disturbed sites or from the same species at adjacent sites. Monitoring of the restoration/enhancement area will be carried out over a period of 5 years with quantitative data collected on vegetation establishment and remedial actions proposed for areas not meeting established performance criteria.

4. Implement Burrowing Owl protection, burrow enhancement, and passive relocation. Impacts to the species could result if any of the following occur:
(a) Disturbance within 50 meters (approximately 160 ft.) which may result in harassment of owls at occupied burrows;
(b) Destruction of natural and artificial burrows (culverts, concrete slabs and debris piles that provide shelter to burrowing owls); and
(c) Destruction and/or degradation of foraging habitat adjacent (within 100m) of an occupied burrow(s).

Measures to mitigate potential impacts to the burrowing owl, the owl burrow and the encroachment into the 150 meter buffer zone around the known burrow will follow the CDFG staff report on burrowing owl mitigation:

- Any mitigation actions should be taken prior to the nesting season (action from
- September 1 to January 31).
- Pre-construction surveys of the Project site and the 150-meter buffer zone will be
- conducted 30 days prior to construction to ensure that no additional burrowing owls
- have occupied the site since the previous survey. If ground disturbance activity is
- delayed for more than 30 days following a pre-construction survey, then the site and
- the buffer zone will be re-surveyed.
- If burrows are found, but will not be impacted, they will be fenced prior to
- construction to ensure construction vehicles do not impact burrow sites.

- If owls are found on the Project site in areas proposed for construction, owls cannot be
- translocated during the breeding season (February 1 – August 31) unless a qualified biologist (approved by the CDFG) verifies non-invasively that either: 1) the owls have not begun egg-laying and incubating; 2) that juveniles have fledged, are foraging
- independently and are capable of independent survival.
- If the destruction of a burrow is unavoidable, then existing ground squirrel burrows will
- be enhanced (enlarged or cleared of debris). Alternative or enlarged burrows should be
- located at last 50 meters away from planned disturbance and in a protected area. A
- potential area currently exists along the fence line south of the burrow known to be
- utilized. The indicated area currently has three ground squirrel burrows. It is the closest, potentially suitable, protected area relative to the known burrowing owl burrow. These alternate burrows should be expanded according to CDFG approved burrowing owl construction protocol (CDFG Staff Report on Burrowing Owl Mitigation) in consultation with CDFG.
- If owls need to be moved away from disturbance areas and into modified or created
- burrows, then passive relocation techniques will be used rather than trapping. More
- than one week should be allowed to accomplish any relocation prior to the
- commencement of a project in order to allow the owls to acclimate to alternate
- burrows.

5. Avoidance of Morro Bay Blue Butterfly habitat and the planting of blue lupine.

The Morro Blue Butterfly is a federal species of concern known to occur in coastal dune scrub areas in the vicinity of the MBPP. It is almost always found in or in the vicinity of its host food plant Silver Beach Lupine *(Lupinus chamissonis*). Some Silver Beach Lupine plants occur within the tank farm site. No individuals of this butterfly species were observed on the MBPP property or the adjacent Den Dulk parcels. CEC staff expects that the Coastal Dune Scrub Restoration/Enhancement Plan (not submitted as of this writing), will mitigate for potential impacts to the habitat of the Morro Blue Butterfly and emphasize Silver Beach Lupine as one of the focal plant populations to protect and restore.

Construction traffic on the construction road planned to utilize the existing dirt road west of the tank farm could inadvertently injure wildlife species of the adjacent coastal dune scrub habitat. An exclusionary fence should be constructed on both sides of the access road during its use.

6. The development and administration of an employee environmental awareness program

7. Reduce noise impacts with quieter technology

CEC STAFF PROPOSED MITIGATION

Energy Commission staff finds the applicant's proposed mitigation for impacts to terrestrial biological resources to be incomplete and therefore inadequate. The applicant's mitigation regarding the loss of aquatic/marine biological resources is still inadequate and incomplete at this time.

Terrestrial Environment: The Applicant's proposed mitigation "Coastal Dune Scrub Restoration/Conservation Plan" concept for the potential loss of Morro Shoulderband Snails California legless lizards, and burrowing owl habitat has not been submitted to CEC staff for review as yet. An adequacy determination of its content cannot be made at this time.

The biologist retained to conduct the pre-construction surveys must be qualified, and use USFWS protocols for the Morro Shoulderband Snail and California legless lizard as proposed by the applicant.

The buffer zones and burrow construction mitigation strategies proposed by the applicant are not preferred because they will likely not be successful. Once the construction is complete, the owls may find the traffic, noise, and disturbance intolerable. The successful occupancy of man-made burrows is highly variable. Mitigation for loss of Burrowing Owl hunting and burrowing habitat and other sensitive habitats affected by the construction and use of roads, bike paths, and the bridge will be required based on an amount of acreage permanently and temporarily lost and affected. The applicant's proposed mitigation plan may be sufficient, however, staff has not seen a draft plan and therefore, cannot make a determination at this time. The mitigation for terrestrial impacts will be discussed in upcoming public meetings and workshops. Staff believes these issues are minor and can be worked out satisfactorily.

During construction, natural communities may be degraded by equipment storage related activities. The applicant has not provided information regarding laydown/storage areas. This will need to be discussed in the future, and mitigation considered as applicable.

Marine/Aquatic Environment

The section below provides a discussion of CEC staff's recommendations for mitigating impacts to marine/aquatic biological resources. Strategies for mitigation range from switching to alternate cooling technologies to *in-situ* fish protection barriers, *in–situ* habitat restoration, and *ex-sit*u habitat protection and restoration. This section also includes an assessment of alternative cooling technologies and calculations for habitat equivalency mitigation.

Energy Commission staff is required by Title 20, California Code of Regulations, Section 1765 (the Energy Commission's siting regulations) to examine the "feasibility of available site and facility alternatives to the applicant's proposal which

substantially lessen the significant adverse impacts of the proposal on the environment." The "Guidelines for Implementation of the California Environmental Quality Act" (CEQA), Title 14, California Code of Regulations, Section 15126.6, provides further direction by requiring an evaluation of the comparative merits of "a range of reasonable alternatives to the project, or to the location of the project, which would feasibly attain most of the project objectives."

➢ *ALTERNATIVE COOLING TECHNOLOGIES AND COOLING WATER INTAKE DESIGNS*

This review includes an evaluation of alternative cooling water and intake technologies that could mitigate impacts. Alternative technologies that are considered include:

1. Off-shore intake locations
2. Closed cooling water systems
3. Behavioral barriers
4. Diversion systems
5. Physical barriers
6. Fish collection, removal, and conveyance systems
7. Operational and flow-reduction alternatives

The effectiveness of some of these alternatives are highly dependent upon the local species of aquatic life and their reaction or response to the alternative designs. The various technologies are evaluated based on their effectiveness in reduction in the loss of aquatic organisms compared to the present conditions. Entrainment and impingement losses are considered in the evaluations. Entrainment is defined as the drawing in of organisms into the cooling water system and impingement as the retention of organisms on the intake screens. The final determination of the appropriateness to the technology is to be made not only on the physical design but also on the biological effectiveness of the design on the local organisms. Keep in mind that reducing or eliminating entrainment is the primary goal, although reductions in impingement are also desirable, they are not that beneficial if entrainment is not reduced.

➢ OFFSHORE COOLING WATER INTAKE SYSTEMS

Offshore cooling water intake locations would require the construction of large diameter pipe structures extending beyond the Morro Bay Harbor.
The applicant concluded that because of the large tidal exchange between the bay and the harbor that an offshore intake appears to offer little or no potential for reducing the losses of fishes and invertebrates entrained or impinged at the combined cycle unit's.

Staff thinks that changing intake locations only shifts the impacts to a new location with different species being impacted. Staff does not find this alternative beneficial.

➢ CLOSED-CYCLE COOLING WATER SYSTEMS

SWRCB Policy 75-58 states "…studies associated with power plants should include an analysis of the cost and water use associated with the use of alternative cooling

facilities employing dry, or wet/dry modes of operation." The heat rejection mechanism in wet cooling towers is primarily the evaporation of water to the atmosphere. Dry cooling towers transfer heat convectively through heat exchangers, while wet/dry hybrid cooling towers use combinations of the two mechanisms to reject heat to the atmosphere. Cooling towers use forced or induced draft fans to move ambient air through the tower. The ambient air temperature, humidity, velocity, and mass flow rate affect the heat transfer rate and, ultimately, the efficiency of the cooling tower. The cooling tower heat rejection efficiency and pump and fan loading affect the overall power plant thermal efficiency and output.

The fundamental differences between wet, wet/dry hybrid, and dry cooling towers are initial capital costs and heat rejection effectiveness. Dry cooling towers are two to three times more expensive than a wet system. Hybrid systems fall in the range between the two, depending upon the ratio of "wet to dry" cooling in the hybrid design. In general, the cost differences are due to the dry condenser, or heat exchanger, and taller and larger structures for dry and hybrid cooling systems. Despite the significant cost differences, dry and hybrid cooling systems are occasionally employed because they use less water and reduce the occurrence of visible plumes compared to wet systems. For wet/dry hybrid systems, the reduction in water use is dependent upon the percentage of dry versus wet. Dry and hybrid cooling systems are, however, less efficient in rejecting heat, and generally have higher parasitic (fan) electrical loads and can create a higher pressure (temperature) in the steam turbine condenser. Both of these factors decrease the thermal efficiency and power output of the project. The effects are not as significant on a combined cycle project as compared to a steam-cycle only project, in that the cooling system only affects the steam side of the combined cycle project and not the performance of the gas turbine. The effect would be greater at higher ambient temperatures because the relationship is non-linear. Additional fuel can be burned to overcome some or all of the loss of output, but the fuel will be an additional operating cost and will produce additional air pollutant emissions. Other characteristics include, for example, higher noise impacts for dry or hybrid cooling systems relative to a wet system due to larger fans to move more ambient air through the tower.

Closed-cycle cooling water technologies use mechanical draft recirculating cooling towers with either fresh water or seawater as the cooling medium. The application of this technology using freshwater would totally eliminate the need for the intake structure but would involve other impacts. The use of freshwater cooling that created an additional demand on the well water system or another freshwater source would be infeasible. If ocean water was desalinized, this source of freshwater would not decrease the available local freshwater sources. This cooling water source would use 5% to 10% of the volume of water used with once-through cooling. The use of desalinized ocean water is preferred over that of other sources of freshwater for power plant cooling. The ocean water would be taken from the existing or a new intake causing minor entrainment impacts. This alternative will be analyzed further for the FSA.

If salt water was used, the salt mist (drift) would cause impacts to the city of Morro Bay, and causes problems for the cooling structures also. Staff believes that using freshwater cooling towers with the water coming from desalinized ocean water is a preferable cooling system compared to once-through cooling in regards to biological resources impacts.

Another alternative to using desalinized fresh water would be to use treated wastewater. The closest source of wastewater is the Morro Bay-Cayucos Wastewater Treatment Plant. However, this plant produces only secondary treated wastewater at a capacity of 2.06 million gallons per day while the MBPP is estimated to require between 6 to 8 million gallons per day of tertiary treated wastewater. Therefore, there is an insufficient supply of treated wastewater available to meet the needs of the project.

Staff thinks a combination of water sources could be used also, for example desalinization water and recycled water for use in freshwater wet cooling. Staff has not had time to investigate this option fully, but will for the FSA.

Staff recommends dry cooling as the most preferable cooling option since it would not use water for cooling. For biological resources this would eliminate significant impacts to aquatic species. Other combinations of wet/dry cooling options could be beneficial in reducing biological resources impacts.

➢ **BEHAVIORAL BARRIERS**

Behavioral guidance technologies are designed to produce stimuli that can potentially alter the behavior of fish to produce avoidance responses and thus prevent entrainment into the water intakes. These technologies include the use of strobe lights, air bubble curtains, underwater sounds, mercury lights, electric barriers, and velocity caps. Studies and tests performed by the Electric Power Research Institute, as well as by Southern California Edison at its San Onofre Nuclear Generating Station have reached similar conclusions that the fish behavioral barriers installed and tested were not conclusive and were ineffective. Additionally, the SCE test concluded that no currently available alternative behavioral barriers are likely to be effective or feasible in reducing fish losses (SCE 2000).

5. Physical Barriers

Physical barriers principally are designed to block the passage of fish from entering the intake, usually in combination with low velocity. Examples of physical barriers include traveling and stationary screens, barrier nets, and mesh barriers. These may reduce impingement but not entrainment, and CEC staff does not recommend physical barriers other than the Gunderboom (discussed below).

➢ ***1) Traveling Screens***

Traveling screens have historically been used to block the intrusion of debris and fish from entering the cooling water systems of power generating facilities. More recently designs have included various fish handing and operational features to

reduce the impingement of fish. Vertical traveling screens equipped with fish lifting buckets will be addressed under Fish Collection, Removal, and Conveyance.

Drum type and Wedge-wire screens have been tested and found to have design problems that resulted in blockages, seals, and lack of bypasses. There have also been problems with the lack of accessibility to control bio-fouling of the interior surfaces by mussels, barnacles, and other organisms. These may reduce impingement but not entrainment and CEC staff does not recommend using these solely to reduce impingement.

➢ ***2) Barrier Nets and Meshes***

Barrier nets have the ability to exclude fish from water intakes by blocking the entrance to the intake structure. The mesh size and surface area of the net must be properly sized to block the fish passage but not cause the fish to become gilled in the net. Problems with this type of technology include blockage due to debris, clogging, bio-fouling, and labor intensiveness. A newer technology of this general type is the Gunderboom water permeable fabric curtain that has shown promise in some applications. However, a major problem with barrier nets and meshes at Morro Bay is that they would interfere with the navigation in the harbor.

Staff believes that the Gunderboom (Aquatic Filter Barrier) is worthy of further consideration at this time. The Gunderboom could possibly reduce impingement and entrainment significantly. CEC staff has concerns that there is insufficient area to install and operate the Gunderboom in Morro Bay. The Gunderboom would essentially eliminate the area it encompasses as available habitat for the species that use it now. That habitat loss would also have to be mitigated. The use of the Gunderboom would also require ecological monitoring in order to determine effectiveness. This system could be combined with some level of mitigation for lost biological resources (would be based on a sliding mitigation scale) depending on effectiveness findings. The Gunderboom could offer benefits and staff recommends it as an optional mitigation to be further analyzed.

6. Fish Collection, Removal, and Conveyance Systems

Fish collection technologies have been developed that either actively or passively collect fish for transport back to the source of the cooling water through a return system. These systems are designed to reduce impingement losses, and staff does not recommend them.

➢ ***1) Modified Traveling Screens***

Modifications have been incorporated into traveling screens to reduce the mortality of fish and organisms. These modifications incorporate the addition of water filled buckets that collect the fish and with the aid of low-pressure washes transport them into a sluice trough. The fish are then transported back to a safe release location. This system used in conjunction with continuous rotation of the screens may be a viable alternative for fish protection. Traveling screens are in use on the MBPP.

➢ ***2) Fine-Mesh Screens***

Fine–mesh screens with openings as small as 0.5 mm have been used in conjunction with traveling screens. The concept of using the fine mesh screens is that they will collect not only fish but also fish eggs and larvae. However, for some species impingement on the fine mesh screens can actually result in higher mortality than if the organisms were allowed to pass completely through the circulating water system. Therefore, it cannot be concluded that the use of fine mesh screens would enhance the prevention of impingement of early sea life forms. Staff doesn't see this as a useful option.

➢ **FISH RETURN CONVEYANCE SYSTEMS**

Fish return and conveyance systems may take the form of fish pumps or a gravity sluice system. New designs of fish pumps have demonstrated the ability to transfer fish with little or no mortality when coupled with fish bypass systems such as angled screens and louvers (EPRI 1999). In their draft 316(b) assessment report, the applicant concluded that "…a combination of a modification to the screens and their operation, and the installation of a modified screen wash gravity sluiceway return system for the intake may have potential for improving survival, and will be considered in the next step of the analysis"(Duke 2000). These may reduce impingement but not entrainment, and CEC staff does not recommend using these solely to reduce impingement.

➢ **DIVERSION SYSTEMS**

Fish diversion systems redirect the fish away from the impingement area to a return system or safe area for return to the ambient water source. Designs of such systems include angled screens, modular inclined screens, and louvers. These may provide minor benefit only for impingement losses.

➢ ***1) Angled Screens***

Traveling screens are set at an angle to the flow of the water (about 25°) in either a "V" or slant configuration. At the apex of the angle are fish bypass slots that collect the fish that are then pumped or sluiced back to the cooling water source. These may provide minor benefit only for impingement losses.

➢ ***2) Modular Inclined Screens***

The modular inclined screen consists of an inclined screen installed after the trash racks at a shallow vertical angle of 10-20° to the flow. Fish are directed to a transport pipe for return to the seawater source. These may provide minor benefit only for impingement losses.

➢ ***3) Louvers***

A louver system consists of an array of evenly spaced, vertical slats aligned across a channel at a specified angle, which leads to a bypass.

Results of testing of diversion systems have shown promise with reasonably high efficiencies. However, the results are highly dependent on swimming capabilities,

behavioral tendencies, life stages, and specific site characteristics of the local species.
Diversion systems discussed above may reduce impingement losses somewhat. Impingement is not a major source of loss or concern for MBPP.

➢ INTAKE MAINTENANCE AND OPERATIONAL MODIFICATIONS

To reduce flow velocities through the intake structure dredging to control sediment build up that would block cross-sectional area is an appropriate measure to be used. Additionally, reduction of circulating water pump operation during periods of reduced electrical loads is also considered a viable proposal with associated energy savings by reducing auxiliary load requirements. The applicant has indicated that the new combined cycle units will have multiple cooling water pumps which will allow reduced cooling water flows at less than maximum capacity operation. Operation in this manner will reduce the velocities through the intake system and thereby reduce both entrainment and impingement (DUKE 2000a, page 6.5-88). Staff is in favor of these reduction efforts, recommends that they be required as normal operational activities.

Biological Resources Tables 9 and 10 provide general comparisons of the benefits, applicability (to MBPP) and costs (table 10) of selected cooling intake fish protection technologies.

Biological Resources Table 9
Comparison of Technologies Available to Eliminate or Decrease Fish Mortality

➢ CATEGORY OF MITIGATION AND EXAMPLES	➢ LIFE STAGES POTENTIALLY PROTECTED	➢ APPLICABLE TO MBPP?	➢ MEASURE OF EFFECTIVENESS
➢ DRY COOLING	Eggs, larvae, juveniles, adults	➢ YES	Removes need for water withdrawl and eliminates entrainment and impingement
Diversions i.e. screens louvres	Eggs, larvae, juvenile, adults	No Impractical	Diversion efficiency Latent survival using tests and controls
Collection Systems i.e. pumps traveling screens	juvenile, adults	No For impingement only	Reduction in immediate or latent mortality

➢ PHYSICAL BARRIERS i.e. Gunderboom screens porous dikes barrier nets	Eggs, larvae, juvenile, adults	➢ **YES Gunderboom plus mitigation**	Reduction in entrainment and/or impingement
Behavioral Barriers i.e. lights acoustic air bubbles infra-sound	juvenile, adults	No For impingement only	Reduction in impingement

Source: EPRI 2000

The options listed in **Biological Resources Table 9** are those which significantly reduce biological resources losses due to impingement, entrainment, and thermal discharge. However, their designs may protect certain age classes (eggs, young, adults or all). In some cases the listed BTA options such as dry cooling would eliminate the adverse cooling water system impacts. In other cases the cooling water system impacts are significantly reduced (cooling towers) and could be balanced with reduced mitigation/compensation requirements. Certainly the costs listed in Table 10 below are a crucial aspect of the analysis of mitigation options.

BIOLOGICAL RESOURCES Table 10
Best Technology Available: Intake and Discharge vs. Cost ($millions)

Cooling Towers with Recirculating Cooling Water[1]	$10M
Air Cooled Condenser (Drycooling)[2]	$28M
Offshore Intake	$40M
Seasonal Operation Curtailment	$1-50M
Cooling Water Pump Flow Reduction	$3.3M
Gunderboom	$5M

1 The last four near shore power plants that applied to the California Energy Commission for Certification (Delta, Pittsburgh, Contra Costa, and San Francisco Energy) proposed cooling towers.
2 Three recent power plant projects have proposed dry cooling (Otay Mesa, Crockett, and Sutter).

➢ *PREFERRED MITIGATION*

One of the following mitigation options is recommended. They are listed in order of preference and priority:

1) Replace once-through cooling with **dry cooling, wet/dry hybrid, or wet cooling technology** (with freshwater from desalinization/recycled water).

2) Employment of **Gunderboom** technology **plus sliding scale mitigation** to be determined by the effectiveness of the technology in reducing the entrainment and impingement losses.

3) Mitigation resulting in bay/estuarine **habitat enhancement and restoration actions**.

➢ **PREFERRED MITIGATION: DRY COOLING**

The MBPP will cause significant impacts to the marine biota of Morro Bay/Estuary as a direct result of using once-through cooling. **Dry cooling technology** is the preferred mitigation because it would directly eliminate the causes of entrainment, impingement, and thermal discharge. CEC staff asserts that dry cooling is the best available technology to eliminate the adverse ecological effects of entrainment, impingement, and thermal plume (**Biological Resources Table 8**). **Wet/dry hybrid** and **wet cooling** are preferable to once-through cooling because they would reduce once-through cooling impacts by approximately 90 percent. Staff will further investigate these optional cooling technologies for the Final Staff Assessment.

➢ **GUNDERBOOM MITIGATION TO DECREASE IMPINGEMENT AND ENTRAINMENT**

A Gunderboom is an aquatic filter fabric with small holes that offers the possibility of significantly reducing entrainment and impingement. A Gunderboom may be engineered around the intake pipe so that small larvae and larger fish and invertebrates are not entrained or impinged. Gunderbooms are physical barriers which act as a screen to keep organisms out. However, they occupy significant areas of habitat and their deployment would result in the loss of the habitat within the Gunderboom area. Since Gunderbooms are largely an experimental technology for entrainment, monitoring for effectiveness will be an important part of approving this mitigation strategy. The resulting effectiveness can be used in combination with habitat equivalency mitigation to reduce impacts. Thus, CEC staff would require that consideration of the Gunderboom mitigation include extensive field assess-ments of effectiveness, as well as the need for additional mitigation, if the Gunderboom proved ineffective at reducing significant impacts.

➢ **MITIGATION: ENHANCEMENT AND RESTORATION OF HABITATS IN MORRO BAY/ESTUARY AND WATERSHED**

While not CEC staff's first choice for mitigation because it does not remove the cause of the ecological damage to aquatic biota, the protection, enhancement, and restoration of some of Morro Bay/Estuary's sensitive habitats, is considered by staff to be an acceptable option for mitigating the loss of biotic resources due to the once-through cooling system.

Habitat enhancement, improvement, and restoration actions are important strategies for mitigating for adverse impacts to entrained and impinged species because the fish depend on and will thrive in higher quality habitat. Secondly, it is not feasible to mitigate for larval and fish losses by breeding and stocking the bay to compensate for the losses. The Morro Bay Comprehensive Conservation Management Plan (CCMP) lists the following as priority problems:

- Rapid sedimentation
- Increased bacteria concentrations
- Increased nutrient concentrations
- Freshwater flow reductions
- Increased heavy metal and toxic pollutant concentrations
- Habitat loss
- Steelhead loss

Mitigation that provides funds to help address these problems would assist in enhancing and maintaining a sustaining environment for the Morro Bay/Estuary ecosystem.

A reasonable approach to determine the mitigation fund amount for the impacts from the MBPP is to calculate replacement acres equivalency and then the funds required to accomplish that replacement. This is called **Habitat Equivalency.** Habitat equivalency calculations are shown below and will be developed to help determine a fund amount based on a range of proportional losses, acre equivalency, and sample/estimate costs for restoration actions. If we use the 17% and 33% figures associated with Estuarine fish larvae proportional losses and assume the Morro Bay/Estuary complex is 2100 acres (MBNEP 2000), the habitat equivalency range is: 0.17 x 2100 = 357 acres, and 0.33 x 2100 = 693 acres. The habitat equivalency range is 357 to 693 acres. Habitat equivalency does not imply there was a loss of wetland or other sensitive habitats, only that this is a way of developing mitigation for the loss of aquatic resources to provide for land/wetland actions that can enhance and replace lost aquatic resource values. This range of acres and costs for mitigation are displayed in **Biological Resources Tables 11-13** (table 13 is most specific to the MBPP).

The Army Corps of Engineers (the Corps) has been working with the National Estuary Program (NEP) on habitat restoration in Morro Bay. A NEP representative provided staff with cost estimates for various types of restoration activities. They are displayed in the table below.

Biological Resource Table 11
Cost Estimates for Restoration Activities
in the Vicinity of Morro Bay

Restoration Activities	Land Acquisition & Equipment Cost Included (Y/N)	Area (acres)	Cost ($/acre)	Total Cost
Land Acquisition Ag/grazing/riparian	Yes	580	$10,000	$5,800,000
Land Acquisition Creek Bottomland	Yes	320	$12,000	$3,850,000
Land Acquisition on Los Osos Creek	Yes	40	$37,500	$1,500,000

Land Acquisition in Morro Bay State Park	Yes	15.5	$55,600	$861,800
Eelgrass bed planting	No	6	$48,000	$288,000
Removal and Recreation in new location	No	4	$75,000	$3,000,000
In-water Restoration	No	4	$109,000	$436,000
Mudflat creation Open water creation	No	2.5	$142,000	$355,000
Range of Costs:	Including land acquisition: $10,000 (non-wetland) - $56,000/acre Not including land acquisition of wetlands: $48,000-$142,000/acre			
Average = $66,000./acre				

Source: Mike Multari, NEP, pers. comm. (referencing Army Corps of Engineer estimates)

Biological Resources Table 12 provides a range of mitigation costs for wetland and open water creation and restoration in other locations along the California Coast.

Biological Resource Table 12
Costs of Wetland Restoration Along the California Coast

Location	Land Acquisition & Equipment Cost Included (Y/N)	Restoration Actions	Area (Acres)	Cost ($/acre)
SanOnofre[2] Horseworld property	Yes	1) Restoration	N/A	$260,000
SanOnofre[2] Airfield property SanOnofre[2]	Yes	1) Restoration	N/A	$152,750
Southern California Wetlands Restoration[3]	Yes	1) Restoration	N/A	$60,000-$180,000
Southern California[5]	Yes	1) Marsh creation 2) Marsh restoration	N/A	$139,000
Port of Santa Cruz[1]	Yes	1) Restoration	N/A	$100,000
Lower Santa Ana R. Orange County[5]	Yes	1) Restoration	N/A	$100,000

Southern California[5]	No	1) Marsh creation 2) Marsh restoration	N/A	$70,000
Upper Newport Bay[5]	No	1) Island removal (≈ 63,000 cy soil) 2) Island creation	4	$75,000
Bullnose[5]	No	1) Restoration	3.7	$109,000
Shellmaker Island[5]	No	1) Restoration	3	$109,000
Northstar Beach[5]	No	1) Creation (mudlfat & open water, removal of 37,000 cy soil) 2) Restoration	2.5	142,000
Estimate for Elkhorn Slough [4]	No	1) Restoration	N/A	$12,000-$25,000
Range of Costs:	**Including land acquisition: $60,000-$260,000/acre** **Not including land acquisition: $12,000-$109,000/acre**			
Average = $124,000./acre				

Sources:

1 Mr. Tim Duff of the California Coastal Conservancy, Pers. comm. Regarding wetland restoration at the Port of Santa Cruz.
2 California Coastal Commission staff recommendation: Permit Amendment and Condition Compliance for San Onofre Nuclear Generating Station for mitigation of adverse impacts to the marine environment. October, 1996.
3 Dr. Peter Raimondi. Pers. comm. wetland restoration work for which he has personal knowledge.
4 Dr. Peter Raimondi. Pers. comm. Minimum earth movement and disposal costs.
5 Mike Multari, NEP. Pers. comm. (referencing Army Corps of Engineer estimates)

Acquisition and restoration costs are variable and can be costly. In particular, mitigation conducted in and adjacent to Morro Bay is more expensive than upland work. Below in **Biological Resources Table 13** are examples of habitat equivalency derived mitigation fund amounts. These amounts are presented as an example for consideration. Any ultimate decision of amount will be worked out in public workshops and hearings as the certification process continues. It is apparent from this example that much consideration and justification must be put into the choice of values used in the habitat equivalency calculations.

Biological Resources Table 13
Habitat Equivalency Values for Ecological Compensation Of Entrainment

Fish Mortality Ranges from 316(b) Study	% Mortality of Larvae Population	Total Area of Morro Bay and Estuary (Acres)	Habitat Equivalency (%* Total Area)	Low Range Land Cost * Estimates (@ $66,000/Ac)	High Range Land Cost* Estimates (@ $124,000/Ac)

Low end of Range (%)	17%	2,100	357	≈$25.5 million	≈$44.2 million
High end of range (%)	33%	2,100	693	≈$45.7 million	≈$85.9 million
Range: 357-693 acres ≈ $29 to 45.7 M ≈ $44.2 to 85.9 M					

* formula = habitat equivalency acreage x cost/acre (i.e. 357 x $66,000 = $25.5 million)

➢ ***GENERAL MITIGATION MEASURES***

To ensure the likelihood of successful completion of required mitigation, the project owner should designate a **qualified biologist** to advise the project owner or its environmental project manager on the implementation of the Conditions of Certification. The biologist will also supervise and/or conduct mitigation, monitoring, employee awareness training, and other biology compliance efforts.

To promote project personnel's general understanding of the environmental concerns associated with the project, and, to enhance the likelihood of their compliance with the conditions of certification, the owner should administer a thorough **Employee Environmental Awareness Program.** Each of its employees, as well as those of contractors and subcontractors working on the project site during construction and operation, must be informed about all biological resource issues associated with the project.

To ensure that required biological resources mitigation measures are successfully completed during construction and operation of the project, a **Biological Resources Mitigation Implementation and Monitoring Plan (BRMIMP)** should be developed by the project owner and reviewed and approved by the Energy Commission Compliance Project Manager (CPM).

The project owner is required to cover open trenches at the end of the day. This is to prevent animals from becoming trapped in trenches, which are excavated during the installation of natural gas pipelines or other underground project features. Trenches much be checked regularly when open and trapped animals must be removed appropriately.

COMPLIANCE WITH LORS

CEC staff anticipates that the applicant will be in compliance with LORS upon obtaining all permits and complying with final conditions of certification.

FACILITY CLOSURE

The project owner must utilize methods and measures that protect the environment and public health and safety during the eventual permanent closure of the power plant project. To achieve this, the project owner will develop **an "On-site**

Contingency Plan" for facility closure as required in General Conditions of Certification. Detailed measures specifically addressing biological resources, such as structure removal and habitat restoration, should be done according to Biological Resources Condition of Certification **BIO-6**. The plan should also include the anticipated measures that would be implemented in case of a temporary, but prolonged closure.

CONCLUSIONS AND RECOMMENDATIONS

CONCLUSIONS

- The MBPP could result in potentially significant impacts to terrestrial biological resources. The applicant's Coastal Dune Scrub Restoration/Conservation Plan may adequately mitigate the terrestrial impacts. CEC staff will prepare final conclusions and recommendations pending future receipt of the plan and discussion of mitigation options.

- The MBPP will result in significant impacts to aquatic biological resources. Therefore, mitigation will be required. Thermal discharge and impingement impacts are not alone considered significant impacts, but contribute to significant cumulative impacts.

Direct impacts due to entrainment are considered biologically significant. Mitigation options and mitigation funds will need to be discussed publicly and analyzed thoroughly. Mitigation strategies will also encompass *cumulative impacts* caused by impingement and the thermal plume. CEC staff is confident that a satisfactory mitigation option can be determined to effectively mitigate impacts to non-significant levels. CEC staff will prepare final conclusions and recommendations pending future discussion of mitigation options.

RECOMMENDATIONS

Until the mitigation/compensation package for the once-through cooling system impacts is determined, the proposed project should not be approved. The mitigation/compensation package must be agreed to by the staff of the agencies (California Central Coast Regional Water Quality Control Board, California Department of Fish and Game, California Coastal Commission, the California Energy Commission, and the project applicant, Duke Energy Morro Bay LLC).

When the mitigation/compensation amount is determined to the satisfaction of both the California Energy Commission staff and the Central Coast Regional Water Quality Board staff for their NPDES permit, these mitigation/compensation measures should be incorporated into Energy Commission staff's proposed Conditions of Certification.

CONDITIONS OF CERTIFICATION

This section is incomplete pending the formulation of the conditions that deal specifically with mitigation and the implementation of the mitigation. There will be public hearings and workshops in June and July, which will assist staff in developing final conditions of certification.

BIO-1 Any ground disturbing activity (at the site and/or ancillary facilities) other than allowed geo-technical work shall not begin until an Energy Commission Compliance Project Manager (CPM) approved designated biologist is available to be on site.

The designated biologist must meet the following minimum qualifications:

1) A bachelor's degree in biological sciences, zoology, botany, ecology, or a closely related field;

2) Three years of experience in field biology and current certification of a nationally recognized biological society, such as the Ecological Society of America or The Wildlife Society;

3) One (1) year of field experience with biological resources found in or near the project area; and

4) The ability to demonstrate to the satisfaction of the CPM the appropriate education and experience for the biological resource tasks that must be addressed during project construction and operation.

If the CPM determines the proposed designated biologist to be unacceptable, the project owner shall submit another individual's name and qualifications for consideration.

If the approved designated biologist needs to be replaced, the project owner shall obtain approval of a new designated biologist by submitting to the CPM the name, qualifications, address, and telephone number of the proposed replacement.

Verification: No disturbance will be allowed in any designated sensitive area(s) until the CPM approves a designated biologist and that designated biologist is on-site. At least 30 days prior to the start of surface disturbing activities at the project site and/or at ancillary facilities, the project owner shall submit to the CPM for approval, the name, qualifications, address, and telephone number of the individual selected by the project owner as the designated biologist.

The project owner must submit the information on a replacement designated biologist to the CPM for approval 10 days prior to the actual replacement.

BIO-2 The CPM approved designated biologist shall perform the following duties:

1) Advise the project owner's supervising construction or operations engineer on the implementation of the biological resource conditions of certification;
2) Supervise or conduct mitigation, monitoring, and other biological resource compliance efforts, particularly in areas requiring avoidance or containing sensitive biological resources, such as, wetlands and special status species; and
3) Notify the project owner and the CPM of any non-compliance with any condition.

Verification: The designated biologist shall maintain written records of the tasks described above, and summaries of these records shall be submitted along with the Monthly Compliance Reports to the CPM.

BIO-3 The project owner's supervising construction and operating engineer shall act on the advice of the designated biologist to ensure conformance with the biological resource conditions of certification.

Protocol: The project owner's supervising construction and operating engineer shall halt, if needed, all construction activities in areas specifically identified by the designated biologist as sensitive to ensure that potential significant biological resource impacts are avoided.

The designated biologist shall:

1) Advise the project owner and the supervising construction and operating engineer when to resume construction; and
2) Advise the CPM if any corrective actions are needed or have been instituted.
3) Within two working days of a designated biologist notification of non-compliance with a Biological Resources condition or a halt of construction, the project owner shall notify the CPM by telephone of the circumstances and actions being taken to resolve the problem or the non-compliance with a condition.

Verification: For any necessary corrective action taken by the project owner, a determination of success or failure will be made by the CPM within five working days after receipt of notice that corrective action is completed, or the project owner will be notified by the CPM that coordination with other agencies will require additional time before a determination can be made.

BIO-4 The project owner shall develop and implement a Worker Environmental Awareness Program. An environmental awareness program shall be developed for construction employees and employees of contractors and subcontractors that may work in close proximity to sensitive areas. This shall include work associated with the new power plant, linear facilities, access roads, and laydown areas. All site supervision shall also receive this training.

Protocol: The Worker Environmental Awareness Program:

1) Shall be developed by the designated biologist and consist of an on-site or classroom presentation in which supporting written material is made available to all participants. This training can be part of the regular site orientation or a special training program based on employees task assignment;

2) Must discuss the locations and types of sensitive biological resources on the project site and adjacent areas;

3) Must present the reasons for protecting these resources;

4) Must present the meaning of various temporary and permanent habitat protection measures;

5) Must identify who to contact if there are further comments and questions about the material discussed in the program; and,

6) Shall inform workers of the potential biological resource impact risk associated with all construction and operational activities as is appropriate and emphasize protection of sensitive resources.

7) Each participant in the on-site Worker Environmental Awareness Program shall sign a statement declaring that they have received the training and will abide by the guidelines provided. These statements will be maintained on site until commercial operation.

Verification: At least 30 days prior to the start of surface disturbing activities at the project site and/or at ancillary facilities, the project owner shall provide copies of the Worker Environmental Awareness Program and all supporting written materials prepared by the designated biologist and the name and qualifications of the person(s) administering the program to the CPM for approval.

The project owner shall state in the Monthly Compliance Report the number of persons who have completed the training in the prior month and a running total of all persons who have completed the training to date.

BIO-5 The project owner shall submit to the CPM for review and approval a copy of the Biological Resources Mitigation Implementation and Monitoring Plan (BRMIMP) for this project.

Protocol: The BRMIMP shall:

1) Identify all sensitive biological resources to be impacted and avoided by project construction and operation;

2) Identify all mitigation, monitoring and compliance conditions included in the Commission's Final Decision;

3) Identify all conditions agreed to in any CDFG Streambed Alteration Agreement;

4) Design or apply insulation or use other measures on new above-ground facilities such as substations to reduce the risk of electrocution for large birds;

5) Clearly delineate construction area boundaries with stakes, flagging, and/or rope to minimize inadvertent degradation or loss of wetland habitat during construction activities;

6) Show all locations requiring temporary protection/signs during construction on a map of suitable scale;

7) Indicate duration for each type of monitoring established for mitigation actions and include a description of the monitoring methodologies and frequency;

8) Describe performance standards to be used to help decide if/when proposed mitigation is or is not successful;

9) Identify all remedial measures to be implemented if performance standards are not met

10) Reduce potential bird collisions with boiler stacks, cooling towers, turbine stacks and other structures by reducing exterior lighting on all structures to the minimum except for those required for power plant safety and aviation warning, while all other required exterior lighting on structures will be shielded to direct light downward;

11) Reduce soil erosion during construction and operation by applying measures identified in the proposed Soil Resources and Water Resources conditions of certification of the Energy Commission Decision for the project;

12) Reduce the potential for animal injury or death from falling into trenches or other excavated sites by covering them at the end of the workday if left unattended or by checking the trenches regularly and removing animals appropriately.

Verification: *At least 60 days prior to the start of surface disturbing activities* at the project site and/or at ancillary facilities, the project owner shall provide the CPM with the final version of the Biological Resources Mitigation Implementation and Monitoring Plan for this project, and the CPM will determine the plans acceptability within 15 days of receipt of the final plan. After the plan is approved, the project owner shall notify the CPM five working days before implementing any agreed to modifications to the Biological Resource Mitigation Implementation and Monitoring Plan.

Within 120 days after completion of construction, the project owner shall provide to the CPM for review and approval, a written report identifying which items of the Biological Resources Mitigation Implementation and Monitoring Plan have been completed, a summary of all modifications to mitigation measures made during the project's construction phase, and which condition items are still outstanding.

BIO-6 The project owner shall incorporate into a facility closure plan a Biological Resources Element that includes measures to promote the re-establishment of native plant and wildlife species; and

Protocol: For permanent closure, biological resource-related measures shall include:

1) The possible removal of all power plant site facilities;
2) Measures to restore wildlife habitat to promote the re-establishment of native plant and wildlife species; and
3) Updating the plan to address current biological resource issues.

Protocol: For temporary but prolonged closure, biological resource-related measures shall include:

1) Notifying the CPM within two weeks of the project owner's decision to initiate a temporary but prolonged closure; and
2) Turning off the once-through cooling water system pumps; and
3) Updating the plan to address current biological resources issues.

Verification: At least twelve months (or a mutually agreed upon time) prior to the commencement of permanent closure activities a Biological Resources Element will be incorporated into the Facility Closure Plan and the BRMIMP and submitted to the CPM for review and comment. The CPM will be notified within two weeks of the project owner's decision for a temporary, but prolonged closure and provide an updated plan of action.

Additional conditions will be added to the Final Staff Assessement.

REFERENCES

CAPE (Coastal Alliance on Plant Expansion) 2000b. Review of the Morro Bay Power Plant 316b and Thermal Effects Study Plans by Richard F. Smith, Ph.D., dated September 2000. Submitted to California Energy Commission on October 25, 2000.

CAPE (Coastal Alliance on Plant Expansion) 2000f. Letter from CAPE/Stephens and to CEC RE Marine Biological Resources, dated November 18, 2000. Submitted to the California Energy Commission on November 22, 2000.

CEC (California Energy Commission) 2000a. Memo from CEC/Larson to CEC/Commission RE Data Adequacy Recommendation for Morro Bay Power Plant, dated November 21, 2000. Submitted to California Energy Commission on November 22, 2000.

CEC (California Energy Commission) 2000b. Memo from CEC/Larson to CEC/Commission RE Revised Data Adequacy Recommendation for Morro Bay Power Plant, dated December 27, 2000. Submitted to California Energy Commission on December 28, 2000.

CEC (California Energy Commission) 2001a. Transmittal from CEC/Lewis to CEC/Moore and Keese RE Issue Identification Report, dated and submitted to the California Energy Commission on February 8, 2001.

DUKE (Duke Energy Morro Bay LLC) 2000a. Application for Certification, Volumes !a-1b, II-IV, Morro Bay Power Plant Project (00-AFC-12). Submitted to the California Energy Commission on October 23, 2000.

DUKE (Duke Energy Morro Bay LLC) 2000c. Geotechnical Investigative Report, dated August 2000. Submitted to California Energy Commission on October 25, 2000.

DUKE (Duke Energy Morro Bay LLC) 2000f. Letter from DUKE/Rosegay to Central Coast Regional Water Quality Control Board/Briggs RE NPDES No. CA0003743 Status Update and Thermal Plan Applicability, dated November 3, 2000. Submitted to California Energy Commission on November 14, 2000 (received in dockets on November 17, 2000.

Electric Power Research Instritute. 1999. Fish Protection at Cooling Water Intakes: Status Report. EPRI. Palo Alto, CA. TR-114013

Electric Power Research Instritute. 2000. Procedural Guidelines for Evaluating Alternative Fish Protection Technologies To Meet the Section 316(b) Requirements of the Clean Water Act. EPRI. Palo Alto, CA. 100551.

Goodwin. 1975. The Winter Season: Ontario Region. American Birds. 19(1):48-57.

Maehr, D.S., A.G. Spratt, and D.K. Voigts. 1983. Bird Casualties at a Central Florida Power Plant. Florida Field Naturalist. 11:45-68.

Raimondi, Peter. 2000. Personal communication via email from Dr. Raimondi. May 25, 2000.

Riverkeeper, Inc., Comments on EPA's Proposed Regulation for Cooling Water Intake Structures at New Facilities Under Section 316(b) of the Clean Water Act, November 17, 2000

Pisces Conservation Ltd., Technical Evaluation of USEPA Proposed Cooling Water Intake Regulations for New Facilities, prepared by P. A. Henderson and R.M. Seaby, November 2000

MBNEP (Morro Bay National Estuary Program/Multari) 2001a. Letter to CEC/Lewis RE Additional Questions and Comments on Workshop, dated February 27, 2001. Submitted to the California Energy Commission on March 7, 2001.

PG&E (Pacific Gas and Electric Co.) 1997a. Phase One Environmental Site Assessment, Morro Bay Power Plant, April 1997

PG&E (Pacific Gas and Electric Co.) 1997b. Phase Two Environmental Site Assessment, Vol. I, July 1997

Morro Bay National Estuary Program. 2000. Comprehensive Conservation and Management Plan. Morro Bay National Estuary Program.

USFWS (US Fish and Wildlife Service). 1999. Endangered and Threatened Wildlife and Plants; Designation of Critical Habitat for the Pacific Coast Population of the Western Snowy Plover, Final Rule. Federal Resister. December 7, 1999 (Volume 64, Number 234). Page 68508.

Weir, R.D. 1974. Bird Kills at the Lennox Generating Plant, Spring and Autumn 1974. Blue Bill. 21(4):61-62.

Zimmerman, D.A. 1975. The Changing Seasons. American Birds. 29(1):23-28.

Tenera 2001. 316 (a and b) studies on Entrainment, Impingement and thermal discharge for the Morro Bay Power Plant project.

CULTURAL RESOURCES

Dorothy Torres and Gary Reinoehl

INTRODUCTION

The purpose of this analysis is twofold. Staff evaluates potential impacts caused by the proposed project on previously identified cultural resources. Secondly, staff evaluates potential impacts to cultural resources that might be discovered as a result of activities during the over all construction and demolition process.

The term "cultural resource" is used broadly to include the following categories of resources that are specified pursuant to California Code of Regulations, Title 14, Chapter 11.5, Section 4852. A list of the categories is provided below:

(a) Types of resources eligible for nomination:

(1) Building. A resource, such as a house, barn, church, factory, hotel, or similar structure created principally to shelter or assist in carrying out any for of human activity. 'Building' may also be used to refer to an historically and functionally related unit, such as a courthouse and jail or a house and barn;

(2) Site. A site is the location of a significant even, a prehistoric or historic occupation or activity, or a building or structure, whether standing, ruined, or vanished where the location itself possesses historical, cultural, or archeological value regardless of the values of any existing building, structure, or object. A site need not be marked by physical remains if it is the location of a prehistoric or historic event, and if no buildings, structures, or objects marked it at that time. Examples of such sites are trails, designed landscapes battlefields, habitation sites, Native American ceremonial areas, petroglyphs, and pictographs;

(3) Structure. The term 'structure' is used to describe a construction made for a functional purpose rather than creating human shelter. Examples of structures included mines, bridges and tunnels;

(4) Object. The term 'object' is used to describe those constructions that are primarily artistic in nature or are relatively small in scale and simply constructed, as opposed to a building or a structure. Although it may be movable by nature or design, an object is associated with a specific setting or environment. Objects should be in a setting appropriate to their significant historic use, role, or character. Objects should be in a setting appropriate to their significant historic use, role or character. Objects that are reloaded to a museum are not eligible for listing in the California Register. Examples of objects include fountains, monuments, maritime resources , sculptures, and boundary markers; and

(5) Historic district. Historic districts are unified geographic entities which contain a concentration of historic buildings, structures, objects, or sites united historical, culturally, or architecturally. Historic districts are defined by precise geographic boundaries. There fore, districts with

unusual boundaries require a description of what lies immediately outside the area in order to define the edge of the district and to explain the exclusion of adjoining areas. The district must meet at least one of the criteria for significance discussed in Section 4852 (b)(1)-(4) of this chapter.

When a cultural resource is determined to be historically significant or significant in the architectural, engineering, scientific, economic, agricultural, educational, social, political, military, or cultural annals of California it may be considered to be an "historical resource" and eligible for inclusion in the California Register of Historic Resources (CRHR).

If the archaeological resource does not meet the criteria for an historical resource, it may be assessed to determine whether it meets the criteria of a unique resource as defined in the Public Resources Code.

This Preliminary Staff Assessment will provide an overview of procedures used to identify cultural resources in the project vicinity. If cultural resources are identified, staff determines whether there may be a project related impact to identified resources and if the resource is eligible for the CRHR, then staff recommends mitigation that will reduce the impact to the historical resource to a less than significant level.

There is also a potential that a project may impact a resource that has not been previously discovered or impact an historical resource in an unanticipated manner. Staff also recommends procedures that mitigate these potential impacts.

Two prehistoric sites are located in the vicinity of the Morro Bay Power Project. Both previously recorded sites have been recommended as significant and is therefore likely to be eligible for CRHR. Staff concurs with these archeological assessments. Discoveries of human remains have occurred at these sites previously and there is considerable concern in the Native American Community regarding ground disturbance in the project area. Staff's proposed mitigation is intended to incorporate Native American representatives in the construction and demolition process to ensure that potential impacts to cultural resources are mitigated below a level of significance.

LAWS, ORDINANCES, REGULATIONS, AND STANDARDS (LORS)

FEDERAL

Code of Federal Regulations, 36 CFR Part 61. Federal Guidelines for Historic Preservation Projects: The U.S. Secretary of the Interior has published a set of Standards and Guidelines for Archaeology and Historic Preservation. These are considered to be the appropriate professional methods and techniques for the preservation of archaeological and historic properties. The Secretary's standards and guidelines are used by federal agencies, such as the Forest Service, the Bureau of Land Management, and the National Park Service. The State Historic

Preservation Office refers to these standards in its requirements for mitigation of impacts to cultural resources on public lands in California.

- National Historic Preservation Act, 16 U.S.C. § 470, commonly referred to as Section 106, requires federal agencies to take into account the effects of their undertakings on historic properties through consultations beginning at the early stages of project planning. Regulation revised in 1997 (36 CFR Part 800 et. Seq.) set forth procedures to be followed for determining eligibility of cultural resources, determining the effect of the undertaking on the historic properties, and how the effect will be taken into account. The eligibility criteria and the process are used by federal agencies. Very similar criteria and procedures are used by the state in identifying cultural resources eligible for listing in the California Register of Historical Resources.

STATE

- Public Resources Code, Section 5020.1 defines several terms, including the following:

  (j) "Historical resource" includes, but is not limited to, any object, building, structure, site, area, place, record, or manuscript which is historically or archaeologically significant, or is significant in the architectural, engineering, scientific, economic, agricultural, educational, social, political, military, or cultural annals of California.

  (q) "Substantial adverse change" means demolition, destruction, relocation, or alteration such that the significance of an historical resource would be impaired.

- Public Resources Code, Section 5024.1 establishes a California Register of Historic Resources (CRHR). The implementing regulations are California Code of Regulations, Chapter 11.5, Section 4850 et seq.
- The California Environmental Quality Act (CEQA) (Public Resources Code, Section 21000 et seq.; Title 14, California Code of Regulations, Section 15000 et seq.) requires analysis of potential environmental impacts of proposed projects and requires application of feasible mitigation measures.
- Public Resources Code Section 21083.2 states that the lead agency determines whether a project may have a significant effect on "unique" archaeological resources; if so, an EIR shall address these resources. If a potential for damage to unique archaeological resources can be demonstrated, the lead agency may require reasonable steps to preserve the resource in place. Otherwise, mitigation measures shall be required as prescribed in this section. The section discusses excavation as mitigation; limits the applicant's cost of mitigation; sets time frames for excavation; defines "unique and non-unique archaeological resources"; and provides for mitigation of unexpected resources.
- Public Resources Code Section 21084.1 indicates that a project may have a significant effect on the environment if it causes a substantial adverse change in the significance of a historic resource; the section further defines a "historic resource" and describes what constitutes a "significant" historic resource.

- CEQA Guidelines, Title 14, California Code of Regulations, Section 15126.4(b)
- prescribes the manner of maintenance, repair, stabilization, restoration, conservation, or reconstruction as mitigation of a project's impact on a historical resource; discusses documentation as a mitigation measure; and discusses mitigation through avoidance of damaging effects on any historical resource of an archaeological nature, preferably by preservation in place, or by data recovery through excavation if avoidance or preservation in place is not feasible. Data recovery must be conducted in accordance with an adopted data recovery plan.
- CEQA Guidelines, Section 15064.5 defines the term "historical resources," explains when a project may have a significant effect on historic resources, describes CEQA's applicability to archaeological sites, and specifies the relationship between "historical resources" and "unique archaeological resources."
- Penal Code, Section 622 1/2 states that anyone who willfully damages an object or thing of archaeological or historic interest is guilty of a misdemeanor.
- California Health and Safety Code, Section 7050.5 states that if human remains are discovered during construction, the project owner is required to contact the county coroner.
- Public Resources Code, Section 5097.98 defines procedures for notification of discovery of Native American artifacts or remains and for the disposition of such materials. This section also prohibits obtaining or possessing Native American artifacts or human remains taken from a grave or cairn and sets penalties for these actions.
- Public Resources Code Section 5097.99 provides restrictions on the possession of human remains or grave related artifacts. Part (b) specifies exceptions and states a person in violation of this section is guilty of a felony. Part (c) expands the section to say that any person, not under authority of law, who removes Native American artifacts or human remains with an intent to sell or vandalize them is guilty of a felony.

CITY OF MORRO BAY

The Proposed Land Use Plan of the Local Coastal Program provides policies to address the City's concerns regarding cultural resources. The Plan was adopted in June of 1981 and amended in January and September of 1982. Since the City adopted these policies, there have been additions to state law that offer additional protection for human remains and grave related goods on private property. (See list of relevant state laws in this analysis).

The General Plan of Morro Bay, adopted in 1988, also provides the following protection for archaeological resources: The policies adopted by the City include a requirement that a qualified archaeologist perform an archaeological reconnaissance before a permit is issued in any areas containing potential archaeological sites. If a site is found, the City will require mitigation measures to protect it (City 1988, p. 114-117).

If any property in public ownership that contains a site is transferred from City to private ownership, there will be a deed restriction with provisions that protect the archaeological site. In addition, "All available measures, including purchases, tax relief purchase of development right etc. shall be explored to avoid development on significant archaeological sites" (City 1981, p. 95 to 98).

ENVIRONMENTAL SETTING

REGIONAL DESCRIPTION

The project is located in central San Luis Obispo County which is for the most part located within the southernmost area of the Coast Range Geomorphic Province (Duke 2000a, p. 6.3-3). This geomorphic province is an area of differing landforms with both coastal terraces and cliffs that rise straight up from the shore (Morratto p.218). Coastal terraces often provided a desirable environment for habitation of prehistoric people.

PROJECT VICINITY DESCRIPTION

The project is located in the vicinity of Estero Bay and is located at the extreme northern end of Morro Bay (Duke 2000a p. 6.7-7, Duke 2000a1 p. 2). It is situated approximately 12 miles northwest of San Luis Obispo in the city of Morro Bay with the Pacific Ocean on the west and rolling hills to the east. Alluvia and sand dune deposits surround it. Morro Rock is the prominent geologic feature in the area and is considered to be an eroded volcanic neck (Duke 2000a p. 6.3-3). The climate is cool and moist in winter and warm/moderate and dry in summer. Surface bodies of water within the project vicinity are Morro Bay, Estero Bay, Willow Camp Creek and Morro Creek (Duke 2000a, p. 6.5-7). Morro Bay has retained its present form since approximately 6,000 to 7,000 years before present (ybp). Morro Bay is an Estuary, and obtains most of its fresh water flow from Chorro and Los Osos Creeks which are situated approximately in the middle of the bay (Duke 2000a, p 6.5-25). Morro Bay is an area that was rich in both fresh water and ocean plants and fish and has provided a desirable habitation site for human beings over thousands of years . Refer to the **PROJECT DESCRIPTION** section of this Preliminary Staff Assessment for a regional map of the project development area.

PREHISTORIC SETTING

The Cultural Resource Confidential Technical Report, submitted by the applicant, asserts that people inhabited the area for at least 8,500 years before present. Although anthropologists and archaeologists have differing opinoins about the nature of occupancy, it appears that both Chumash and Salinan people were present during prehistoric times in the vicinity of Morro Bay. There is historical evidence that indicates at least one prehistoric Native American village existed within the project area of potential effect (APE) (Duke 2000a1, pg. 3). The boundaries of Salinan and Chumash territory before European contact are the subject of present day disputes between representatives of the Chumash and Salinan communities and between authorities in the fields of archaeology and anthropology. It is not within the scope of this analysis to resolve these disputes.

Two previously recorded archaeological sites have been identified within the project vicinity. The applicant is currently excavating and evaluating a site to determine its eligibility to the California Register of Historic Resources (CRHR).

HISTORIC SETTING

The earliest European contact occurred when Sebastian Rodriquez Cermento arrived in Estero Bay in 1595. He was soon followed by other explorers, and in 1772 Mission San Luis Obispo was established.

A naval station was built on the project site in 1941 and 1942 and in 1953, PG&E built the existing plant (Duke 2000a, Vol IV. Appendix 6-10, p2, 3). According to a July 7, 1955 article in the San Luis Obispo Telegram Tribune, " the new smokestack was considered a tourist attraction." Numerous newspaper articles lauded the building of the plant. The applicant is conducting an inventory of historical resources and information contained in that report will be discussed in the Final Staff Assessment.

RESOURCES INVENTORY

As part of the preparation of the Application for Certification (AFC), consultants to the applicant conducted archival research, a pedestrian survey, and Native American consultation.

ARCHIVAL RESEARCH

The applicant conducted a record search at the Central Coast California Historical Resources Information System (CHRIS). The search included an area extending one mile from Morro Bay Power Project (MBPP) property boundaries (Duke 2001a, p. 4). These searches were conducted to establish location of known resources within the project area. The background searches provided a basis from which to predict the archaeological potential of the project area and were also used to provide a context for the evaluation of the significance of known or previously unknown resources that may be affected by the project.

A letter dated February 16, 1999, from the Central Coast CHRIS provided information that 10 archaeological surveys had been conducted within the one-mile radius. Ten prehistoric sites were identified; however there was no record of historical resources. The letter also indicated that most of the area has not been surveyed (Duke/Trump 2001a).

The record search revealed that previous surface and subsurface archaeological investigations had been conducted in the vicinity of the existing and proposed project. Site CA-SLO-16 was assessed by Roberta Greenwood in a survey report completed in 1973. A report by John Clemmer in 1962 identifies components at Site CA-SLO 239 that he believes may answer important research questions. Greenwood and Clemmer recommend these sites as significant in history and therefore eligible for the CRHR (Duke 2000a1, p. 4 and Duke2001a1, p.1).

ARCHAEOLOGICAL FIELD SURVEYS

The applicant conducted a pedestrian field survey that totaled 40 acres, by walking transects across the property at 3-meter intervals. The survey covered all proposed construction areas and selected outlying acreage. Specifically, the survey area included, "…the ground and berms around all existing oil storage and processing tanks, the old plant access road to a distance of 10 meters on either side of the road. The entire bluff-top area at the plant's southeastern end, a triangular area between Morro Creek and Willow Camp Creek north of Tank #5, and a stretch of dunes immediately west of the Embarcadero both south and north of Morro Creek." (Duke 2000a,1 p. 5). The sidewalls of cut banks and eroded areas were examined for evidence of cultural resources.

Between July 5 and July 13, 2000, Dr. John Parker, archaeologist, and geoarchaeologist Jeff Parson, assisted by San Luis Obispo County Chumash Council (SLOCCC) representative Mark Vigil, drilled 24 5 inch diameter holes. The purpose of the testing was to sample subsurface soils within the proposed project area. Ten holes were drilled to a depth of 16 feet. The rest of the holes were drilled to bedrock, generally 60 to 80 feet (Duke 2000a1, Geotechnical p. 2). The Confidential Cultural Geotechnical report identified soil chemistry that suggested the existence of buried cultural resources in the vicinity of test holes, B8, B10 and B24. Continuing excavation and evaluation is now underway in the area of test holes, B8 and B10 (Duke 2000a1, Geotechnical p. 17).

NATIVE AMERICAN CONSULTATION

The applicant contacted the State of California Native American Heritage Commission (NAHC) requesting a search of the Sacred Land File to obtain information regarding traditional cultural properties such as cemeteries and sacred sites in the project area. The NAHC maintains a list and maps of traditional resource sites located throughout the state. The Heritage Commission also refers staff, applicants, consultants, and members of the public to representatives of the Native American community who wish to be contacted regarding construction related ground disturbances in their area. The NAHC responded with a list of Native American contacts for the general project area. Individuals or groups were contacted for the original project in 1999 and an additional list was obtained and letters were sent, by the applicant, on March 7, 2001, to inform Native Americans regarding the newly amended project (Duke 2001b1)

The NAHC search of the Sacred Lands file dated February 28, 2001 indicated that no known traditional cultural use areas were located within the immediate project area. The record search conducted at the Central Coast CHRIS also failed to indicate the presence of Native American traditional cultural properties. However, information provided to staff under confidential cover indicated that CA-SLO-16 and CA-SLO-239 had been registered with the NAHC as a Salinan traditional cultural use areas (PSHS 2000a1, map). The request to the NAHC for information did not identify the areas as registered because the areas already had trinomial designations from the CHRIS identifying them as previously recorded archaeological sites. It is not NAHC policy to identify traditional cultural use areas

that have previously been registered as archaeological sites and assigned trinomial designations (NAHC 2001a).

In order to accommodate Native American concerns, Duke entered into a Memorandum of Agreement (MOA) with the San Luis Obispo County Chumash Council. Additional efforts were made both by Duke and the SLOCCC to involve Native Americans who were not affiliated with the SLOCCC (Duke 2000a, Vol IV Appendix 6.7-4). The MOA was subsequently finalized and a copy appears in Volume IV of the AFC.

Native Americans who were not affiliated with the SLOCCC expressed concern that the SLOCCC could not adequately represent them regarding the treatment of human remains, artifacts that might be found or concerns regarding Morro Rock . This opinion was expressed through phone calls to the NAHC, through phone calls and letters to staff at the Energy Commission, and through comments in public workshops.

It is the policy of the Energy Commission to encourage public participation and address public concerns regarding the projects in the permitting process. In keeping with Energy Commission policies, staff arranged to meet with members of the Native American community who wished to express concerns regarding the project. Cultural resource staff and the Energy Commission Public Advisor Roberta Mendonca met representatives of the Native American community on April 7, 2001 to provide information regarding the permitting process and to hear concerns. The meetings were attended by Native Americans who identified themselves as affiliated with the Northern Chumash Council, the SLOCCC and the Salinan Nation, including the Playano Salinan Family Group. On April 23, 2001, staff met with representatives of the Santa Ynez Reservation and Tribal Elders Council.

On April 7, the concerns expressed centered on the potential treatment of human remains and other grave related items that might be unearthed during construction. There was concern that the treatment of burial items and human remains should be culturally appropriate. Several people said that testing of human bone is not appropriate treatment of human remains.

In addition, Native Americans expressed concern about the qualifications of Native American cultural resource monitors. They stated that monitors should be able to demonstrate a lineal connection to the area they are monitoring. Although the NAHC provides “Guidelines” for monitoring, they do not require that a relationship to an area be demonstrated for monitors. Some people stated that monitors played an important role in educating construction workers regarding Native American perspectives concerning human remains and artifacts.

Several people said they believe that Duke should deal with all Native American groups directly and not expect them to go through another entity. These people wanted to personally provide culturally relevant information.

Representatives of the Santa Ynez Reservation said that they didn't have enough information to be able to comment on the project. Staff is in the process of providing additional information and if they choose to comment, those comments will be reflected in the FSA.

It is incumbent upon Energy Commission staff to consider and address comments from other state and federal entities that have an interest in projects under review. Comments from the NAHC regarding MBPP, dated March 26, 2001 involve the participation of concerned Native Americans in projects in general and specifically the MBPP project. "The APE lies in an area of disputed indigenous occupation between current Chumash and Salinan descendants" (NAHC 2001). An additional comment continues "The NAHC's policy in this disputed area, in cases of inadvertent discoveries of Native American human remains, is to identify 'Most Likely Descendants' from both cultures to respond pursuant to California Public Resources Code Section 5097.98."

CHARACTERIZATION OF IDENTIFIED RESOURCES

Laws identified in the LORS section of this document apply to the treatment of cultural resources. These laws require the Energy Commission to categorize resources by determining whether they meet several sets of specified criteria. These categories then in turn influence the analysis of impacts to the resources and the activities that may be required to mitigate any such impacts.

Under federal law, only historic or prehistoric sites, objects or features, or architectural resources that are evaluated by a qualified researcher as "important" or "significant' in accordance with federal guidelines typically need to be considered during the planning process. The significance of historic and prehistoric cultural resources is judged in accordance with the criteria for eligibility for nomination to the National Register of Historic Places as defined in 36 CFR 60.4 or to the California Register of Historic Resources. If such resources are determined to be significant, and therefore eligible for listing in either of these registers, they are afforded certain considerations under the National Historic Preservation Act.

The National Register criteria state that "eligible historic properties" are: districts, sites, buildings, structures, and objects that possess integrity of location, design, setting, materials, workmanship, feeling, and association, and that:

(a) are associated with events that have made a significant contribution to the broad patterns of our history;

(b) that are associated with the lives of persons significant in our past;

(c) that embody the distinctive characteristics of a type, period, or method of construction, or that represent the work of a master, or that possess high artistic values;

(d) that represent a significant distinguishable entity whose components may lack individual distinction; or

(e) that have yielded or may be likely to yield, information important to history or prehistory. Isolated finds by definition do not meet these criteria.

Isolated finds by definition do not meet these criteria.

Resources determined not to be significant under the NHPA, that is not eligible for Nation Register listing, are subject to recording and documentation only, and are afforded no further consideration. However, occasionally certain resources, although they may not be eligible for inclusion in the NRHP may nonetheless be of local or regional importance such that mitigation may be warranted regardless of their assessed NRHP significance. Staff evaluates any known resources located within or adjacent to the project APE to determine whether they meet these eligibility criteria.

A resource is considered to be "historically significant" and eligible for listing in the California Register of Historical Resources if it meets one of the following criteria:

1. It is associated with events that have made a significant contribution to the broad patterns of California's history and cultural heritage;
2. It is associated with the lives of persons important in our past;
3. It embodies the distinctive characteristics of a type, period, region, or method of construction, or represents the work of an important creative individual, or possesses high artistic values;
4. It has yielded, or may be likely to yield, information important in prehistory or history [California Code of Regulations, Title 14, Section 15064.5(a)(3)].

The CEQA guidelines require the lead agency (in this case, the Energy Commission) to make a determination of whether a proposed project will affect "historical resources" and sets forth a listing of criteria for making this determination. As used in CEQA, the term "historical resources" includes any resource, regardless of age, as long as it meets these any of these criteria. If the criteria are met, the Energy Commission must evaluate whether the project will cause a substantial adverse change in the significance of that historical resource, which the regulations define as a significant effect on the environment. California Code RegulationsTitle 14, Section 15064.5 offers the following guidance:

- A resource listed in, or determined to be eligible by, the State Historical Resources Commission, for listing in the California Register of Historical Resources (Pub. Res. Code Section 5024.1, Title 14 CCR, Section 4850 et seq.);
- A resource included in a local register of historical resources, as defined in Section 5020.1(k) of the Public Resources Code or identified as significant in an historical resource survey meeting the requirements Section 5024.1(g) of the Public Resources Code, shall be presumed to be historically or culturally significant. Public agencies must treat any such resource as significant unless the preponderance of evidence demonstrates that it is not historically or culturally significant; or
- Any object, building, structure, site, area, place, record, or manuscript which a lead agency determines to be historically significant or significant in the architectural, engineering, science, economic, agricultural, educational, social,

political, military or cultural annals of California may be considered to be an historical resource, provided the lead agency's determination is supported by substantial evidence in light of the whole record.

If the criteria are met, the Energy Commission must evaluate whether the project will cause a substantial adverse change in the significance of that historical resource, which the regulations define as a significant effect on the environment.

Using the above criteria, staff has determined that the cultural resource sites described in the AFC meet one or more of the criteria for being an historical resource. The isolate does not meet those criteria.

CEQA establishes limitations on applicants' costs of mitigation for, and does not require discussion of, archeological resources that are not unique (Public Resources Code, section 21083.2). The statute also provides a definition of unique archeological resources. However, the CEQA Guidelines state that this prohibition does not apply when an archeological resource also meets the definition of an historical resource (California Code of Regulations, Title 14, Section 15064.5). Because staff has determined that the impacts for which it is recommending mitigation do meet the definition of historical resources, the prohibition does not apply to the mitigation discussed in this Preliminary Staff Assessment.

IMPACTS

Impacts to cultural resources may result either directly or indirectly during the ground preparation, construction, and operation phases of a project. Direct impacts are those which may result from the immediate disturbance of resources, whether from vegetation removal, vehicle travel over the surface, excavation or other earth-moving activities. Direct impacts may include alteration of the surrounding built environment such that the significance of an historical resource would be materially impaired. Indirect impacts may result from increased erosion due to site clearance and preparation, or from inadvertent damage or outright vandalism to exposed resource materials due to improved accessibility. Since Morro Bay is an area where many archaeological sites have previously been identified, cumulative impacts to cultural resources may occur if increasing amounts of land are cleared and disturbed for the development of multiple projects in the vicinity of the proposed project.

The potential for the project to cause impacts to cultural resources is related to the likelihood that such resources are present and whether they are encountered during project development and construction activities. Although the existence of known cultural resources indicates further potential for unknown resources to be encountered, the absence of known resources does not necessarily mean that unknown resources will not be encountered and that impacts will therefore not occur. In addition, the potential for discovery does not measure the significance of individual artifacts or other cultural resources present, since it is impossible to accurately predict what specific materials could be encountered. Furthermore, sometimes the full significance of discovered cultural resources can only be

determined after they have been collected, prepared, and studied by professional archaeologists.

Project elements described in the **PROJECT DESCRIPTION** section of this Preliminary Staff Assessment may have the potential to cause significant impacts to cultural resources

PROJECT-RELATED IMPACTS

Because project-related site development and construction would include ground disturbance, the proposed project has the potential to adversely affect previously unknown cultural resources. Two archaeological sites are within the project APE, and additional features, objects, buildings, or structures are known to be located in the vicinity of the proposed project. These include historic-era buildings and structures. An additional soil deposit is being tested to determine if it is a cultural resource and if it is a cultural resource, determine its eligibility for the CRHR (Duke 2000d1).

The preparation of land and construction of MBPP in the area of the tank farm and demolition of the existing plant have the potential to impact identified resources and to unearth previously unidentified resources. This analysis will only discuss site location in a general way to assure exact site location confidentiality.

The MBPP project will use existing transmission lines (Duke 2000a, p. 2-64.) and new pipelines will not be required outside the project area (Duke 2000a, p. 2-81).

The project would be located in the area now occupied by oil storage tanks. Oil tanks will be demolished and removed prior to construction of the new plant (Duke 2000a, p. 2-10). The tank area is covered with fill. The level of fill varies from 4' to 10' (Duke 2000a1, Geotechnical Report, p.5). "Most of the tank farm area was originally a sand dune that was graded as part of site development. The hydraulic fill unit consisting of silty sand, was dredged locally and placed on the tidal flats by the United State Navy in 1941 and 1942"(Duke 2000a, p. 2-10).

Most of the work to remove tanks 1 through 5 will occur within exterior berms surrounding the tank area of about 15 acres. Additional work will occur outside the bermed area to remove pipes and other equipment in an area of about 9 acres. There is additional work planned for traffic mitigation and information is not conclusive as to whether there will be ground disturbance. There is a site in the vicinity of planned road improvements that has been determined eligible to the NRHR.

A sound wall will be located on top of the berm that is south of Morro Creek and the Fisherman's Gear storage facility and the project site will be landscaped to reduce visibility of the plant. The berms surrounding the tank farm will be engineered to blend in with the landscaping. The applicant proposes the construction of several new bike and pedestrian paths that will create a bicycle/pedestrian loop around the MBPP property (Duke 2000a , p. 2.-23).

Morro Rock has been identified as a traditional cultural property by representatives of both the Salinan and Chumash communities. The concern has been raised regarding noise from the plant interfering with the traditional use of Morro Rock.by Native Americans. Duke asserts that the new plant will be quieter than the existing plant. Noise suppression would be engineered on project features such as the stacks and a sound wall would be built on top of the berm, south of Morro Creek (Duke 2000a, pp.1-26 & 2-24). Since the new plant will be quieter than the existing plant, it appears that there will be no significant adverse impacts to this cultural resource from noise.

In addition, questions were raised regarding impacts from the project on a medicine plant named Indian Pink (Silene spp) (PSHS 2000a1, enclosure). An additional concern centered around the welfare of the peregrine falcons on the Rock. Effects to this resource for traditional use can not yet be assessed. Additional information on biological impacts is needed to complete this analysis in the FSA.

Two sites are present within the vicinity of the project. Archaeologists have recommended that the sites meet the criteria for eligibility to the CRHR and are therefore significant resources. Staff agrees with this significance recommendation. The applicant has indicated that methods including fencing and cultural resources monitoring would be used to protect previously recorded resources and it would be possible to avoid them. However, additional information on the methods used to determine the boundary of one site has been requested. Until the adequacy of the delineation of the boundary is reviewed, effects to this site can not be determined. A determination will be provided in the FSA.

Evidence from the area indicates that there is a potential for impacts to occur to previously undiscovered resources both in areas previously identified as containing resources and in areas where none have been identified. One site in the area of the tank farm is currently being investigated to determine if it is a significant cultural site. If it appears that this location is actually an archaeological site, archaeologist Dr. John Parker would begin data collection as mitigation.

New combined cycle units will use the existing seawater channels and Duke will refurbish the exterior façade of the existing water intake building on the waterfront one year after commercial operation of the combined cycle units. The intent is to make the water intake building more architecturally compatible with the City's goals for the waterfront (Duke 2000a, p.2-19). A discussion of impacts caused by the refurbishing of the existing water intake building on the waterfront will be provided in the FSA after the report on historical resources is received.

According to the AFC, the demolition activities at the existing plant are expected to take four years. Mitigation measures in the conditions of certification that are applicable to the entire project apply to the demolition phase of the project. Apart from impacts to historic resources, which will be assessed after additional information is received, there will be no significant adverse impacts caused by demolition of the existing plant

Impacts to historic resources, if any would occur during either construction or demolition, will be identified after staff has reviewed the report on historical resources that will be provided by the applicant at the end of May 2001. Results of the analysis of this document will be provided in the FSA.

CUMULATIVE IMPACTS

The City of Morro Bay is an area with potential for discovery of archaeological resources. There are 16 projects proposed within 1 mile of the MBPP (Duke 2000a, p. 6.1-4). Whether projects are major or small commercial/residential facilities, they will cause ground disturbance which will threaten previously identified sites and undiscovered resources. Irreplaceable cultural resources were destroyed as a result of the activities that occurred in the building of the naval station that was previously located at the project site. Additional resources were destroyed during construction of the existing plant and other local development.

Given the expected modern development throughout this region, any cultural resource materials or undisturbed sites found in the project area can provide valuable information on environmental conditions and human adaptations to earlier, environmental conditions. Proposed developments reaching along the coast and into the coast range accelerate the potential for loss of significant cultural resource information. The level of cumulative impact increases as development opens more undisturbed areas and exposes highly sensitive cultural resource sites. If mitigation measures such as avoidance, recordation, or data recovery are conducted for all of the project components, the potential cumulative impacts will be mitigated below a level of significance.

The possibility of cumulative impacts to historical resources will be discussed in the FSA.

FACILITY CLOSURE IMPACTS

PLANNED CLOSURE

The anticipated lifetime of the project is expected to be in excess of thirty years. The life of the combined cycle units is expected to be thirty, but good maintenance and equipment replacement may extend their usefulness (Duke 2000a, p. 4.3). At the time of closure, all then-applicable LORS and local/regional plans will be identified and the closure plan will address compliance with those LORS and plans. Generally, if no additional ground disturbance occurs during closure activities and all conditions of certification have been met, no impacts to cultural resources would be expected. However, actual potential impacts are more likely to depend upon the final location of project structures in relation to existing resources, upon the procedures used for the removal of project structures. Since the spatial relationship between the closure and removal of project structures and sensitive resources cannot be determined at this time, no final conclusion can be drawn with respect to the impact of permanent facility closure on cultural resources. However, if closure plans are submitted and approved through the Energy Commission process, and there is compliance with all conditions of certification and LORS, there will be no impacts to cultural resources.

UNEXPECTED TEMPORARY CLOSURE

A temporary unplanned closure would be likely to occur in response to an emergency. No impacts to cultural resources are expected from an unexpected temporary closure.

UNEXPECTED PERMANENT CLOSURE

If a site were abandoned, impacts to cultural resources would be unlikely because there would be no immediate soil disturbances. Over time, depending on possible soil disturbance, some impacts on cultural resources might result.

MITIGATION

The preferred method of mitigation is avoidance of areas during construction where cultural resource locations have previously been identified. However, avoidance is not always possible. At times, other mitigation methods including, but not limited to, surface collection, subsurface testing, and data recovery must be implemented. Mitigation measures are developed to reduce both adverse project impacts and the potential for adverse project impacts on cultural resources to a less than significant level.

APPLICANT'S PROPOSED MITIGATION

Although the applicant contends that no direct impact to resources is expected, they offer a list of proposed measures that would assure that no potential subsurface cultural resources would be adversely affected (Duke 2000a, p. 6.7-13). The applicant would verify any suspected existence of cultural resources and would mitigate potential impacts through data recovery, if necessary. The applicant also plans to have a professional archaeologist and Native American monitor present if project activities have a potential to impact cultural resources.

The applicant has proposed sensitivity training regarding cultural resources and would direct crews to avoid areas where cultural resources have previously been identified. Temporary fencing would be used to protect existing cultural resources and work crews would be cautioned to avoid areas where cultural resources may be present. The applicant also proposes a conservation easement that would protect known cultural resources on the MBPP site (Duke 2000a p. 6.7-13 & 14).

In an effort to mitigate impacts and potential impacts to cultural resources of Native American origin, the applicant has entered into a MOA with the SLOCCC for consultation and monitoring.

STAFF'S PROPOSED MITIGATION MEASURES

Staff concurs with many of the mitigation measures proposed by the applicant for the discovery of archeological deposits. Staff, in its proposed conditions of certification, has included additional language to clarify and ensure the success of the measures presented by the applicant. The conditions would ensure that appropriate mitigation measures are implemented if previously unknown cultural resources are encountered during pre-construction site preparation or during project construction.

The proposed mitigation measures are derived from good professional practice and are based on the U.S. Secretary of Interior guidelines, and the Commission staff experience. All of these mitigation measures have previously proven successful in protecting sensitive cultural resources from construction-related impacts, while allowing the timely completion of many projects throughout California. In addition the recommendation have incorporated policies of the City of Morro Bay. Proper implementation of these measures would lower any potential impacts to cultural resources below the threshold of significance.

Staff applauds Duke's efforts to be responsive to Native American concerns regarding the discovery of human remains or artifacts of Native American origin. However, the level of concern among representatives of the Native American community regarding the archaeologically sensitive area in the vicinity of the project suggests that additional mitigation efforts are necessary.

MBPP is located an "disputed area" as defined by the NAHC. Several different Native American groups from the area have expressed a desire to provide Duke with information. The representatives of the Native American community have expressed concern regarding previously identified archaeological sites, traditional cultural use areas, and artifacts that might be discovered and the appropriate treatment of human remains, from their particular cultural perspective. Staff recommends additional Native American participation in the MBPP project to mitigate impacts to an area that appears culturally significant to several Native American groups in the project area.

The area of greatest concern to all the Native American groups is the disposition of human remains. Based on reports in the confidential filing, earth-moving activities at the project site in 1961 disturbed a minimum of 48 burials (Duke 2000a1, Appendix p.1). There are reports from other sources provided in the confidential technical report that humans remains have been encountered in other areas of the proposed project site (Duke 2000a1, Appendix p. 1). Additionally, there have been local anecdotal accounts of the presence of human remains at the project site. In the event human remains are encountered Health and Safety Code, Section7050.5 et seq. Public Resources Code, Section 5097.98 and Public Resources Code, Section 15064.5 (e), provide direction regarding procedures to be followed.

In keeping with NAHC policies, staff also recommends that archaeological and Native American consultation and monitoring occur at both the proposed and existing project, prior to and during ground disturbance. Areas to be monitored during ground disturbance should include any areas of ground disturbance outside the bermed areas, including but not limited to access roads, landscaping, bicycle trail and bridge construction, and existing plant demolition.

Duke should plan at least one meeting a month to consult with all concerned Native Americans regarding activities at the plant. Consultation and monitoring activities should be evenly distributed between concerned groups so that representatives of all groups, with concerns, have an opportunity to participate. Duke should also

allow for participation of concerned Native Americans throughout the lab and analysis phases of data recovery and curation phase of the project.

Staff recommends that Duke prepare a plan with provisions for including representatives of each group in monitoring activities during ground surface preparation and construction and in areas where ground disturbance may occur during demolition. The plan shall also provide provisions for including concerned Native Americans in the laboratory and curation phases of data recovery.

Additional mitigation may be recommended if it appears that there may be impacts to historic resources. That information, if necessary, will be included in the FSA.

COMPLIANCE WITH APPLICABLE LORS

Staff's proposed conditions of certification would ensure compliance with applicable LORS.

CONCLUSIONS AND RECOMMENDATIONS

CONCLUSIONS

The proposed project has the potential to adversely affect cultural resources. There is still information that will be addressed in the FSA. Staff needs to confer with biology staff to determine if any impacts to the plant Silene spp. or the peregrine falcon are likely to occur. Staff expects additional information from Duke on historical resources and an archaeological report. Staff is also waiting for a copy of a letter that includes Mary Trejo's assertion that Morro Rock is a Chumash traditional cultural use area. Representatives of the Santa Ynez Reservation may also choose to comment on the project. At this time staff can not draw conclusions regarding recognized or potential impacts.

RECOMMENDATIONS

Staff recommends that the Commission adopt the following proposed conditions of certification, which incorporate the mitigation measures discussed above.

PROPOSED CONDITIONS OF CERTIFICATION

CUL-1 Prior to the start of ground disturbance, the project owner shall provide the California Energy Commission (Commission) Compliance Project Manager (CPM) with the name and statement of qualifications for its Cultural Resources Specialist (CRS), and one alternate CRS, if an alternate is proposed, who will be responsible for implementation of all cultural resources Conditions of Certification.

Protocol: The statement of qualifications for the CRS and alternate shall include all information needed to demonstrate that the CRS meets the minimum qualifications specified in the U.S. Secretary of Interior Guidelines,

as published by the State Office of Historic Preservation (1983). The minimum qualifications include the following:

1) a graduate degree in anthropology, archaeology, California history, cultural resource management, or a comparable field;
2) at least three years of archaeological resource mitigation and field experience in California; and
3) at least one year's experience in each of the following areas:
    a) leading archaeological resource field surveys;
    b) leading site and artifact mapping, recording, and recovery operations;
    c) marshalling and use of equipment necessary for cultural resource recovery and testing;
    d) preparing recovered materials for analysis and identification;
    e) determining the need for appropriate sampling and/or testing in the field and in the lab;
    f) directing the analyses of mapped and recovered artifacts;
    g) completing the identification and inventory of recovered cultural resource materials; and
    h) preparing appropriate reports to be filed with the receiving curation repository, the State Historic Preservation Office, all appropriate regional archaeological information center(s).

The statement of qualifications for the CRS shall include:

1) a list of specific projects the CRS has previously worked on;
2) the role and responsibilities of the CRS for each project listed; and
3) the names and phone numbers of contacts familiar with the CRS's work on these referenced projects.

Verification: At least ninety days prior to the start of ground disturbance, the project owner shall submit the name and statement of qualifications of its CRS and alternate CRS, if an alternate is proposed, to the CPM for review and approval.

At least ten days, prior to the start of construction, the project owner shall confirm in writing to the CPM that the approved CRS will be available at the start of construction and is prepared to implement the cultural resources Conditions of Certification.

At least ten days prior to the termination or release of the CRS, the project owner shall obtain CPM approval of the replacement CRS by submitting to the CPM the name and resume of the proposed new CRS.

CUL-2 Prior to the start of ground disturbance, the project owner shall provide the CRS and the CPM with maps and drawings showing the footprint of the power plant and all linear facilities. Maps provided will include the USGS 7.5 minute topographic quadrangle map and a map at an appropriate scale (e.g., 1:2000 or 1" = 200') for plotting individual artifacts. In addition, the project owner shall provide a set of these maps to the CPM at the same time that they are provided to the CRS. If the footprint of the power plant or linear facilities changes, the project owner shall provide maps and drawings reflecting these changes, to the CRS and the CPM. Maps shall show the location of all areas where surface disturbance may be associated with access roads, and any other project components.

Verification: At least seventy-five days prior to the start of ground disturbance, the project owner shall provide the CRS and the CPM with maps and drawings. Copies of maps and drawings reflecting changes to the footprint of the power plant and/or project components shall be submitted to the CRS and CPM within five days of the changes.

CUL-3 Prior to the start of ground disturbance, the CRS shall prepare, and the project owner shall submit to the CPM for review and approval, a Cultural Resources Monitoring and Mitigation Plan (CRMMP), identifying general and specific measures to minimize potential impacts to sensitive cultural resources.

The CRMMP shall include, but not be limited to, the following elements and measures:

(a) A proposed research design that includes a discussion of questions that may be answered by the mapping, data and artifact recovery conducted during monitoring and mitigation activities, and by the post-construction analysis of recovered data and materials.

(b) A discussion of the implementation sequence and the estimated time frames needed to accomplish all project-related tasks during the pre-construction, construction, and post-construction analysis phases of the project.

(c) Identification of the person(s) expected to perform each of the tasks and description of the mitigation team organizational structure and the inter-relationship of team roles and responsibilities. Specification of the qualifications of any professional team members.

(d) A discussion of the participation by Native American consultants, observers or monitors, the procedures to be used to select them, the areas where they will be needed, and their role and responsibilities.

(e) A discussion of measures such as flagging or fencing, to prohibit or otherwise restrict access to sensitive resource areas that are to be avoided during construction and/or operation, and identification of areas where these measures are to be implemented. The discussion shall address how these measures will be implemented prior to the start of

construction and how long they will be needed to protect the resources from project-related effects.

(f) Identification of areas of ground disturbance where monitoring is deemed necessary by the CRS. The CRS will determine the size or extent of the areas where monitoring is to occur and will establish the percentage of the time that the monitor(s) will be present. The areas to be monitored shall include the power plant site and the areas where grading and/or excavation will be required.

(g) A discussion of the requirement that all cultural resources encountered will be recorded and mapped (may include photos) and all significant or diagnostic resources will be collected for analysis and eventual curation into a retrievable storage collection in a public repository or museum that meets the California State Historic Resources Commission Guidelines on Curation Facilities of cultural resources.

(h) A discussion of the availability and the CRS' access to equipment and supplies necessary for site mapping, photographing, and recovering any cultural resource materials encountered during construction.

(i) Identification of the public institution that has agreed to receive any data and cultural resources recovered during project-related monitoring and mitigation work. Discussion of any requirements, specifications, or funding needed for the materials to be delivered for curation and how they will be met. Also include the name and phone number of the contact person at the institution.

Verification: At least sixty days prior to the start of ground disturbance activities, the project owner shall provide the CRMMP, prepared by the CRS, to the CPM for review and approval.

CUL-4 Prior to the start of ground disturbance, the CRS shall prepare an employee training program. The project owner shall submit the cultural resources training program to the CPM for review and approval.

The training plan and all program components will be submitted to the CPM. The drafts of the training plan and the program components will be reviewed and approved. The training program shall discuss the potential to encounter cultural resources in the field, the sensitivity and importance of these resources, and the legal obligations to preserve and protect such resources.

The training shall include a lecture and/or video that will address the following topics: (1) applicable state and federal laws pertaining to cultural resources; (2) cultural materials that, upon discovery, will require notification of the construction supervisor, cultural resources monitor, and./or CRS; and (3) authority of the CRS, alternate CRS, or Cultural Resources Monitor(s) to halt or redirect construction activities that have the potential to affect cultural resources. The training program shall also include the set of resource reporting procedures and work curtailment procedures that workers are to follow if previously unknown cultural resources are encountered during project activities. The training program shall include the statement that the

CRS, alternate CRS or cultural resources monitor has the authority to halt construction in the event of an unanticipated discovery. The employees shall be given a small durable Environmental Awareness Training Manual that includes all of the legal and procedural information necessary to fulfil the Conditions of Certification and contact names of the CRS and alternate CRS.

A form shall be developed as part of the cultural resources awareness program for the workers to sign that certifies (1) their completion of the environmental awareness training program, (2) their understanding of their responsibilities under the program, and (3) their comprehension of potential legal penalties that could be sought against them individually should they violate applicable laws.

The training program may be combined with other training programs prepared for biological resources, paleontological resources, hazardous materials, or any other areas of interest or concern.

Verification: At least sixty days prior to the start of ground disturbance, the project owner shall submit to the CPM for review and approval, the proposed employee training plan and its components (e.g. the script of the proposed video if one is proposed). The project owner shall also provide resume(s) for individual(s) other than the CRS proposed to perform the training.

CUL-5 Prior to the start of ground disturbance and throughout the project construction period as needed for all new employees, the project owner shall ensure that the CRS or qualified individual(s) approved by the CPM provide the CPM-approved cultural resources training in-person to all project managers, construction supervisors, and workers. The project owner shall ensure that the designated trainer provides the workers with the CPM-approved set of procedures for reporting any sensitive resources that may be discovered during ground disturbance and the work curtailment procedures that the workers are to follow if previously unknown cultural resources are encountered during construction.

Training at the project site may be discontinued after all ground disturbance at the site has concluded and the CRS has inspected the site and determined that no cultural resources will be impacted. Training shall continue for project personnel working in the vicinity of other project components that will disturb native soils, including landscaping.

Verification: In each Monthly Compliance Report (MCR) after the start of construction, the project owner shall provide the CPM with documentation that the designated cultural resources trainer(s) has/have provided the CPM-approved cultural resources training and the set of reporting and work curtailment procedures to all workers.

After completion of all ground disturbance at the project site, if the project owner wishes to discontinue training at the project site, the project owner shall provide a letter to the CPM indicating that the CRS has inspected the project site and has determined that no cultural resources will be impacted by completion of the project.

CUL-6 The CRS, alternate CRS and the Cultural Resources Monitor(s) shall have the authority to halt or redirect construction if previously unknown cultural resource sites or materials are encountered or if known resources may be impacted in a previously unanticipated manner.

If such resources are found, the halting or redirection of construction shall remain in effect until all of the following have occurred:

(a) the CRS has notified the CPM and the project owner of the find and the work stoppage;

(b) the CRS, the project owner, and the CPM have conferred and determined what, if any, data recovery or other mitigation is needed; and

(c) any necessary data recovery and mitigation has been completed.

If data recovery or other mitigation measures are required, the CRS and/or the alternate CRS and cultural resource monitor(s), including Native American monitor(s), shall monitor these data recovery and mitigation measures, as needed.

For any cultural resource encountered, the project owner shall notify the CPM within 24 hours after the find.

All required data recovery and mitigation shall be completed expeditiously unless all parties agree to additional time.

Verification: Thirty days prior to the start of ground disturbance, the project owner shall provide the CPM with a letter confirming that the CRS, alternate CRS and Cultural Resources Monitor(s) have the authority to halt construction activities in the vicinity of a cultural resource find and stating that the CRS will notify the CPM and project owner within 24 hours after a find.

CUL-7 Throughout the project site preparation and construction period, the project owner shall provide the CRS and the CPM with a current schedule of anticipated monthly project activity (presented on a week-by-week basis) The CRS shall consult daily with the project superintendent or construction field manager to confirm the area(s) to be worked on the next day(s). The CRS may informally discuss the cultural resources monitoring and mitigation activities with Commission technical staff.

Verification: The project owner shall provide the CRS and the CPM with a week-by-week schedule of the upcoming construction activities, one month in advance. These advance schedules are to be provided to the CPM with the MCR.

CUL-8 The CRS shall monitor ground disturbance during construction and demolition in the vicinity of CA-SLO-16 and CA-SLO-239 to ensure there are no impacts to the sites. Monitoring shall also occur during all ground disturbance at the project site, including utility lines and access roads, the area of the sound wall and the Morro Creek foot bridge. In addition to the

areas where CRS monitoring is required, the CRS, alternate CRS or CRS monitor(s) shall be present at times the CRS deems appropriate, during the construction and demolition phases of the project to monitor ground disturbance, during project construction, and at any other locations specified in the approved monitoring and mitigation plan.

Verification: During the construction and demolition phases of the project, and throughout the periods of ground disturbance, the project owner shall include in the MCR to the CPM copies of the weekly summary reports prepared by the CRS regarding project-related cultural resources monitoring.

CUL-9 Throughout the pre-construction reconnaissance surveys and the construction monitoring and mitigation phases of the project, the CRS shall keep a daily log of any resource finds and the progress or status of the resource monitoring, mitigation, preparation, identification, and analytical work being conducted for the project. The daily logs shall indicate, where and when monitoring has taken place, where monitoring has been deemed unnecessary, and where cultural resources were found.

The CRS shall prepare a weekly summary report on the progress or status of cultural resources-related activities.

The CRS may informally discuss the cultural resources monitoring and mitigation activities with Commission technical staff.

Verification: Throughout the project pre-construction and construction period, the project owner shall ensure that the daily log is available for periodic audit by the CPM. The weekly summary reports shall be included in the MCR.

CUL-10 The project owner shall ensure that the CRS performs the recovery, preparation for analysis, analysis, preparation for curation, and delivery for curation of all cultural resource materials encountered and collected during the monitoring, data recovery, mapping, and mitigation activities related to the project. If artifacts are discovered, concerned Native Americans shall be included as consultants/monitors in all phases of data recovery, lab work, and plans for curation.

Verification: The project owner shall maintain in its compliance files, copies of signed contracts or agreements with the museum(s), university(ies), or other appropriate research CRSs involved in curation. The project owner shall maintain these files for the life of the project and the files shall be kept available for periodic audit by the CPM. Information as to the specific location of sensitive cultural resource sites shall be kept confidential and accessible only to qualified cultural resources specialists.

CUL-11 After completion of the project, the project owner shall ensure that the CRS prepares a Cultural Resource Report (CRR) according to Archaeological Resource Management Reports (ARMR) Guidelines as recommended by the California Office of Historic Preservation. The project

owner shall submit the report to the CPM for review and approval. The report shall be considered final upon approval by the CPM.

Protocol: The CRR shall include (but not be limited to) the following:

a. For all projects:

   1) description of pre-project literature search, surveys, and any testing activities;

   2) maps showing areas surveyed or tested;

   3) description of any monitoring activities;

   4) maps of any areas monitored; and

   5) conclusions and recommendations.

b. For projects in which cultural resources were encountered, include the items specified under "a" and also provide:

   1) site and isolated artifact records and maps;

   2) description of testing for, and determinations of, significance and potential eligibility; and

   3) research questions answered or raised by the data from the project.

c. For projects regarding which cultural resources were recovered, include the items specified under "a" and "b" and also provide:

Protocol: descriptions (including drawings and/or photos) of recovered cultural materials;

   1) results and findings of any special analyses conducted on recovered cultural resource materials;

   2) an inventory list of recovered cultural resource materials; and

   3) the name and location of the public repository receiving the recovered cultural resources for curation.

Verification: After completion of the project, project owner shall ensure that the CRS completes the CRR within ninety days following completion of the analysis of the recovered cultural materials. Within seven days after completion of the report, the project owner shall submit the CRR to the CPM for review and approval.

CUL-12 After completion of the CRR, the project owner shall submit an original, an original-quality copy, or a computer disc copy of the CPM-approved CRR to the public repository to receive the recovered data and materials for curation, to the SHPO, and to the appropriate regional California Historical Resources Information System information center (CHRIS). If the report is submitted to any of these entities on a computer disc, the disc files must meet SHPO requirements for format and content.

Protocol: The copies of the CRR to be sent to the curating repository, the SHPO, and the regional CHRIS shall include the following (based on the applicable scenario (a, b, or c) set forth in the previous condition):

a. originals or original-quality copies of all text;

b. originals of any topographic maps showing site and resource locations;

c. originals or original-quality copies of drawings of significant or diagnostic cultural resource materials found during pre-construction surveys or during project-related monitoring, data recovery, or mitigation; and

d. photographs of the site(s) and the various cultural resource materials recovered during project monitoring and mitigation and subjected to post-recovery analysis and evaluation. The project owner shall provide the curating repository with a set of negatives for all of the photographs.

Verification: Within thirty days after receiving approval of the CRR, the project owner shall provide to the CPM documentation that the report has been sent to the public repository receiving the recovered data and materials for curation, the SHPO, and the appropriate CHRIS.

For the life of the project the project owner shall maintain in its compliance files copies of all documentation related to the filing of the CRR with the following:

a) the public repository receiving the recovered data and materials for curation,

b) the SHPO, and

c) the appropriate CHRIS.

CUL-13 Following the filing of the CPM-approved CRR with the appropriate entities, the project owner shall ensure that all cultural resource materials, maps and data collected during data recovery and mitigation for the project are delivered to a public repository that meets the U.S. Secretary of Interior's requirements for the curation of cultural resources. The project owner shall pay any fees for curation required by the repository.

Verification: The project owner shall ensure that all recovered cultural resource materials are delivered for curation within thirty days after providing the CPM-approved CRR to the public repository and other entities receiving the recovered data and materials.

For the life of the project the project owner shall maintain in its project history or compliance files, copies of signed contracts or agreements with the public repository to which the project owner has delivered for curation all cultural resource materials collected during data recovery and mitigation for the project.

CUL-14 Prior to any ground disturbance, the project owner shall develop a plan for consultation with concerned Native American groups in the Morro Bay area. The plan shall include arrangements for hearing and addressing the concerns of each group regarding artifacts that may be discovered. The plan shall also include provisions for monitoring by each group on an evenly divided basis. The plan shall also explain what methods will be used to

involve Native American groups in the laboratory analysis phase of data recovery and incorporate each Native American group's concerns into an agreement with a curation facility.

Verification: Prior to project construction related ground disturbance at the project site, the project owner shall provide a copy of the consultation plan to the CPM for review and approval.

REFERENCES

City (City of Morro Bay Coastal Land Use Plan) 1981. Chapter VI

City (City of Morro Bay General Plan) 1888 Chapter II, Land Use, Open Space and and Conservation Elements.

Duke (Duke energy Morro Bay LLC) 2000a. Application for Certification, Volumes 1a-1b, III-IV, Morro Bay Power Plant Project (00-AFC-12). Submitted to the California Energy Commission on October 23, 2000.

Duke (Duke energy Morro Bay LLC) 2000a1 Confidential Technical Report. Submitted to the California Energy Commission on October 23, 2000

Duke (Duke Energy Morro Bay LLC) 2000j. Data Adequacy Responses to the CEC Comments on the Morro Bay Power Plant AFC, dated and submitted to the California Energy Commission on December 8, 2000.

Duke (Duke Energy Morro Bay LLC) 2001a. Response to CEC 2/9/01 Data Requests (First set of responses to CEC data Request Set 1), dated and submitted to California Energy Commission on March 9, 2001.

Duke (Duke Energy Morro Bay LLC) 2001a1. Response to CEC data requests 2/9/01. Confidential Filing) Submitted to the California Energy Commission on March 9, 20001.

Duke (Duke energy Morro bay LLC) 2001b. Responses to CEC 2/9/01 Data Requests (Second set of responses to CEC data request Set 1), dated and submitted to California Energy Commission on April 11, 2001.

Duke (Duke energy Morro Bay LLC) 2001b1. Responses to CEC request. Confidential filing). Submitted to the Californai Energy Commission on April 11, 2001.

Moratto, Michael J. California Archaeology. 1984. Academic Press. Orlando

PSHS (Playano Salinian Heritage Services) 2000a1. Letter from PSHS/Dunton to CEC/Lewis RE Review and Comments on Cultural Resources Section (of AFC). Included confidential filing. Submitted to the California Energy Commission on December 13, 2000.

NAHC (Wood, Rob. Native American Heritage Commission, Associate Governmental Program Analyst). 2001. NAHC comments on the MBPP Project. Submitted to California Energy Commission, March 26, 2001.

NAHC (Wood, Rob. Native American Heritage Commission, Associate Governmental Program Analyst). 2001a. Personal Conversation with Dorothy Torres, Energy Commission staff, April 2, 2001

HAZARDOUS MATERIALS MANAGEMENT

Alvin J. Greenberg, Ph.D. and Rick Tyler

INTRODUCTION

The purpose of this Preliminary Staff Analysis is to determine if the proposed Morro Bay Power Plant Project (MBPP Project, 00-AFC-12) has the potential to cause significant impact on the public as a result of the use, handling or storage of hazardous materials at the proposed facility. If significant adverse impacts on the public are identified, Energy Commission staff must also evaluate the potential for facility design alternatives and additional mitigation measures to reduce impacts to the extent feasible.

This analysis does not address potential exposure of workers to hazardous materials used at the proposed facility. Staff's **Worker Safety and Fire Protection** analysis describes the requirements applicable to the protection of workers from such risks.

The only hazardous material stored at the Morro Bay Power Plant Project in quantities exceeding the reportable amounts defined in the California Health and Safety Code, section 25532 (j), is aqueous ammonia (29 percent ammonia in aqueous solution; see Table 6.15-5 of the Application for Certification [Duke 2000a, AFC]). The use of aqueous ammonia significantly reduces the risk that would otherwise be associated with use of the more economical anhydrous form of ammonia. Use of the aqueous form eliminates the high internal energy associated with the more hazardous anhydrous form, which is stored as a liquefied gas at elevated pressure. The high internal energy associated with the anhydrous form of ammonia can act as a driving force in an accidental release which can rapidly introduce large quantities of the material to the ambient air and result in high down-wind concentrations. Spills associated with the aqueous form are much easier to contain and emissions are limited by the slow mass transfer from the surface of the spilled material.

The project will also use an aqueous mixture of hydrazine as a feedwater oxygen scavenger. This material may pose risks if not handled properly and was therefore the subject of further staff analysis.

Other hazardous materials stored in smaller quantities, such as mineral and lubricating oils, corrosion inhibitors and water conditioners, will be present at the proposed facility. However, these materials pose no significant potential for off-site impacts as a result of the quantities on-site, their relative toxicity, and/or their environmental mobility. Although no natural gas is stored, the project will also involve the construction and operation of a natural gas pipeline and handling of large amounts of natural gas. Natural gas poses some risk of both fire and explosion, however, the gas line will not be lengthy and will be attached to an existing on-site main. Thus, off-site gas pipeline construction will not be required and the on-site pipeline design is addressed in staff's **Facility Design** analysis.

The Morro Bay Power Plant Project will also require the transportation of aqueous ammonia to the facility. Analysis of the potential for impact associated with such deliveries was not completed due to outstanding responses to staff's data requests.

LAWS, ORDINANCES, REGULATIONS, STANDARDS AND POLICIES

The following federal, state, and local laws and policies apply to the protection of public health and hazardous materials management. Staff's analysis examines the project's compliance with these requirements.

FEDERAL

The Superfund Amendments and Reauthorization Act of 1986 (Pub. L. 99-499, §301,100 Stat. 1614 [1986]), also known as SARA Title III, contains the Emergency Planning and Community Right To Know Act (EPCRA) as codified in 42 U.S.C. §11001 et seq. This Act requires that certain information about any release to the air, soil, or water of an extremely hazardous material must be reported to state and local agencies.

The Clean Air Act (CAA) of 1990 (42 U.S.C. §7401 et seq. as amended) established a nationwide emergency planning and response program and imposed reporting requirements for businesses which store, handle, or produce significant quantities of extremely hazardous materials. The CAA section on Risk Management Plans - codified in 42 U.S.C. §112(r) - requires the states to implement a comprehensive system to inform local agencies and the public when a significant quantity of such materials is stored or handled at a facility. The requirements of the CAA are reflected in the California Health and Safety Code, section 25531 et seq.

Currently, due to the high volume of petroleum-containing hazardous materials already in place on this site, the applicant is required to have a Spill Prevention Control and Countermeasure Plan (SPCC) in place (Hazardous Waste Contingency Plan Title 40 C.F.R., Part 112.7).

STATE

The California Accidental Release Prevention Program (Cal-ARP) - Health and Safety Code, section 25531 - directs facility owners storing or handling acutely hazardous materials in reportable quantities, to develop a Risk Management Plan (RMP) and submit it to appropriate local authorities, the United States Environmental Protection Agency (EPA), and the designated local Administering Agency for review and approval. The plan must include an evaluation of the potential impacts associated with an accidental release, the likelihood of an accidental release occurring, the magnitude of potential human exposure, any preexisting evaluations or studies of the material, the likelihood of the substance being handled in the manner indicated, and the accident history of the material. This new, recently developed program supersedes the California Risk Management and Prevention Plan (RMPP).

Section 25503.5 of the California Health and Safety Code requires facilities which store or use hazardous materials to prepare and file a Business Plan with the local

Certified Unified Program Authority (CUPA), in this case the San Luis Obispo County Health Department, Division of Environmental Health. This Business Plan is required to contain information on the business activity, the owner, a hazardous materials inventory, facility maps, an Emergency Response Contingency Plan, an Employee Training Plan, and other recordkeeping forms.

Title 8, California Code of Regulations, section 5189, requires facility owners to develop and implement effective safety management plans to ensure that large quantities of hazardous materials are handled safely. While such requirements primarily provide for the protection of workers, they also indirectly improve public safety and are coordinated with the RMP process.

Title 8, California Code of Regulations, section 458 and sections 500 – 515, set forth requirements for design, construction and operation of vessels and equipment used to store and transfer anhydrous ammonia. These sections generally codify the requirements of several industry codes, including the ASME Pressure Vessel Code, ANSI K61.1 and the National Boiler and Pressure Vessel Inspection Code. While these codes apply to anhydrous ammonia, they may also be used to design storage facilities for aqueous ammonia.

California Health and Safety Code, section 41700, requires that "No person shall discharge from any source whatsoever such quantities of air contaminants or other material which causes injury, detriment, nuisance, or annoyance to any considerable number of persons or to the public, or which endanger the comfort, repose, health, or safety of any such persons or the public, or which cause, or have a natural tendency to cause injury or damage to business or property."

GAS PIPELINE

The safety requirements for pipeline construction vary according to the population density and land use, which characterize the surrounding land. The pipeline classes are defined as follows (Title 49, Code of Federal Regulations, Part 192):

- Class 1: Pipelines in locations with ten or fewer buildings intended for human occupancy.
- Class 2: Pipelines in locations with more than ten but fewer than 46 buildings intended for human occupancy. This class also includes drainage ditches of public roads and railroad crossings.
- Class 3: Pipelines in locations with more than 46 buildings intended for human occupancy, or where the pipeline is within 100 yards of any building or small well-defined outside area occupied by 20 or more people on at least 5 days a week for 10 weeks in any 12 month period (The days and weeks need not be consecutive).

The natural gas pipeline will be designed for Class 3 service and will meet California Public Utilities Commission General Order 112-D and 58-A standards as well as various PG&E standards. The natural gas pipeline must be constructed and

operated in accordance with the Federal Department of Transportation (DOT) regulations, Title 49, Code of Federal Regulations (CFR), Parts 190, 191, and 192:

- Title 49, Code of Federal Regulations, Part 190 outlines the pipeline safety program procedures;
- Title 49, Code of Federal Regulations, Part 191, Transportation of Natural and Other Gas by Pipeline; Annual Reports, Incident Reports, and Safety-Related Condition Reports, requires operators of pipeline systems to notify the U.S. Department of Transportation of any reportable incident by telephone and then submit a written report within 30 days;
- Title 49, Code of Federal Regulations, Part 192, Transportation of Natural and Other Gas by Pipeline: Minimum Federal Safety Standards, specifies minimum safety requirements for pipelines and includes material selection, design requirements, and corrosion protection. The safety requirements for pipeline construction vary according to the population density and land use which characterize the surrounding land. This part contains regulations governing pipeline construction, which must be, followed for Class 2 and Class 3 pipelines.

LOCAL AND REGIONAL

The Uniform Fire Code (UFC 1997) contains provisions regarding the storage and handling of hazardous materials in Articles 4 and 79. The most recent version of the UFC was in 1997. The City of Morro Bay adopted this version of the UFC into the municipal code in 1999.

The California Building Code contains requirements regarding the storage and handling of hazardous materials. The Chief Building Official must inspect and verify compliance with these requirements prior to issuance of an occupancy permit. A further discussion of these requirements is provided in the **Facility Design** portion of this document.

The City of Morro Bay Zoning Ordinance, Chapter 17.52, Section17.52.100 is administered by the Morro Bay Fire Department and contains a requirement that hazardous materials may not be stored or used within 100 feet of residences.

SETTING

On October 23, 2000 Duke Energy Morro Bay LLC filed an Application for Certification (00-AFC-12) seeking approval from the California Energy Commission (Energy Commission) to construct and operate the proposed 1,200-megawatt (MW) Morro Bay Power Plant Project (MBPP Project). The “modernization” Project is proposed to be located at the existing 1,030 MW Morro Bay Power Plant site that is owned and operated by Duke Energy. This site is located within the City of Morro Bay, San Luis Obispo County, near Morro Bay Harbor, bordered on the west by Embarcadero Road and on the east by Highway 1.

The new units will replace four currently operating generation units with two state-of-the-art 600 MW combined cycle units. Each new unit will be capable of

producing 600 MW, so that upon completion, the Plant will be capable of producing a total of 1,200 MW. Each new unit will consist of two gas-fired turbines and one steam turbine driven by the heat produced by the other two turbines. Each new unit will have two, 145-foot tall stacks compared with the existing plant's three 450-foot tall stacks.

Natural gas will be delivered from Pacific Gas and Electric Company's Kettleman Compressor Station through PG&E pipeline 306. Natural gas originates from the south with El Paso Natural Gas in Arizona and from the north with PG&E/Northwest in Oregon.

The Project will include demolition of the on site fuel oil tank farm, all existing power plant equipment (boiler – steam turbine complex), and removal of three 450 feet tall exhaust stacks (Duke 2000a). Stage one consists of the demolition of the tank farm in three months and will be completed in 2002. Stage two includes the demolition of the three 450 foot stacks and will begin after commercial operation of the new units commences. This stage will be completed in 2004. Stage three involves the dismantling of the existing generation units by the end of 2007.

Several factors associated with the area in which a project is to be located affect its potential to cause public health impacts from an accidental release of a hazardous material. These include:

- local meteorology;
- terrain characteristics; and
- location of population centers and sensitive receptors relative to the project.

METEOROLOGICAL CONDITIONS

Meteorological conditions, including wind speed, wind direction and air temperature, affect the extent to which accidentally released hazardous materials would be dispersed into the air and the direction in which they would be transported. This affects the level of public exposure to such materials and the associated health risks. When wind speeds are low and stable, dispersion is severely reduced and can lead to increased localized public exposure.

Recorded wind speeds and ambient air temperatures are described in the air quality section of the AFC (section 6.2.2). This data indicates that wind speeds below one meter per second and temperatures exceeding 80°F occur in the project area, albeit rarely owing to the temperate nature of the central California Coast microclimate. Therefore, staff agrees with the applicant that use of F stability (stagnated air, very little mixing), 1.5 meter/second wind speed, and an ambient temperature of 97° F in its modeling analysis of an accidental release of aqueous ammonia is an extremely conservative scenario and reflects worst case atmospheric conditions. Staff also believes that the Applicant's Alternative Scenario modeling input parameters involving accidental release from a tanker truck (see Table 6.15-6 of the AFC) presents a more reasonable scenario of the dispersion of an accidental release.

TERRAIN CHARACTERISTICS

The location of elevated terrain (terrain above the power plant stack height) is often an important factor to be considered in assessing potential exposure. An emission plume resulting from an accidental release may impact high elevations before impacting lower elevations. Modeling of an accidental release of aqueous ammonia at the proposed facility indicates that significant concentrations would be confined to the facility property and that off-site concentrations – even at elevated locations – would be so low as to pose no hazard to the public. The project site and immediate vicinity (within 1800 feet of the aqueous ammonia storage tanks) is mostly level terrain. The nearest elevated location (a hill on the north east corner of the site) is approximately 1800 feet from the facility to the west. However, because modeling results show impacts are insignificant at the fenceline, elevated terrain is not an important factor affecting the modeled results of accidental releases of aqueous ammonia at this site.

LOCATION OF EXPOSED POPULATIONS AND SENSITIVE RECEPTORS

The general population includes many sensitive subgroups that may be at greater risk from exposure to emitted pollutants. These sensitive subgroups include the very young, the elderly, and those with existing illnesses. In addition, the location of the population in the area surrounding a project site may have a large bearing on health risk. Table 86.15-1 and Figure 6.15-2 (Duke 2000a) lists and shows the locations of both populated areas and sensitive receptors in the project vicinity. The fenceline closest to the aqueous ammonia storage tank area is 250 feet to the south of the tanks. The nearest public receptors are located in the harbor area west of the site and the nearest residence is to the east on Dunn St. ~1210 feet NW of the aqueous ammonia storage tanks. The nearest school is located 2600 feet to the north and the nearest day care center 4400 feet distant.

ENVIRONMENTAL IMPACTS

Staff thoroughly reviewed and assessed the potential for the transportation, handling, and use of hazardous materials to impact the surrounding community. All chemicals and natural gas were evaluated.

METHODOLOGY

In order to assess the potential for released hazardous materials to travel off-site, and impact on the public, staff analyzed several aspects of the proposed use of these materials at the facility. Staff recognizes that some chemicals must be used that are toxic. Therefore, staff conducted its analysis by examining the need for hazardous materials, the choice of chemical to be used and its amount, the manner in which the applicant will use the chemical, the manner it will be transported to the facility and transferred to facility storage tanks, and the way the applicant chooses to store the material on-site. Staff reviewed the applicant's proposed engineering controls and administrative controls concerning hazardous materials usage. Engineering controls are those physical or mechanical systems (such as storage tanks or automatic shut-off valves) which can prevent a spill of hazardous material

from occurring or which can limit the spill to a small amount or confine it to a small area. Administrative controls are those rules and procedures that workers at the facility must follow that will help to prevent accidents or keep them small if they do occur. Both engineering and administrative controls can act as methods of prevention or as methods of response and minimization. In both cases, the goal is to prevent a spill from moving off-site and causing harm to people.

Staff conducted a thorough review and evaluation of the applicant's proposed use of hazardous materials as described by the applicant in the AFC (Section 8.12) and in data responses. Staff's assessment followed the five steps listed below:

- Step 1: Staff reviewed the chemicals and the amounts proposed for use as listed in Table 6.15-5 of the AFC and determined the need and appropriateness of their use. If less toxic materials are available, staff suggested their use instead.
- Step 2: Those chemicals, proposed for use in small amounts or whose physical state is such that there is virtually no chance that a spill would migrate off the site and impact the public, were removed from further assessment.
- Step 3: Measures proposed by the applicant to prevent spills were reviewed and evaluated. These included engineering controls such as automatic shut-off valves and different size transfer-hose couplings and administrative controls such as worker training and safety management programs.
- Step 4: Measures proposed by the applicant to respond to accidents were reviewed and evaluated. These measures also included engineering controls such as catchment basins and methods to keep vapors from spreading and administrative controls such as training emergency response crews.
- Step 5: Staff then analyzed the theoretical impacts on the public worst-case spill of hazardous materials even with the mitigation measures proposed by the Applicant. If the mitigation methods proposed by the applicant were found to be sufficient, no further mitigation would be required. If the proposed mitigation proposed by the Applicant were found to be insufficient to reduce the potential for adverse impacts to an insignificant level, staff would then propose additional prevention and response controls until the potential for causing harm to the public was reduced to an insignificant level. It is only at this point that staff can recommend that the facility be allowed to use hazardous materials.

PROJECT IMPACTS

As proposed, the facility will cause no significant risk of off-site impacts. Thus, the direct impacts of the project will not add to any existing accidental release risks.

SMALL QUANTITY HAZARDOUS MATERIALS

In conducting the analysis, staff determined in Steps 1 and 2 that some materials, although present at the proposed facility, pose a minimal potential for off-site impacts as they will be stored in a solid form or in smaller quantities or have very low toxicity. These hazardous materials were thus removed from further assessment. For example, small quantities of solvents, amines (for controlling boiler feedwater pH), and chemicals for controlling feedwater oxygen will be present

in small quantities. Staff has determined that the potential for impacts on the public are insignificant if the applicant uses those scale inhibitors and corrosion controllers that contain only the active ingredients on the list. See Appendix C for a list of chemicals that will be used at the power plant.

During the construction phase of the project, the only hazardous materials proposed for use include phosphate or nitrate cleaning solutions, cleaning solvents, antifreeze, and pesticides. Any impact of spills or other releases of these materials will be limited to the site due to the small quantities involved and thus no further analysis of construction phase activities appears warranted.

The proposed use of a small quantity of hydrogen gas (744 lbs.) poses a risk of explosion. However, the small quantity present and the results of previous modeling of the blast effects of a much larger (45,000 scf) hydrogen tank explosion for a similar power generating facility in California (Final Staff Assessment for the San Diego Gas and Electric Repowering Project, April 4, 1994) demonstrate that any blast effect will be confined to the site and not impact off-site. The Applicant indicates that the hydrogen cylinders will be stored in an area isolated from potential ignition sources.

After removing from consideration those chemicals that fit into Steps 1 and 2, staff continued with Steps 4 and 5 to review the only remaining hazardous materials: hydrazine (35% aqueous mixture), sodium hypochlorite, petroleum fuels, natural gas, and aqueous ammonia.

LARGE QUANTITY HAZARDOUS MATERIALS

According to the applicant (Duke, 2000a), more than 5372 gallons of an aqueous mixture of sodium hypochlorite will be stored at the cooling water intake structure. Sodium hypochlorite has a low potential to affect the off-site public because its vapor pressure is also low and the concentration of hypochlorite is low (12.5 percent). In fact, hypochlorite is used at many such facilities as a substitute for chlorine gas, which is much more toxic and much more likely to migrate off-site because it is a gas and is stored in concentrated form. Thus, the use of a water solution of sodium hypochlorite is much safer to use than the alternative chlorine gas. However, the intake structure is located off-site at the end of the commercial area along Embarcadero and the delivery tanker area is not bermed. The chances for accidental spills during transfer from delivery vehicles to the storage tanks should be reduced as much as possible. Thus, measures to prevent transfer spills are extremely important and will be required as an additional section within the required Safety Management Plan for delivery of aqueous sodium hypochlorite (see Condition of Certification HAZ-**3**).

Large quantities of petroleum-containing hazardous materials will be used on this site. Diesel fuel (28,162 gallons) is of very low volatility and impacts of spills are expected to remain on-site. A small amount of gasoline (5741 gallons) will also be stored on-site. A Spill Prevention Control and Countermeasure Plan (SPCC) is required by Federal Regulations (see LORS above) and has already been prepared

for the current petroleum-containing hazardous materials on-site (see AFC page 6.15-36). It will be modified to reflect new conditions.

NATURAL GAS

Natural gas poses a fire and/or explosion risk as a result of its flammability. Natural gas is composed of mostly methane but also contains ethane, propane, nitrogen, butane, isobutane and isopentane. It is colorless, odorless, and tasteless and is lighter than air. Natural gas can cause asphyxiation when methane is ninety percent in concentration. Methane is flammable when mixed in air at concentrations of 5 to 14 percent, which is also the detonation range. Natural gas, therefore, poses a risk of fire and/or explosions if a release were to occur. However, it should be noted that, due to its tendency to disperse rapidly (Lees 1983), natural gas is less likely to cause explosions than many other fuel gases, such as propane or liquefied petroleum gas. While natural gas will be used in significant quantities, it will not be stored on-site. The risk of a fire and/or explosion on-site can be reduced to insignificant levels through adherence to applicable codes and development and implementation of effective safety management practices. In particular, gas explosions can occur in the Heat Recovery Steam Generator (HRSG) and during start-up. The National Fire Protection Association (NFPA 85A) requires 1) the use of double block and bleed valves for gas shut-off; 2) automated combustion controls; and 3) burner management systems. These measures will significantly reduce the likelihood of an explosion in gas-fired equipment. Additionally, start-up procedures will require air purging of the gas turbines prior to start-up, thus precluding the presence of an explosive mixture. The safety management plan proposed by the applicant will address the handling and use of natural gas and significantly reduce the potential for equipment failure due to improper maintenance or human error. Since the proposed facility will not require the installation of any new gas pipelines off-site, impacts from a break in the pipeline are limited to the existing pipelines already in use in the area or in the new pipeline to be installed on-site. The design of the natural gas pipeline is governed by laws and regulations discussed in staff's **Facility Design** analysis. Thus, the only new gas pipelines installed for the proposed project will be placed on-site where the risk of natural gas accidents can be better controlled and minimized. Therefore, the use of natural gas at the proposed facility will not result in adverse off-site impacts.

AQUEOUS AMMONIA

Aqueous ammonia will be used in controlling the emission of oxides of nitrogen (NO_x) from the combustion of natural gas in the facility. The accidental release of aqueous ammonia without proper mitigation can result in hazardous down-wind concentrations of ammonia gas. Two 30,000 gallon tanks will be used to store the 29.4 percent aqueous ammonia.

Based on the screening analysis discussed above, aqueous ammonia is one of the hazardous materials that may pose a risk of off-site impacts. The use of aqueous ammonia can result in the formation and release of toxic gases in the event of a spill even without interaction with other chemicals. This is a result of its relatively high vapor pressure and the large amounts of aqueous ammonia which will be used and stored on-site. However, as with aqueous hypochlorite, the use of aqueous

ammonia instead of the much more hazardous anhydrous ammonia (i.e. ammonia that is not diluted with water) poses far less risk. .

To assess the potential impacts associated with an accidental release of ammonia, staff typically evaluates where four “bench mark” exposure levels of ammonia gas occur off-site. These include: 1) the lowest concentration posing a risk of lethality, 2,000 ppm; 2) the Immediately Dangerous to Life and Health (IDLH) level of 300 ppm; 3) the Emergency Response Planning Guideline (ERPG) level 2 of 150 ppm (recently changed from the 200 ppm value), which is also the RMP level 1 criterion used by EPA and California; and 4) the level considered by the Energy Commission staff to be without serious adverse effects on the public for a one-time exposure of 75 ppm. (A detailed discussion of the exposure criteria considered by staff and their applicability to different populations and exposure-specific conditions is provided in Appendix A of this analysis.) If the potential exposure associated with a potential release exceeds 75 ppm at any public receptor, staff will presume that the potential release poses a risk of significant impact. However, staff will also assess the probability of occurrence of the release and/or the nature of the potentially exposed population. Staff may, based on such analysis, determine that the likelihood and extent of potential exposure are not sufficient to support a finding of potentially significant impact.

The AFC (section 6.15.2.2.4) provided the results of modeling for a worst case and alternative case accidental release of aqueous ammonia. The worst-case release scenario postulated a spontaneous catastrophic failure of one of the two storage tanks resulting in the release of the entire 30,000 gallons of aqueous ammonia. In conducting this analysis, it was assumed that spilled material would be contained in the 60-foot by 30-foot containment area (~1800sq. ft.) below the storage vessel. Two layers of plastic balls will also be held within this containment structure which will serve to limit the surface area of any spill aqueous ammonia. The tanker truck pad will also have a bermed area which drains into this structure. The analysis assumed winds of 1.5 meters per second and atmospheric stability category F would exist at the time of the accidental release. An air temperature of 97º F was assumed. The US EPA approved DEGADIS air dispersion model was used to estimate airborne concentrations of ammonia. These analyses were designed to predict the maximum possible impacts based on distance from the storage tank without regard to specific direction of transport.

The alternative analysis consists of the accidental release of 8,000 gallons of aqueous ammonia from the delivery tanker truck during transfer to the storage tanks. The spilled ammonia would flow to the same covered collection sump as in the worst-case scenarios but more realistic meteorological conditions were used as inputs to the DEGADIS air dispersion model. Atmospheric Stability Class D (instead of the more conservative F) was used, a lower ambient temperature was assumed (58º F), and a wind speed of 2.8 m/s was assumed.

The results indicated that concentrations exceeding 75 PPM would be confined within the project site (916 feet from the storage tanks for the worst-case and 724 feet for the alternative scenario).

HYDRAZINE

An aqueous solution of 34% hydrazine is proposed for use as an oxygen scavenger for boiler feed water. Pure hydrazine is very toxic, very volatile, and is very hazardous to handle as it can ignite without an open flame or other ignition source. Many of these concerns are eliminated by use of an aqueous solution containing less than 35 percent hydrazine. However, if aqueous hydrazine is spilled resulting in a pool exposed to the atmosphere or if hydrazine is volatilized out of solution by a fire, the resultant fumes will remain very toxic.

In a response to staff's data requests, Duke replied that 347 pounds of aqueous hydrazine will be stored in a special storage building containing a double-walled storage tank. The building will be surrounded by a berm. The bermed area will not drain to a subsurface storage containment area nor will the area where the delivery vehicle parks be bermed. The Applicant did not conduct an Off-Site Consequence Analysis to evaluate the consequences of a spill into the bermed area.

Staff conducted its own modeling associated with the use of hydrazine at the proposed MBPP. Staff assumed loss of contents into the bermed area and used the US EPA SCREEN3 air dispersion model. Staff used the National Research Council's Short Term Public Emergency Exposure Guidance Level (SPEGL) of 0.12 ppm as the Level of Concern. SPEGLs are defined as an acceptable ceiling concentration for a single unpredicted short-term exposure to the public. This modeling indicated significant impacts for a considerable distance if aqueous hydrazine is spilled.

Staff believes that suitable alternatives exist to the use of aqueous hydrazine, one of which is a solid whereby no off-site impacts would exist should an accidental spill occur. However, should the Applicant continue to propose the use of aqueous hydrazine at the MBPP, the following mitigation measures should be implemented:

1. An aqueous hydrazine Safety Management Plan shall be prepared, including the details identified below as well as other safe work practices.
2. The delivery vehicle transfer area shall be bermed to contain the maximum amount of aqueous hydrazine stored in the vehicle tank.
3. The unloading and transfer to the hydrazine storage building shall be performed by the delivery vehicle driver and shall be supervised and monitored by at least one facility staff person who shall stand by with a pressurized water hose to dilute any spilled hydrazine.
4. In the event of a spill of hydrazine, the spill will be contained, diluted with water, and neutralized with sodium hypochlorite. Neutralized hydrazine shall be absorbed with materials such as clay, sand, or a commercial absorbent, and disposed of in an appropriate manner.
5. Neutralization chemical and absorbents shall be stored in close proximity to the unloading site.
6. The Applicant shall ensure that the delivery truck person is trained and equipped with personal protective equipment by the commercial supplier. The facility staff

person shall be trained and equipped with personal protective equipment which shall consist of at the minimum butyl rubber gloves, boots, hard hat, apron or splash suit, and a face shield with safety glasses or goggles. Chemically impermeable suits and NIOSH approved full-face positive pressure supplied air respirators will also be available at the unloading site and at the facility control room.

7. Facility staff are to be trained in the safety procedures that are to be implemented during the unloading, transfer, and storage of aqueous hydrazine and these procedures will be posted at the hydrazine storage building and will be fully described in the Aqueous Hydrazine Safety Management Plan, the Business Plan, and the RMPP.

If these safety procedures are implemented, staff has determined that if a spill of aqueous hydrazine should occur, off-site impacts would be insignificant due to the small amount of hydrazine available for spilling and the fast remediation of any spill.

SEISMIC ISSUES

A hazardous materials spill could also occur as a result of an earthquake causing a failure of a hazardous materials storage tank. The quake could also cause the failure of the secondary containment system (berms and dikes) as well as electrically controlled valves, pumps, neutralization systems and the foam vapor suppression system. The failure of all these preventive control measures might then result in a vapor cloud of hazardous materials moving off-site and impacting the residents and workers in the surrounding community. This concern over earthquake safety is heightened by the Loma Prieta earthquake of 1989, the Northridge earthquake of 1994, and the earthquake in Kobe, Japan in January 1995.

Information obtained after the January 1994 Northridge earthquake showed that some damage was caused to several large storage tanks and smaller tanks associated with the water treatment system of a cogeneration facility. Those tanks with the greatest damage - including seam leakage - were older tanks while the newer tanks sustained displacements and failures of attached lines. Therefore, staff conducted an analysis of the codes and standards, which should be followed in adequately designing and building storage tanks and containment areas to withstand a large earthquake. Referring to the sections on GEOLOGIC HAZARDS and FACILITY DESIGN in the AFC, staff notes that the proposed facility will be designed and constructed to the applicable standards of the California Building Code for Seismic Zone 4(AFC page 6.3-20). Therefore, staff determined that tanks failures during seizmic events are very unlikely and do not represent a significant risk to the public.

TRANSPORTATION OF HAZARDOUS MATERIALS

The transportation of hazardous materials to the facility is usually of great concern to the residents and workers in the surrounding community. Hazardous materials, including aqueous ammonia,sodium hypochlorite, and others will be transported to the facility via tanker truck. Staff is unable to adequately assess the risks associated with transportation of hazardous materials until responses to staff's data requests are provided.

CUMULATIVE IMPACTS

Staff reviewed the potential for the operation of the MBPP combined with existing industrial facilities to result in cumulative impacts on the population within the area. Projects that could potentially contribute to cumulative impacts are those located in the same geographic area of influence defined as within a 1-mile radius of the proposed power plant. Because there already exists a power generation facility on this site, the risks and hazards surrounding the use of hazardous materials has already been addressed for the existing facility and for the surrounding industries. Staff finds that the replacement of the power generating facilities at this site would not add significant cumulative impacts to those already encountered and addressed. Staff finds that the facility, as proposed by the Applicant and with the additional mitigation measures proposed by the Staff, poses a minimal risk of accidental release during storage and use which could result in off-site impacts. Transportation risks have yet to be determined. Therefore, the direct impacts of the project cannot be determined at this time.

APPLICANT'S PROPOSED MITIGATION

The potential for accidents resulting in the release of hazardous materials is greatly reduced by the implementation of a safety management program, which includes the use of both engineering and administrative controls. Administrative controls include the development and implementation of a Safety Management Plan. Elements of facility controls and the safety management plan are summarized below.

ENGINEERING CONTROLS

Engineering controls help to prevent accidents and releases (spills) from moving off-site and impacting the community by incorporating engineering safety design criteria into the design of the facility. The engineered safety features proposed by the applicant for use at this facility include:

- construction of curbs, berms, and/or catchment basins in the hazardous materials storage areas to contain accidental releases that might happen during storage or delivery;
- physical separation of stored chemicals in separate containment areas in order to prevent accidental mixing of incompatible materials which may result in the evolution and release of toxic gases or fumes;

- a 1,800 square foot containment area which will surround the two 30,000 gallon aqueous ammonia storage tanks;
- a sloped containment pad for the aqueous ammonia tanker truck delivery area that will drain into the same subsurface covered sump placed beneath the storage tanks; and
- process protective systems including automatic shut-off valves, double-wall piping, and fire protection systems.

ADMINISTRATIVE CONTROLS

Administrative controls also help to prevent accidents and releases (spills) from moving off-site and impacting the community by establishing worker training programs and process safety management programs and by complying with all applicable health and safety laws, ordinances and standards.

The worker health and safety program proposed by the Applicant for use at this facility will include (but is not limited to) the following elements:

- worker training regarding chemical hazards, health and safety issues, and hazard communication;
- the proper use of personal protective equipment;
- safety operating procedures for operation and maintenance of systems utilizing hazardous materials;
- fire safety and prevention; and emergency response actions including facility evacuation, hazardous material spill cleanup, and fire prevention.

At the facility, the project owner will designate an individual who has the responsibility and authority to ensure a safe and healthful workplace. The project health and safety professional oversees the health and safety program and has the authority to halt any action or modify any work practice in order to protect the workers, facility, and the surrounding community or in the event that the health and safety program is violated.

The facility Process Safety Management Program includes a program for the regular inspection and maintenance of equipment, valves, piping, and appurtenances. Additionally, the process safety management program requires that only trained facility personnel are assigned to the transfer and handling of hazardous chemicals.

The facility will also prepare a Hazardous Materials Business Plan and a Risk Management Plan (RMP) and modify the existing Pill Prevention Control and Countermeasures (SPCC) Plan.

ON-SITE SPILL RESPONSE

In order to address the issue of spill response, the facility will prepare and implement an Emergency Response Plan which includes information on: hazardous

materials contingency and emergency response procedures, spill containment and prevention systems, personnel training, spill notification, on-site spill containment, prevention equipment and capabilities, etc. Emergency procedures will be established which include evacuation, spill cleanup, hazard prevention, and emergency response.

STAFF MITIGATION

The worst-case accidental release scenario evaluated by Duke Energy in the AFC assumed that accidental spills of aqueous ammonia would occur from the storage vessel into the basin below the storage vessel or from a tanker truck into the same catchment system. Staff believes that the most likely event resulting in a spill would be during transfer from the delivery tanker to the storage tank. Staff also believes that if the applicant continues to propose the use of aqueous hydrazine, the potential for a spill during transfer from the delivery vehicle to the storage container is possible. Staff therefore proposes a condition (HAZ-3) requiring development of a safety management plan for the delivery of aqueous ammonia and HAZ-7 for the delivery of aqueous hydrazine. The developments of these two Safety Management Plan addressing delivery of ammonia and hydrazine will further reduce the risk of any accidental release not addressed by the proposed spill prevention mitigation measures and the required Risk Management Plan (RMP).

Due to incomplete sections of the AFC and lack of response to staff's data requests on the transportation of hazardous materials to the facility, staff was unable to assess this issue.

FACILITY CLOSURE

The requirements for the handling of hazardous materials remain in effect until such materials are removed from the site regardless of facility closure. Therefore, the facility owners are responsible for continuing to handle such materials in a safe manner, as required by applicable laws. In the event that the facility owner abandons the facility in a manner, which poses a risk to surrounding populations, staff will coordinate with the California Office of Emergency Services, San Luis Obispo County Environmental Health Department, and the California Department of Toxic Substances Control (DTSC) to ensure that any unacceptable risk to the public is eliminated. Funding for such emergency action can be provided by federal, state or local agencies until the cost can be recovered from the responsible parties (O.E.S. 1990).

CONCLUSIONS AND RECOMMENDATIONS

Staff's evaluation of the proposed project (with staff's proposed mitigation measures) indicates that hazardous materials use will pose no potential for significant impacts on the public. The potential for risks due to the transportation of hazardous materials to the facility remains to be determined. With adoption of the proposed conditions of certification, the proposed project may comply with all applicable laws, ordinances, regulations and standards (LORS) (pending resolution

of the transportation issue). In response to Health and Safety Code, section 25531 et seq., the applicant will be required to develop an RMP. The RMP will be submitted to EPA, San Luis Obispo County, and staff for evaluation. To insure adequacy of the RMP, staff's proposed conditions of certification require that the RMP be submitted for concurrent review by EPA, San Luis Obispo County and staff. In addition, staff's proposed conditions of certification also require San Luis Obispo County's acceptance of the RMP and staff's approval of the RMP prior to delivery of any hazardous materials to the facility.

Staff cannot make a recommendation to the Energy Commission at this time pending receipt and assessment of staff's data requests regarding the transportation of hazardous materials.

PROPOSED CONDITIONS OF CERTIFICATION

HAZ-1 The project owner shall not use any hazardous material at the MBPP not listed in Appendix C, below, or in greater quantities or strengths than those identified by chemical name in Appendix B, below, unless approved in advance by the CPM.

Verification: The project owner shall provide to the Compliance Project Manager (CPM), in the Annual Compliance Report, a list of hazardous materials contained at the facility in reportable quantities.

HAZ-2 The project owner shall provide a Risk Management Plan to San Luis Obispo County and the CPM for review at the time the plans are first submitted to the U.S. Environmental Protection Agency (EPA). The project owner shall include all recommendations of San Luis Obispo County and the CPM in the final document. A copy of the final plans, including all comments, shall be provided to San Luis Obispo County and the CPM once approved by EPA.

Verification: At least sixty (60) days prior to the delivery of aqueous ammonia to the proposed storage facility, the project owner shall provide the final plans listed above and accepted by San Luis Obispo County to the CPM for approval.

HAZ-3 The project owner shall develop and implement a Safety Management Plan for delivery of aqueous ammonia and aqueous sodium hypochlorite. The plan shall include procedures, protective equipment requirements, training and a checklist. It shall also include a section describing all measures to be implemented to prevent mixing of these chemicals with incompatible hazardous materials.

Verification: At least sixty days prior to the delivery of aqueous ammonia or aqueous sodium hypochlorite to their storage tanks, the project owner shall provide a safety management plan as described above to the CPM for review and approval.

HAZ-4 The aqueous ammonia storage facility shall be designed to either the ASME Pressure Vessel Code and ANSI K61.6 or to API 620. In either case, the storage tank shall be protected by a secondary containment basin capable of holding 150% of the storage volume plus the volume associated with 24 hours of rain assuming the 25-year storm.

Verification: At least sixty days prior to delivery of aqueous ammonia to the storage tanks, the project owner shall submit final design drawings and specifications for the ammonia storage tank and secondary containment basin to the CPM for review and approval.

HAZ-5 The project owner shall direct all vendors delivering aqueous ammonia to the site to use only transport vehicles which meet or exceed the specifications of DOT Code MC-307.

Verification: At least sixty (60) days prior to receipt of aqueous ammonia on site, the project owner shall submit copies of the notification letter to supply vendors indicating the transport vehicle specifications to the CPM for review and approval.

HAZ-6 The project owner shall direct all vendors delivering any hazardous material to the site to use only the route(s) approved by the CPM.

Verification: At least sixty (60) days prior to receipt of any hazardous materials on site, the project owner shall submit copies of the required transportation route limitation to the CPM for review and approval.

HAZ-7 An aqueous hydrazine Safety Management Plan shall be prepared and include the following:

1. The delivery vehicle transfer area shall be bermed to contain the maximum amount of aqueous hydrazine stored in the vehicle tank.
2. The unloading and transfer to the hydrazine storage building shall be performed by the delivery vehicle driver and shall be supervised and monitored by at least one facility staff person who shall stand by with a pressurized water hose to dilute any spilled hydrazine.
3. In the event of a spill of hydrazine, the spill will be contained, diluted with water, and neutralized with sodium hypochlorite. Neutralized hydrazine shall be absorbed with materials such as clay, sand, or a commercial absorbent, and disposed of in an appropriate manner.
4. Neutralization chemical and absorbents shall be stored in close proximity to the unloading site.
5. The Applicant shall ensure that the delivery truck person is trained and equipped with personal protective equipment by the commercial supplier. The facility staff person shall be trained and equipped with personal protective equipment which shall consist of at the minimum butyl rubber gloves, boots, hard hat, apron or splash suit, and a face shield with safety glasses or goggles. Chemically impermeable suits and NIOSH approved full-face positive pressure supplied air respirators will also be available at the unloading site and at the facility control room.
6. Facility staff are to be trained in the safety procedures that are to be implemented during the unloading, transfer, and storage of aqueous hydrazine and these procedures will be posted at the hydrazine storage building and will be fully described in the Aqueous Hydrazine Safety Management Plan, the Business Plan, and the RMPP.

Verification: At least sixty (60) days prior to receipt of aqueous hydrazine on site, the project owner shall submit copies of the required Safety Management Plan to the CPM for review and approval.

REFERENCES

AIChE (American Institute of Chemical Engineers). 1989. Guidelines for Technical Management of Chemical Process Safety, AIChE, New York, NY 10017.

AIChE (American Institute of Chemical Engineers). 1994. Guidelines for Implementing Process Safety Management Systems, AIChE, New York, NY 10017.

API (American Petroleum Institute). 1990. Management of Process Hazards, API Recommended Practice 750; American Petroleum Institute, First Edition, Washington, DC, 1990.

Baldcock, P.J. (date unknown). Accidental Releases of Ammonia: An Analysis of Reported Incidents. (unknown source).

Davies, P.A. and Lees, F.P. 1992. "The Assessment of Major Hazards: The Road Transport Environment for Conveyance of Hazardous Materials in Great Britain." Journal of Hazardous Materials, 32: 41-79.

DUKE (Duke Energy Morro Bay LLC) 2000a. Application for Certification, Volumes 1a-1b, II-IV, Morro Bay Power Plant Project (00-AFC-12). Submitted to the California Energy Commission on October 23, 2000.

DUKE (Duke Energy Morro Bay LLC) 2000b. Topographic Maps (USGS 7.5 minute series), Quadrangles: Morro Bay North, Morro Bay South, Atascadero, San Luis Obispo, and Cayucos. Submitted to California Energy Commission on October 25, 2000.

FEMA (Federal Emergency Management Agency). 1989. Handbook of Chemical Hazard Analysis Procedures, Federal Emergency Management Agency, Washington, DC, 1989.

Lees, F.P. 1998). Loss Prevention in the Process Industries, Vols. I, II and III. Second Edition, Butterworths.

NFPA (National Fire Protection Association). 1987. NFPA 85A, Prevention of Furnace Explosions in Fuel Oil and Natural Gas Fired Single Burner Boiler Furnaces, National Fire Protection Association, Batterymarch Park, Quincy, MA, 1987.

NRC (National Research Council). 1979. Ammonia. Subcommittee on Ammonia. Committee on Medical and Biologic Effects of Environmental Pollutants. Division of Medical Sciences, Assembly of Life Sciences, National Research Council (NRC), Baltimore, Maryland, University Park Press (NTIS No. PB 278-027).

Uniform Fire Code (UFC) 1997. International Fire Code Institute, Whittier, CA

USOSHA (United States Occupational Safety and Health Administration). 1993. Process Safety Management / Process Safety Management Guidelines For Compliance. U.S. Department of Labor, Washington, DC.

Vilchez, J.A., Sevilla, S., Montiel, H. and J. Casal. 1995. "Historical Analysis of Accidents in Chemical Plants and in the Transportation of Hazardous Materials." J. Loss Prev. Process Ind. 8(2): 87-96

APPENDIX A

HAZARDOUS MATERIAL MANAGEMENT

BASIS FOR STAFF'S USE OF 75 PPM AMMONIA EXPOSURE CRITERIA

Staff uses a health-based airborne concentration of 75 ppm to evaluate the significance of impacts associated with potential accidental releases of ammonia. While this level is not consistent with the 200-ppm level used by EPA and Cal/EPA in evaluating such releases pursuant the Federal Risk Management Program and State Accidental Release Program, it is appropriate for use in staff's CEQA analysis. The Federal Risk Management Program and the State Accidental Release Program are administrative programs designed to address emergency planning and ensure that appropriate safety management practices and actions are implemented in response to accidental releases. However, the regulations implementing these programs do not provide clear authority to require design changes or other major changes to a proposed facility. The preface to the Emergency Response Planning Guidelines (ERPGs) states that "these values have been derived as planning and emergency response guidelines, **not** exposure guidelines, they do not contain the safety factors normally incorporated into exposure guidelines. Instead they are estimates, by the committee, of the thresholds above which there would be an unacceptable likelihood of observing the defined effects." It is staff's contention that these values apply to healthy adult individuals and are levels that should not be used to evaluate the acceptability of avoidable exposures for the entire population. While these guidelines are useful in decision making in the event that a release has already occurred (for example, prioritizing evacuations), they are not appropriate for and are not binding on discretionary decisions involving proposed facilities where many options for mitigation are feasible. CEQA requires permitting agencies making discretionary decisions to identify and mitigate potentially significant impacts through changes to the proposed project.

Staff has chosen to use the National Research Council's 30 minute Short Term Public Emergency Limit (STPEL) for ammonia to determine the potential for significant impact. This limit is designed to apply to accidental unanticipated releases and subsequent public exposure. Exposure at this level should not result in serious effects but would result in "strong odor, lacrimation, and irritation of the upper respiratory tract (nose and throat), but no incapacitation or prevention of self-rescue." It is staff's opinion that exposures to concentrations above these levels pose significant risk of adverse health impacts on sensitive members of the general public. It is also staff's position that these exposure limits are the best available criteria to use in gauging the significance of public exposures associated with potential accidental releases. It is, further, staff's opinion that these limits constitute an appropriate balance between public protection and mitigation of unlikely events, and are useful in focusing mitigation efforts on those release scenarios that pose real potential for serious impacts on the public. Table 1 provides a comparison of

the intended use and limitations associated with each of the various criteria that staff considered in arriving at the decision to use the 75-ppm STPEL. Appendix B provides a summary of adverse effects which might be expected to occur at various airborne concentrations of ammonia.

HAZARDOUS MATERIAL MANAGEMENT
APPENDIX A TABLE 1
Acute Ammonia Exposure Guidelines

Guideline	Responsible Authority	Applicable Exposed Group	Allowable Exposure Level	Allowable* Duration of Exposures	Potential Toxicity at Guideline Level/Intended Purpose of Guideline
IDLH[2]	NIOSH	Workplace standard used to identify appropriate respiratory protection.	300 ppm	30 min.	Exposure above this level requires the use of "highly reliable" respiratory protection and poses the risk of death, serious irreversible injury or impairment of the ability to escape.
IDLH/10[1]	EPA, NIOSH	Work place standard adjusted for general population factor of 10 for variation in sensitivity	30 ppm	30 min.	Protects nearly all segments of general population from irreversible effects
STEL[2]	NIOSH	Adult healthy male workers	35 ppm	15 min. 4 times per 8 hr day	No toxicity, including avoidance of irritation
EEGL[3]	NRC	Adult healthy workers, military personnel	100 ppm	Generally less than 60 min.	Significant irritation but no impact on personnel in performance of emergency work; no irreversible health effects in healthy adults. Emergency conditions one time exposure
STPEL[4]	NRC	Most members of general population	50 ppm 75 ppm 100 ppm	60 min. 30 min. 10 min.	Significant irritation but protects nearly all segments of general population from irreversible acute or late effects. One time accidental exposure
TWA[2]	NIOSH	Adult healthy male workers	25 ppm	8 hr.	No toxicity or irritation on continuous exposure for repeated 8 hr. work shifts
ERPG-2[5]	AIHA	Applicable only to emergency response planning for the general population (evacuation) (not intended as exposure criteria) (see preface attached)	200 ppm	60 min.	Exposures above this level entail** unacceptable risk of irreversible effects in healthy adult members of the general population (no safety margin)

1) (EPA 1987) 2) (NIOSH 1994) 3) (NRC 1985) 4) (NRC 1972) 5) (AIHA 1989)
* The (NRC 1979), (WHO 1986), and (Henderson and Haggard 1943) all conclude that available data confirm the direct relationship to increases in effect with both increased exposure and increased exposure duration.
** The (NRC 1979) describes a study involving young animals, which suggests greater sensitivity to acute exposure in young animals. The (WHO 1986) warns that the young, elderly, asthmatics, those with bronchitis and those that exercise should also be considered at increased risk based on their demonstrated greater susceptibility to other non-specific irritants.

REFERENCES FOR APPENDIX A, TABLE 1

AIHA. 1989. American Industrial Hygienists Association, Emergency Response Planning Guideline, Ammonia, (and Preface) AIHA, Akron, OH.

EPA. 1987. U.S. Environmental Protection Agency, Technical Guidance for Hazards Analysis, EPA, Washington, D.C.

NRC. 1985. National Research Council, Criteria and Methods for Preparing Emergency Exposure Guidance Levels (EEGL), short-term Public Emergency Guidance Level (SPEGL), and Continuous Exposure Guidance Level (CEGL) Documents, NRC, Washington, D.C.

NRC. 1972. Guideline for short-term Exposure of The Public To Air Pollutants. IV. Guide for Ammonia, NRC, Washington, D.C.

NIOSH. 1994. National Institute of Occupational Safety and Health, Pocket Guide to Chemical Hazards, U.S. Department of Health and Human Services, Washington D.C., Publication numbers 94-116.

WHO. 1986. World health Organization, Environmental Health Criteria 54, Ammonia, WHO, Geneva, Switzerland.

ABBREVIATIONS FOR APPENDIX A, TABLE 1

ACGIH, American Conference of Governmental and Industrial Hygienists

AIHA, American Industrial Hygienists Association

EEGL, Emergency Exposure Guidance Level

EPA, Environmental Protection Agency

ERPG, Emergency Response Planning Guidelines

IDLH, Immediately Dangerous to Life and Health Level

NIOSH, National Institute of Occupational Safety and Health

NRC, National Research Council

STEL, Short Term Exposure Limit

STPEL, Short Term Public Emergency Limit

TLV, Threshold Limit Value

WHO, World Health Organization

APPENDIX B

[Attach AFC Table 6.15-5]

LAND USE

Sue Walker and Mark Hamblin

INTRODUCTION

The Morro Bay Power Plant Project ("MBPP," or "project") involves the construction and operation of a 1,200 Megawatt (MW) combined cycle power plant. The project is proposed by Duke Energy Morro Bay, LLC (herein referenced as "Applicant"). The project involves the replacement, or "modernization," of the existing 1,030 MW Morro Bay Power Plant, located within the City of Morro Bay (City), San Luis Obispo County, California. The site is located near Morro Bay Harbor, and is bordered on the west by Embarcadero Road and on the east by State Highway 1.

Refer to the **PROJECT DESCRIPTION** of the Preliminary Staff Assessment (PSA) for a more detailed discussion of the modernization activities.

The land use analysis of the MBPP focuses on two main issues: (1) the project's consistency with land use plans, ordinances and policies; and, (2) the project's compatibility with existing and planned land uses. In general, an electric generation project and its related facilities can be incompatible with existing and planned land uses when it creates unmitigated noise, dust, public health hazard or nuisance, traffic, or visual impacts. These areas are discussed in detail in sections of this PSA.

LAWS, ORDINANCES, REGULATIONS AND STANDARDS

STATE

CALIFORNIA COASTAL ACT OF 1976 (PUB. RESOURCES CODE §30000 ET SEQ.)

The California Coastal Act (Coastal Act) establishes a comprehensive scheme to govern land use planning along the entire California coast. The Coastal Act sets forth general policies (Public Resources Code §30200 et seq.) which govern the California Coastal Commission's (Coastal Commission's) review of permit applications and local plans. Specific to energy facilities, the Coastal Act requires that the Coastal Commission designate specific locations within the Coastal Zone where the establishment of a thermal power plant subject to the Warren-Alquist Act could "prevent the achievement of the objectives" of the Coastal Act (§30413(b)).

Pursuant to § 30500 of the Coastal Act, each local government lying within the Coastal Zone is required to prepare a Local Coastal Program (LCP) for management of that portion of the Coastal Zone within its jurisdiction. The California Coastal Commission retains permit authority over development until such time as the local LCP is adopted and certified by the Commission. Once the Coastal Commission certifies a LCP, the authority to issue Coastal Development Permits (CDPs) for development within the Coastal Zone is delegated to the local jurisdiction (§30519(a)). Notwithstanding § 30519(a), § 30600(a) of the Coastal Act

specifies that a project proponent must obtain a CDP for any development "other than a facility subject to the provisions of Section 25500" (i.e., a thermal power plant or related facility subject to the Warren-Alquist Act).

The City has a LCP (a.k.a. Morro Bay Local Coastal Program**)** certified by the Coastal Commission that includes a Coastal Land Use Plan (CLUP), Zoning Ordinance and Land Use Map. Currently, the City is combining the CLUP with its General Plan.

The Coastal Act also requires the Coastal Commission to designate specific locations within the coastal zone where the establishment of a thermal power plant subject to the Warren-Alquist Act could prevent the achievement of the objectives of the Coastal Act (Section 30413 (b)). Under Section 30413 (b) it states

> "(b) The commission shall, prior to January 1, 1978, and after one or more public hearings, designate those specific locations within the coastal zone where the location of a facility as defined in Section 25110 would prevent the achievement of the objectives of this division; provided, however, that specific locations that are presently used for such facilities and reasonable expansion thereof shall not be so designated . . . The commission shall transmit a copy of its report prepared pursuant to this subdivision to the State Energy Resources Conservation and Development Commission".

The Coastal Commission has not designated the existing Morro Bay generation station as a site that is inappropriate for the facility or for reasonable expansion. The existing Morro Bay facility is shown on "Coastal Commission Power Plant Siting Study" maps 102 and 104.

WARREN-ALQUIST ACT (PUB. RESOURCES CODE § 25500 ET SEQ.)

Pursuant to § 25120 of the Warren-Alquist Act, thermal power plants are defined as

> "any stationary or floating electrical generating facility using any source of thermal energy, with a generating capacity of 50 MW or more, and any appurtenant facilities thereto." Per the Warren-Alquist Act, the California Energy Commission (Energy Commission) is the sole State permitting agency for the siting, development, alteration, or expansion of thermal power plants exceeding 50 MW. Under the Warren-Alquist Act, the Energy Commission may pre-empt local land use requirements. Per § 25500 of the Warren-Alquist Act, the Energy Commission's authority is stated as "in accordance with the provisions of this division, the commission shall have the exclusive power to certify all sites and related facilities in the state, whether a new site and related facility or a change or addition to an existing facility. The issuance of a certificate by the [Energy] commission shall be in lieu of any permit, certificate, or similar document required by any state, local or regional agency, or federal agency to the extent permitted by federal law, for such use of the site and related facilities, and shall supercede any applicable statute, ordinance, or regulation of any state, local, or regional agency, or federal agency to the extent permitted by federal law."

Pursuant to § 25529 of the Warren-Alquist Act, the Energy Commission shall require public access to coastal resources as a condition of certification of a facility proposed in the Coastal Zone as follows:

"When a facility is proposed to be located in the Coastal Zone or any other area with recreational, scenic, or historic value, the [Energy] Commission shall require, as a condition of certification of any facility contained in the application, that an area be established for public use, as determined by the Commission. Lands within such area shall be acquired and maintained by the Applicant and shall be available for public access and use, subject to restrictions required for security and public safety. The Applicant may dedicate such public use zone to any local agency agreeing to operate or maintain it for the benefit of the public. If no local agency agrees to operate or maintain the public use zone for the benefit of the public, the Applicant may dedicate such zone to the state. The [Energy] Commission shall also require that any facility to be located along the coast or shoreline of any major body of water be set back from the shoreline to permit reasonable public use and to protect scenic and aesthetic values."

SUBDIVISION MAP ACT (PUB. RESOURCES CODE § 66410-66499.58)

The Map Act provides for land divisions by the local jurisdictional authority, and requires each jurisdiction to adopt an ordinance regulating such divisions for which the Map Act requires a tentative and final parcel map.

The original MBPP property consisted of approximately 134 acres. The property was later lot line adjusted to create two parcels (Lot 1 – 107.35 ac., Lot 2 – 26.27 ac.) by PG&E. Lot Line Adjustment MBAL 97-239 was approved by the City of Morro Bay Subdivision Review Board on December 29, 1997. The Certificate of Compliance that was prepared for the approved lot line adjustment project was recorded in the Office of the Recorder for the County of San Luis Obispo on February 25, 1998 identified as Document No. 1998-010271. Duke Energy purchased the Lot 1 in 1998 from PG&E. PG&E owns Lot 2.

The applicant states that the "Den Dulk" property consists of six legal parcels. In June 2000 six Certificates of Compliance for the "Den Dulk" property were filed and recorded by the City (Duke, 2001a).

STATE TIDE AND SUBMERGED LANDS LEASING (PUB. RESOURCES CODE § 6701-6706)

The California State Lands Commission (State Lands Commission) is responsible for the management and administration of all lands owned by the State, including the leasing of tide and submerged lands within State jurisdiction (Division 6, Part 2, § 6701-6706 of the Public Resources Code).

During the late1930's the State Legislature statutorily transferred tide and submerged lands located along the coast in trust to local cities and counties in accordance to the Tideland Doctrine. Granted lands are monitored by the State Lands Commission to ensure compliance with the terms of the statutory grant. "These grants encourage the development of tidelands consistent with the public

trust, while requiring grantees to re-invest revenues produced from lands back into lands where they are generated" (State Lands Commission, 2001). The coastal cities and counties were then required to develop harbors to further State and national commerce (State Lands Commission, 2001).

The outfall channel of the existing MBPP is located within a tideland grant lease. The outfall channel is within an area that formerly consisted of submerged lands that have subsequently been filled and is subject to the Public Trust for Navigation, Fisheries and Commerce (the "Trust") (City of Morro Bay 2000a). An Outfall Agreement (lease) was entered into between the existing facility's original owner (Pacific Gas and Electric Company's (PG&E) and the County of San Luis Obispo in November 1954 for a period of 50 years (City of Morro Bay 2000a). Upon the City's incorporation in 1965, the City became the leaser, in trust, of the tide and submerged lands within its jurisdiction, including the responsibility for the administration of the project's Outfall Agreement. The project's existing Outfall Agreement expires November 15, 2004.

LOCAL

Staff reviewed various City land use-related planning documents relevant to the MBPP. A discussion of the project's conformity with applicable goals, policies, standards and regulations from these planning documents can be found in the subsection entitled Compliance with Laws, Ordinances, Regulations and Standards.

CITY OF MORRO BAY GENERAL PLAN

Under California State planning law, each incorporated City and County must adopt a comprehensive, long-term General Plan that governs the physical development of all lands under its jurisdiction. The General Plan consists of a statement of development policies and must include a diagram and text setting forth the objectives, principles, standards and proposals of the document. At a minimum, a General Plan has seven mandatory elements including Land Use; Circulation; Housing; Conservation; Open Space; Noise and Safety. The City adopted its comprehensive General Plan in 1988 (Duke 2000a). The City is currently combining its General Plan with its CLUP. As currently proposed, the combined General Plan/CLUP does not change any of the zoning or planning related issues associated with the project.

CITY OF MORRO BAY COASTAL LAND USE PLAN

The City's certified LCP includes the City's CLUP, Zoning Ordinance, and Land Use Map. The CLUP states the City's plans and policies for coastal areas consistent with the Coastal Act. The CLUP must be consistent with the City's General Plan; however, where inconsistencies occur between the two documents, the CLUP takes precedence. The CLUP primarily consists of: (1) a Land Use Map; and, (2) policies necessary to ensure the protection of resources and the regulation of development within the Coastal Zone. Elements of the CLUP are currently being incorporated into the City's General Plan to create a combined General Plan/CLUP.

Under the City's Land Use Map, which serves as the combined map for the General Plan and CLUP, the MBPP property as a whole is designated Coastal Development

Industrial with Planned Development, and includes Interim/Open Space Uses in Industrial Categories and Environmentally Sensitive Habitat overlays (Sheppard, Mullin, Richter & Hampton, 2001, Duke, 2000a). The term Coastal Development Industrial is not defined in the General Plan, CLUP or City Zoning Ordinance; it appears in the legend of the Land Use Map only. However, Coastal-Dependent Industrial is defined in all of the City's land use planning documents. Attorneys for the City have determined that, for the purposes of its land use planning documents, Coastal-Dependent Industrial and Coastal Development Industrial are synonymous (Sheppard, Mullin, Richter & Hampton, 2001). The City Coastal Land Use Plan defines the land use of the property as "Coastal-Dependent Industrial." Chapter II, page 23 of the LCP defines this term:

> "Coastal-Dependent Industrial Land Use: This land use specifically relates to those industrial land uses which are given priority by the Coastal Act of 1976 for location adjacent to the coastline. Examples of uses in this designation are thermal power plants, seawater intake structures, discharge structures, tanker support facilities, and other similar uses which must be located on or adjacent to the sea in order to function. The Morro Bay wastewater treatment facilities are protected in their present location since an important operational element, the outfall line, is coastal-dependent."

The LCP also contains the "Coastal Commission Power Plant Siting Study" (Figure 16) which shows the Morro Bay generating station property south of Morro Creek as "UNDESIGNATED CITY LAND AREA Power Plants Allowed." As stated in the City's Coastal Plan:

> "According to a California Energy Commission report entitled "Feasibility of Expansion of Existing Coastal Zone Power Plants," the power plant site is the minimal adequate area for expansion of small facilities whose location would not further affect the unique view corridor of Morro Rock and the report indicates that conversion is unfeasible due to a variety of factors. The study does conclude that expansion is feasible of a small scale facility utilizing either steam turbine, the existing generating system, combined cycle or combustion turbine."

CITY OF MORRO BAY DRAFT GENERAL PLAN/COASTAL LAND USE PLAN

The Public Draft General Plan/CLUP, dated August 2000, is comprised of seven elements, including Land Use; Circulation; Public Facilities and Services; Conservation and Open Space; Access and Recreation; Harbor Resources; and, Visual Resources and Scenic Highway (City of Morro Bay, 2000a). The General Plan/CLUP (City of Morro Bay, 2000b) has not been adopted by the City or certified by the Coastal Commission. The proposed General Plan/CLUP notes energy related development in several sections, including a goal and several policies specific to energy-related development and the existing MBPP.

CITY OF MORRO BAY ZONING ORDINANCE

Consistent with the City's General Plan and CLUP, the City's Zoning Ordinance (Municipal Code 17) designates the project site M-2, Coastal-Dependent Industrial

district, with Planned Development and Interim/Open Space Uses in Industrial Categories overlays (Duke, 2000a; City of Morro Bay, 2001a).

Section 17.24.150 of the City of Morro Bay Zoning Ordinance, adopted September 25, 1995 states:

> "The purpose of the M-2 district is to "provide districts for industrial development wherein manufacturing and other industries which require a site on or close to the ocean or harbor can locate and operate while maintaining an environment minimizing offensive or objectionable noise, dust, odor or other nuisances, all well designed and properly landscaped."

Section 17.40.030 of the City's Zoning Ordinance states:

> "The purpose of the planned development (PD) overlay zone, is to provide for detailed and substantial analysis of development on parcels which, because of location, size or public ownership, warrant special review. This overlay zone is also intended to allow for the modification of or exemption from the development standards of the primary zone which would otherwise apply if such action would result in better design or other public benefit."

(PD) requires that development must occur in accordance with a Precise Development Plan which has received discretionary approval from the City. Development is defined as "on land... the placement or erection of any solid material or structure...including any facility of any private, public or municipal utility" (Sheppard, Mullin, Richter & Hampton, 2001).

CITY OF MORRO BAY WATERFRONT MASTER PLAN

In 1989 the City Council authorized the establishment of a Waterfront Committee to develop a comprehensive Waterfront Master Plan (Master Plan) that would enhance and protect waterfront resources and a fishing village image. Draft Plans were prepared from 1993 through 1995 (City of Morro Bay, 2000b). In May, 1996, the City Council adopted Chapter 5 of the Master Plan, which provides design guidelines for the "waterfront area" (City Resolution No. 43-96). However, other portions of the Master Plan, including transportation and harbor improvements are currently considered recommendations only (City of Morro Bay, 2000a). The Master Plan has not been certified by the Coastal Commission (Duke, 2000a).

The Master Plan identifies: four planning areas; transportation and harbor improvement projects within these planning areas; development proposals and related approval conditions for other types of projects within the planning areas; and, the above-referenced design guidelines (Chapter 5). The four planning areas identified in the Master Plan include the: Morro Rock/Coleman Park Area (Area 1); T-Piers/Fisherman Working Area (Area 2); Embarcadero Visitor Area (Area 3); and, Tidelands Park Area (Area 4) (City of Morro Bay, 1996).

The Master Plan notes several improvement projects in the vicinity of the existing MBPP. These include: connection of the two portions of the Embarcadero across

Morro Creek; additional pedestrian and bicycle access within the MBPP project area; improved transportation and circulation within the MBPP project area; low-impact recreational development within portions of the "Den Dulk" property (a project-related property); and, visual/design improvements within the harbor area (City of Morro Bay, 1996).

In 1997 City Staff was pursuing a possible grant from the Department of Boating and Waterways for development of a boat launch ramp near the end of Coleman Drive, as part of implementation of the Master Plan. However, based upon public testimony and infeasible design components, the project was terminated and a Boating Access Facility (BAF) Committee was formed by City Council.

The BAF Committee was directed to provide recommendations for improvements to the Master Plan. Specific recommendations made by the BAF Committee included: elimination of boat launch ramp at "Target Rock;" increasing the width of a proposed pedestrian/bike bridge over Morro Creek for emergency access; and, a conceptual plan for boating access, storage facilities, and development of recreational and some commercial opportunities within the Master Plan planning areas. In September 1997 City Council concurred to amend the Master Plan to incorporate these recommendations (City of Morro Bay, 1997a).

The conceptual plan amended to the Master Plan includes development within a portion of the "Den Dulk" property. Development would include recreational facilities, including a skateboard park and parking area ("Area 5"), as well as a boat hoist/access area and associated parking lot ("Area 3") (City of Morro Bay, 1996). It is noted, however, that in September, 1997 City Staff recommended that development of these features should only be undertaken if the City acquires the "Den Dulk" property (City of Morro Bay, 1997b).

CITY OF MORRO BAY RESOLUTION NO. 22-01

On April 9, 2001 the City Council adopted Resolution No. 22-01 (Resolution). The Resolution addresses the City's recognition of: (1) the State's current position of "unprecedented regulatory and economic uncertainty with respect to energy matters;" (2) the acquisition of the existing MBPP by the Applicant as part of the State's plan to deregulate the electricity generation market; (3) on-going work between the City and the Applicant to develop, and enter into, a Memorandum of Understanding (discussed below) to provide for a mutually acceptable modernization of the existing MBPP; and, (4) local community support of the removal of the existing MBPP for a new, more efficient and modern facility, assuming compliance with all applicable environmental and regulatory requirements (City of Morro Bay, 2001b).

In identifying these issues, the Resolution:

1. Reaffirms [the City's] support for demolition of the existing power plant and construction of new, efficient, state of the art generation facilities to the terms of the Memorandum of Understanding;

2. Looks forward to continuing work within the [Energy Commission] process to constructively and rapidly resolve any remaining issues of local concern with respect to the modernization project;
3. Supports the timelines outlined in the [Energy Commission's] recent scheduling order for the project without compromising opportunities for meaningful public participation; and,
4. Calls upon [the Applicant], the [Energy Commission], the Coastal Commission, [the California Department of Transportation] Caltrans, and any other interested parties to work closely together with the City to see to it that impacts on the community during the multi-year modernization process are minimized and to ensure that the project will:

    a) Enhance the community, particularly surrounding beach and waterfront areas;
    b) Provide needed economic stability for the community; and,
    c) Provide increased, more efficient and more environmentally friendly power for the benefit of all residents of the State.

MEMORANDUM OF UNDERSTANDING: CITY OF MORRO BAY AND DUKE ENERGY MORRO BAY LLC

The City and Applicant entered into a Memorandum of Understanding (MOU) that was witnessed by the City Clerk on February 28, 2000 (City of Morro Bay, 2000a). As of April 15, 2001 the MOU remains a legally non-binding agreement between the two parties; however, the MOU notes that "in the future it will be necessary to make the terms of [the] MOU both more specific and legally binding upon one another" (City of Morro Bay, 2000a). The MOU notes that the Applicant and City "shall prepare a Development Agreement (or equivalent binding agreement) which will include a long-term plan for the modernization of the MBPP and use of its property, including the various project design features and conditions agreed to between Duke and the City" (City of Morro Bay, 2000a).

The stated Goals of the MOU are as follows:

- Resolve Issues Cooperatively;
- Provide Early Opportunities for Local Input;
- Prepare a Long-Term Plan;
- Demolish the Existing Plant and Replace it with a State of the Art Facility;
- Demolish Existing Oil Tanks;
- Provide Consistency with Local Regulations;
- Protect Environmental Resources;
- Protect Marine Resources;
- Protect Public Health and Safety;
- Guarantee Financial Benefits for the Community;
- Resolve Outfall Easement Lease Issues Cooperatively;
- Promotes Cooperation between Regulatory Agencies; and,
- Support Duke Investment of Capital for Modernization.

CITY OF MORRO BAY BALLOT MEASURES O AND P

In November, 2000 a majority of those voting within the City expressed support for the proposed MBPP by approving Ballot Measure O, a non-binding advisory measure that asked if City voters supported, in concept, development of the project, provided that it complied with applicable environmental and regulatory standards (Sheppard, Mullin, Richter and Hampton, 2001). At the same time, City voters defeated a companion measure, Ballot Measure P, that would have required voter approval of any General Plan amendments regarding construction of the project.

CITY OF MORRO BAY FLOOD DAMAGE PREVENTION ORDINANCE (NO. 477)

In 1968, Congress created the National Flood Insurance Program (NFIP) in response to the rising cost of taxpayer funded disaster relief for flood victims and the increasing amount of damage caused by floods.

The NFIP makes federally backed flood insurance available in communities that agree to adopt and enforce floodplain management ordinances to reduce future flood damage.

The NFIP is managed by the Federal Emergency Management Agency's (FEMA) Federal Insurance Administration and Mitigation Directorate. The Federal Insurance Administration manages the insurance component of the NFIP, and works closely with FEMA's Mitigation Directorate, which oversees the floodplain management aspect of the program.

The City has adopted a Flood Damage Prevention Ordinance (Ordinance No. 477, codified as Chapter 14.72 of the City's Zoning Ordinance) (Duke, 2000a). The current flood map associated with Ordinance No. 477 shows that the 100-year floodplain includes the lower reaches of the Morro Creek watershed; this area includes portions of the project site (Duke, 2000a).

As required by Ordinance No. 477, the Applicant must provide the City with a hydrologic analysis and facility design specifications that meet the applicable standards and requirements to ensure that: (1) the project does not adversely affect the flood carrying capacity of Morro Creek and the base flood water surface elevation adjacent to or upstream of the project site; and, (2) project features, including the levee system are both reasonably safe from flooding and comply with standards for anchoring, construction materials and methods, and elevation and flood-proofing (Duke, 2000a).

An alternative to the above would be to submit one or more requests to FEMA requesting that the applicable Flood Insurance Rate Map (FIRM) be amended or revised to reflect that the project site is situated above the base flood elevation (e.g. Letter of Map Revision). As may be necessary for this scenario, the dikes and berms surrounding the project site would likely need to be modified to meet construction standards established by FEMA (44 Code of Federal Regulations, § 65.10(b)) (Duke, 2000a).

Refer to the **SOILS AND WATER** section of the Preliminary Staff Assessment (PSA) for a more detailed discussion of flood prevention.

SAN LUIS OBISPO COUNTY & OTHER LOCAL LAND USE PLANS AND DOCUMENTS

The project site is located within the jurisdictional boundaries of the City. As such, operation of the project would not involve any discretionary reviews or approvals from the County of San Luis Obispo (County).

Construction of the project may require the leasing of one or more sites in either the County or a neighboring community within 20 miles of the project property (Duke, 2000a). These sites will be used for construction lay down/staging areas. However, the Applicant has not identified the specific locations of these areas. The AFC (Section 6.9.1) states that the selection criteria for the construction lay down/staging areas include: (1) Industrial zoning designations; (2) history of use for parking or industrial storage/construction support; (3) locations near major-thorough fares to minimize congestion associated with site access and departure; and, (4) locations where the intended use for construction support will not cause high visual contrast with land uses in the immediate site vicinity (Duke, 2000a).

To avoid undue speculation regarding potential construction-related lay down/staging areas that may be located outside of the City's jurisdiction, this analysis assumes that the Applicant will only lease such areas until construction is complete, and that the above criteria will be fully adhered to. Should these areas require either discretionary or administrative permits from either the County or a neighboring jurisdiction, compliance with all applicable sections of these jurisdictions' General Plan, Local Coastal Plan (if applicable) and Zoning Ordinances and other applicable policies would be required.

SETTING

The MBPP is located in the City of Morro Bay, San Luis Obispo County, California. The project site is situated west of State Highway 1, east of the Embarcadero, and south of Atascadero Road. The existing facility additionally includes a seawater intake structure located near the northern end of Morro Bay Harbor, and a cooling water discharge outfall ("Outfall Area") located north of Morro Rock. The site is surrounded by light industrial, coastal-dependent industrial, commercial, marine, residential, visitor-servicing, and recreational land uses.

SITE AND VICINITY DESCRIPTION

The MBPP site is made up of two parcels totaling 107 acres that are owned by the Applicant. PG&E filed an Application for a Lot Line Adjustment in 1997. Lot Line Adjustment MBAL 97-239 was approved by the City of Morro Bay Subdivision Review Board on December 29, 1997. The Certificate of Compliance that was prepared for the approved lot line adjustment project was recorded in the Office of the Recorder for the County of San Luis Obispo on February 25, 1998. The acreage of the existing facility is 9.61 acres, including the power plant buildings, transformers, stacks, shop, warehouse and office buildings, and parking (Duke,

2001b). The acreage of the proposed facility is approximately 14 acres, and would be located immediately northwest of the existing facility. The new facility acreage includes power plant equipment and structures, transformer, combined cycle units, heat recovery steam generators, gas turbine generator enclosure, administrative/warehouse and control building, substation, sound wall, and a transmission corridor to the existing PG&E electrical substation (Duke, 2001b). The PG&E substation property, owned by PG&E, is located northeast of the existing MBPP facility and is approximately 26.27 acres in size.

The majority of the site is designated Coastal Development Industrial with Planned Development, and includes Interim/Open Space Uses in Industrial Categories and Environmentally Sensitive Habitat overlays. Land-use designations for the site, including the proposed facility's "footprint," are depicted on **LAND USE Figure 1**. Land use designations surrounding the site include Residential, Commercial, Industrial, Environmentally Sensitive Habitat, Visitor Serving/District Commercial, and Mixed Uses. **LAND USE Figure 2** provides the land use designations of the general project vicinity.

The project site is zoned M-2, Coastal-Dependent Industrial district, with Planned Development and Interim/Open Space Uses in Industrial Categories overlays (Duke, 2000a). Adjacent zoning districts include M-1 (Light Industrial); R-2 (Duplex Residential); OA-1 and OA-2 (Open Area); ESH (Environmentally Sensitive Habitat); and, C-VS (Visitor Servicing Commercial) (Duke, 2000a). **LAND USE Figure 3** provides the zoning districts of the project site and surrounding vicinity.

Existing land uses in the project vicinity are depicted in **LAND USE Figure 4**. Land uses immediately surrounding the project site include residential, visitor services, industrial (light and coastal dependent), commercial, marine, and recreation.

Residential development exists to the northeast, east and southeast of the project site. The majority of these residential developments are low/medium and medium density. The nearest residential area is located approximately 900 feet southeast of the project property boundary, along Scott Street (Duke, 2000a). This development occurred following construction of the existing MBPP. A mobile home park is located immediately north of the project site.

LAND USE Figure 1
Land Use Designations of the Project Site

LAND USE Figure 2
Land Use Designations within One Mile of the Project Site

LAND USE Figure 3
Zoning Districts within One Mile of the Project Site

LAND USE Figure 4
Existing Land Uses within One Mile of the Project Site

Commercial areas of the City are made up of several uses, including motels, stores, restaurants, tourist facilities, commercial fishing and harbor-related facilities/establishments. The majority of the visitor-serving commercial facilities are located in the Main Street portion of the City, Morro Bay Boulevard, the Embarcadero and Market Street. The major visitor-serving resources of the City include Morro Rock, the Embarcadero area, Morro Park, Morro Strand State Beach, Morro Bay Golf Course, the North Morro Bay, Del Mar and Embarcadero commercial areas, and the bay front area (Duke, 2000a).

Industrial uses within the project's immediate vicinity include the existing MBPP, the PG&E substation, and the fisherman gear and storage area located north of the project site.

Marine land uses within the area include commercial fishing and a variety of services and facilities associated with the Morro Bay Harbor.

Sensitive lands and open space areas within the project vicinity include Morro Rock, Fairbanks Point, Black Hill Natural Area, Morro Creek, Chorro Creek, Los Osos Creek, and the Morro Bay Estuary (Duke, 2000a). Morro Rock is located approximately one-half mile from the project property; the lower reaches of Morro Creek run along the northern end of the project property. The remainder of these sensitive lands/open space areas are located approximately one mile or more away from the project property. Brief descriptions of these areas, as presented in the AFC, are provided below.

- **Morro Rock**: Morro Rock is located at the mouth of Morro Bay. It is connected to the mainland via a man-made strand of fill materials. An ecological preserve located on Morro Rock serves as a nesting area for peregrine falcons.
- **Fairbanks Point**: Fairbanks Point is located adjacent to Morro Bay State Park, along the City's southern limits. The State has acquired the Fairbanks Point property as an addition to Morro Bay State Park.
- **Black Hill Natural Area**: The Black Hill Natural Area is an upland portion of Morro Bay State Park. The predominant land cover is coastal sage scrub.
- **Morro, Chorro, and Los Osos Creeks**: These creeks serve as important coastal resources, and provide habitat for fish, other aquatic organisms, and migratory birds. Due to their environmental significance, the City's General Plan proposes to require an "open space treatment" of them. This treatment would require that any development adjacent to them must maintain their natural characteristics.
- **Morro Bay Estuary**: The Morro Bay Estuary (Estuary) is, generally, a natural estuary environment containing navigable area and a man-made harbor. Although heavily impacted by activities within and adjacent to it (for example, dredging, vessel discharges, urban and agricultural surface water runoff, etc.), the estuary serves as important habitat for migratory birds, and supports a variety of wildlife, including some threatened and endangered species and species of special concern. The estuary is part of the U.S. Environmental Protection Agency's (EPA's) National Estuary Program.

"Sensitive receptors" in general involve institutions that sustain an assemblage of people that require limited or reduced exposure to noise levels, air and water pollution emissions, and other nuisances that are associated with the normal operations of commercial and industrial operations (e.g. schools, hospitals, churches, etc.). There are twelve (12) offsite sensitive receptors within a one mile radius of the project property (Duke, 2000b). These sensitive receptors include:

- A day care center (447 Hillview Street)
- Morro Bay High School (235 Atascadero Road)
- Morro Elementary School (1130 Napa Avenue)
- Pacifica Preschool/Day Care Center (685 Monterey Avenue)
- A retirement home (1405 Teresa)
- Estero Bay Day School (853 Quintana Road)
- Adult day health care (1475 Quintana Road)
- Del Mar Elementary School (501 Sequoia Street)
- A retirement home (2910 Cedar Avenue)
- Montessori School (600 Quintana Road)
- A retirement home (537-A Piney Way)
- A social service facility (445 Chorro Creek Road)

EXPANSION OR REPLACEMENT OF THE EXISTING FACILITY

The term "expansion" is used throughout the CLUP in reference to energy facilities associated with the project property. Definition of the term is important because the CLUP places a limit on expansion in General Policy 5.0, and the CLUP text (but not policy) suggests that expansion of energy facilities triggers the need for a CLUP amendment (Sheppard, Mullin, Richter and Hampton, 2001).

Staff concludes that the proposed project, is a "replacement" or "modernization" of the existing MBPP, consistent with the definition of a "modification of an existing facility" per the Warren-Alquist Act. The City has concurred that the proposed project is not an "expansion" (Sheppard, Mullin, Richter & Hampton, 2001).

Additional information relative to the proposed project's consistency with the City's applicable land use plans and ordinances, and the Energy Commission's pre-emption thereof, is provided below in the LORS compliance subsection under the General Plan, CLUP, and Zoning Ordinance discussions.

IMPACTS

According to Appendix G of the Guidelines to the California Environmental Quality Act (CEQA), a project may have a significant effect on land use if a proposed project would:

- Conflict with any applicable land use plan, policy, or regulation of an agency with jurisdiction over the project adopted for the purpose of avoiding or mitigating an environmental effect;

- Disrupt or divide the physical arrangement of an established community.

- Convert Prime Farmland, Farmland of Statewide Importance, or Unique Farmland to non-agricultural use.

A project may also have a significant impact on land use if it would create unmitigated noise, dust, public health hazard or nuisance, traffic, or visual impacts or when it precludes or unduly restricts existing or planned future uses.

COMPLIANCE WITH LAWS, ORDINANCES, REGULATIONS AND STANDARDS

Public Resources Code § 25525 states that the Energy Commission shall not certify any facility when it finds "that the facility does not conform with any applicable state, local, or regional standards, ordinances, or laws, unless the [Energy] commission determines that such a facility is required for public convenience and necessity and that there are not more prudent and feasible means of achieving such public convenience and necessity."

When determining if a project is in conformance with state, local or regional ordinances or regulations, the Energy Commission typically meets and consults with applicable agencies to determine conformity and, when necessary, "to attempt to correct or eliminate any noncompliance" (§ 25523(d)(1)). The laws, ordinances, regulations, standards (LORS) and policies applicable to the project have been analyzed below to determine the extent to which the MBPP is consistent or at variance with each requirement or standard.

CALIFORNIA COASTAL ACT (PUB. RESOURCES CODE § 30000 ET. SEQ.)

Pursuant to Public Resources Code §30413(b) of the Coastal Act, the Coastal Commission shall "designate those specific locations within the Coastal Zone where the location of a facility, as defined in § 251101, would prevent the achievement of the objectives of this division; provided, however, that specific locations that are presently used for such facilities and reasonable expansion thereof shall not be so designated." A "partial designation" may be given to areas where power plant siting is deemed unsuitable but underground facilities, such as cooling water conduits are permitted (City of Morro Bay, 2000b).

The proposed modernization would be located entirely within the existing project site. Consequently, the project is consistent with Coastal Commission policy that prefers onsite expansion of existing power plants to development of new power plants in currently undeveloped areas of the Coastal Zone.

---

1 “Facility” is defined as a thermal power plant or electric transmission line regulated according to provisions of Division 15 of the Public Resources Code (i.e., Warren-Alquist Act).

SUBDIVISION MAP ACT (PUB. RESOURCES CODE § 66410-66499.58)

Both properties associated with the proposed MBPP are in compliance with the requirements of the State Subdivision Map Act.

STATE TIDE AND SUBMERGED LANDS LEASING (PUB. RESOURCES CODE § 6701-6706)

The existing facility's Outfall Agreement will expire on November 15, 2004. To continue operation under the proposed project, a new Outfall Agreement will be required. The Outfall Agreement is administered by the City on behalf of the State Lands Commission.

The City and Applicant have developed and agreed to an MOU for the proposed project. The MOU is not a legally binding document. However, the MOU states that a Development Agreement, which is a legally binding agreement, is to implement the terms of the MOU. The Development Agreement is the "Agreement to Lease" currently being negotiated.

The MOU addresses the Outfall Agreement and the need for its renewal. Specifically, the MOU addresses the term of the Agreement, default provisions and the amount of rent:. The current Outfall Agreement between Duke and the City has an expiration date of November 15, 2004.

Assuming that the Applicant and City are successful in negotiating a new Outfall Agreement, the proposed project would be in compliance with State requirements for the leasing of tide and submerged lands. To ensure project compliance with these requirements and Public Resource Codes § 6701-6706, a proposed condition of certification requiring the applicant to acquire a new Outfall Agreement prior to November 15, 2004 has been incorporated by Staff, see **LAND-1.**

LOCAL

CITY OF MORRO BAY GENERAL PLAN

The following sections provide an analysis of the proposed project's consistency with the City's adopted General Plan. The City additionally has an adopted CLUP certified by the Coastal Commission. In several instances the Policies and Programs of the City's General Plan are duplicative of the CLUP. To avoid redundance, the consistency analysis of the CLUP indicates the General Plan's Policies and Programs that are identical.

LAND USE, OPEN SPACE AND CONSERVATION ELEMENTS

<u>Industrial and Energy Related Development</u>: The objective of this Chapter is to protect the City against any of the potential adverse impacts associated with energy development.

Implementation of the conditions of certification associated with this PSA will minimize potential adverse impacts associated with the proposed project to the maximum extent feasible.

Program LU-39: Industrial uses located on or adjacent to the harbor and beaches shall be regulated to protect the environment and priorities shall be established for coastal-dependent land uses.

Program LU-40: Measures shall be taken by the City to protect against potential adverse environmental impacts created by energy development.

Under the City's Land Use Map, which serves as the combined map for the General Plan and CLUP, the MBPP property as a whole is designated Coastal Development Industrial with Planned Development, and includes Interim Open Space Uses in Industrial Categories and Environmentally Sensitive Habitat overlays (Sheppard, Mullin, Richter & Hampton, 2001, Duke, 2000a)). City attorneys have determined that, within the context of the City's land use planning and zoning documents, Coastal-Dependent Industrial and Coastal Development Industrial are synonymous (Sheppard, Mullin, Richter & Hampton, 2001). The CLUP establishes priorities for property designated Coastal-Dependent Industrial.

Protection of environmental resources for the proposed project will result from proposed design plans and implementation of the conditions of certification associated with this PSA.

Objective: Ensure that the delicate balance of the environment is not upset and that urbanization takes place only if protection of the environment can be guaranteed.

The proposed project will not encroach upon sensitive lands or open space. Through implementation of the conditions of certification associated with this PSA, necessary environmental protection and/or mitigation will occur.

Program LU-54: Development along the shoreline and open seas shall be consistent with the requirements of the Coastal Act.

Program LU-54.1: Construction of shoreline structures that would substantially alter existing landforms shall be limited to projects necessary for: protection of existing development; new development must ensure stability without depending on shoreline protection devices; public recreation areas; other coastal-dependent uses. Shoreline structures include revetments, breakwaters, groins, harbor channels, seawalls, cliff-retaining walls, and other structures that alter natural shoreline processes.

The proposed project does include modification to the existing seawater intake structure locate in Morro Bay Harbor, but does not involve the construction of any new shoreline structures that would substantially alter existing landforms. Modifications to the seawater intake structure would be consistent with the Coastal Act.

Policy LU-55: All Environmentally Sensitive Habitat areas shall be protected against adverse impacts to the maximum extent feasible.

Within the City's General Plan, the existing MBPP property includes an Environmentally Sensitive Habitat overlay designation. As part of project design, the Applicant has committed to avoiding Environmentally Sensitive Habitat areas by: locating power block structures outside of the 100-feet buffer zones for these areas; using directional drilling for the natural gas pipeline intertie; placing a sound wall along the northern berm to reduce project-related noise impacts on wildlife that may use such areas; and, placing the footings of the proposed Morro Creek bridge outside of the creek's riparian zone. Please see the ***TERRESTRIAL BIOLOGY*** *section of the PSA for additional mitigation measures for the protection of Environmentally Sensitive Habitat areas.*

Policy LU-62: Development of the harbor and beach areas should preserve, protect and enhance the use of these natural resources for the public.

Program LU-62.1: All developments at or adjacent to the harbor or beach areas shall provide for physical and visual public access to these features.

The proposed project does not include any new development within the harbor or along the beach. The project does propose to modify the existing seawater water intake structure located in the harbor. This modification includes a new facade that would reflect a "fishing village" architecture, thereby enhancing the overall visual quality of the harbor. Additionally, the proposed project includes replacement of the 450-feet exhaust stacks of the existing facility with 145-feet stacks which would reduce existing project-related visual impacts. Please see the ***VISUAL RESOURCES*** *section of the PSA for a detailed evaluation.*

The proposed project also includes the purchase of the "Den Dulk" property, new bike baths, extension and re-alignment of the Embarcadero and extension of Coleman Drive and, a bridge over Morro Creek to facilitate and enhance public access and provide an open space to the harbor and coast.

Policy LU-77: Mixed Use Area H: Within this area, uses allowable under any of the applicable land use and zoning designations are encouraged as primary uses of the area. Open Space uses or commercial fishing support facilities may be proposed whether singly or in a mixed use pattern.

The "Den Dulk" property is designated Mixed Use Area H (Duke, 2000a). The Applicant proposes is purchasing the property which would improve coastal access and provide a buffer between the new facility and public uses.

CIRCULATION ELEMENT

Policy C-37: Potential hazard and environmental problems caused by oil and gas pipelines should be reduced to the lowest level feasible.

Program C-37.1: The owners of all oil and gas pipelines should be responsible for continual inspections, maintenance and replacement of their pipelines. Conditions which may lead to leaks or spills should be eliminated. Lines should be replaced when it is expected that corrosion may be sufficient to result in leak or spill. New lines should be corrosion resistant.

Program C-37.5: Pipeline routes should be selected so that grading and removal of native vegetation is minimized and that Environmentally Sensitive Habitats are avoided.

Program C-37.8: All new pipeline support facilities should be constructed underground when feasible. Existing pipelines should be buried as a condition of any development permits.

The proposed project includes the use of existing gas pipelines, as well as the construction of one new high pressure pipeline intertie to connect the proposed facility with the existing PG&E high pressure gas manifold system. The new pipeline will be located underground and will be bored under Willow Camp Creek to avoid impacts to Environmentally Sensitive Habitat. The Applicant has committed to implementing additional mitigation measures to restore any wetland or stream/riparian vegetation disrupted as a result of construction (Duke, 2000a). Please refer to the ***TERRESTRIAL BIOLOGY*** *section of the PSA for additional information regarding the creek.*

The construction, operation and maintenance of all facility-related pipelines will meet existing federal, state and local standards and management practices to minimize potential impacts. Please see the ***FACILITY DESIGN*** *section of the PSA for additional information regarding the new and existing pipelines.*

CITY OF MORRO BAY COASTAL LAND USE PLAN

CHAPTER III: SHORELINE ACCESS AND RECREATION

Policy 1.17: When PG&E property is needed for coastal-dependent industrial uses, a vertical (east-west) public access path for pedestrians and bicyclists no less than 10 feet in width shall be required as a condition of development, consistent with public safety needs and the need to protect the operations of the new facilities. A location paralleling the creek shall be allowed, provided the path does not encroach into Environmentally Sensitive Habitat areas or buffer zones. (General Plan Policy AR-18)

Policy 1.20: In reviewing the development proposals along the bay front, the City shall apply the following standards and make the necessary findings to assure consistency with LUP and Chapter 3 Coastal Act Policies:

Each application for a new development or lease which would result in an increase in intensity of use, change of use, or expansion of an existing structure seaward or an increase in height shall include a physical provision for continuous lateral access along the bay front portion of the parcel. Each applicant for

development as defined in part (1) above shall be required to provide lateral access unless the applicant can demonstrate based on engineering analysis that all or a portion of such access is physically infeasible and there are no design alternatives capable of overcoming topographical or site constraints that jeopardize public safety and fragile coastal resources.

Applications for coastal-dependent development where provisions of continuous lateral access would conflict with daily operations of the facility shall be conditioned by the City to make maximum provisions for public viewing areas and/or walkways in suitable locations on the development site. (General Plan Policy AR-20).

The proposed project includes the development and improvement of three segments of a bike and pedestrian path around the project property, a pedestrian/bicycle bridge of Morro Creek, and a new east-west bike path between Highway 1 and the Embarcadero. The proposed bridge design will span the creek with its footings outside of Environmentally Sensitive Habitat areas or their related buffer zones.

The proposed project additionally includes re-alignment of the Embarcadero and Coleman Drive to reflect design plans in the City's Waterfront Master Plan and "Waterfront Boardwalk and Circulation Improvements – Project Feasibility Study" (City of Morro Bay, 2000c). Please see the ***TRAFFIC AND TRANSPORTATION*** *section of the PSA for additional information regarding issues associated with the re-alignments.*

CHAPTER VII: ENERGY/INDUSTRIAL DEVELOPMENT

D. Existing Industrial and Energy Related Developments: This section of the CLUP inventories the existing industrial and energy related activities and facilities within the Coastal Zone, as well as proposed plans to expand or modify these facilities. Figure 14 of the CLUP shows the location of these facilities. It must be realized that due to the dynamics of the energy situation, projecting energy demands and the necessary facilities over a long period is extremely difficult. Currently, none of the facilities discussed here are projecting expansion and when such expansions would be proposed, they will require an amendment to the Coastal Plan.

The term "expansion" is used throughout the CLUP in reference to energy facilities associated with the project property. Definition of the term is important because the CLUP places a limit on expansion in General Policy 5.0, and the CLUP text (but not policy) suggests that expansion of energy facilities triggers the need for a CLUP amendment (Sheppard, Mullin, Richter and Hampton, 2001).

As addressed in the LORS compliance subsection under the Warren-Alquist Act discussion, none of the City's planning documents define the term "expansion." The Coastal Act does not define the term either.

For the purposes of the City's CLUP, it has been suggested by City attorneys that the term "expansion" may be best understood by reviewing a description of the "long range expansion plans" for the project site as originally envisioned in the CLUP (Sheppard, Mullin, Richter and Hampton, 2001). The CLUP states that "long range expansion plans for this facility include the construction of two additional steam turbine generators to the existing four generators [sic]. This addition would involve the construction of two additional exhaust stacks plus additional facilities for cooling the ocean water. One additional generator would cause the discharge water to rise about [sic] allowable levels. This would require additional cooling towers to bring the water back to an allowable temperature for discharge."

"Expansion," at the time the CLUP was adopted, referred to an in-kind addition to what was already located at the project site. If PG&E wanted to produce more power, it would have had to construct cooling towers and more exhaust stacks. Expansion did not mean a reduction in square footage, height or mass, nor did it refer to a reduction in the on-site area used for energy development (Sheppard, Mullin, Richter and Hampton, 2001).

Depending on the construction schedule, construction of the proposed facility may temporarily expand the overall facility size until the existing facility is demolished. Total developed square footage, the overall footprint of the developed property on the site, and overall building mass would increase if the two facilities were side-by-side for any given period of time. While temporary, simultaneous operation of both the existing project and the proposed project could effectively constitute an "expansion," a limited period of time is not intended to be covered by either the plain meaning of the term "expansion" or as the term is used throughout the CLUP (Sheppard, Mullin, Richter and Hampton, 2001). If, however, the existing project and the proposed project are operated simultaneously (with seven functioning exhaust stacks) or if both facilities occupy the property for an extended period of time, it would constitute an "expansion" as that term is used in the CLUP.

The proposed project's "Project Description," as analyzed for the purposes of this PSA and, ultimately, the Energy Commission's certification, requires demolition of the existing facility. Demolition of the existing facility will also likely be required by the City as part of the Development Agreement entered into with the Applicant. As such, long-term simultaneous operation of the two facilities cannot occur without subsequent environmental review and approvals. Also, many other sections of CLUP/GP appear to anticipate this type of project without need for amendments. Only one section doesn't; it is in consistent with the others.

The proposed facility would generate an additional 198 MW of power in comparison to the existing facility. There is nothing in the City's planning documents, including the CLUP, General Plan and Zoning Ordinance that would lend support to an interpretation of the term "expansion" to include or refer to an increase in generating capacity only. The new facility would have fewer physical impacts than the existing facility. Interpreting the term "expansion" to include an increase in generating capacity, without a corollary increase in physical

proportions of the facility and an increase in physical impacts, is inconsistent with the manner in which the term is used throughout the CLUP (Sheppard, Mullin, Richter and Hampton, 2001). Consequently, the proposed project is not an "expansion" and would not be in conflict with the CLUP or require an amendment to it.

<u>California Energy Commission Feasibility Report</u>: According to a Energy Commission report entitled "Feasibility of Expansion of Existing Coastal Zone Power Plants," the [existing] power plant site is the minimal area adequate for expansion of small facilities whose location would not further affect the unique view corridor of Morro Rock; the report indicates that conversion is unfeasible due to a variety of factors. The study does conclude that expansion is feasible for a small-scale facility utilizing either steam turbine, the existing generating system, combined cycle, or combustion.

The referenced Energy Commission report concluded that an increase in generating capacity of less than 400MW constituted a "small" project (Duke, 2000a). The proposed project would only increase the existing facility's capacity by 198MW. Additionally, removal of the existing 450-feet exhaust stacks will improve view corridors of Morro Rock.

<u>Policy 5.01</u>: The City shall designate the existing PG&E parcel and the Chevron pier parcel as coastal-dependent industrial uses. Any proposals for energy development industrial uses within zones designated for general industrial development will require an amendment to the land use plan consistent with section 30515 of the Coastal Act. Power Plant expansion on PG&E owned property shall have priority over other coastal-dependent industrial uses. Power Plant expansion shall be limited to small facilities whose location would not further affect the views of Morro Rock from State Highway 1 and high use visitor-serving areas, consistent with Policy 12.11. (General Plan Policy LU-39.1).

<u>Policy 5.04</u>: In the areas designated for industrial uses, coastal-dependent uses shall have priority over non-coastal-dependent uses. (General Plan Program LU-39.4)

Under the City's Land Use Map, which serves as the combined map for the General Plan CLUP, the MBPP property as a whole is designated Coastal Development Industrial with Planned Development, and includes Interim/Open Space Uses in Industrial Categories and Environmentally Sensitive Habitat. The term Coastal Development Industrial is not defined in the General Plan, CLUP or City Zoning Ordinance (it appears in the legend of the Land Use Map only); however, Coastal-Dependent Industrial is defined in all of the City's land use planning documents. As previously noted, attorneys for the City have determined that, for the purposes of the City's land use planning documents, Coastal-Dependent Industrial and Coastal Development Industrial are synonymous (Sheppard, Mullin, Richter and Hampton, 2001).

The proposed project would not be designated General Industrial; it would remain Coastal Development Industrial, and therefore, would not require an

amendment to the CLUP or General Plan. As indicated above, the "modernization" or "expansion" is considered "small" per the Energy Commission's "Feasibility of Expansion of Existing Coastal Zone Power Plants" report (i.e. less than 400 MW capacity increase), and would enhance viewsheds of Morro Rock through removal of the existing 450-foot exhaust stacks.

Policy 5.06: The routing of any pipelines and transmission lines shall utilize whenever possible existing pipeline or transmission corridors. (General Plan Program LU-40.2).

Policy 5.07: Except for those pipelines and transmission lines exempted from the coastal development permits under § 30610 (d) and (f) of the Coastal Act as defined by the State Coastal Zone Conservation Commission's interpretive guidelines adopted September 5, 1978, the City shall review and approve all proposed plans for the expansion of transmission lines and pipelines in and through City boundaries. (General Plan Program LU-40.3).

Policy 5.08: The City shall require that new pipelines and transmission lines are installed with suitable mitigation measures such as erosion control, revegetation, and other measures necessary to protect all scenic resources and habitat values. (General Plan Program LU-40.4).

The proposed project will use existing transmission lines and natural gas pipelines. The proposed project does include the construction of one on-site high pressure pipeline intertie to connect the proposed facility to the existing PG&E high pressure gas manifold system. To avoid impacts to Willow Camp Creek the line will be bored under the creek. The Applicant has committed to implementing additional mitigation measures to restore any wetland or stream/riparian vegetation disrupted as a result of construction (Duke, 2000a). The applicant is required to obtain a streambed alteration permit from the California Department of Fish & Game. Please refer to the ***TERRESTRIAL BIOLOGY*** *section of the PSA for additional information regarding the creek.*

The Coastal Act states that "Notwithstanding any provision in this division to the contrary, no coastal development permit shall be required pursuant to this chapter for the following types of development and in the following areas... (f) the installation, testing and placement in service or the replacement of any necessary utility connection between an existing service facility and any development approved pursuant to this division; provided however, that the [Coastal] Commission may, where necessary, require reasonable conditions to mitigate any adverse impacts on coastal resources, including scenic resources" (§ 30610) The proposed intertie pipeline is such a connection and, therefore, is exempt from requiring a CDP.

Policy 5.11: Due to the presence of sensitive wetlands and endangered species habitat and the City's status as a Bird Sanctuary, the City will advocate that the Coastal Commission change the recommendations of its Power Plant Siting Study to designate all areas within City limits, except the site presently occupied by the PG&E Power Plant, as unsuitable for power plant siting, and designate the City's

primary coastal-dependent permitted use as commercial fishing and recreation. (General Plan Policy LU-40.7).

The proposed project will be constructed and operated within the existing facility's property boundaries, which is designated Coastal Development Industrial with Planned Development, and includes Interim/Open Space Uses in Industrial Categories and Environmentally Sensitive Habitat area overlays.

Temporary construction lay-down/staging areas, construction of the proposed bike paths, bridge over Morro Creek, and re-routing of the Embarcadero and Coleman Drive will be located off site. These project components do not constitute a "power plant" within the context of the CLUP or Power Plant Siting Study, and therefore, are suitable for development at their proposed location.

The proposed project will not preclude the City from advocating that the Coastal Commission change its existing recommendations for power plant siting designations within the City.

Policy 5.20: Any expansion of the PG&E power plant shall give priority to the options that would best utilize available on-site space. Additionally, no dunes areas should be disrupted unless there is no other less environmentally damaging alternative. PG&E shall contribute to the dunes stabilization program and reimburse their pro rata share of any Coastal Conservancy (or City) expenditure for dune stabilization in this area. (General Plan Policy LU-40.15).

As addressed above, the project is not considered an "expansion" of the existing facility, but rather a "modernization" or "replacement" project and will be located entirely within the property boundaries of the existing facility. The least disruptive location identified for the construction road is through grasslands and an existing dirt road; this route avoids dune scrub habitat. Please refer to the ***TERRESTRIAL BIOLOGY*** *section of the PSA for additional information regarding dune scrub habitat.*

Policy 5.21: As a condition of any expansion of the PG&E power plant, the City will require substantial landscaping and screening to mitigate the visual impacts of existing and future facilities, with particular emphasis on screening the facilities located between the power plant and Highway 1. (General Plan Policy LU-40.16).

Please refer to the ***VISUAL RESOURCES*** *analysis of the PSA for information for proposed facility screening and landscaping.*

Policy 5.22: The City shall insist that the present operation and any further expansion of the PG&E Plant conform to the standards of the Federal and State pollution control requirements and emission levels be maintained. (General Plan Policy LU-40.17).

Please refer to the ***AIR QUALITY****,* ***WASTE MANAGEMENT****,* ***HAZARDOUS MATERIALS HANDLING****, and* ***PUBLIC SAFETY*** *analyses of the PSA for*

information regarding compliance with pollution control requirements and emission levels and controls.

HAZARDS

Policy 9.03: All development, including construction, excavation and grading, except for flood control projects and agricultural uses shall be prohibited in the 100-year floodplain areas unless off-setting improvements in accordance with HUD regulations are required. Development within floodplain areas shall not cause further stream channelization, alignment modifications, or less riparian habitat values consistent with § 30236 of the Coastal Act. Permitted development shall be consistent with all applicable resources protection policies contained in the Coastal Act and City Land Use Plan.

The Land Use Map shall designate the flood prone lands as the western limits of the Morro and Chorro Valleys for agricultural use.

Development in the flood prone areas within the City shall include finished floor elevations two feet above the 100-year flood elevation. The heights of permitted development shall be compatible with the character of the surrounding areas and not conflict with scenic and visual qualities. (General Plan Program S-4.1).

Portions of the project property fall within the 100-year floodplain of the lower reaches of Morro Creek. The Applicant has committed to either design modifications or modification of adopted flood control maps, as necessary, to comply with federal, state and local flood-related programs and statutes. Please refer to the ***SOILS AND WATER*** *section of the PSA for additional information regarding FEMA compliance.*

ENVIRONMENTALLY SENSITIVE HABITAT AREAS

Policy 11.01: Environmentally Sensitive Habitat areas shall be protected against any significant disruption of habitat values, and only uses dependent on such resources shall be allowed within such areas. The City shall either prepare a wetlands/estuarine map or, if funding does not permit such preparation, adopt the National Wetland Inventory by U. S. Fish and Wildlife Service dated 1979, as the mapping illustration of the wetland and estuarine areas contained within the City boundaries. If the City adopts the National Wetlands Inventory Mapping as their LUP [Land Use Plan] wetlands habitats and types, all proposed development located within 100 feet of the mapped wetland boundaries shall be required to submit additional mapping based on U. S. Fish and Wildlife and Coastal Commission Statewide Interpretive Guidelines done by a qualified biologist. The additional mapping will be submitted for review and approval from U. S. Fish and Wildlife and the California Department of Fish and Game. After public agency approval has been obtained, the City shall define buffer areas except where biologists identify the need for a greater buffer to protect the overall wetland system or a particular resource. Developments permitted within wetland and/or buffer areas are limited to uses listed in § 30233(c) of the Coastal Act. (General Plan Program LU-55.1).

The proposed project has been designed to avoid the 100-feet buffer zones of designated Environmentally Sensitive Habitat areas within and adjacent to the project site. The proposed natural gas intertie pipeline will be bored under Willow Camp Creek to avoid impacts to this area. The proposed bridge over Morro Creek has been designed with footings outside of wetland/riparian habitat.

Environmentally Sensitive Habitat areas were identified and delineated in the field by Dr. Terry Huffman of the Huffman-Broadway Group, Inc. following applicable provisions of the California Coastal Act of 1976 and the California Code of Regulations regarding how boundaries for wetlands, streams, estuaries, tidelands, submerged lands, public trust lands and beaches are defined (Duke, 2001a). The technical details as to how these boundaries were identified and, if present, delineated are provided on pages 7, 8 and 9 of the report entitled "Investigation of the Presence of Areas Subject to U.S. Army Corps of Engineers, California Coastal Commission, and California Department of Fish and Game Jurisdiction Within the Proposed Morro Bay Power Plant Project Area, City of Morro Bay, San Luis Obispo County, California." This report was provided as part of the AFC (see AFC, Volume III, "Technical Appendices," Appendix 6.6B-3). In the case of dune habitat, the general description provided by the City of Morro Bay Local Coastal Program was followed (Duke, 2001a).

Associated buffers were determined by first locating the geographic limits of the various Environmentally Sensitive Habitat areas identified in the field, and then geo-referencing the location of each Environmentally Sensitive Habitat area boundary on to a USGS topographic base map with the aid of a combination of GPS mapping and interpretation of aerial photography. Environmentally Sensitive Habitat area buffers were drawn based on the above-mentioned guidelines using an "ARCVIEW" buffer drawing tool starting at the boundary of the delineated ESH area (Duke, 2001a).

Please refer to the **TERRESTRIAL BIOLOGY** section of the PSA for additional information regarding these project features.

Policy 11.02: Development in areas adjacent to Environmentally Sensitive Habitat areas and parks and recreation areas shall be sited and designed to prevent impacts which would significantly degrade such areas, and shall maintain the habitats' functional capacity. (General Plan Program LU-55.2).

The proposed project and related features have been designed to minimize impacts to Environmentally Sensitive Habitat areas. The Applicant has worked with the City to establish project design that meet the goals of the City's policies and programs addressing Environmentally Sensitive Habitat areas and recreational opportunities.

Policy 11.04: No land division shall be allowed in the Environmentally Sensitive Habitat areas of wetlands, sand dunes, stream beds and endangered wildlife habitats as designated on Figures 6 and 28, unless the land division is for the express and sole purpose of transferring the property to a public management

agency or for some other bonafide conservation purpose. (General Plan Program LU-55.3).

*The Applicant has stated that the proposed project does not involve any land division that will affect Environmentally Sensitive Habitat areas (Duke, 2000a). Please refer to the **TERRESTRIAL BIOLOGY** section of the PSA for additional information regarding these project features.*

Policy 11.05: Prior to the issuance of a Coastal Development Permit, all projects and parcels containing Environmentally Sensitive Habitat as depicted on the Land Use Map, or habitat map included within the LUP and on the adopted U. S. Fish and Wildlife Wetland Inventory Map, or projects or parcels within 250 feet of all designated areas (except wetland where projects on parcels within 1,000 feet is the criterion), or projects having the potential to affect an Environmentally Sensitive Habitat areas must be found to be in conformity with the applicable habitat protection policies of the LUP. All development plans, grading plans, etc., shall show the precise location of the habitat(s) potentially affected by a proposed project. Projects which could adversely impact an Environmentally Sensitive Habitat area shall be subject to adequate environmental impact assessment by a qualified biologist(s).

Projects which could adversely impact an Environmentally Sensitive Habitat area shall be subject to adequate environmental impact assessment by a qualified biologist(s). In areas of the City where sensitive habitats are suspected to exist but are not presently mapped or identified in the City's LUP, projects shall undergo an initial environmental impact assessment to determine whether or not these habitats exist. Where such habitats are found to exist, they shall be included in the City's Environmentally Sensitive Habitat mapping included within the LUP. (General Plan Policy LU-55.4).

*Environmentally Sensitive Habitat areas have been mapped by the Applicant per the methodology described above, under the discussion for CLUP Policy 11.01. The **TERRESTRIAL BIOLOGY** section of the PSA provides a detailed analysis of these resources, identifies mitigation measures necessary for their protection, and establishes LORS compliance conclusions specific to biological resources.*

Policy 11.06: Buffering setback areas a minimum of 100 feet from sensitive habitat areas shall be required. In some habitat areas setbacks of more than 100 feet shall be required if environmental assessment results in information indicating a greater setback area necessary for protection. No permanent structures shall be permitted within the setback area except for structures of a minor nature such as fences or at-grade improvements for pedestrian or equestrian trails. Such projects shall be subject to review and comment by the California Department of Fish and Game prior to commencement of development within a setback area. For other than wetland habitats, if subdivision parcels would render the subdivided parcel unusable for its designated use, the setback area may be adjusted downward only to a point where designated use is accommodated but in no case is the buffer to be less than 50 feet. The lesser setback shall be established in consultation with the Department of Fish and Game. If a setback area is adjusted downward mitigation

measures developed in consultation with the Department of Fish and Game shall be implemented. (General Plan Program LU-55.4).

The proposed project's design includes buffer setbacks agreeable to the City, and the Applicant has indicated that it has begun necessary consultations with appropriate federal and state agencies with jurisdictional authority over these resources (Duke, 2001a). No permanent power generating structures will be located in buffer areas except for the construction road that will eventually be converted into a bike/pedestrian path and the existing levees on the north, west, and east sides of the project property. A sound wall will be installed on top of the northern berm that will decrease noise impacts on wildlife using the Environmentally Sensitive Habitat areas associated with Morro Creek. The proposed bridge over Morro Creek has been designed with support structures outside of sensitive stream/riparian habitat. Please refer to the ***TERRESTRIAL BIOLOGY*** *section of the PSA for additional information regarding Environmentally Sensitive Habitat areas.*

Policy 11.10: Only native vegetation shall be planted in the habitat areas of rare or endangered species. Where feasible, use of drought tolerant plants of a native variety shall be used in Coastal Zone areas. (General Plan Policy 55.7).

Please refer to the ***TERRESTRIAL BIOLOGY*** *Section of the PSA for additional information regarding revegetation.*

Policy 11.14: A minimum buffer strip along all streams shall be required as follows: (1) a minimum buffer strip of 100 feet in rural areas; (2) a minimum buffer strip of 50 feet in urban areas. If the applicant can demonstrate that the implementation of the minimum buffers on previously subdivided parcels would render the subdivided parcel unusable for its designated use, the buffer may be adjusted downward only to a point where the designated use can be accommodated, but in no case shall the buffer be reduced to less than 50 feet for rural areas and 25 feet for urban areas. Only when all other means to project modifications are found inadequate to provide for both the use and the larger minimum buffer. The lesser setback shall be established in consultation with the U. S. Fish and Wildlife and the California Department of Fish and Game and shall be accompanied by adequate mitigations. The buffer area shall be measured landward from the landward edge of riparian vegetation or from the top of the bank (e.g., in channelization streams). Maps and supplemental information may be required to determine these boundaries. (General Plan Program LU-55.8).

All power generating structures will be placed outside of the 100 feet buffer areas for Environmentally Sensitive Habitat areas. The existing berms will be retained for flood protection. Project design additionally includes a sound wall to buffer noise impacts to wildlife within the Environmentally Sensitive Habitat areas associated with Morro Creek. The footings of the proposed bridge over Morro Creek have been designed to avoid stream/riparian habitat. The Applicant has indicated that it has begun necessary consultations with appropriate federal and state agencies with jurisdictional authority over these resources (Duke, 2001a).

*Please refer to the **TERRESTRIAL BIOLOGY** section of the PSA for a detailed analysis of these resources.*

Policy 11.15: No structures shall be located within the stream corridor except: public trails located within a buffer when no alternative location is feasible but outside of riparian habitat; flood control project where no other method for protecting existing structures in the floodplain is feasible and where such protection is necessary for public safety or to protect existing development; and development where the primary function is the improvement of fish and wildlife habitat. Bridges (when support structures are located outside the critical habitat areas) may be permitted when no alternative route/location is feasible. All development shall incorporate the most protective mitigations feasible. (General Plan Program LU-55.10).

*The proposed bridge over Morro Creek is intended to improve public circulation and coastal access. The bridge, as sited and designed, is the least damaging alternative because it links existing dirt roads and avoids dune scrub habitat. Additionally, the bridge footings will be placed outside of stream/riparian habitat, and the Applicant has committed to incorporating the most protective mitigation feasible (Duke, 2000a). Please refer to the **TERRESTRIAL BIOLOGY** section of the PSA for a detailed analysis of these resources and identified mitigation measures to minimize potential impacts.*

Policy 11.16: All permitted development, including dredging, filling, and grading within streambeds and setback buffer areas shall be limited to activities necessary for the construction of uses specified in Policy 11.15. When such activities require removal of riparian plant species, revegetation with local native riparian species shall be subject to review and comment by U. S. Fish and Wildlife Service and the Department of Fish and Game. (General Plan Program LU-55.11).

*The proposed project features will comply with the City's buffer zone requirements. The proposed bridge over Morro Creek is allowable under CLUP Policy 11.15. Native plants will be used for revegetation and the Applicant has committed to selecting appropriate revegetation species in consultation with the U. S. Fish and Wildlife Service and Department of Fish and Game (Duke, 2000a). Please refer to the **TERRESTRIAL BIOLOGY** section of the PSA for additional information regarding revegetation.*

Policy 11.17: The biological productivity of the City's Environmentally Sensitive Habitat areas shall be maintained and, where feasible, restored through maintenance and enhancement of the quality and quantity of Morro and Chorro groundwater basins and through prevention of interface with surface water flow. Stream flows adequate to maintain riparian and fisheries habitat shall be protected. (General Plan Program LU-55.12)

*Please refer to the **TERRESTRIAL BIOLOGY, MARINE BIOLOGICAL RESOURCES** and **WATER RESOURCES** sections of the PSA for information regarding groundwater and surface water and their associated affects on habitat.*

Policy 11.18: No vehicle traffic shall be permitted in wetlands and pedestrian traffic shall be regulated and incidental to the permitted uses. New development adjacent to wetlands shall not result in adverse impacts due to additional sediment, runoff, noise, and other disturbances. (General Plan Policy LU-55.14).

The proposed project features will allow only limited pedestrian traffic within wetland areas that is regulated and incidental to the permitted use. The project will not result in significant adverse impacts to Environmentally Sensitive Habitat areas or wetlands. Please refer to the ***TERRESTRIAL BIOLOGY*** *section of the PSA regarding potential impacts to wetlands and mitigation measures to minimize them to the extent feasible.*

Policy 11.20: Coastal dune habitats shall be preserved and protected from all but resource-dependent, scientific, educational and passive recreational use. Disturbance or destruction of any dune vegetation shall be prohibited, unless no feasible alternative exists, and then only if revegetation is made a condition of project approval. Such revegetation shall be consistent with native plants propagated from the disturbed sites or from the same species at adjacent sites. (General Plan Program LU-58.2).

Policy 11.21: All non-authorized motor vehicles shall be prohibited in beach and dune areas. A buffer strip, a minimum of 50 feet in width in urban areas, and 100 feet in non-urban areas shall be maintained between the dune habitat and adjacent development. All permitted uses shall be regulated and restrictions enforced to protect critical bird habitats during breeding and nesting seasons. Controls may include restriction of access, noise abatement, restriction of hours of operations of public or private facilities. For all permitted uses within dune habitat areas, including recreation, foot traffic on vegetated dunes shall be minimized. Where access through dunes is necessary or established through historical public use, well-defined footpaths or boardwalks shall be developed and used. (General Plan Program LU-57.2).

Building the proposed construction road will not disturb dune scrub habitat or critical bird habitats during breeding and nesting seasons. The proposed road has been routed within grasslands to avoid dune scrub habitat. An existing dirt road will be used for construction of the proposed bike/pedestrian path. The Applicant has committed to staking the proposed construction road by a qualified biologist to ensure avoidance of dune scrub habitat (Duke, 2000a). Motorized vehicles associated with the proposed project will be confined to the construction road. Existing buffer zones for dune scrub habitat will be maintained. Please refer to the ***TERRESTRIAL BIOLOGY*** *section of the PSA for potential impacts to dune scrub habitat and proposed mitigation measures to minimize impacts to the extent feasible.*

Policy 11.22: The precise location and thus boundary line of Environmentally Sensitive Habitat areas shall be determined based upon field study paid for by the applicant and performed by the City or City's consultants and approved by City Council and/or their appointed designees prior to the approval of development on

the site, including, but not limited to, a division of land, provision of public access, or restoration of the Environmentally Sensitive Habitat. (General Plan Policy LU-60.6).

Environmentally Sensitive Habitat areas have been mapped per the methodology described under the compliance discussion for CLUP Policy 11.01. The mapping was paid for by the Applicant and has been made available to the City for review. Details regarding Environmentally Sensitive Habitat areas are found in the ***TERRESTRIAL BIOLOGY*** *section of the PSA.*

Policy 11.23: As a condition of approval of development prior to commencement of any development, property owners/applicants shall dedicate appropriate permanent easements over portions of the property determined to be sensitive habitat, such as dunes, beach, wetlands, or riparian corridor. (General Plan Policy LU-61).

Under the Warren-Alquist Act, the Energy Commission holds exclusive siting authority over power plants greater than 50MW, and can preempt state and local land use requirements regarding their development. The Applicant has, in response to CLUP Policy 11.23, stated that "upon Energy Commission certification of this [proposed] project and Duke Energy's decision, in its sole discretion, to proceed with construction, the [proposed] project will provide a conservation easement over the Environmentally Sensitive Habitat areas that are a part of the existing MBPP site" (Duke, 2000a). To ensure consistency with CLUP Policy 11.23, Staff recommends that the Applicant be required to dedicate a permanent easement over the Environmentally Sensitive Habitat areas that are a part of the existing MBPP site as proposed in condition of certification ***LAND-2****.*

VISUAL RESOURCES

Policy 12.01: The scenic and visual qualities of coastal areas shall be considered and protected as a resource of public importance. Permitted development shall be sited and designed to protect views to and along the ocean and scenic and coastal areas, to minimize the alteration of natural land forms, to be visually compatible with the character of surrounding areas, and where feasible, to restore and enhance visual quality in visually degraded areas. New development in highly scenic areas such as those designated on Figure 31, shall be subordinate to the character of its setting. (General Plan Policy VR-2).

The existing MBPP site is designated on Figure 31 as an area of visual significance. The proposed project includes the replacement of the three existing 450-foot stacks with four 145-foot stacks, which will improve the overall scenic quality of the area. The proposed facade for the existing seawater water intake structure located at the harbor will enhance the overall character of the harbor as a "fishing village." Additionally, the new power generation facility will be located further away from the harbor thereby providing a larger viewshed of Morro Rock. Specific details regarding the visual effects of the proposed project are found in the ***VISUAL RESOURCES*** *section of the PSA.*

Policy 12.02: Permitted development shall be sited and designed to protect views to and along the coast and designated scenic areas and shall be visually compatible

with surrounding areas. Specific design criteria shall be established for the following areas: The Embarcadero (as defined in Policy 2.03); downtown commercial area.

The criteria shall include the following specific requirements and shall be applied to proposed projects on a case-by-case basis during architectural review: Building height/bulk relationship compatible with surrounding uses; landscaping to restore and enhance visually degraded areas using native and drought resistant plants and tree species; preservation and enhancement of views of the ocean, bay, sandspit and Morro Rock; and any other requirements applicable from Coastal Commission conceptual approval of the Urban Waterfront Restoration Plan. (General Plan Program VR-2.1).

Policy 12.06: New development in areas designated on Figure 31 as having visual significance shall include as appropriate the following: Height/bulk relationships compatible with the character of surrounding areas or compatible with neighborhoods or special communities which, because of their unique characteristics, are popular visitor destination points for recreation uses.

Designation of land for parks and open space in new developments which because of their location are popular visitor destination points for recreation uses. View easements or corridors designed to protect views to and along the ocean and scenic and coastal areas. (General Plan Program VR-2.2).

Policy 12.22: Industrial development shall be sited and designed in areas specifically designated in the LUP to protect views to and along the ocean and scenic coastal areas, to minimize land alteration, to be visually compatible with the character of the surrounding areas, and where feasible, shall include measures to restore and enhance visually degraded areas. In addition, industrial development shall be subordinate to the character of its setting. (General Plan Program VR-2.3).

*The **VISUAL RESOURCES** section of the PSA provides a detailed analysis of the proposed project.*

CITY OF MORRO BAY DRAFT GENERAL PLAN/COASTAL LAND USE PLAN

The current update to the General Plan/CLUP (City of Morro Bay, 2000a) has not been adopted by the City or certified by the Coastal Commission. Adoption of the new plan by the City is estimated to occur after the CEC's certification for the project. The updated General Plan/CLUP notes energy related development in several sections, including a goal and several policies specific to the existing MBPP and energy-related development. A review of the draft document was conducted in order to note if there might be any future land use non-conformity by the project with the updated plan. The majority of goals and policies identified for the updated document have been carried over from the City's currently adopted Coastal Plan and General Plan. The below referenced new goal and polices have been identified.

Goal 17 of the Land Use Element of the General Plan/CLUP is specific to energy-related development and states the City's intent to ensure "protection from adverse impacts from energy related development and promotion of appropriate energy development."

Protection of environmental resources for the proposed project will result from implementation of the design measures proposed by the Applicant and conditions of certification associated with this PSA. Promotion of appropriate energy development for the project property is achieved via the existing General Plan, CLUP land use designations, and designated zoning.

Policy LU-38: Any proposal for coastal-dependent industrial uses within zones designated for general industrial development will require an amendment to the land use plan consistent with Section 30515 of the Coastal Act.

The project property is defined as "Coastal-Development Industrial" in the City's land use planning documents and is not designated as "General Industrial." Under this policy, an amendment to the GP/CLUP would not be required.

Policy LU-39: In areas designated for industrial land uses, coastal-dependent uses shall have priority over non-coastal-dependent uses.

The proposed and existing facilities are coastal dependent in nature and take priority over non-coastal-dependent uses per the project's Coastal Development Industrial land use designation.

Policy LU-40: Due to the presence of sensitive wetlands and endangered species habitat and the City's status as a Bird Sanctuary, the City will advocate that the Coastal Commission designate all areas within the City limits except the site presently occupied by the [existing] Morro Bay Power Plant, as unsuitable for power plant siting, and designates the City's primary coastal-dependent permitted uses as commercial fishing and recreation.

The proposed project will be constructed and operated within the existing facility's property boundaries, which is designated Coastal Development Industrial with Planned Development, and includes Interim/Open Space Uses in Industrial Categories and Environmentally Sensitive Habitat. The proposed operational facility does not include plans to encroach into those areas of the City that are currently designated suitable for power plant expansion per the previously referenced Power Plant Siting Study.

Temporary construction lay-down/staging areas, construction of the proposed bike paths, the bridge over Morro Creek, and the re-routing of the Embarcadero will be located off site. These project components do not constitute a "power plant" within the context of the CLUP or Power Plant Siting Study, and therefore are suitable for development at their proposed locations under current land use planning designations and zoning.

The proposed project will not preclude the City from advocating that the Coastal Commission change its existing recommendations for power plant siting designations within the City.

Policy LU-41: The City shall participate in the biennial review of power plant locations by the Coastal Commission and make recommendations where amendments, alterations, or conditions are needed.

The proposed project will not conflict with the City's participation in the review of power plant locations by the Coastal Commission.

Policy LU-42: Expansion of the [existing] Morro Bay Power Plant shall have priority over other coastal-dependent industrial uses. Power Plant expansion shall be limited to small facilities whose location would not further affect views of Morro Rock and State Highway 1 and high use visitor-serving areas, consistent with Implementation Measure VR-5A in the Visual Resources and Scenic Highways Element.

As addressed in the LORS compliance subsection for the City of Morro Bay CLUP (Chapter VII: Energy/Industrial Development), the proposed project is a modernization and replacement project. The new project will have an increase power generation by 198 MW over the existing operating facility but physically will be smaller. The 198 MW is defined as being a "small" expansion per the Energy Commission's "Feasibility of Expansion of Existing Coastal Zone Power Plants" because it is an expansion of less than 400 MW. The proposed project would not further impact the visual quality of the City. A detailed analysis of the proposed facility's visual effects is found in the ***VISUAL RESOURCES*** *section of the PSA.*

Policy LU-43: Any expansion of the [existing] Morro Bay Power Plant shall give priorities to the options that would best utilize on-site space. Additionally, no dunes areas should be disrupted unless there is no other less environmentally damaging alternative. Morro Bay Power Plant shall contribute to the dunes stabilization program and re-imburse their pro rata share of any Coastal Conservancy (or City) expenditure for dunes stabilization in this area.

All proposed operational components of the project are located on-site, with the exception of the seawater intake structure, Outfall Area, and idle marine terminal. No adverse significant impacts to dune scrub habitat will result from the project. The ***TERRESTRIAL BIOLOGY*** *section of the PSA provides details on this habitat and the mitigation measures recommended to protect it.*

Policy LU-44: As a condition of any expansion of the [existing] Morro Bay Power Plant, the City will require substantial landscaping and screening to mitigate the visual impacts of the existing and future facilities; with particular emphasis on screening the facilities located between the power plant and Highway 1.

The proposed project would not significantly degrade the scenic quality of the City, and would improve view sheds via removal of the existing 450-foot stacks.

Details regarding facility screening are found in the ***VISUAL RESOURCES*** *section of the PSA and will comply with City policies and ordinances regarding visual resources.*

Policy LU-45: The City shall insist that the present operation and any further expansion of the [existing] Morro Bay Power Plant conform to the standards of Federal and State pollution control requirements and emission levels be maintained.

Please refer to the **AIR QUALITY, WASTE MANAGEMENT, HAZARDOUS MATERIALS HANDLING** and **PUBLIC SAFETY** sections of the PSA for information regarding compliance with pollution control requirements and emission levels and controls.

CITY OF MORRO BAY ZONING ORDINANCE

Municipal Code § 17.24.150: Thermal power plant and support facilities which must be located on or adjacent to the sea in order to function (may be allowed with the appropriate permits and licenses). A Conditional Use Permit is required. A thirty feet height limit for all new construction is required.

Municipal Code § 17.40.030(C): Permitted Uses. Subject to the granting of a Conditional Use Permit for conceptual and precise plan of development: (1) any principal or conditional use which is allowed by the primary zoning district is a permitted use.

Municipal Code § 17.40.030(D): (General Development Standards): The Standards for development within the PD Overlay Zone shall be those of the base zoning district, provided however, that the standards may be modified by the Planning Commission or City Council as they relate to: building heights; yard requirements; and minimum lot area for dwelling units in the density range provided that any specific design criteria of the General Plan and Coastal Land Use Plan, applicable to the property, is not exceeded. For those areas of the provisions of housing for the elderly or low/moderate income families, provisions of extraordinary public access, provisions for protecting Environmentally Sensitive Habitat (ESH) areas, but in all cases these provision shall meet the Coastal Land Use policies.

The existing project property is currently zoned Coastal-Dependent Industrial (M-2), with a Planned Development and Interim Open Space Industrial Use overlays. These designations are the same as under the CLUP, but have slightly different meanings under the Zoning Ordinance. M-2 is the primary zone district for the property and is defined in the Zoning Ordinance as follows: "The purpose of the Coastal-Dependent Industrial (M-2) district is to provide districts for industrial development wherein manufacturing and other industries which require a site on or close to the ocean or harbor can locate and operate while maintaining an environment minimizing offensive or objectionable noise, dust, odor or other nuisances, all well designed and properly landscaped (Municipal Code § 17.24.150).

Thermal power plants are conditionally permitted uses within the Coastal-Dependent Industrial (M-2) District. Table 17.24.150 of the Zoning Ordinance states that a conditionally permitted use is a "new or expanded use of land or a building, authorized to be constructed and/or established through the issuance of an approved conditional use permit (CUP), pursuant to Chapter 17.60" (Municipal Code § 17.12.664).

For a CUP within the Coastal Zone, the City normally proceeds with a parallel Coastal Development Permit (CDP) process. CDPs are appealable to the Coastal Commission (California Public Resources Code § 30600.5(d)). Power plants are exempt from CDP requirements pursuant to California Public Resources Code § 30600.5(a).

There are aspects of the proposed project (the Morro Creek bridge, Outfall Area, seawater intake structure, and construction road) that fall within the original jurisdiction of the Coastal Commission, but, under the Warren-Alquist Act, site certification from the Energy Commission preempts both state and local (CUP and CDP) permit authority with respect to power plant projects.

The City's Zoning Ordinance provides for a maximum structure height of 30-feet in the Coastal-Dependent Industrial district (Zoning Ordinance, Table 17.24.150). The 30-feet limit in the M-2 zone is for new construction only and does not apply to "replacement or repair of existing structures" (Zoning Ordinance, Table 17.24.150). Per the discussion under the LORS compliance subsection for the Warren-Alquist Act, the proposed project is considered to be a "replacement" or "modernization" of the existing facility, and therefore, is exempt from this requirement.

The project property is also zoned Planned Development (PD). The purpose of the PD overlay district is to "provide for detailed and substantial analysis of development on parcels which, because of their location, size or public ownership, warrant special review" (Municipal Code § 17.40.030.A). The Zoning Ordinance for the PD overlay also imposes consistency requirements: "new development projects requiring discretionary permits must be consistent with the design guidelines contained in the Waterfront Master Plan, where applicable, and with the General Plan and CLUP (Municipal Code § 17.40.030.D., E).

Development standards for projects within the PD overlay zone are those of the base zone district. The Property's base zone district is Coastal-Dependent Industrial. Building standards in the M-2/PD zone may be modified only upon approval of a finding that "greater than normal public benefits may be achieved by such deviations" (Municipal Code § 17.40.030.D). Those benefits may include improved or innovative site and architectural design, greater public or private usable open space, extraordinary public access or protection of Environmentally Sensitive Habitat areas. In all cases they must meet applicable coastal land use policies.

A conditional use within the primary zoning district may become a permitted use subject to the granting of a CUP for a Concept and/or Precise Development Plan

(Municipal Code § 17.40.030.C.1). A Concept Plan must be submitted and approved if the gross aggregate area of new development exceeds one acre (Municipal Code § 17.40.030.F). Following final approval of a Concept Plan from the City Council, a Precise Development Plan must be submitted to the Planning Commission (Municipal Code § 17.40.030.G). In addition to the "greater than normal public benefits" finding required under Municipal Code § 17.40.030.D., standard CUP findings must be made (i.e., that the proposed use is consistent with the General Plan and CLUP; that the proposed use is not detrimental to the health, safety, morals, comfort and general welfare of the persons residing or working in the neighborhood of the proposed use; and that the proposed use is not injurious or detrimental to property and improvements in the neighborhood or the general welfare of the City (Municipal Code § 17.60.030).

Municipal Code §17.48.200 requires specific findings regarding the architectural treatment and the general appearance of all proposed buildings, structures and open areas. Municipal Code §17.58.030.D.3, pertaining to coastal development located between the nearest public road and the sea or the shoreline of any body of water, requires a specific finding that such development is in conformity with the public access and public recreation policies of Chapter 3 of the California Coastal Act.

Attorneys for the City have concluded that a CUP requirement applies to thermal power plants (i.e. the proposed project) in the Coastal-Dependent Industrial zone. Two sources are referenced: (1) Table 17.24.150, which requires that thermal power plant operators obtain a CUP in order to operate; and, (2) the PD overlay requirements, which allow a conditionally permitted use to be transmuted into a permitted use by obtaining a CUP for a Concept and/or Precise Development Plan (Municipal Code § 17.40.030).

Because of the PD overlay zone requirements, the City's attorneys have concluded that an approved Concept Plan is required for the new facility because the Applicant proposes development on a lot that exceeds one acre in size (Municipal Code § 17.40.030.F). Following approval of a Concept Plan, a Precise Development Plan is required (Municipal Code § 17.40.030.G).

Subject to the granting of a CUP for a Concept Plan and/or a Precise Development Plan, the conditional use of operating a power plant becomes a permitted use (Municipal Code § 17.40.030.C). The City would have to be able to make consistency determinations concerning standard CUP findings requirements under Municipal Code §17.60.030; "greater than normal public benefits" findings under Municipal Code § 17.40.030.D; compliance with Design Guideline requirements of the Waterfront Master Plan; compliance with architectural treatment requirements under Municipal Code § 17.48.200; and compliance with coastal access and recreation under Municipal Code § 17.58.030.A.3 (Sheppard, Mullin, Richter & Hampton, 2001).

A CUP for the project property as it is currently zoned is a "permit ... for such use of the site and related facilities." Such a permit is, however, subsumed by the Energy Commission's exclusive siting authority under California Public

Resources Code § 25500. Likewise, the CUP requirement, imposed through the Concept Plan/Precise Development Plan process, is a "permit ... for such use of the site and related facilities " and is therefore also pre-empted by the Energy Commission's siting jurisdiction. Site certification from the Energy Commission over-rides the CUP requirement from both sources: Table 17.24.150 (CUP required in order to operate), and the PD overlay requirement (CUP for Concept and/or Precise Development Plan) (Sheppard, Mullin, Richter & Hampton, 2001).

Based upon the above, Staff concludes that the proposed facility is in compliance with the City's Zoning Ordinance and State law and that a CUP and CDP are not required. It is additionally noted that the project's MOU and the AFC indicate that the Applicant and the City are currently developing a mutually agreeable long-term Development Agreement (Development Plan, as referenced in the AFC) for the project property (City of Morro Bay, 2000a; Duke, 2000a). Staff concludes that the development agreement (which the MOU infers will be legally binding) meets, in essence, the intent of the above-referenced Concept and Precise Development Plans associated with the City's Zoning Ordinance.

Municipal Code §17.40.040: (1). Wetlands: The following are conditionally permitted uses in wetlands: road and bridge replacement, very minor, incidental public facilities when there is no other feasible, environmentally less-damaging alternative; other scientific and education work; restorative measures; and, commercial mariculture where no alteration of the wetland is necessary. (2). Sand Dunes, Sandspits: The following are conditionally permitted uses: road and bridge replacements, incidental public facilities when there is no other feasible, environmentally less-damaging alternative and where feasible mitigation measures have been provided to minimize adverse environmental effect. (3). Stream Corridors: The following are conditionally permitted uses: road and bridge access including public trails within the buffer; necessary pipelines and water supply projects where no alternative location exists; flood control projects where no other method for protecting existing structures in the floodplain is feasible and where such protection is necessary for public safety or to protect existing development; road and bridges where no alternative route/location is feasible and if support structures are not sited in the Environmentally Sensitive Habitat.

As indicated above, Staff concludes that the proposed project does not require a CUP. In addition, the proposed project will not create significant adverse impacts to wetlands, streams, or dune scrub habitat. The Applicant has also indicated that it has initiated consultations with appropriate federal and state agencies with jurisdictional authority over these resources (Duke, 2001a). Please refer to the ***TERRESTRIAL BIOLOGY*** *section of the AFC for details regarding protection and proposed mitigation for these resources.*

Municipal Code § 17.40.040(D) (3) Buffers Required, General: (a) Wetlands: The minimum buffer surrounding wetlands shall be one hundred (100) feet. Review area: minimum of two hundred fifty (250) feet. (b) Streams: The minimum buffer for streams shall be one hundred (100) feet in non urban areas and fifty feet (50) feet in urban areas. (c) Sand Dunes: The minimum buffer for sand dunes shall be one hundred (100) feet in non urban areas and fifty feet (50) feet in urban areas.

Municipal Code §17.40.040(D)(6) Reducing Buffers: (a) In all cases, except for wetlands, buffers may be reduced in accordance with the following standards if application of the buffer specified in §17.40.040.D.4 on a previously subdivided parcel would render that subdivided parcel unusable for its designated use. (b) Accommodation of designated use: Buffers may be reduced only to the point where the designated use is accommodated but in no case shall it be less than fifty (5) percent of the width called for in §17.40.040.D.4. Said reduction in setbacks may be permitted by the City, as provided below, only after consultation with the California Department of Fish and Game; the applicant shall implement as part of the development all mitigation measures deemed necessary for habitat protection after such consultation. All permitted reductions in buffer areas shall be found consistent with Policies 11.01, 11.05, 11.06 and 11.15 of the CLUP.

Municipal Code § 17.40.040(D)(7) Uses in Buffer Area: (a) General: The uses permitted in buffers shall generally be limited to those permitted in adjacent habitat area. Permanent Structures: No permanent structures shall be permitted within buffer areas except for those of a minor use such as in other districts: (a) at grade improvements for pedestrian or equestrian trails; (b) instructional or informational signs; (c) designated observation areas or other public access or educational facilities; (d) fences; (e) eves. Applications for all such improvements shall be submitted to the Department of Fish and Game for review and comment before the issuance of a Coastal Development Permit.

As addressed above, the proposed project will not require a CDP. However, the proposed project will use appropriate buffers and no permanent power generation structures will be located in buffer zones. The potential exists for the project to reinforce the existing flood control berms, which could require consultation with appropriate federal and state agencies having jurisdictional authority over sensitive resources within the buffer zones. The Applicant has indicated that it has initiated such consultations (Duke, 2001a). Please refer to the ***TERRESTRIAL BIOLOGY*** *section of the AFC for details regarding protection and proposed mitigation for these resources.*

Municipal Code §17.40.040(D)(8) Subdivisions Prohibited: The further subdivision of any ESH [Environmentally Sensitive Habitat] area shall be prohibited except where the sensitive habitat area is to be transferred in fee to a public agency for a wildlife refuge or for a wildlife management area.

The proposed project will not subdivide any Environmentally Sensitive Habitat area. In addition, implementation of proposed condition of certification ***LAND-2*** *will provide the City with a permanent easement over these areas.*

Municipal Code §17.40.040(D)(9) Performance Standards: All other sections of this Chapter notwithstanding, no uses shall be permitted unless the following performance standards are met, as applicable, in new developments: (a) Significant Adverse Effects: New development shall not result in significant adverse effects upon habitat values. (b) Revegetation: Where permitted uses require the removal of riparian or dune related plant species, such removal shall be limited to the minimum

amount necessary and revegetation with (1) native vegetation in the habitat areas of rare or endangered species, or (2) native, drought-tolerant plants where determined feasible and approved by the City. All such proposals calling for removal of vegetation and subsequent revegetation shall be submitted to the Department of Fish and Game for review and comment. (c) Walkways, Trails and Similar Uses: walkways, bicycle trails, overlooks and other structures for nature study and passive recreational use shall be designed to minimize the disturbance of wildlife and vegetation. For example, in dune areas elevated walkways may be required. (g) Other Agency Permits: Prior to any construction, alteration, or other improvement in areas designated as wetlands or estuaries the following shall be presented to the City: (1) 404 Permit: A Section 404 Permit (or its equivalent successor) from the U. S. Army Corps of Engineers; (2) Letter from the California State Department of Fish and Game: A letter from the California State Department of Fish and Game stating compliance with Section 1601 and 1603 (or their equivalent successors) of the State Fish and Game Code.

The Applicant has committed to compliance with all applicable performance standards required for Environmentally Sensitive Habitat areas (Duke, 2000a). The proposed project includes revegetation with native species, and as referenced under the LORS compliance discussion for CLUP Policy 11.16, revegetation plans shall be subject to review and comment by U. S. Fish and Wildlife Service and the Department of Fish and Game. The proposed project includes creating and improving bicycle and pedestrian paths to improve public access and circulation while minimizing potential impacts to sensitive resources. These improvements have been designed in consultation with the City.

Additionally, the Applicant has indicated that they have initiated consultation with appropriate federal and state agencies having regulatory authority over wetlands (Duke, 2001a). The proposed Morro Creek bridge may require administrative review and possible permit authorization by the U.S. Coast Guard under Section 9 of the Rivers and Harbors Act (Duke, 2000a). ***LAND-7*** *has been proposed as a Condition of Certification.*

CITY OF MORRO BAY WATERFRONT MASTER PLAN

Only Chapter 5 of the Master Plan has been adopted by the City; the remainder of the document is currently considered recommendation only (City of Morro Bay, 2000b) The Coastal Commission had not reviewed or certified the Master Plan. The only proposed project component that is relevant to Master Plan Chapter 5 is the seawater intake structure due to it being within "Planning Area 2". Modifications to the seawater intake structure include new pumps and a new facade with architectural design to promote a "fishing village" appearance.

The ***VISUAL RESOURCES*** *section of the PSA provides an analysis of the intake structures compliance with the Master Plan.*

In addition to the above, the proposed project will foster components of the Master Plan that have not yet been adopted by the City. Including:

Roads/Vehicular Circulation: As outlined Chapter 3 "Transportation and Harbor Improvements", the project proposes implementation of the Embarcadero Road Extension, a bridge over Morro Creek, and bike and pedestrian paths in front of the property along Embarcadero Road and along the Embarcadero Road extension.

Pedestrian/Bicycle Circulation/Handicapped Access: The Project proposes construction of several bike and pedestrian paths described in Chapter 3 of the Master Plan. Specifically, the Project will construct a Class 1 bike path and pedestrian sidewalk along the Embarcadero in front of the existing plant, and another bike path and pedestrian path along the Embarcadero extension and across the proposed bridge over Morro Creek (Duke, 2001a).

The Master Plan and its 1997 amendment stipulate development plans for the "Den Dulk" property. Potential development recommendations of the Master Plan and amendment for the property include recreational facilities, parking, and vessel haul out areas. Such development would be contingent upon City acquisition of the property. The Master Plan additionally notes in Chapter 4 that the Den Dulk property "shall be required to have a development plan approval [i.e. CUP and CDP issuance] prior to any rezoning or construction" due to concern regarding development of the property (City of Morro Bay, 1996).

As a component of the proposed project, use of the "Den Dulk" property, if acquired or leased by the Applicant, would not be subject to a CUP or CDP, per the discussion presented in the LORS compliance subsection for the City of Morro Bay Zoning Ordinance. Additionally, it is noted that Chapter 4 of the Master Plan has not been adopted by the City, and therefore is not established local policy as yet. However, it is noted that Applicant and City are working cooperatively to achieve development of the property agreeable to both parties (Duke, 2001a). Additionally, use of the property is addressed in the MOU, and will be incorporated into any legally binding Development Agreement between the Applicant and City.

DEN DULK PROPERTY

As part of the proposed project the Applicant plans to purchase the "Den Dulk" property. This property is undeveloped, approximately 7.2 acres in size, and located immediately west of the project property on the west side of the Embarcadero. The purpose of the purchase is to "further improve coastal access, avoid potential development of sensitive habitat, provide a buffer between the new plant and public uses, and may facilitate the City of Morro Bay's implementation of its Waterfront Master Plan" (Duke, 2000a). Improved coastal access will be achieved via proposed bikeways, extension and re-alignment of the Embarcadero, and relocation of Coleman Drive (Duke, 2001a). The City and the applicant are discussing the potential use of this property.

The Applicant does not plan on developing the property in any way other than stated above and has additionally stated that it will work cooperatively with the City to achieve mutual long-term goals for its non-industrial use (Duke, 2001a). Purchase and/or lease of the "Den Dulk" property would be consistent with § 25529 of the Warren-Alquist Act, which requires that an Applicant proposing power plant development within the Coastal Zone establish an area for public use.

CITY OF MORRO BAY RESOLUTION NO. 22-01

The City's Resolution regarding the proposed project reflects general community support of the MBPP modernization. The Resolution does not conflict with the proposed project or the Energy Commission process for review and certification.

MEMORANDUM OF UNDERSTANDING: CITY OF MORRO BAY AND DUKE ENERGY MORRO BAY LLC

The existing MOU acknowledges both City and Applicant willingness to work cooperatively to develop a Development Agreement agreeable to both parties

It is additionally noted that the current MOU requires, under item three of "Conveyance to a Successor" section: "CEC Enforcement of Demolition Obligation on Successors: Duke and or any successor in interest agree to make demolition obligations under the terms of this MOU enforceable by the CEC through the CEC's conditions of certification of the AFC." To ensure that the City's concerns regarding demolition of the existing facility are met, and that long-term dual operation of the existing and proposed facility do not occur, Staff proposes that the Applicant be required to demolish the existing facility according to both the specifications and the timeframes identified in the proposed condition of certification **LAND-4**.

CITY OF MORRO BAY BALLOT MEASURE O AND P

Election results of Ballot Measure O reflect that the majority of the City's registered voters support modernization of the existing facility. Such support is not in conflict with the proposed project or the Energy Commission's review and approval process.

Election results of Ballot Measure P reflect that a minority of the City's registered voters supported voter approval any General Plan amendment required for the proposed project. Per the discussion presented in the LORS compliance subsection for the City of Morro Bay CLUP(Chapter VII: Energy/Industrial Development) the project would not require an amendment to the CLUP, and therefore, would not require amendment to the City's General Plan.

CITY OF MORRO BAY FLOOD DAMAGE PREVENTION ORDINANCE (NO. 477)

The Applicant has indicated that compliance with applicable NFIP requirements for the proposed project may require facility modifications and/or adopted 100-year floodplain map modifications to ensure compliance with FEMA. An assessment of the 100-year floodplain associated with Morro Creek and FEMA compliance is provided in the **SOILS AND GEOLOGY** section of the PSA.

SAN LUIS OBISPO COUNTY & OTHER LOCAL LAND USE PLANS AND DOCUMENTS

The Applicant has not yet established the proposed sites for construction lay down/staging areas. Consequently, Staff cannot predict whether these areas will require discretionary or administrative permitting with the County or another jurisdiction. Although the Applicant anticipates use of Industrially zoned sites, to ensure that all necessary local land use requirements are adhered to and necessary permits are acquired, Staff proposes to require the Applicant to verify the selected sites and submit to the all required permits, if applicable, for their use. Staff proposes this mitigation measure as proposed condition of certification **LAND-6**.

COMPATIBILITY WITH EXISTING AND PLANNED LAND USES

The proposed project would be located at the existing MBPP site, which has been in operation since 1955. The project represents further development of a site committed to Coastal-Dependent Industrial use, rather than the introduction of new industry in a non-industrial area of the City. The proposed MBPP is consistent with the City's land use designations and zoning and would not constitute a change in the current development pattern of the City, as established by the City's adopted CLUP or General Plan. Furthermore, the project is compatible with the existing industrial character of the immediate surrounding land uses, which includes the approximate 26.27-acre PG&E substation.

The construction lay down/staging areas for the proposed project are not currently identified; however, existing industrial sites are anticipated to be used. Assuming the use of existing industrial sites, and with implementation of proposed condition of certification **LAND-6,** no conflict with existing or planned land uses would occur.

Construction impacts, such as increased dust, noise, and traffic may affect land uses within the vicinity of the project. With mitigation, noise and traffic impacts would be reduced to an insignificant level. Refer to the **AIR QUALITY**, **NOISE** and **TRAFFIC AND TRANSPORTATION** sections of the PSA. Staff has proposed all feasible mitigation to control fugitive dust impacts during construction. Staff has determined that the operation of the MBPP would not cause unmitigated, significant adverse noise, dust, public health hazard or nuisance, traffic, or visual impacts on nearby land uses. Please see the **NOISE**, **AIR QUALITY**, **PUBLIC HEALTH**, **TRAFFIC AND TRANSPORTATION**, and **VISUAL RESOURCES** sections of the PSA.

Since the power generating facility itself would be located entirely within the boundaries of the existing MBPP site, the proposed project would not disrupt or physically divide an established community, convert agricultural land to a non-agricultural use, or significantly impact sensitive lands or open space.

The proposed project does include modifications to the existing seawater intake structure, located in Morro Bay Harbor. During modification there may be temporary impacts associated with increased dust, noise, and traffic that may affect land uses within the vicinity of the project. With mitigation, and due to their temporary nature, noise and traffic impacts would be reduced to an insignificant

level. Please refer to the **NOISE** and **TRAFFIC AND TRANSPORTATION** sections of the PSA.

The proposed project additionally includes the development or improvement of several pedestrian and bike paths surrounding the MBPP property, realignment of the Embarcadero and Coleman Drive, a pedestrian/bicycle bridge over Morro Creek, and use of the "Den Dulk" property for enhanced public coastal access and facility buffer. These project components have been developed in consultation with the City. During construction of these project components there may be temporary impacts associated with increased dust, noise, and traffic that may affect land uses within the project vicinity, as well as temporary impacts to biological resources. With mitigation, these impacts would be reduced to an insignificant level (please refer to the **AIR QUALITY**, **NOISE**, **TERRESTRIAL BIOLOGY**, and **TRAFFIC AND TRANSPORTATION** sections of the PSA). Staff has found that construction and maintenance of these off-site project components would not cause unmitigated, significant adverse noise, dust, public health hazard or nuisance, traffic, or visual impacts on nearby land uses. In addition, finalization and implementation of the proposed project's Development Agreement will ensure that the City's existing and planned uses of the project area are accounted for. Therefore, the MBPP would not preclude or unduly restrict existing or planned uses.

The AFC identifies twelve sensitive receptors and several residential developments proposed within a one mile radius of the project site (Duke, 2000a, 2001a). The closest residential development was established following construction and start-up of the existing MBPP. Due to improved technology and equipment associated with the proposed project, in conjunction with implementation of proposed mitigation, a net reduction in operational impacts of the facility would occur. Please see the **NOISE**, **AIR QUALITY**, **PUBLIC HEALTH**, **TRAFFIC AND TRANSPORTATION**, and **VISUAL RESOURCES** sections of the PSA.

CUMULATIVE IMPACTS

In addition to the MBPP, there are 16 proposed projects within a five mile radius of the MBPP site (Duke, 2001a). In comparison to the proposed MBPP, these projects are relatively small in scale and include residential, commercial and recreational (campground) development. In addition to these projects, the Applicant is proposing demolition of its off-site fuel tanks. The combined projects would not significantly disrupt or physically divide an established community. Additionally, discretionary approval of these projects would ensure consistency with applicable local land use planning documents and Zoning Ordinances.

Cumulative construction impacts, such as increased dust, noise, and traffic may affect the general project vicinity. The cumulative, construction noise effects of all these projects are not expected to be significant. Please see the **TRAFFIC AND TRANSPORTATION** sections of the PSA for a discussion of the cumulative traffic impacts. Cumulative dust impacts are anticipated to be significant. Please see the **AIR QUALITY** section of the PSA.

DISPROPORTIONATE IMPACT

Staff follows the U.S. Environmental Protection Agency's guidance in conducting a two-step analysis to determine whether the proposed project would have a disproportionately high and adverse effect on the health or environment of minority and low-income populations. The analysis assesses whether the potentially affected community has a population that is more than 50 percent minority and/or low income, or has a minority or low-income population percentage that is meaningfully greater than the percent of minority or low-income persons in the general population, or other appropriate unit of geographic analysis. The analysis also assesses whether the environmental impacts are likely to fall disproportionately on the minority and/or low income population.

With regard to Land Use, the staff analysis has concluded that the project would not disrupt an existing community, and would not conflict with existing or planned land uses. The affected area for this analysis included land areas within a one-mile radius of the project, and within one-quarter mile of any electrical or gas transmission route.

The project impacts for Land Use, and discussed in this portion of the staff assessment, would tend to decrease as the area under review is further removed from the actual project site. The General Plan and Zoning Ordinance of the respective city applies only within their jurisdictional boundary, and the six-mile radius study area for disproportionate impact is further removed from the municipalities in which the project site or transmission lines are located. Staff has identified no evidence that locating the project at its proposed location would have an impact on the land use of areas within one mile of the site, and the conclusion would be the same for the six-mile radius area. No impacts for Land Use have been identified that would fall disproportionately on a minority and/or low income population.

FACILITY CLOSURE

At some point in the future, the proposed facility would cease operation and close down. At that time, it would be necessary to ensure that closure occurs in such a way that public health and safety and the environment are protected from adverse impacts.

The information provided in the AFC does not specifically address the effects of project closure on land use issues and concerns. The planned lifetime of the MBPP is 30 years (Duke, 2000a). At least twelve months prior to the initiation of decommissioning, the Applicant would prepare a Facility Closure Plan for Energy Commission review and approval. At the time of closure, all applicable LORS would be identified and the closure plan would discuss conformance of decommissioning activities with these LORS.

There are at least two other circumstances under which a facility closure can occur, unexpected temporary closure and unexpected permanent closure. Staff has not identified any LORS from a land use perspective that the Applicant would have to

comply with in the event of unexpected temporary closure or unexpected permanent closure of the MBPP.

MITIGATION

Staff's proposed conditions of certification would ensure that the MBPP would comply with the Coastal Act, Warren-Alquist Act, State tide and submerged lands leasing requirements, the City's General Plan, CLUP, adopted portion of the Waterfront Master Plan, Zoning Ordinance and Flood Damage Prevention Ordinance. These Conditions of Certification would mitigate any potential land use impacts to a less than significant level.

With mitigation, operation of the MBPP is not expected to cause significant adverse noise, dust, public health, traffic, or visual impacts, or contribute substantially to any cumulative, indirect land-use impacts. In terms of noise effects, use of state-of-the-art equipment and technology would reduce the noise currently produced. Thus, the net cumulative impact to nearby land uses would be beneficial rather than adverse (please see the **NOISE** section of the PSA). This is also the case with cumulative visual impacts of the MBPP and other modernization activities. The removal of the three 450-foot stacks, and eventual facility landscaping and screening would reduce the horizontal field of view occupied by the existing MBPP. Please also refer to the **AIR QUALITY**, **PUBLIC HEALTH**, **VISUAL RESOURCES** and **TRAFFIC AND TRANSPORTATION** sections of the PSA.

CONCLUSION AND RECOMMENDATON

CONCLUSION

The MBPP maintains the character of the City and its land use resources by: 1) the project is compatible with the heavy industrial character of the site; 2) the project would not disrupt or divide the physical arrangement of an established community; 3) the project would not preclude or unduly restrict existing or planned land uses; and 4) with mitigation, operation of the project would not cause any significant noise, dust, public health, traffic, or visual impacts to nearby land uses, nor would the operation of the MBPP contribute substantially to any cumulative land use impacts.

RECOMMENDATION

If the Energy Commission certifies the MBPP, Staff recommends that the Commission adopt the following proposed Conditions of Certification.

CONDITIONS OF CERTIFICATION

LAND-1 The project owner shall comply with the State requirements for the leasing of designated tide and submerged lands (Pub. Resources Code section 6701-6706), as required for the project's Outfall Area.

Verification: The project owner shall provide the California Energy Commission's Compliance Project Manager (CPM) a copy of the signed new executed Outfall Agreement prior to November 15, 2004 or prior to the start of power generation by the new facility which ever occurs first.

LAND-2 The project owner shall dedicate a permanent conservation easement to the City of Morro Bay for all designated Environmentally Sensitive Habitat areas located within the existing MBPP property under Duke Energy's ownership. Said designated Environmentally Sensitive Habitat area shall be identified by field survey(s) conducted by a qualified biologist/botanist and shown on a map (i.e. habitat map, land use map, etc.)

Verification: The project owner shall provide to the CPM copies of the mapped areas and all recorded executed conservation easements on the designated Environmentally Sensitive Habitat areas within the MBPP property prior to the start of power generation by the new facility.

LAND-3 The project owner shall provide land to be established for public use in accordance to Section 25529 of the Warren-Alquist Act subject to the approval of the California Energy Commission. Said land shall be covered under an easement designating it for public use. Said land shall be maintained by the project owner and shall be available for public access and use, subject to restrictions required for security and public safety. The project owner may dedicate such public use land to any local agency agreeing to operate or maintain it for the benefit of the public. If no local agency agrees to operate or maintain said land for the benefit of the public, the project owner may dedicate the land to the State.

Verification: The project owner shall provide to the CPM a copy of the recorded grant deed and public use easement on the land approved by the Energy Commission prior to the start of power generation by the new facility.

LAND-4 The project owner shall demolish the original power generation facility consisting of the three 450 foot exhaust stacks, the existing steam power generation building for Units 1-4 and the six on-site oil storage tanks in accordance to the California Building Codes within 36 months after the start date of commercial power generation by the new power generation facility.

Verification: The project owner shall provide the CPM a copy of the final inspection issued for the demolition by the City of Morro Bay Building Department within 36 months after the start date of commercial power generation by the new power generation facility.

LAND-5 Prior to site mobilization, the project owner shall submit a detailed site plan for the project to the Director of the City of Morro Bay Public Services Agency for review and comment and to the CPM for review and approval. The site plan shall comply with the applicable provisions of the City of Morro Bay's Planned Development (PD) overlay zone regulations.

Protocol: The project owner shall submit a detailed site plan, including support facilities and a landscaping plan for the project, to the Director of the City of Morro Bay Public Services Agency for review and comment and to the CPM for review and approval. If the CPM notifies the project owner that

revisions of the plan are needed before the CPM will approve the plan, the project owner shall prepare and submit to the CPM a revised plan.

Landscaping shall not be planted prior to the approval of a landscaping plan. The project owner shall notify the CPM when the landscaping has been planted and is ready for inspection.

Verification: Prior to site mobilization the project owner shall submit a detailed site plan including support facilities and a landscape plan to the CPM for approval. A copy of any comments received, from the Director of the City of Morro Bay Public Services Agency shall also be provided to the CPM. The project owner shall submit any required revisions within 30 days of notification by the CPM. The project owner shall notify the CPM within seven days after landscaping is planted that the landscaping is ready for inspection.

LAND-6 The project owner shall provide the Director of the City of Morro Bay Public Services Agency for review and comment and the CPM for review and approval: (1) descriptions of the final lay down/staging areas identified for construction of the project, including (a) Assessor's Parcel numbers; (b) addresses; (c) General Plan, and LCP (if applicable) land use designations; (d) zoning; (e) site plan showing dimensions; (f) owner's name and address (if leased); and, (g) duration of lease (if leased); and, if a discretionary permit was required; (2) copies of all discretionary and/or administrative permits necessary for site use as a lay down/staging areas.

Verification: Prior to the start of site mobilization, the project owner shall provide to the Director of the City of Morro Bay Public Services Agency for review and comment and the CPM for review and approval all project-related documentation, as specified above, for the project's construction lay down and staging areas.

LAND-7 The project owner shall provide the Director of the City of Morro Bay Public Service Agency and the CPM copies of the approved regulatory permits for any construction, alteration, or other improvement in areas designated as federal or state wetlands or estuaries.

Verification: Prior to construction, alteration, or other improvements in areas designated as federal or state wetlands or estuaries the project owner shall provide to the Director of the City of Morro Bay Public Service Agency and the CPM copies of any issued federal or state regulatory agency permits: such as a Section 404 Permit (or its equivalent successor) from the U. S. Army Corps of Engineers; (2) A letter from the California State Department of Fish and Game stating compliance with Section 1601 and 1603 (or their equivalent successors) of the State Fish and Game Code.

LAND-8 Prior to the start date of commercial power generation by the new power generation facility, the project owner shall complete the construction of the new façade for the MBPP cooling water intake structure. The new façade shall be consistent with the design guidelines set forth in Chapter 5 of the City of Morro Bay's Waterfront Master Plan, adopted May 28, 1996.

Protocol: Prior to the start date of commercial power generation of the new power generation facility, the project owner shall provide the Chief Building Official for the City of Morro Bay the design and building plans for the new façade for approval. The façade shall be constructed in accordance to the California Building Codes.

Verification: Upon completion of the construction of the new façade, the project owner shall provide a copy of the approved final inspection issued by the City of Morro Bay Building Department to the CPM.

REFERENCES

California Coastal Commission. "Coastal Commission Power Plant Sitting Study" map 102 (Figure 6.9-10) and map104 (Figure 6.9-11). September 5, 1978.

California State Lands Commission. 2001. http://www.slc.ca.gov/Regulations. April, 2001.

City of Morro Bay. 1982. Local Coastal Plan. September 1982.

City of Morro Bay. 1988. General Plan.

City of Morro Bay. 1996. Waterfront Master Plan (City Council Resolution No. 43-96). May 28, 1996.

City of Morro Bay. 1997a. Minutes of the Morro Bay City Council, Regular Meeting. September 22, 1997.

City of Morro Bay. 1997b. City Council Staff Report: Review of Waterfront Master Plan and Boating Access Feasibility Study. September 22, 1997.

City of Morro Bay. 2000a. Memorandum or Understanding Between the City of Morro Bay and Duke Energy Morro Bay LLC. February 28, 2000.

City of Morro Bay. 2000b. Public Review Draft General Plan/Coastal Land Use Plan. August, 2000.

City of Morro Bay. 2000c. Waterfront Boardwalk and Circulation Improvements – Project Feasibility Study. April 3, 2000.

City of Morro Bay, 2001a. http://www.morro_bay.ca.us/index.htmp. April, 2001.

City of Morro Bay. 2001b. Resolution of the City Council (Resolution No. 22-01). April 9, 2001.

Duke Energy. 2000a. Application for Certification, Morro Bay Power Plant Project (00-AFC-12). Submitted to the California Energy Commission October 23, 2000.

Duke Energy. 2001a. Response to Data Requests on the Application for Certification, Morro Bay Power Plant Project (99-AFC-4). Submitted to the California Energy Commission, March 7, 2001.

Duke Energy. 2001b. Response to Data Requests on the Application for Certification, Morro Bay Power Plant Project (99-AFC-4). Submitted to the California Energy Commission, April 11, 2001.

Sheppard, Mullin, Richter & Hampton. 2001. Memorandum: Analysis of Land Use Consistency, Morro Bay Power Plant Project. April, 2001.

NOISE AND VIBRATION

Jim Buntin

INTRODUCTION

The construction and operation of any power plant creates noise, or unwanted sound. The character and loudness of this noise, the times of day or night that it is produced, and the proximity of the facility to sensitive receptors combine to determine whether the facility would meet applicable noise control laws and ordinances, and whether it would cause significant adverse environmental impacts. In some cases, vibration may be produced as a result of power plant operation or construction practices, such as pile driving. The ground-borne energy of vibration has the potential to cause structural damage and annoyance.

The purpose of this analysis is to identify and examine the likely noise and vibration impacts from the construction and operation of the Morro Bay Power Plant Project (00-AFC-12), and to recommend procedures to ensure that the resulting noise and vibration impacts would be adequately mitigated to comply with applicable laws, ordinances, regulations, and standards (LORS).

LAWS, ORDINANCES, REGULATIONS AND STANDARDS

FEDERAL

Under the Occupational Safety and Health Act of 1970 (OSHA) (29 U.S.C. § 651 et seq.), the Department of Labor, Occupational Safety and Health Administration (OSHA) has adopted regulations (29 C.F.R. § 1910.95) designed to protect workers against the effects of occupational noise exposure. These regulations list permissible noise exposure levels as a function of the amount of time to which the worker is exposed (see **Noise: Appendix A, Table A4** immediately following this section). The regulations further specify a hearing conservation program that involves monitoring the noise to which workers are exposed, assuring that workers are made aware of overexposure to noise, and periodically testing the workers' hearing to detect any degradation.

There are no federal laws governing off-site (community) noise.

The Federal Transit Administration (FTA) has published guidelines for assessing the impacts of ground-borne vibration associated with construction of rail projects, which have been applied by other jurisdictions to other types of projects. The FTA-recommended vibration standards are expressed in terms of the "vibration level," which is calculated from the peak particle velocity measured from ground-borne vibration. The FTA measure of the threshold of perception is 65 VdB, which correlates to a peak particle velocity of about 0.002 inches per second (in/sec). The FTA measure of the threshold of architectural damage for conventional sensitive structures is 100 VdB, which correlates to a peak particle velocity of about 0.2 in/sec.

STATE

California Government Code Section 65302(f) encourages each local government entity to perform noise studies and implement a noise element as part of its General Plan. In addition, the California Office of Planning and Research has published guidelines for preparing noise elements, which include recommendations for evaluating the compatibility of various land uses as a function of community noise exposure. The State land use compatibility guidelines are listed in **NOISE: Table 1**.

NOISE: Table 1 - Land Use Compatibility for Community Noise Environment

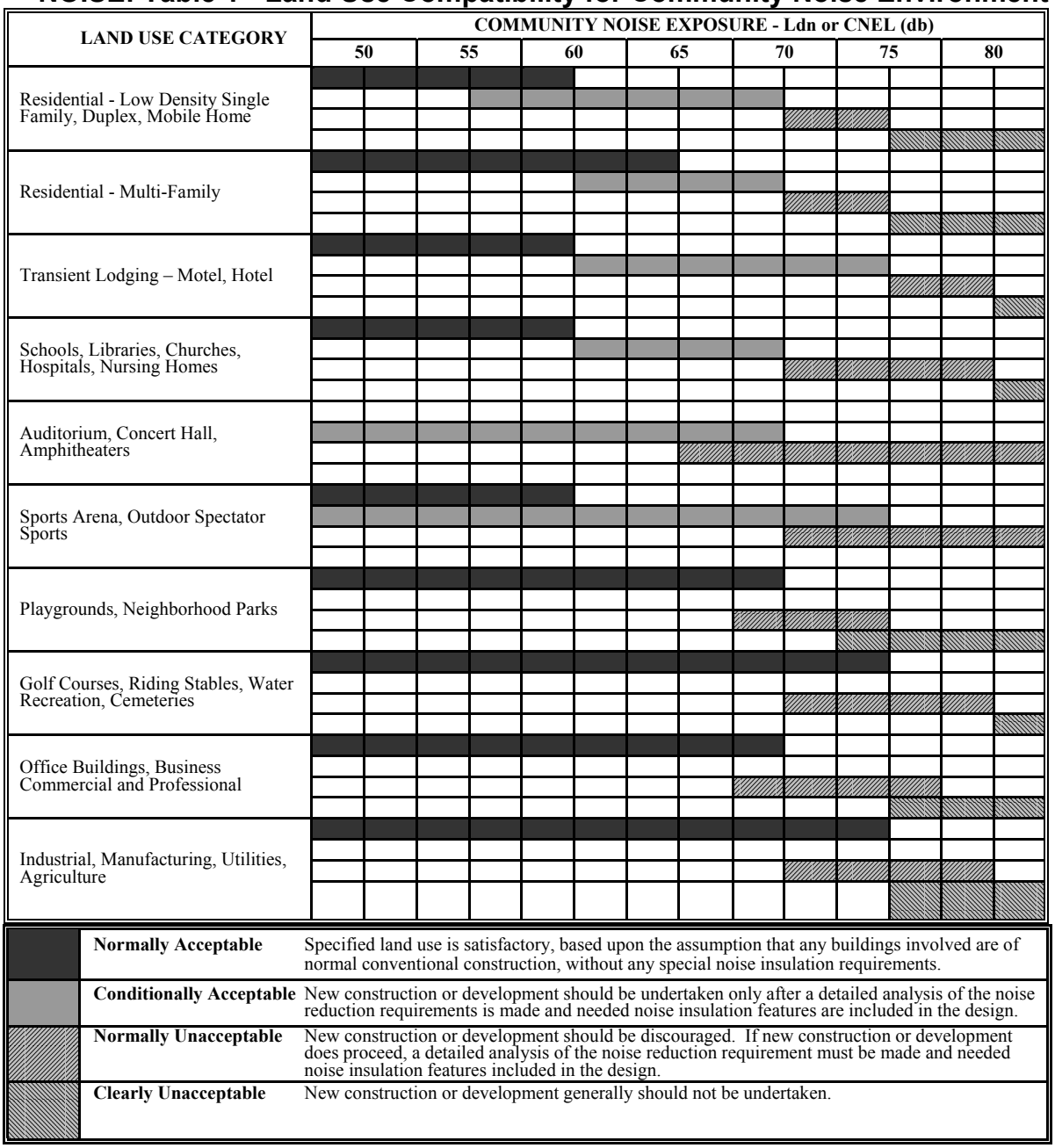

Source: State of California General Plan Guidelines, Office of Planning and Research, June 1990.

The State of California, Office of Noise Control, prepared a Model Community Noise Control Ordinance, which provides guidance for acceptable noise levels in the

absence of local noise standards. The Model also contains a definition of "pure tone" which can be used to determine whether a noise source contains significant pure tone components. The Model Community Noise Control Ordinance states that a pure tone exists if the one-third octave band sound pressure level in the band with the tone exceeds the arithmetic average of the two contiguous bands by 5 decibels (dB) for center frequencies of 500 Hz and above, or by 8 dB for center frequencies between 160 Hz and 400 Hz, or by 15 dB for center frequencies less than or equal to 125 Hz. The Model Community Noise Control Ordinance further recommends that, when a pure tone is present, the applicable noise standard should be lowered (made more stringent) by 5 dBA.

Other State LORS include the California Environmental Quality Act (CEQA) and the California Occupational Safety and Health Administration (Cal-OSHA) regulations.

CALIFORNIA ENVIRONMENTAL QUALITY ACT

CEQA requires that significant environmental impacts be identified, and that such impacts be eliminated or mitigated to the extent feasible. Section XI of Appendix G of CEQA Guidelines (Cal. Code Regs., tit. 14, App. G) sets forth some characteristics that may signify a potentially significant impact. Specifically, a significant effect from noise may exist if a project would result in:

a) exposure of persons to or generation of noise levels in excess of standards established in the local General Plan or noise ordinance, or applicable standards of other agencies;

b) exposure of persons to or generation of excessive groundborne vibration or groundborne noise levels;

c) a substantial permanent increase in ambient noise levels in the project vicinity above levels existing without the project; or

d) a substantial temporary or periodic increase in ambient noise levels in the project vicinity above levels existing without the project….

The Energy Commission has interpreted the CEQA criteria such that noise produced by the permitted power-producing facility that causes an increase of more than 5 dBA in the background noise level (L_{90}) at a noise sensitive receiver during the quietest hours of the day is usually considered a significant effect.

Noise due to construction activities is usually considered to be insignificant in terms of CEQA compliance if:

1. The construction activity is temporary,
2. Use of heavy equipment and noisy activities is limited to daytime hours, and
3. All feasible noise abatement measures are implemented for noise-producing equipment.

CAL-OSHA

Cal-OSHA has promulgated Occupational Noise Exposure Regulations (Cal. Code Regs., tit. 8, §§ 5095-5099) that set employee noise exposure limits. These standards are equivalent to the federal OSHA standards (**see NOISE: Appendix A, Table A4**).

LOCAL

MORRO BAY GENERAL PLAN NOISE ELEMENT

The City of Morro Bay has adopted specific noise performance standards for stationary sources in the Noise Element of the General Plan (City of Morro Bay 1987). The noise levels considered acceptable for residential land uses are described by **NOISE: Table 2**.

Noise: Table 2 - Morro Bay Noise Element Standards

Noise Level Descriptor	Daytime Standard, dBA (7 a.m. to 10 p.m.)	Nighttime Standard, dBA (10 p.m. to 7 a.m.)
Hourly L_{eq}	50	45
Maximum Level	70	65
Maximum Impulsive Level	65	60

The above noise standards are applied at the property line of the receiving land use. When determining the effectiveness of noise mitigation measures, the standards may be applied on the receptor side of noise barriers or other property line noise mitigation measures (rather than at the property line).

SETTING

PROJECT BACKGROUND

The Morro Bay Power Plant (MBPP) Project involves the construction and operation of a 1,200-megawatt (MW) power plant, which is proposed to be located at the existing 1,030 MW Morro Bay Power Plant site that is owned and operated by Duke Energy.

The new units will replace currently operating generation Units 1 and 2 (326 megawatts [MW], 1950's technology) and Units 3 and 4 (676 MW, 1960's technology) with two state-of-the-art 600 MW combined cycle units. Each new unit will be capable of producing 600 MW, so that upon completion, the Plant will be capable of producing a total of 1,200 MW. Each new unit will consist of two gas-fired turbines and one steam turbine driven by the heat produced by the other two turbines. Each new unit will have two 145-foot tall stacks compared with the existing plant's three 450-foot tall stacks.

The MBPP will continue to interconnect with the electrical grid at the existing PG&E switchyard located on the plant site.

The Project will include demolition of the on site fuel oil tank farm, all existing power plant equipment (boiler – steam turbine complex), and removal of three 450 feet tall exhaust stacks. Stage one: demolition of the tank farm, will take three months, and will be complete in 2002. Stage two: demolition of the three 450 foot stacks, will begin after commercial operation of the new units, and will take about 21 months. Stage three: dismantling of the existing units, will take about 47 months.

The equipment that has the greatest potential to generate significant noise levels includes the gas and steam turbines, steam generator, pumps, motors, main transformers, and an instrument air compressor. During construction of the project, pile driving and demolition have the potential to produce significant ground-borne vibration levels.

EXISTING LAND USE

POWER PLANT SITE

This site is located within the City of Morro Bay, San Luis Obispo County, near Morro Bay Harbor, bordered on the west by Embarcadero Road and on the east by Highway 1. The Project would be located within the existing MBPP property, in part where the current tank farm is located. Land uses in the project vicinity include recreational, residential, commercial, school and business uses.

Noise from the existing plant dominates the background acoustical environment in the near vicinity. The closest noise sensitive receptors are homes located at the west end of Surf Street, which is immediately south of the plant. Noise from the existing plant is also dominant at the commercial area west of the plant entrance. In other areas of Morro Bay, plant noise is often inaudible, especially during periods of heavy traffic, which includes most daytime hours. For example, traffic on State Highway 1 dominates the daytime noise environment east and north of the plant site. On the hillside east of the plant, the plant noise is audible when highway traffic noise is reduced, such as at night.

The noise levels produced by the existing plant vary depending upon the level of power production. In general, plant noise is higher during daytime hours, when electrical demand is highest. The dominant plant noise sources appear to be the fans, generators and transformers.

The project will involve installing new electrical generation equipment north to the area currently occupied by the tank farm. This will move the acoustical center of the project a significant distance to the north, so that the greatest potential noise effects will occur north of the currently-affected residential areas. Therefore, for this analysis, the Morro Dunes RV Park was considered to be the nearest sensitive receptor to the acoustical center of the project.

LINEAR FACILITIES

The MBPP will continue to interconnect with the electrical grid at the existing PG&E Morro Bay switchyard located on the plant site. Therefore, no off-site linear facility construction is required for this project. (Duke 2000a, AFC § 6.12.2.2)

The MBPP will tie into natural gas and potable water supply pipelines that are located within the property boundary of the MBPP site. Therefore, no off-site pipeline construction is required for this project.

EXISTING NOISE LEVELS

In order to predict the likely noise effects of the project on adjacent sensitive receptors, Duke Energy (Duke or applicant) commissioned ambient noise surveys of the area. The surveys were conducted, at various hourly time intervals in January and June of 1999, and were supplemented in July 2000. The noise surveys were conducted using Bruel & Kjaer and Larson Davis sound level meters meeting the requirements of the American National Standards Institute (ANSI) for Type 1 sound level measurement systems. The measurements were performed at heights of approximately five feet above ground level to simulate the average height of the human ear (Duke 2000a, AFC § 6.12.1.3.2).

The applicant's noise survey monitored existing noise levels at the following fourteen off-site monitoring locations, which are shown by **NOISE: Figure 1**:

1. Scott Avenue – residential area southeast of project site
2. Morro Bay High School – north of project site
3. Morro Bay Elementary School – south of project site
4. Radcliff Street at Berwick Drive – residential area east of Highway 1
5. Morro Dunes RV Park – north of project site
6. First Church of Christ Scientist - south of project site
7. Morro Bay Library - south of project site
8. Piney Way at Olive Drive – residential area south of project site
9. MBPP Entrance
10. Embarcadero Retail Area – west of project site
11. Public Park at Coleman and Embarcadero - west of project site
12. Public Beach Shoreline - west of project site
13. Morro Rock, East Side - west of project site
14. Morro Rock, West Side - west of project site

Insert **NOISE: Figure** 1 here…….

NOISE: Table 3 summarizes the ambient noise measurement results (Duke 2000a, AFC § 6.12.1.3.4).

Noise: Table 3: Summary of Measured Noise Levels

Measurement Sites	Measured Noise Levels, dBA		
	Nighttime		CNEL
	L_{eq}	L_{90}	
1	43	41	53
2	45	42	60
3	45	42	56
4	43	42	59
5	42	40	50-55*
6	46	43	55-60*
7	42	40	50-55*
8	37	36	45-50*
9	61	60	70-75*
10	67	63	70-75*
11	57	54	60-65*
12	62	55	65-70*
13	48	46	55-60*
14	53	49	60-65*
* - Energy Commission staff estimate			

The applicant has agreed to conduct a supplemental ambient noise measurement over a 25-hour period at the Morro Dunes RV Park (Site 5) when plant operation factors at the existing facility are in the range of 40% to 80%, which is similar to those encountered during the previous surveys (DUKE/Trump 2001a). This measurement will provide additional information concerning ambient noise levels at the most-affected residential receptor.

The applicant also conducted frequency analyses of the noise measured at Locations 1-8, during day and late night hours. These data provide the basis for a comparison of the frequency content of the existing and the proposed plant, primarily to determine the presence of pure tones. The existing plant produced noticeable pure tones in the lower frequency bands, most likely due to the Unit 3 and Unit 4 forced-draft fans and transformers (Duke 2000a, AFC § 6.12.1.3.4).

In general, the noise environment in the vicinity of the existing plant can be described as relatively noisy, containing pure tones which can be particularly annoying. The noise environment in the vicinity of the existing plant is dominated by noise from the existing plant, primarily produced by fans, generators and transformers.

IMPACTS

Noise impacts associated with the project can be created by short-term construction activities, by demolition, and by normal long-term operation of the power plant.

PROJECT SPECIFIC IMPACTS — CONSTRUCTION

COMMUNITY EFFECTS

GENERAL CONSTRUCTION NOISE

Construction noise is usually considered a temporary phenomenon. In this case, the construction period for the MBPP includes three phases: demolition of the tank farm (a 3-month effort), construction of the new power plant and demolition of the existing 450-foot tall stacks (21 months), and dismantling of the existing power plant generation units (47 months). Construction and demolition of an industrial facility such as a power plant is typically noisier than permissible under usual noise ordinances. In order to allow the construction of new facilities, construction noise during certain hours is commonly exempt from enforcement by local ordinances. The City of Morro Bay Noise Element does not specifically regulate the permissible hours of construction, and does not have any specific noise limits regarding the hours during which construction is allowed.

The applicant has prepared a comprehensive analysis of construction noise impacts, listing predicted noise levels due to specific types of equipment and of generalized construction activities. The construction noise analysis results are summarized for the most-affected receptor locations during the busiest periods of construction (about 7 months) in **NOISE: Table 4**.

NOISE: Table 4 - Construction Noise Level Predictions

Receptor No.	Description	Daytime Ambient L_{eq}, dBA	Highest Construction Noise Level, dBA	Cumulative Noise Level, dBA	Change in Noise Level, dBA re: Ambient
1	Scott Avenue	50	54	55.5	+5.5
2	Morro Bay HS	60	50	60.4	+0.4
5	Morro Dunes RV Park	60	64	65.5	+5.5
10	Embarcadero	67	63	68.5	+1.5
11	Public Park	56	60	61.5	+5.5
12	Public Beach	62	52	62.4	+0.4
13	Morro Rock, East Side	52	53	55.5	+3.5

The predicted construction sound levels would result in cumulative noise levels up to 5.5 dBA higher than under the ambient conditions at three locations, the Scott Avenue residential area, the Morro Dunes RV Park, and the Public Park. These increases would be perceptible, and potentially significant. Because the increase in noise levels is of a temporary nature, and will be restricted to daytime hours by Condition of Certification **NOISE-8**, the noise effect of construction is considered to be insignificant.

The noise levels shown in **NOISE: Table 4** assumed the use of a "quieter" pile driving technique to install piles supporting the main equipment and building foundations. The applicant proposes to use auger cast piles, which are installed using a drilling technique, rather than using impact pile driving. The expected noise reduction from using this technique is 5 to 15 dBA (Duke 2000a, AFC § 6.12.2.1).

The applicant also analyzed the potential noise effects of haul trucks used during construction. The predicted noise levels due to truck traffic are shown by **NOISE: Table 5**. The predicted cumulative truck traffic noise levels would be considered insignificant.

NOISE: Table 5 – Truck Traffic Noise Level Predictions

Receptor No.	Description	Daytime Ambient L_{eq}, dBA	Highest Truck Noise Level, dBA	Cumulative Noise Level, dBA	Change in Noise Level, dBA re: Ambient
1	Scott Avenue	50	36	50.2	+0.2
2	Morro Bay HS	60	39	60	0
5	Morro Dunes RV Park	60	57	61.5	+1.5
10	Embarcadero	67	50	67.1	+0.1
11	Public Park	56	50	57.0	+1.0
12	Public Beach	62	34	62	0
13	Morro Rock, East Side	52	28	52	0

The predicted truck traffic noise levels assumed maintenance of proper speeds (25 mph), and limiting the use of truck engine brakes using administrative controls.

As noted above, the demolition of the tank farm, the existing stacks and the existing generation units will also be potentially significant sources of noise. The applicant has also prepared an analysis of noise associated with these aspects of the site activities. No explosives will be used for these demolition projects. Specifically, the removal of the fuel tanks and their foundations would probably involve saw or torch cutting of the tank shells, and pavement breaking of the foundations. Further, the stacks will be cut into several sections, and lifted off by a large crane. The remaining buildings are expected to be demolished with standard knock-down techniques and pavement breaking equipment (Duke 2000a, AFC § 6.12.2.1). The predicted tank demolition noise levels are shown by **NOISE: Table 6.**

NOISE: Table 6 – Tank Demolition Noise Level Predictions

Receptor No.	Description	Daytime Ambient L_{eq}, dBA	Highest Demolition Noise Level, dBA	Cumulative Noise Level, dBA	Change in Noise Level, dBA re: Ambient
1	Scott Avenue	50	49	52.5	+2.5
2	Morro Bay HS	60	45	60.1	+0.1

5	Morro Dunes RV Park	60	59	62.5	+2.5
10	Embarcadero	67	58	67.5	+0.5
11	Public Park	56	55	58.5	+2.5
12	Public Beach	62	47	62.1	+0.1
13	Morro Rock, East Side	52	48	53.5	+1.5

The analysis shows that the demolition of the tank is predicted to produce noise levels consistently below ambient noise levels at the nearest receptors. The cumulative noise levels would increase ambient noise levels by up to 2.5 dB. This activity would continue for about 3 months. Noise produced by the tank demolition is therefore expected to be insignificant.

The predicted power building and stack demolition noise levels are shown by **NOISE: Table 7**.

NOISE: Table 7 – Power Building/Stack Demolition Noise Level Predictions

Receptor No.	Description	Daytime Ambient L_{eq}, dBA	Highest Removal Noise Level, dBA	Cumulative Noise Level, dBA	Change in Noise Level, dBA re" Ambient
1	Scott Avenue	50	54	55.5	+5.5
2	Morro Bay HS	60	31	60	0
5	Morro Dunes RV Park	60	38	60	0
10	Embarcadero	67	72	73.2	+6.2
11	Public Park	56	64	64.6	+8.6
12	Public Beach	62	48	62.2	+0.2
13	Morro Rock, East Side	52	58	59.0	+7.0

The stack removal and power building removal will occur over a 47-month period. However, the periods of actual heavy equipment use would be some fraction of that time period. Potentially significant noise levels could be experienced at the Scott Avenue residential area, the Public Park, the Embarcadero, and the east side of Morro Rock. In this case, it is not clear that the stack removal and power building demolition will be "temporary." Thus, even though the demolition will be restricted to daytime hours by Condition of Certification **NOISE-8**, the noise effects of power building and stack demolition could be significant.

Energy Commission staff believes that it is important to ensure that noise due to this phase of construction is controlled to minimize increases in ambient noise levels at noise sensitive receptors. Therefore, staff has recommended Condition of Certification **NOISE-9**, which specifically addresses noise due to stack removal and power building removal.

Based upon the potential noise impacts of construction and demolition noise, the Energy Commission staff has recommended the inclusion of four Conditions of Certification (**NOISE-1**, **NOISE-2**, **NOISE-8,** and **NOISE-9**) to monitor and mitigate potential construction and demolition noise impacts.

Because construction/demolition activity and related traffic are regulated by the proposed Conditions of Certification, and are of limited duration, potential construction and demolition noise impacts to receptors in the MBPP project area are considered to be less than significant.

PILE DRIVING VIBRATION

Conventional pile driving produces potentially significant ground-borne vibration. The proposed use of auger-cast pile driving is not expected to produce a significant amount of vibration at the nearest receptors. It is not practical to prepare a preliminary study until the pile driving engineering plan has been prepared. For these reasons, the applicant has not provided a specific analysis of potential pile driving vibration effects. However, the potential for public annoyance or property damage due to pile driving vibration remains of concern.

Therefore, Energy Commission staff has recommended **NOISE-10** as a Condition of Certification, requiring specific vibration analysis and mitigation measures at the nearest receptors during pile driving activities.

STEAM BLOWS

Typically, the steam blows during construction and start-up create the loudest noise encountered during the construction phase. Steam blows are necessary after erection and assembly of the feedwater and steam systems because the piping and tubing that comprises the steam path accumulate dirt, rust, scale and construction debris such as weld spatter, dropped welding rods and the like. If the plant were to start up without thoroughly cleaning out the piping and tubing, all this debris would find its way into the steam turbine, quickly destroying the machine.

In order to prevent this, before the steam system is connected to the turbine, the steam line is temporarily routed to the atmosphere. High-pressure steam is then raised in the heat recovery steam generator (HRSG) or a temporary boiler and allowed to escape to the atmosphere through the steam piping. This flushing action, referred to as a steam blow, is effective at cleaning out the steam system. A series of short steam blows, lasting two or three minutes each, is performed several times daily over a period of two or three weeks. At the end of this procedure, the steam line is connected to the steam turbine, which is then ready for operation.

According to the applicant, un-silenced steam blow noise levels could be as high as 70 dBA to 74 dBA at the nearest receiver (Scott Avenue). With appropriate vent silencers, the noise levels could be reduced by 20 to 30 dBA, or to a level ranging from 40 to 44 dBA at the nearest residence (Duke 2000a, AFC § 6.12-5). The resulting noise levels would be in the range of ambient noise levels at the quietest time of night.

The applicant has proposed to mitigate the noise generated from construction steam blows by use of noise control steam system vents. Energy Commission staff proposes that any high pressure steam blows be muffled with an appropriate silencer to achieve the maximum noise level standard of the City of Morro Bay, and that they be performed only during daytime hours to minimize annoyance to residents (see proposed Condition of Certification **NOISE-4** below).

Energy Commission staff further proposes a notification process to make neighbors aware of scheduled steam blows (see proposed Condition of Certification **NOISE-5** below).

LINEAR FACILITIES

No new off-site linear facilities are proposed as part of this project.

WORKER EFFECTS

Duke does not specifically acknowledge the need to protect construction workers from noise hazards. The applicant does, however, recognize those applicable LORS that would protect construction workers, and commits in general to complying with them (Duke 2000a, AFC § 6.12.2.2). To ensure that construction workers are, in fact, adequately protected, Energy Commission staff has proposed Condition of Certification **NOISE-3**.

PROJECT SPECIFIC IMPACTS — OPERATION

COMMUNITY EFFECTS

The applicant has incorporated noise reduction measures into the design of the project to ensure that there will not be a substantial increase in noise levels at the nearest potentially affected receptor, which is the Morro Dunes RV Park. In addition, the applicant intends to achieve compliance with the noise performance standards of the Morro Bay Noise Element, which, because of the existing MBPP noise environment, is potentially more restrictive than the Energy Commission requirement to prevent a significant increase in background noise levels.

POWER PLANT OPERATION

During its operating life, the MBPP represents essentially a steady, continuous noise source day and night. Occasional brief increases in noise levels would occur as steam relief valves open to vent pressure, or during startup or shutdown as the plant transitions to and from steady-state operation. At other times, such as when the plant is shut down for lack of dispatch or for maintenance, noise levels would decrease.

The primary noise sources anticipated from the facility include the steam turbine generator, gas turbine generators, heat recovery steam generators, transformers, boiler feed pumps, and the circulating water pumps. Secondary noise sources are anticipated to include pumps, ventilation fans and compressors. The noise emitted by power plants during normal operations is generally broadband, steady state in

nature. The resulting hourly average noise levels are typically dominated by the steady-state noise sources.

Duke performed extensive acoustical calculations to determine the facility noise emissions, and to develop noise mitigation measures. The calculations were based on specific manufacturer noise data for the major equipment planned for the facility (Duke 2000a, AFC § 6.12.2.2). The modeling assumed that the new units would be operated at maximum load over a 24-hour period. This is quite conservative, as actual power generation requirements vary with the time of day and electrical demands. The modeling was performed as an iterative process to refine noise mitigation measures and requirements for equipment noise emission factors. Specific noise mitigation measures evaluated included:

- Selecting an effective plant layout
- Low-noise main transformers
- Baffles on the HRSG exhaust ducts
- Shroud enclosure at transition between GTG exhaust and HRSG inlet
- Noise reducing design of HRSG casing walls
- Low noise system steam vents, tanks and piping on the HRSG penthouse
- Low-noise boiler feedwater pump trains
- Enclosing noisy equipment within turbine buildings
- Enhanced acoustical properties for GTG and STG turbine building elements
- Retaining existing berms as noise barriers
- Adding a 20-foot high wall at the northernmost boundary of the site, with absorptive characteristics on the side facing the plant

NOISE: Table 8 lists the predicted project noise levels in terms of the background noise level (L_{90}) measured at times when the existing units at the MBPP were shut down or on standby.

NOISE: Table 8 – Summary of Predicted Noise Levels

Measurement Sites	Nighttime L_{90}, dBA			CNEL, dB*
	Ambient	Project	Cumulative	
1	41	41	44	50
2	42	36	43	49
3	42	35	43	49
4	42	37	43	49
5	40	43	45	51
6	43	38	44	50
7	40	33	41	47
8	36	31	37	43
* - Energy Commission staff estimates				

NOISE: Table 9 lists the predicted project noise levels in terms of the equivalent noise level (L_{eq}), which is the metric used in the Morro Bay Noise Element. In this table, the ambient background noise level (L_{90}) was measured at times when the existing units at the MBPP were shut down or on standby, to represent future conditions after the existing units are dismantled.

NOISE: Table 9 – Summary of Predicted Noise Levels

Measurement Sites	Nighttime Sound Level, dBA			Noise Standard, L_{eq}, dBA
	Ambient L_{90}	Project L_{eq}	Cumulative L_{eq}	
1	41	41	44	45
2	42	36	43	45
3	42	35	43	45
4	42	37	43	45
5	40	43	45	45
6	43	38	44	45
7	40	33	40	45
8	36	31	37	41

As a result of these analyses, Energy Commission staff believes that no significant noise impacts are likely to occur due to the operation of the project, as mitigated. The proposed Condition of Certification **NOISE-6** would ensure that the background noise level (L_{90}) at the most-affected residential receptor would not increase by more than 5 dBA, and that noise due to the plant operations would not exceed the standards of the Morro Bay Noise Element.

TONAL AND INTERMITTENT NOISES

One possible source of annoyance would be strong tonal noises. Tonal noises are individual sounds (such as pure tones) that, while not louder than permissible levels, stand out in sound quality. The applicant has stated that no strong tonal noises will be generated during the operation of the project.

The applicant has also stated that noise control steam system vents will be installed on the HRSG penthouse to mitigate the intermittent noise from pressure relief valves. The applicant estimated that the noise levels associated with the steam system vents would be in the range of 40 to 44 dBA at the receptors at Scott Avenue (Measurement Site 1). Emergency pressure safety valve (PSV) discharges would not be silenced. These safety devices are typically not silenced, and produce noise only under emergency conditions. Because these noise sources are expected to be in compliance with the LORS, their noise effects are considered to be insignificant.

To ensure that no strong tonal noises are present and that intermittent noises are mitigated, Energy Commission staff has proposed a Condition of Certification (**NOISE-6**, below), which requires the applicant to mitigate pure tones and the noise from steam relief valves.

LINEAR FACILITIES

No new off-site linear facilities are proposed as part of this project. In addition, the operation of the power plant will not create any incremental increase in noise levels from PG&E's high voltage transmission system (Duke 2000a, AFC § 6.12.2.2). Noise from the transmission lines will include a corona discharge hum, which is expected to be audible within 100 feet of the power lines. However, the nearest residences are located more than 100 feet from the transmission lines. As a result, no noise impacts are assumed to occur from linear facilities.

WORKER EFFECTS

The applicant recognizes the need to protect plant operating and maintenance personnel from noise hazards, and has committed to comply with applicable LORS (Duke 2000a, AFC § 6.12.2.2). Signs would be posted in areas of the plant with noise levels exceeding 85 dBA (the level that OSHA recognizes as a threat to workers' hearing), and hearing protection would be required. The applicant would implement a comprehensive hearing conservation program. To ensure that construction workers are, in fact, adequately protected, Energy Commission staff has proposed a Condition of Certification (**NOISE-7**, below).

CUMULATIVE IMPACTS

Section 15130 of the *CEQA Guidelines* (Cal. Code Regs., tit. 14) requires a discussion of cumulative environmental impacts. Cumulative impacts are two or more individual impacts that, when considered together, are considerable or that compound or increase other environmental impacts. The *CEQA Guidelines* require that the discussion reflect the severity of the impacts and the likelihood of their occurrence, but need not provide as much detail as the discussion of the impacts attributable to the project alone.

Pursuant to CEQA, a cumulative impacts analysis can be performed by either 1) summarizing growth projections in an adopted general plan or in a prior certified environmental document, or 2) compiling a list of past, present, and probable future projects producing related or cumulative impacts. The second method has been utilized for the purposes of this Staff Assessment.

There are no planned projects that could contribute to cumulative noise impacts in the project study area identified in the AFC (Duke 2000a). There are industrial noise sources north of the project site which could contribute to the cumulative noise levels at receptors in that direction. In addition, traffic noise levels are significant in the Highway 1 corridor. The effects of noise produced by those sources have been accounted for by the ambient noise level measurements, and the resulting noise levels are described in the noise level predictions listed above.

FACILITY CLOSURE

In the future, upon closure of the MBPP, all operational noise from the entire MBPP site would cease, and no further adverse noise impacts from operation of the MBPP would be possible. The remaining potential temporary noise source is the

dismantling of the structures and equipment, and any site restoration work that may be performed. Since this noise would be similar to that caused by the original construction of the MBPP, it can be treated similarly. That is, noisy work can be performed during daytime hours, with machinery and equipment properly equipped with mufflers. Any noise LORS that are in existence would apply; applicable Conditions of Certification included in the Energy Commission Decision would also apply unless modified.

CONCLUSIONS AND RECOMMENDATIONS

CONCLUSIONS

Energy Commission staff concludes that the MBPP will be built and operated to comply with all applicable noise laws, ordinances, regulations, and standards. Energy Commission staff further concludes that if the MBPP facility were designed as described above, and further mitigated as described below in the proposed Conditions of Certification, it is not expected to produce significant adverse noise impacts.

RECOMMENDATION

To ensure compliance with all applicable noise LORS, Energy Commission staff recommends adoption of the following proposed Conditions of Certification.

PROPOSED CONDITIONS OF CERTIFICATION

NOISE-1 At least 15 days prior to the start of project-related ground disturbing activities, the project owner shall notify all residents within one-half mile of the site, by mail or other effective means, of the commencement of project construction. At the same time, the project owner shall establish a telephone number for use by the public to report any undesirable noise conditions associated with the construction and operation of the project. If the telephone is not staffed 24 hours per day, the project owner shall include an automatic answering feature, with date and time stamp recording, to answer calls when the phone is unattended. This telephone number shall be posted at the project site during construction in a manner visible to passersby. This telephone number shall be maintained until the project has been operational for at least one year.

Verification: The project owner shall transmit to the Energy Commission Compliance Project Manager (CPM) in the first Monthly Construction Report following the start of project-related ground disturbing activities, a statement, signed by the project manager, attesting that the above notification has been performed, and describing the method of that notification. This statement shall also attest that the telephone number has been established and posted at the site.

NOISE-2 Throughout the construction and operation of the project, the project owner shall document, investigate, evaluate, and attempt to resolve all project related noise complaints.

Protocol: The project owner or authorized agent shall:

- Use the Noise Complaint Resolution Form (see Exhibit 1), or functionally equivalent procedure acceptable to the CPM, to document and respond to each noise complaint;
- Attempt to contact the person(s) making the noise complaint within 24 hours;
- Conduct an investigation to determine the source of noise related to the complaint;
- If the noise is project related, take all feasible measures to reduce the noise at its source; and
- Submit a report documenting the complaint and the actions taken. The report shall include: a complaint summary, including final results of noise reduction efforts; and, if obtainable, a signed statement by the complainant stating that the noise problem is resolved to the complainant's satisfaction.

Verification: Within 30 days of receiving a noise complaint, the project owner shall file a copy of the Noise Complaint Resolution Form, or similar instrument approved by the CPM, with the City of Morro Bay Planning Department, and with the CPM, documenting the resolution of the complaint. If mitigation is required to resolve a complaint, and the complaint is not resolved within a 30-day period, the project owner shall submit an updated Noise Complaint Resolution Form when the mitigation is finally implemented.

NOISE-3 Prior to the start of project-related ground disturbing activities, the project owner shall submit to the CPM for review a noise control program. The noise control program shall be used to reduce employee exposure to high noise levels during construction and also to comply with applicable OSHA and Cal-OSHA standards.

Verification: At least 30 days prior to the start of project-related ground disturbing activities, the project owner shall submit to the CPM the above referenced program. The project owner shall make the program available to OSHA upon request.

NOISE-4 If a traditional, high-pressure steam blow process is employed, the project owner shall equip steam blow piping with a temporary silencer that quiets the noise of steam blows to no greater than 70 dBA, measured at the Scott Avenue monitoring site, or at any other residential receptor. The project owner shall conduct steam blows only on weekdays during the hours of

7 a.m. to 6 p.m., unless the CPM agrees to longer hours based on a demonstration by the project owner that off-site noise impacts will not cause annoyance. If a low-pressure continuous steam blow process is employed, the project owner shall submit a description of this process, with expected noise levels and projected period of execution, to the CPM, who shall review the proposal with the objective of ensuring that the resulting noise levels do not exceed the ambient L_{90} plus 5 dBA. If the low-pressure process is approved by the CPM, the project owner shall implement it in accordance with the requirements of the CPM.

Verification: At least 15 days prior to the first high-pressure steam blow, the project owner shall submit to the CPM and the City of Morro Bay drawings or other information describing the temporary steam blow silencer and the noise levels expected, and a description of the steam blow schedule. At least 15 days prior to any low-pressure continuous steam blow, the project owner shall submit to the CPM drawings or other information describing the process, including the noise levels expected and the projected time schedule for execution of the process.

NOISE-5 At least 15 days prior to the first steam blow(s), the project owner shall notify the City of Morro Bay and all residents within one mile of the site of the planned steam blow activity, and shall make the notification available to other area residents in an appropriate manner. The notification may be in the form of letters to the area residences, telephone calls, fliers or other effective means. The notification shall include a description of the purpose and nature of the steam blow(s), the proposed schedule, the expected sound levels, and the explanation that it is a one-time operation and not a part of normal plant operations.

Verification: Within 5 days of notifying these entities, the project owner shall send a letter to the CPM confirming that they have been notified of the planned steam blow activities, including a description of the method(s) of that notification.

NOISE-6 The project design and implementation shall include appropriate noise mitigation measures adequate to ensure that operation of the project will not cause resultant noise levels to exceed the ambient background noise level (L_{90}) at residential receivers by more than 5 dBA, and that the noise due to plant operations will comply with the noise standards of the Morro Bay Noise Element. If a pure tone is present, the applicable noise standards shall be reduced by 5 dBA.

No single piece of equipment shall be allowed to stand out as a source of noise that draws legitimate complaints. Steam relief valves shall be adequately muffled to preclude noise that draws legitimate complaints.

Prior to initiating construction, the project owner will conduct a 25-hour community noise survey at the closest residential receptor (Morro Dunes RV Park), while the existing power plant is operating normally.

Within 30 days of the project first achieving a sustained output of 80 percent or greater of rated capacity, the project owner shall conduct short-term survey noise measurements at the Scott Avenue, Radcliff Street at Berwick Avenue, and Morro Bay High School monitoring sites. In addition, the applicant shall conduct a 25-hour community noise survey at Morro Dunes RV Park. The survey during power plant operations shall also include measurement of one-third octave band sound pressure levels at each of the above locations to ensure that no new pure-tone noise components have been introduced.

If the results from the two noise surveys (pre-construction vs. operations) indicate that the background noise level (L_{90}) at the most affected receptor has increased by more than 5 dBA for any given hour during the 25-hour period, or that the noise standards of the Morro Bay Noise Element have been exceeded (including the pure tone correction), mitigation measures shall be implemented to reduce noise to a level of compliance with these limits.

Verification: Within 15 days after completing the survey, the project owner shall submit a summary report of the survey to the City of Morro Bay Planning Department, and to the CPM. Included in the report will be a description of any additional mitigation measures necessary to achieve compliance with the above listed noise limits, and a schedule, subject to CPM approval, for implementing these measures. Within 15 days of completion of installation of these measures, the project owner shall submit to the CPM a summary report of a new noise survey, performed as described above and showing compliance with this condition.

NOISE-7 Within 30 days after the facility is in full operation, the project owner shall conduct an occupational noise survey to identify the noise hazardous areas in the facility. The survey shall be conducted by a qualified person in accordance with the provisions of Title 8, California Code of Regulations, sections 5095-5099 (Article 105) and Title 29, Code of Federal Regulations, section 1910.95. The survey results shall be used to determine the magnitude of employee noise exposure. The project owner shall prepare a report of the survey results and, if necessary, identify proposed mitigation measures that will be employed to comply with the applicable California and federal regulations.

Verification: Within 30 days after completing the survey, the project owner shall submit the noise survey report to the CPM. The project owner shall make the report available to OSHA and Cal-OSHA upon request.

NOISE-8 Heavy equipment operation and noisy construction or demolition work shall be restricted to the times of day delineated below:

Weekdays	7 a.m. to 6 p.m.
Weekends and Holidays	9 a.m. to 5 p.m.

Haul trucks and other engine-powered equipment shall be equipped with adequate mufflers. Haul trucks shall be operated in accordance with posted speed limits. Truck engine exhaust brake use shall be limited to emergencies.

Verification: The project owner shall transmit to the CPM in the first Monthly Construction Report a statement acknowledging that the above restrictions will be observed throughout the construction of the project.

NOISE-9 The project design and implementation shall include noise mitigation measures adequate to ensure that power building and stack demolition will not cause resultant noise levels to exceed the ambient background noise level (L_{90}) at residential receivers by more than 5 dBA.

Upon request by the CPM, the project owner shall conduct one-hour noise measurements during power building and stack demolition at the Scott Avenue, Radcliff Street at Berwick Avenue, and Morro Bay High School monitoring sites.

If the results from the noise survey indicate that noise due to the power building and stack demolition has caused the background noise level (L_{90}) at the most affected receptor to increase by more than 5 dBA for any given hour during the measurement period, mitigation measures shall be implemented to reduce noise to a level of compliance with this limit.

Verification: Within 15 days after completing the survey, the project owner shall submit a summary report of the survey to the City of Morro Bay Planning Department, and to the CPM. Included in the report will be a description of any additional mitigation measures necessary to achieve compliance with the above listed noise limits, and a schedule, subject to CPM approval, for implementing these measures. Within 15 days of completion of installation of these measures, the project owner shall submit to the CPM a summary report of a new noise survey, performed as described above and showing compliance with this condition.

NOISE-10 Upon commencement of pile driving, the project owner will conduct continuous vibration monitoring at the nearest residential receptor, and will continue the monitoring until the pile nearest that residence is installed. If the results from the vibration measurements indicate at any time that the pile driving vibration at the nearest receptor has exceeded the criterion value of a

peak particle velocity of 0.2 in/sec, mitigation measures shall be implemented immediately to reduce vibration to a level of compliance with this limit.

Verification: If vibration measurements indicate at any time that the pile driving vibration at the nearest receptor has exceeded the criterion value of a peak particle velocity of 0.2 in/sec, the operator shall notify the CPM immediately, and shall cease pile driving until a mitigation plan is developed and implemented. Within 30 days after completing the vibration measurements, the project owner shall submit a summary report of the measurements to the City of Morro Bay Planning Department, and to the CPM. Included in the report will be a description of any additional mitigation measures which were implemented to achieve compliance with the above listed vibration limits, as well as the vibration measurement data demonstrating compliance.

EXHIBIT 1 - NOISE COMPLAINT RESOLUTION FORM

Morro Bay Power Plant Project
(00-AFC-12)

NOISE COMPLAINT LOG NUMBER _____

Complainant's name and address:

Phone number: _____

Date complaint received: _____
Time complaint received: _____

Nature of noise complaint:

Definition of problem after investigation by plant personnel:

Date complainant first contacted: _____

Initial noise levels at 3 feet from noise source _____ dBA Date: _____

Initial noise levels at complainant's property: _____ dBA Date: _____

Final noise levels at 3 feet from noise source: _____ dBA Date: _____

Final noise levels at complainant's property: _____ dBA Date: _____

Description of corrective measures taken:

Complainant's signature: _____ Date: _____

Approximate installed cost of corrective measures: $ _____
Date installation completed: _____
Date first letter sent to complainant: _____ (copy attached)
Date final letter sent to complainant: _____ (copy attached)

This information is certified to be correct:

Plant Manager's Signature: _____

(Attach additional pages and supporting documentation, as required).

REFERENCES

Barnes, J.D., L.N. Miller, and E.W. Wood. 1976. *Prediction of Noise from Power Plant Construction*. Bolt Beranek and Newman, Inc., Cambridge, Massachusetts. Prepared for Empire State Electric Energy Research Corporation, Schenectady, New York.

Beranek, L.L., I.L. Ver. 1992. *Noise and Vibration Control Engineering: Principles and Applications*. John Wiley and Sons, August.

Caltrans. 1976. *Survey of Earth-Borne Vibrations Due to Highway Construction and Highway Traffic*. CA-DOT-TL-6391-1-76-20. Caltrans Transportation Research Laboratory. Sacramento, California.

City of Morro Bay. 1987. Noise Element of the City of Morro Bay General Plan, 1987.

Cunniff, Patrick F., *Environmental Noise Pollution*. John Wiley & Sons, 1992.

DHS (California Department of Health Services), Office of Noise Control. *Model Community Noise Control Ordinance*, 1977.

DUKE (Duke Energy Morro Bay LLC) 2000a. Application for Certification, Volumes 1a-1b, II-IV, Morro Bay Power Plant Project (00-AFC-12). Submitted to the California Energy Commission on October 23, 2000.

DUKE (Duke Energy Morro Bay LLC/Trump) 2001a. Transmittal from DUKE/Trump to CEC/Lewis RE Responses to CEC's February 9, 2001 Data Requests, dated and received at the California Energy Commission on March 9, 2001.

Edison Electric Institute. *Electric Power Plant Environmental Noise Guide*, 1984.

Federal Transit Administration. 1995. *Transit Noise and Vibration Impact Assessment*. DOT-T-95-16. Harris, Miller, Miller and Hanson, Inc. Burlington, Massachusetts.

Kryter, Karl D. *The Effects of Noise on Man*. Academic Press, N.Y., 1970.

Miller, L.N., E.W. Wood, RM. Hoover, A.R. Thompson, and S.L. Paterson. 1978. Electric Power Plant Environmental Noise Guide, Volume 1. Bolt Beranek and Newman, Inc., Cambridge, Massachusetts. Prepared for Edison Electric Institute, New York, New York.

Morro Bay Power Plant Project. 2000. Application for Certification, Morro Bay Power Plant (00-AFC-12), submitted to the California Energy Commission October 23, 2000.

Peterson and Gross (Peterson, Arnold P. G. and Ervin E. Gross, Jr.). *Handbook of Noise Measurement*, 7th ed. GenRad, Concord, MA., 1974.

Smith, B.J., R.J. Peters, S. Owens. 1996. *Acoustics and Noise Control*, 2nd Edition. Addison-Wesley. November.

State of California. 1990. General Plan Guidelines, Office of Planning and Research, June 1990.

State of California. 1977. Model Community Noise Control Ordinance, Office of Noise Control, April 1977.

U.S. EPA. 1971. *Community Noise*. Washington D.C., December 1971.

U.S. EPA. 1974. *Information on Levels of Environmental Noise Requisite to Protect Public Health and Welfare with an Adequate Margin of Safety*. 550/9-74-004. U.S. Environmental Protection Agency, Office of Noise Abatement and Control. Washington, DC.

U.S. EPA . 1978. *Protective Noise Levels, (Condensed Version of EPA Levels Document)* (No. PB82-138827).

NOISE: APPENDIX A
FUNDAMENTAL CONCEPTS OF COMMUNITY NOISE

To describe noise environments and to assess impacts on noise sensitive area, a frequency weighting measure, which simulates human perception, is customarily used. It has been found that A-weighting of sound intensities best reflects the human ear's reduced sensitivity to low frequencies and correlates well with human perceptions of the annoying aspects of noise. The A-weighted decibel scale (dBA) is cited in most noise criteria. Decibels are logarithmic units that conveniently compare the wide range of sound intensities to which the human ear is sensitive. **NOISE: Table A1** provides a description of technical terms related to noise.

Noise environments and consequences of human activities are usually well represented by an equivalent A-weighted sound level over a given time period (Leq), or by average day and night A-weighted sound levels with a nighttime weighting of 10 dBA (Ldn). Noise levels are generally considered low when ambient levels are below 45 dBA, moderate in the 45 to 60 dBA range, and high above 60 dBA. Outdoor day-night sound levels vary over 50 dBA depending on the specific type of land use. Typical Ldn values might be 35 dBA for a wilderness area, 50 dBA for a small town or wooded residential area, 65 to 75 dBA for a major metropolis downtown (e.g., San Francisco), and 80 to 85 dBA near a freeway or airport. Although people often accept the higher levels associated with very noisy urban residential and residential-commercial zones, they nevertheless are considered to be levels of noise adverse to public health.

Various environments can be characterized by noise levels that are generally considered acceptable or unacceptable. Lower levels are expected in rural or suburban areas than what would be expected for commercial or industrial zones. Nighttime ambient levels in urban environments are about seven decibels lower than the corresponding average daytime levels. The day-to-night difference in rural areas away from roads and other human activity can be considerably less. Areas with full-time human occupation that are subject to nighttime noise, which does not decrease relative to daytime levels, are often considered objectionable. Noise levels above 45 dBA at night can result in the onset of sleep interference effects (USEPA 1971). At 70 dBA, sleep interference effects become considerable.

In order to help the reader understand the concept of noise in decibels (dBA), **NOISE: Table A2** has been provided to illustrate common noises and their associated sound levels, in dBA.

NOISE: Table A1 Definition of Some Technical Terms Related to Noise	
Terms	**Definitions**
Decibel, dB	A unit describing the amplitude of sound, equal to 20 times the logarithm to the base 10 of the ratio of the pressure of the sound measured to the reference pressure, which is 20 micropascals (20 micronewtons per square meter).
Frequency, Hz	The number of complete pressure fluctuations per second above and below atmospheric pressure.
A-Weighted Sound Level, dBA	The sound pressure level in decibels as measured on a Sound Level Meter using the A-weighting filter network. The A-weighting filter de-emphasizes the very low and very high frequency components of the sound in a manner similar to the frequency response of the human ear and correlates well with subjective reactions to noise. All sound levels in this testimony are A-weighted.
L_{10}, L_{50}, & L_{90}	The A-weighted noise levels that are exceeded 10%, 50%, and 90% of the time, respectively, during the measurement period. L_{90} is generally taken as the background noise level.
Equivalent Noise Level, L_{eq}	The energy average A-weighted noise level during the Noise Level measurement period.
Community Noise Equivalent Level, CNEL	The average A-weighted noise level during a 24-hour day, obtained after addition of 4.8 decibels to levels in the evening from 7 p.m. to 10 p.m., and after addition of 10 decibels to sound levels in the night between 10 p.m. and 7 a.m.
Day-Night Level, L_{dn} or DNL	The Average A-weighted noise level during a 24-hour day, obtained after addition of 10 decibels to levels measured in the night between 10 p.m. and 7 a.m.
Ambient Noise Level	The composite of noise from all sources, near and far. The normal or existing level of environmental noise at a given location.
Intrusive Noise	That noise that intrudes over and above the existing ambient noise at a given location. The relative intrusiveness of a sound depends upon its amplitude, duration, frequency, and time of occurrence and tonal or informational content as well as the prevailing ambient noise level.

Source: California Department of Health Services 1976.

NOISE: Table A2 Typical Environmental and Industry Sound Levels			
Noise Source (at distance)	A-Weighted Sound Level in Decibels (dBA)	Noise Environment	Subjective Impression
Civil Defense Siren (100')	140-130		Pain Threshold
Jet Takeoff (200')	120		Very Loud
Very Loud Music	110	Rock Music Concert	
Pile Driver (50')	100		
Ambulance Siren (100')	90	Boiler Room	
Freight Cars (50')	85		
Pneumatic Drill (50')	80	Printing Press Kitchen with Garbage Disposal Running	Loud
Freeway (100')	70		Moderately Loud
Vacuum Cleaner (100')	60	Data Processing Center Department Store/Office	
Light Traffic (100')	50	Private Business Office	
Large Transformer (200')	40		Quiet
Soft Whisper (5')	30	Quiet Bedroom	
	20	Recording Studio	
	10		Threshold of Hearing

Source: Peterson and Gross 1974

Subjective Response to Noise

The adverse effects of noise on people can be classified into three general categories:

- Subjective effects of annoyance, nuisance, dissatisfaction.
- Interference with activities such as speech, sleep, and learning.
- Physiological effects such as anxiety or hearing loss.

The sound levels associated with environmental noise, in almost every case, produce effects only in the first two categories. Workers in industrial plants can experience noise effects in the last category. There is no completely satisfactory way to measure the subjective effects of noise, or of the corresponding reactions of annoyance and dissatisfaction, primarily because of the wide variation in individual tolerance of noise.

One way to determine a person's subjective reaction to a new noise is to compare the level of the existing (background) noise, to which one has become accustomed,

with the level of the new noise. In general, the more the level or the tonal variations of a new noise exceed the previously existing ambient noise level or tonal quality, the less acceptable the new noise will be, as judged by the exposed individual.

With regard to increases in A-weighted noise levels, knowledge of the following relationships (Kryter 1970) can be helpful in understanding the significance of human exposure to noise.

1. Except under special conditions, a change in sound level of one dB cannot be perceived.
2. Outside of the laboratory, a three dB change is considered a barely noticeable difference.
3. A change in level of at least five dB is required before any noticeable change in community response would be expected.
4. A ten dB change is subjectively heard as an approximate doubling in loudness and almost always causes an adverse community response.

Combination of Sound Levels

People perceive both the level and frequency of sound in a non-linear way. A doubling of sound energy (for instance, from two identical automobiles passing simultaneously) creates a three dB increase (i.e., the resultant sound level is the sound level from a single passing automobile plus three dB). The rules for decibel addition used in community noise prediction are:

NOISE: Table A3
Addition of Decibel Values

When two decibel values differ by:	Add the following amount to the larger value
0 to 1 dB	3 dB
2 to 3 dB	2 dB
4 to 9 dB	1 dB
10 dB or more	0
Figures in this table are accurate to ± 1 dB.	

Source: Thumann, Table 2.3

Sound and Distance

Doubling the distance from a noise source reduces the sound pressure level by six dB.

Increasing the distance from a noise source ten times reduces the sound pressure level by 20 dB.

Worker Protection

OSHA noise regulations are designed to protect workers against the effects of noise exposure, and list permissible noise level exposure as a function of the amount of time to which the worker is exposed:

NOISE: Table A4
OSHA Worker Noise Exposure Standards

Duration of Noise (Hrs/day)	A-Weighted Noise Level (dBA)
8.0	90
6.0	92
4.0	95
3.0	97
2.0	100
1.5	102
1.0	105
0.5	110
0.25	115

Source: OSHA Regulation

PUBLIC HEALTH

Obed Odoemelam, Ph.D.

INTRODUCTION

Operating the modernized Morro Bay Power Plant (MBPP) would expose the general public and workers to combustion by products as well as the toxic chemicals associated with other aspects of facility operations. The basic elements of this proposed modernization are more fully discussed in the **Air Quality** section to facilitate understanding of the general emission reductions (per unit of generated power) expected by the applicant Duke Energy Morro Bay, LLC from the use of the new state-of-the art generating units. The purpose of this public health analysis is to determine if the toxic emissions from the proposed project will have the potential to produce significant adverse public health impacts. If potentially significant health impacts are identified, staff would recommend mitigation as necessary for reduction below significant levels. The issue of possible worker impacts is addressed in the **Worker Safety and Fire Protection** section of this Preliminary Staff Assessment (PSA) while the health significance of exposure to the project-related electric and magnetic fields (EMF) is addressed in the **Transmission Line Safety and Nuisance** section.

Since this modernization project is proposed for a site with past and on-going industrial activities, the applicant has assessed the possibility of on-site chemical contamination at levels that could pose a human health or ecological hazard in the post-modernization period. This assessment was intended to determine whether specific remediation would be necessary before construction or project-related demolitions. Related findings are presented in the **Waste Management** section together with recommended waste management requirements.

The toxic pollutants of primary concern in this analysis are pollutants for which no air quality standards have been established. These are known as non-criteria pollutants, toxic air pollutants, or air toxics. They exist as volatile or semi-volatile organic compounds (VOCs), or as toxic metals. Those pollutants for which health-protective ambient air quality standards have been established are known as criteria pollutants. A project's ability to comply with these air quality standards is assessed in the **Air Quality** section. When any project is proposed for an area in violation of any of these standards, mitigation might be necessary to prevent significant additions to the existing levels. Since this project is proposed for an area with existing violations of specific air quality standards as noted by the applicant (Duke 2000a, page 6.2-3) and discussed in the **Air Quality** section, mitigation is recommended in that section

LAWS, ORDINANCES, REGULATIONS AND STANDARDS (LORS)

FEDERAL

THE CLEAN AIR ACT OF 1970 SECTION 112 (42 U.S. CODE, SECTION 7401 ET SEQ.)

This section of the act required establishment of ambient air quality standards to protect the public from the effects of air pollutants. These standards have been established by the United States Environmental Protection Agency (EPA) for the major criteria pollutants: nitrogen oxides (NOx), ozone, sulfur dioxide, carbon monoxide, sulfates, lead, and particulate matter with a diameter of 10 micron or less (PM10).

CLEAN AIR ACT OF 1970 SECTION 112 (42 U.S. CODE SECTION 7412)

This section requires new sources which emit more than 10 tons per year of any specified hazardous air pollutant (HAPs) or more than 25 tons per year of any combination of HAPs to apply the Maximum Achievable Control Technology (MACT).

STATE

CALIFORNIA HEALTH AND SAFETY CODE SECTION 39606

This section of the code requires the California Air Resources Board (ARB) to establish California's ambient air quality standards to reflect the California-specific conditions influencing its air quality. Such standards have been established by the ARB for ozone, carbon monoxide, sulfur dioxide, PM10, lead, hydrogen sulfide, vinyl chloride and nitrogen dioxide. The California standards are listed together with the corresponding federal standards in the **Air Quality** section.

CALIFORNIA HEALTH AND SAFETY CODE SECTION 41700

This section of the code states that "No person shall discharge from any source whatsoever such quantities of air contaminants or other material which cause injury, detriment, nuisance, or annoyance to any considerable number of persons or to the public, or which endanger the comfort, repose, health, or safety of any such persons or the public, or which cause or have a natural tendency to cause injury or damage business or property.

THE CALIFORNIA HEALTH AND SAFETY CODE SECTION 39650 ET SEQ.

This section of the code mandates that the California Environmental Protection Agency (Cal-EPA) establish safe exposure limits for toxic, non-criteria air pollutants and identify the best available methods for controlling their emission. These laws also require that the new source review rules of each air quality management district (AQMD or Air District) include regulations establishing procedures to control the emission of these pollutants. The toxic emissions from natural gas combustion are listed in ARB's California Toxic Emissions Factors (CATEF) database for natural

gas-fired combustion turbines to allow for uniform assessment of combustion sources. Cal-EPA has developed specific cancer potency estimates for assessing any cancer risk they may pose at specific exposure levels. To protect against the non-cancer effects of the toxic air pollutants, Cal-EPA established specific no-effects levels (known as reference exposure levels or RELs) for assessing the likelihood effects at specific exposure levels. Such health effects may be considered significant when exposure exceeds these reference levels. The Energy Commission staff (staff) uses these Cal-EPA potency estimates and reference exposure values in its health risk analyses.

CALIFORNIA HEALTH AND SAFETY CODE SECTION 44300 ET SEQ.

This section of the code requires facilities, which emit large quantities of criteria pollutants and any amount of non-criteria pollutants, to provide the local air district an inventory of toxic emissions. Operators of such facilities may also be required to prepare a quantitative health risk assessment to address the potential health risks involved. The ARB ensures statewide implementation of these requirements through the state's Air Districts.

LOCAL

Local implementation of the provisions of the Health and Safety Code section 44300 in the project area is ensured by the San Luis Obispo County Air Pollution Control District (SLOCAPCD), which established Rule 219 in this regard. The applicant has complied with the related Air District requirements by submitting a Health Risk Assessment as part of their permit application.

SETTING

As detailed in the information from the applicant, (Duke 2000a pages 6.9-10 and 6.9-11, PG&E 1997a, page 3-5), MBPP is within a 107-acre industrial complex in the city of Morro Bay in San Luis Obispo County. The immediate surroundings are zoned for light industry, commercial establishment, residential housing and recreational uses. The residential areas are to the northeast, east, and southeast with the nearest located adjacent to the site boundary along Scott Street and on neighboring streets approximately 900 feet from the edge of the building housing existing generation units 1-4. The surrounding commercial establishments include motels, shops, and tourism- and commercial fishing-related facilities.

The applicant has provided a listing of locations with sensitive receptors within a two-mile radius together with their respective distances from the site (Duke 2000a, pages 6.16-2 and 6.16-3). Sensitive individuals include children, pregnant women, the elderly, and the chronically ill who are more sensitive than the general population to the biological effects of environmental pollutants in general. They may be found in relatively small numbers in individual residences, or in relatively large numbers in specific establishments or institutions such as schools, daycare centers, retirement homes, hospitals, or recreation centers.

METHOD OF ASSESSING THE POTENTIAL IMPACTS OF TOXIC AIR POLLUTANTS

Any toxic air pollution-related health risks from operating the modernized MBPP would mainly be associated with emissions from its natural gas-fired turbines and supporting equipment consisting of diesel-fueled fire pumps and emergency generator, and a gasoline storage and dispensing facility. All this supporting equipment is already being used for the existing facility and will continue to be used after modernization (Duke 2000a, page 6.2-69). Other health impacts could be associated with emissions from demolition and construction activities.

For the surrounding population, the cancer and non-cancer operational impacts of such emissions are assessed from exposure estimates obtained for the new turbines from both air dispersion and exposure modeling. For these emissions, the potential for cancer is considered particularly important because of the present assumption by most scientists that there is no "safe" exposure to a carcinogen, meaning that every carcinogenic exposure is capable of a theoretical cancer risk. This non-threshold concept (as applied to carcinogenic effects) differs from present methods used to evaluate non-cancer effects, which are assumed to result only after exposure above levels that overwhelm the body's ability to protect against such impacts. The procedure for addressing such cancer and non-cancer impacts is known as a health risk assessment, which consists of the steps listed below:

- A hazard identification step in which each pollutant of concern is identified along with possible health effects;
- A dose-response assessment step in which the relation between the magnitude of exposure and the probability of effects is established;
- An exposure assessment step in which the possible extent of pollutant exposures from a project is established for all possible pathways by dispersion modeling; and
- A risk characterization step in which the nature and the magnitude of the possible human health risk is assessed.

HEALTH EFFECTS ASSESSED

The types of air toxics-related health impacts of concern in this analysis are those that can result shortly after exposure or following long-term (or chronic) exposure. Those that result from short-term exposure are known as acute effects and generally result from exposure at relatively high levels. Some examples of pollution-induced non-cancer health effects from acute or chronic exposure include headaches, dizziness, coughing, nausea, asthma, skin rash, and irritation of any part of the body such as the eyes, throat and skin. For the proposed and similar gas-fired facilities, high-level toxic exposures (at levels capable of acute effects) could occur only during major accidents, not during routine operations when emissions are much lower.

ESTIMATING THE RISK OF NON-CANCER EFFECTS

The method used by regulatory agencies to numerically assess the likelihood of acute or chronic impacts of air toxics or soil contaminants is the hazard index method. In this approach, a hazard index is calculated as a numerical representation of the likelihood of significant health impacts at the exposure levels expected for the source being considered. This index is calculated by dividing the exposure estimate by the applicable reference exposure level (RELs). These RELs are established by first identifying the lowest exposure levels capable of causing health effects and then applying specific safety factors to these levels to ensure protection against such effects in even the most sensitive individuals. Each REL is established from the health effects information available when the standard was set. (As more becomes known through further studies, the RELs are revised to ensure health protection). After calculating the hazard indices for the individual pollutants, these indices are added together for all those that affect the same part of the body or target organ, to obtain a total hazard index for the source. Total hazard indices of 1.0 or less are regarded as indicating a potential lack of significant health impacts while an index of more than 1.0 may indicate a significant potential for the non-cancer acute or chronic effects being considered.

ESTIMATING THE RISK OF CANCER

Since cancer is currently considered possible from every exposure to a carcinogen, staff considers the risk of cancer manifestation as more sensitive than the risk of non-cancer effects for assessing the environmental acceptability of a source of both carcinogens and non-carcinogens. This accounts for the prominence of theoretical cancer risk estimates in staff's environmental risk assessment process.

For any project, the risk of operations-related cancer is obtained by multiplying the exposure estimate by the potency factors for the individual carcinogens to be emitted. These potency factors are numerical values established to represent the cancer-causing potential of one carcinogen as compared to the others. After calculating these individual risk values, they are added together to obtain the total incremental cancer risk from operations. Given the previously noted conservatism in the this risk calculation process, these numerical estimates are best regarded as only representing the upper bounds on the cancer risk at issue. They should not be presented as the real risk, which will likely be lower and could indeed be zero. Since the same calculation process is used in all cases, these risk numbers are best used for (a) setting mitigation priorities, (b) choosing between competing control technologies, and (c) assessing the effectiveness of control measures. The significance of any specific estimates as indicators of a real cancer hazard is assessed according to specific evaluative criteria.

STAFF'S SIGNIFICANCE CRITERIA

Various state and federal agencies specify different cancer risk levels as trigger or significance levels for specific action in cases of emissions from specific sources. For example, many Air Districts have selected a risk of 10 in a million as a trigger level for public notification under Air Toxics "Hot Spots" (AB 2588) and the Proposition 65 programs. For projects with the Best Available Control Technology

(BACT) for air toxics (T-BACT) the SLOCAPCD considers a risk of 10 in a million as its significance criterion. However, the District specifies a significance level of 1 in a million under its rule 219 dealing with project modifications involving an increase in toxic emissions or a decrease in the distance to the nearest residence. When T-BACT is applied to such a source, the significance criterion of 10 in a million would apply.

Each cancer risk assessment may be conducted in two phases to first obtain a rough estimate of the cancer risk possible and then establish the need for specific action. In the first phase (which is the screening-level analysis), calculations are made using conservative, simplifying assumptions that tend to overestimate rather than underestimate the risk. If the estimates from this screening-level analysis are below 1 in a million, staff would regard the suggested cancer risk as de minimis or negligible and not warranting further analysis. If the estimate is above this 1 in a million level, a more refined analysis (using more accurate assumptions) might be necessary to assess the need for specific mitigation. In such a refined analysis, staff would recommend specific mitigation only when the risk estimate is 10 in a million or more. This limit-based regulatory approach is intended to prevent each identified source from significantly contributing to any increases in the already high (1 in 4, 25 %, or 250,000 in a million) background cancer risk of the average individual. The reasons for this high background cancer remain largely unknown. What has become clearer to scientists however, is that environmental pollution is responsible for only a small fraction of this risk. According to the South Coast Air Quality Management district (2000, page 2), this fraction represents only about two percent of cancer cases.

For non-carcinogenic pollutants, staff considers significant health impacts to be unlikely when the total hazard index is 1.0 or less. If more than 1.0, staff would regard the related emissions as potentially significant from an environmental health perspective. It would not automatically call for specific mitigation whose recommendation would depend on the index value involved.

IMPACTS

PROJECT SPECIFIC IMPACTS

The health impacts of the toxic air contaminants of primary concern in this analysis can be assessed separately as construction-phase impacts and operational-phase impacts.

CONSTRUCTION PHASE IMPACTS

As more fully discussed in the **Waste Management** section, PG&E (from whom the applicant purchased MBPP in 1998) remains responsible for the clean up of any site contamination associated with PG&E's operation of the facility. This responsibility applies to the entire site including the areas around the existing facility structures (the generating units, related building, and exhaust stacks). To assess the need for specific remediation, PG&E commissioned specific site assessment surveys (PG&E 1997and 1997b) to identify any locations of significant contamination. However, this

survey did not include the area underneath these demolition-bound structures. Any contamination in this area could involve not only the soil, but also the ground water below. For the rest of the site, the surveys identified nine specific locations (making up about 1% of the total plant site) in which soil contaminants might be encountered during site preparation and foundation-related excavations. The identified contaminants include petroleum hydrocarbons, volatile organic compounds and semi-volatile organic compounds.

For the remaining 99 % of the site, contaminant levels were found to be below levels posing a health hazard to area residents, ecosystems, and MBPP workers, meaning that construction would not pose a significant risk of contaminant exposure to construction workers. The most significant contaminants in this regard are arsenic, beryllium, benzo(a)pyrene, nickel, chlordane and petroleum hydrocarbons. These relatively low levels reflect the effectiveness of past remedial actions and existing contaminant prevention program at the site. These remedial actions were detailed in the site assessment information provided. Staff has recommended specific conditions of certification (**WASTE-4** and **WASTE-5**) in the **Waste Management** section to ensure that all hazardous materials are handled and removed without worker and public health impacts if encountered during construction in the nine identified locations or any other areas within the site.

Since the site survey did not include the area underneath the demolition-bound structures, staff has recommended a specific condition for certification (**WASTE-3**) in the **Waste Management** section to ensure that such an investigation is conducted before demolition is started. This condition would require the applicant to prepare a Remediation Investigation (RI) Workplan for the contaminant assessment and provided it to the San Luis Obispo County Environmental Health Department, the California Department of Toxic Substances Control Board, and the Energy Commission Compliance Project Manager (CPM) for review and approval. The Workplan should also include a specific procedure for contacting representatives of the San Luis Obispo County Environmental Health Department the California Department of Toxic Substances Control and the Central Coast Regional Water Quality Control Board for guidance and oversight in case of ground water contamination underneath these structures.

The other construction hazard of potential significance would result from demolition activities in which workers and area residents are exposed to the contaminants from the power building and the three 450-foot exhaust stacks to be demolished. The toxic materials of most concern in this regard include asbestos, waste oil, petroleum hydrocarbons, mercury and lead whose health impacts and potential hazards to area residents will be more fully discussed in the final staff assessment (FSA). The applicant (Duke 2000a, pages 2-79 through 2-81, and 6.14-18 and 6.14-19) recognizes this risk and intends, in the specific case of the stacks, to prevent air releases by (a) carefully cutting up these stacks instead of blowing them up with dynamite, and (b) implementing specific dust suppression measures in the structure destruction and removal process. This demolition management plan specifically consists of the following main steps:

- Erection of specific on-site enclosures to avoid releasing asbestos and other hazardous materials into the air;
- Material sorting to salvage specific building and other salvageable materials without human exposure to any toxic components;
- Sampling collection and analyses to establish the hazardous nature of generated wastes and applicable disposal methods; and
- Implementation of specific dust suppression measures to minimize exposure to dust or any dust-bound toxic contaminants.

Another construction health risk of potential significance would derive from worker or public exposure to the toxic emissions from the vehicles and equipment to be used. The applicant (Duke 2000a, page 6.2-7and Appendix 6.2) has identified the construction-phase vehicles and equipment to be used along with expected emission rates for the relatively short (21-month) period involved. The potential impacts of the criteria pollutants from such emissions are addressed in the **Air Quality** section (a) in terms of compliance with the applicable air quality standards and (b) requirements for specific mitigation. The toxic pollutants of primary concern in this analysis are those that originate from diesel exhaust. Potential ambient concentrations were modeled and provided by the applicant. Staff conservatively calculated the maximum cancer risk estimate to assess the maximum cancer risk possible from such emissions. This risk was calculated as 4.8, which is below the level staff regards as necessitating further mitigation.

One of the recommended conditions in the **Air Quality** section (**AQ-C2**) requires the use of specific post-exhaust controls to reduce the emission of diesel PM10, which is a criteria pollutant. Since such controls are also effective for the control of the non-criteria pollutants of concern, staff considers their use as additional protection against the minimal cancer and non-cancer risks associated with such emissions.

DIRECT OPERATIONAL IMPACTS

As noted in a report by the South Coast AQMD (2000, page 6), one characteristic that distinguishes the air toxics of primary concern in this analysis from the criteria pollutants (some of which are subject to further reactions in the course of dispersion) is that their impacts tend to be highest in close proximity to their sources and quickly drop off with distance from such sources. This means that the proposed project's air toxics levels would be highest immediately around it and decrease rapidly as one moves into the surrounding area, away from the points of maximum impacts.

The applicant estimated the cancer and non-cancer health risk of power generation at the modernized MBPP according to procedures specified in the 1993 California Air Pollution Control Officer's Association (CAPCOA) guidelines (Duke 2000a, pages 6.2-45, 6.2-46, and 6.2-67 through 6.2-69). The results from this assessment were provided to staff along with documentation of the assumptions used (Duke 2000a pages 6.2-9, 6.2-10, 6.2-68, 6.16-19 through 6.16-25, and Appendix 6.2). Such documentation was provided with respect to the following:

- Pollutants considered;
- Emission levels assumed for the pollutants involved;
- Dispersion modeling used to estimate potential exposure levels;
- Exposure pathways considered;
- The cancer risk estimation process;
- Hazard index calculation; and
- Characterization of project-related risk estimates.

Staff has found these assumptions to be acceptable and concur with the applicant's findings with regard to the numerical public health risk estimates expressed either in terms of the hazard index for each non-carcinogenic pollutant, or a cancer risk for estimated levels of the carcinogenic pollutants. These analyses were conducted to estimate the maximum potential for acute and chronic effects on body systems such as the liver, central nervous system, the immune system, kidneys, the reproductive system, the skin and the respiratory system.

The following toxic pollutants from gas combustion were considered with respect to cancer and non-cancer effects: acetaldehyde, acrolein, ammonia, benzene,1,3 butadiene, chrysene, diesel exhaust, ethylbenzene, formaldehyde, gasoline vapor, naphthalene, polycyclic aromatic hydrocarbons (PAHs), propylene oxide, toluene, and xylenes.

Although the modeling results indicate that maximum impacts from natural gas and diesel combustion occur at different locations, the applicant added their associated cancer risks together as a conservative way of presenting the maximum risk estimate possible in the project area. Such addition would be appropriate only when such impacts occur at the same location. Using this procedure, the applicant calculated a total risk of 0.17 in a million for the new project turbines. The risk from the 1-hour weekly testing of the existing diesel-fueled emergency generator (that will still be used) was calculated as 1.34 in a million. This would lead to a total risk estimate of 1.51 in a million for all facility sources (turbines and supporting equipment) in the post-modernization period. This post-modernization risk estimate is significantly below the 10 in a million significance level staff regards as necessary for mitigation above the ARB-specified T-BACT for such projects. It is also below the Air District's significance criterion of 10 in a million.

For non-carcinogenic pollutants, the maximum chronic hazard index of 0.041 was calculated for the maximally exposed individual. This is significantly below staff's significance criterion of 1.0, meaning that the project's toxic emissions would be at levels staff considers insignificant with respect to the chronic health impacts of concern. A maximum acute hazard index of 0.355 was calculated, also suggesting a potential lack of significant modernization-related impacts of an acute nature. The values for all sensitive receptor locations are much lower.

CUMULATIVE IMPACTS

When toxic pollutants are emitted from multiple sources within a given area, the cumulative, or additive, impacts of such emissions could, in theory, lead to significant health impacts within the population, even when such pollutants are emitted at insignificant levels from the individual sources involved. Analyses of such emissions have shown, however, that the peak impacts of such toxic pollutants are normally localized within relatively short distances from the source. Toxic pollutant levels beyond the point of maximum impact quickly fall within.

Staff has established from a list of proposed area projects (Duke 2000a, pages 6.1-4 through 6.1-13) that no new major sources of toxic pollutants are proposed near enough for the impact overlap necessary for significant impacts of a cumulative nature. The potential for such cumulative impacts is addressed in the **Air Quality** section with respect to the criteria pollutants.

CONCLUSIONS AND RECOMMENDATIONS

CONCLUSIONS

Staff does not consider the calculated risk estimate as suggesting a significant cancer risk from operating the proposed MBPP. This estimate is significantly below the levels for which specific mitigation is considered necessary by both staff and the Air District. Therefore, no cancer risk-based mitigation is necessary. The estimates for acute and chronic non-cancer risks also suggest a lack of significant non-cancer impacts.

RECOMMENDATIONS

Since the operation of the modernized MBPP would allow for more efficient power generation without significant health impacts, staff recommends approval with respect to the toxic pollutants of concern in this analysis. The conditions for ensuring compliance with all applicable air quality standards are specified in the **Air Quality** section for the area's problem criteria pollutants while the conditions for preventing any significant construction and demolition-related impacts are specified in the **Waste Management** section. No **Public Health** Conditions of Certification are recommended.

REFERENCES

California Air Resources Board (ARB) 1996. California Toxic Emissions Factors (CATEF) Database for Natural Gas-Fired Combustion Turbine Cogeneration.

California Air Pollution Control Officers Association (CAPCOA) 1993. Air Toxics "Hot Spots" Program, Revised 1992 Risk Assessment Guidelines. Prepared by the Toxics Committee, October 1993.

Duke (Duke Energy Morro Bay LLC) 2000a. Application for Certification, Volumes 1a-1b, II-IV, Morro Bay Power Plant Project (00-AFC-12). Submitted to the California Energy Commission on October 23, 2000.

PG&E (Pacific Gas and Electric Co.) Phase One Environmental Site Assessment, Morro Bay Power Plant, April 1997

PG&E (Pacific Gas and Electric Co.) 1997b Phase Two Environmental Site Assessment, Vol. 1, July 1997.

South Coast Air Quality Management District 2000. An Air Toxics Control Plan for the Next Ten Years. March 2000. South Coast Air Quality Management District publication.

SOCIOECONOMIC RESOURCES

Michael Fajans and Amanda Stennick

INTRODUCTION

The technical area of Socioeconomics includes several related areas of interest and concern. A typical socioeconomic impact analysis evaluates the effects of potential short-term and long-term project-related population changes on local housing, schools, medical and protective services, as well as the fiscal and physical capability of local governmental agencies to meet the needs of project-related changes in population. The socioeconomic analysis also includes consideration of Environmental Justice, a determination of whether any project impacts fall disproportionately on a low-income or minority population. This analysis discusses the potential direct and cumulative impacts of the proposed Morro Bay Power Plant Project (MBPP) on local communities, community resources, and public services.

LAWS, ORDINANCES, REGULATIONS, AND STANDARDS (LORS)

FEDERAL

Executive Order 12898, "Federal Actions to address Environmental Justice (EJ) in Minority Populations and Low-Income Populations," focuses federal attention on the environment and human health conditions of minority communities and calls on agencies to achieve environmental justice as part of this mission. The order requires the US Environmental Protection Agency (EPA) and all other federal agencies (as well as state agencies receiving federal funds) to develop strategies to address this issue. The agencies are required to identify and address any disproportionately high and adverse human health or environmental effects of their programs, policies, and activities on minority and/or low-income populations.

Civil Rights Act of 1964, Public Law 88-352, 78 Stat.241 (Codified as amended in scattered sections of 42 U.S.C.) Title VI of the Civil Rights Act prohibits discrimination on the basis of race, color, or national programs in all programs or activities receiving federal financial assistance.

STATE

CALIFORNIA GOVERNMENT CODE, SECTIONS 65996-65997

As amended by SB 50 (Stats. 1998, ch. 407, sec.23), these sections state that public agencies may not impose fees, charges, or other financial requirements to offset the cost for school facilities.

14 CALIFORNIA CODE OF REGULATIONS, SECTION 15131

- Economic or social effects of a project shall not be treated as significant effects on the environment.

- Economic or social factors of a project may be used to determine the significance of physical changes caused by the project.
- Economic, social and particularly housing factors shall be considered by public agencies together with technological and environmental factors in deciding whether changes in a project are feasible to reduce and or avoid the significant effects on the environment.

SETTING

PROJECT LOCATION

The proposed project is at the site of the existing Morro Bay Power Plant in the City of Morro Bay, California. The project site is in the western side of town, between Highway 1 and the Morro Bay shoreline. For a more complete description of the location, please refer to the **PROJECT DESCRIPTION** section of this document and the facility location section of the Application for Certification (Duke Energy Morro Bay Power Plant Project, AFC, Section 2). The study area for socioeconomics includes areas within a one-way commuting distance of about two hours. This area includes San Luis Obispo County, Monterey County, northwestern Santa Barbara County, including the City of Santa Maria, and western Kern County, including the City of Bakersfield.

DEMOGRAPHIC CHARACTERISTICS

According to preliminary Census 2000 results, San Luis Obispo County had a population of 246,681, an increase of 13.6 percent from the approximately 218,000 population from the 1990 Census. Only 58 percent of the county population lives in the seven incorporated cities, with many people living in the county jurisdiction.

The comparable numbers for the City of Morro Bay were 10,350 in 2000, approximately six percent above the 9,802 people counted in the 1990 Census. In addition to Morro Bay, the unincorporated communities of Baywood, Los Osos, and Cayucos are also located within a six-mile radius of the project site. As shown in **SOCIOECONOMICS TABLE 1**, their combined population was 27,000 in 1990, with Baywood-Los Osos responsible for just over half the population. These communities together accounted for about 12 percent of the San Luis Obispo County population in 1990.

Santa Barbara County has a population of approximately 410,000 people, of whom about 120,000 live in the northern Santa Barbara County cities of Guadalupe, Lompoc, and Santa Maria.

SOCIOECONOMICS TABLE 1 shows 1990 demographic characteristics for the communities in proximity to the Morro Bay Power Plant, and also indicates County averages or totals. Compared to San Luis Obispo County averages, the population of the nearby communities had fewer minority residents (88-95 percent non-Hispanic White) and a lower proportion of Hispanic residents, 3.5-8 percent, compared to a County population of 12.4 percent. The proportion of the population

living in poverty status ranged from 7.2 percent in Baywood-Los Osos to 10 percent in Morro Bay, slightly below the 1990 County average of 12.1 percent. Although the median household income in Morro Bay, at $26,000, was below the County average, this was probably accounted for by the substantial elderly population in Morro Bay. Almost 27 percent of the residents were 65 years old or more, which is double the elderly population percentage of the County. 2000 Census data on income and age is not yet available.

SOCIOECONOMICS TABLE 1
Demographic Profile of Nearby Communities:1990 & 2000

	1990				2000	
Race/ethnicity	Morro Bay	Baywood -Los Osos	Cayucos	San Luis Obispo County	Morro Bay	San Luis Obispo County
Total population	9,802	14,377	2,822	217,162	10,350	246,681
White (excluding Hispanic)	92.9%	88.0%	95.2%	81.6%	83.4%	76.1%
Black	.8%	.4%	.6%	2.3%	.6%	1.9%
American Indian	1.6%	.8%	.3%	.9%	.8%	.6%
Asian	1.9%	3.9%	.4%	2.8%	1.7%	2.6%
Other/2 or more(2000)	2.8%	.1%	0%	.1%	2.0%	2.4%
Hispanic origin (1)	8.0%	7.0%	3.5%	12.4%	11.4%	16.3%
Median Household Income (1989)	$26,049	$35,392	$31,481	$31,164	N.A.	N.A.
% Poverty status	10.0%	7.2%	7.5%	12.1%	N.A.	N.A.

Source: Dept. of Finance Demographic Unit. 1990 & 2000 Census
(1) Hispanic total (1990) includes several race categories, so totals do not add up to 100%

EMPLOYMENT AND ECONOMIC CHARACTERISTICS

The existing San Luis Obispo County labor force includes approximately 115,000 people; the current unemployment rate is three percent, so there are about 111,000 jobs in the County. About 15,000 are in the Baywood-Los Osos, Cayucos, or Morro Bay area.

Leading industrial categories in San Luis Obispo County are services, with 24,000 jobs in January 2001, construction trade with 23,600, and government with 22,400 jobs. There were 5,400 workers employed in construction in the County (EDD), a substantial reduction from the 8,800-construction industry employment reported by the 1990 Census. **SOCIOECONOMICS TABLE 2** shows the distribution of employment by industrial sector for San Luis Obispo County. There has not been a significant increase in countywide employment in recent years.

SOCIOECOMICS TABLE 2.
Employment by Industry: January 2001

Sector	San Luis Obispo County
Agriculture/mining	4,200
Construction	5,400
Manufacturing	7,500
Transportation/Public Utilities	4,900
Construction Trade	23,600
Finance/Insurance Real Estate	4,900
Services	23,900
Government	22,400
Total	96,800

Sources: California EDD, March 2001. Note: employment by place of work, excludes self-employed.

The existing MBPP employs approximately 75 people (AFC, page 6.10-38). Because the project replaces the existing units, there will be no need to hire additional operational employees. Businesses immediately adjacent to the project site include a Pacific Gas and Electric substation, restaurants along the Embarcadero, and the City Corporation Yard and a RV storage facility.

HOUSING

The following discussion reflects concerns from the City of Morro Bay that construction workers may impact housing, including seasonal rentals.

As of January 2000, Morro Bay had 6,113 housing units, including 3,950 single family detached units, 1,366 attached units, and 797 mobile homes. Of the total, 4,807 were occupied, yielding a 21 percent vacancy rate. However, most of the vacant units are second homes or recreational property that are not available for rent. According to those familiar with the Morro Bay housing market, there are few vacant housing units available on the market.

The San Luis Obispo countywide housing supply is approximately 101,000 units, of which 65 percent are detached units and 11 percent are mobile homes. The overall vacancy rate was 11 percent countywide, but it is difficult to know how many of the vacant units are second homes, since Pismo Beach has a vacancy rate of 18 percent, almost as high as Morro Bay (DOF). The five percent vacancy rate in San Luis Obispo may be a more accurate measure of true housing vacancy.
In addition to the standard housing stock, Morro Bay, as a seasonal recreational destination, also has a supply of motels, short-term recreational vehicle (RV) parks and campgrounds. There are currently 768 motel rooms available in Morro Bay, 2,200 additional units in San Luis Obispo, and a total of approximately 8,600 in the County. Demand peaks during the summer and weekends, with more availability in winter and weekdays. For the Morro Bay motels, annual occupancy averaged 67.5 percent during 2000, with occupancy rates of more than 90 percent for July and

August (AFC, response to data request # 83). On average, 250 motel units are available. From November through March, more than 300 rooms were available on average. Only from June through September is average availability less than 200 rooms, with a low of 74 rooms vacant during July and 68 in August.

Other potential temporary housing resources include temporary RV parks and campgrounds. There are approximately 400 temporary RV spaces in Morro Bay, and 260 camping spaces, the latter primarily in Morro Bay State Park and Morro Strand State Beach. These locations fill up during July and August, but generally have a few hundred available spaces during off-peak periods. A small number of habitation permits are also granted for "liveaboards" on vessels in Morro Bay harbor. However, these are severely limited and subject to a long waiting list.

SCHOOLS

The San Luis Coastal Unified School District provides K-12 education for San Luis Obispo, Morro Bay, and the nearby unincorporated area. The closest school to the project site is Morro Bay High School, approximately 2,000 feet north at 235 Atascadero Road, just west of Highway 1. Morro Elementary School, at 1130 Napa Avenue, is located about 3,000 to 4,000 feet southeast of the power plant site. While the high school enrollment is at capacity, there is excess capacity available at the elementary school level.

UTILITIES, EMERGENCY, AND OTHER SERVICES

Natural gas is provided to the project site via PG&E's Pipeline 306 from the Kettleman Compressor Station (AFC, page 2-30), and PG&E provides electricity to the site and community. The Southern California Gas Company provides natural gas to residents in the City of Morro Bay. The primary local telephone provider is Pacific Bell.

The City of Morro Bay provides water and sewer service within the city limits. However, the present MBPP provides its own potable water supply via on-site wells. Cooling water for the generation turbines is taken from Morro Bay and returned to the ocean.

Police protection is provided by the Morro Bay Police Department, with 20 sworn officers plus a support staff. Other public protection is provided by the San Luis Obispo County Sheriff's Department, which provides service to the unincorporated area and the City of Morro Bay via a mutual aid agreement with the City. The California Highway Patrol has jurisdiction over traffic matters in the unincorporated county as well as on state highways.

The closest hospitals are in San Luis Obispo, approximately 12 miles from the MBPP site. Sierra Vista Regional Medical Center, French Hospital, and San Luis Obispo General Hospital together provide all needed functions, including 24-hour emergency rooms.

Fire protection is provided by the Morro Bay City Fire Department, which operates from a primary station on Harbor Street in downtown Morro Bay, approximately

4,000 feet from the MBPP. A second station north of the MBPP contains additional equipment that can be utilized for reserve or off-duty personnel to respond to if called in for emergencies. The Department is staffed by nine full-time fire suppression personnel (three on duty at all times) plus a chief. Eight of the nine are paramedics. In addition, the Department has a staff of 12-20 reserve firefighters, approximately half of whom are also paramedics. The latter are called in for large-scale incidents or to handle a second incident (Jones).

Plant operations formerly included an internal fire brigade, which was disbanded when the plant shifted to operate exclusively on natural gas fuel. In exchange for additional fire protection service from the City and special training required, Duke Energy assists the Department to enhance its capability (AFC, page 6.10-21). For 2001, this contribution is $28,000, which will increase $1,000 per year through 2003 (Jones).

FISCAL AND FINANCIAL

The existing Morro Bay Power Plant is a major financial factor for the City of Morro Bay, providing jobs for residents, and is a major fiscal factor, paying both property taxes and natural gas franchise fees which are major revenue sources for the City. The current plant pays approximately $1.1 million annually in property taxes, of which the majority (61 percent) goes to schools and colleges, 23 percent goes to the County general fund and approximately 12 percent, or $131,000 goes to the City of Morro Bay. This would represent about eight percent of the City's property tax revenue, based on the estimated property tax revenue for FY 2000-2001 (Morro Bay Finance Dept.). Since Duke Energy purchased the plant and buys natural gas, the company also pays natural gas franchise fees of $450,000 to 650,000 annually to the City.

The City of Morro Bay has expressed concerns that the presence of the plant reduces tourism in Morro Bay. Transient occupancy taxes have risen in recent years at a rate comparable to those of other San Luis Obispo County communities, which implies that the plant has not adversely affected tourism (AFC, page 6.10-3). Since the plant pre-dates significant tourism in the area, it is speculative to estimate what the community would be like without it.

IMPACTS

PROJECT-SPECIFIC IMPACTS

Staff reviewed the Duke Energy Morro Bay Power Plant Project Application for Certification, dated October 2000, as well as the responses to data adequacy requests dated March 7 and April 9, 2001. Additionally, staff requested and reviewed a demographic research analysis from the marketing firm Claritas, Inc. The analysis was specific to the projected year 2000 demographic profile of the area within a six-mile radius of the MBPP site. The applicant used appropriate public databases in the analysis contained in the AFC. Staff's analysis is based on verification of the information in the AFC and independent research.

EMPLOYMENT

Given the need to remove the onsite tank farm prior to constructing the new plant, and the demolition of the existing large stacks and removal of existing units 1 through 4 after the new plant is completed and operating, the construction period will occur over an approximately six year period. The peak construction labor requirement is estimated at 831 workers on two shifts, which is expected to occur during the 13th month of construction. The number of workers is expected to exceed 600 workers for six months and exceed 200 workers for a 12 month period, months 6 through 17 of the process (AFC, page 6.10-32 and Figure 6.10-4). **SOCIOECONOMICS TABLE 3** shows the distribution of workers by craft over the construction effort.

The six-month peak construction employment of more than 600 workers represents a significant proportion of all construction jobs in San Luis Obispo County (11%) but because the one-way commute distance for construction workers is two hours, the labor pool extends to portions of Santa Barbara and Kern Counties. Thus, little difficulty is expected in finding a construction labor force within commute distance for the proposed project, and few workers would be expected to relocate to Morro Bay or San Luis Obispo as a result of the project.

SOCIOECONOMICS TABLE 3.
Number of Construction Workers by Month: Morro Bay Power Plant Project (Construction)

Craft	Month of Construction																						
	1	2	3	4	5	6	7	8	9	10	11	12	13	14	15	16	17	18	19	20	21	22	23
	Number of Workers																						
Boilermaker	0	0	0	0	0	0	0	0	0	3	42	48	48	47	55	63	55	26	16	8	2	0	0
Carpenter	4	4	4	0	23	35	46	47	53	69	62	53	59	58	66	72	47	18	7	4	2	0	0
Clerk/administration	3	3	8	9	29	14	10	7	9	9	11	8	8	8	9	10	9	4	4	2	2	3	3
Electrician	4	2	4	0	12	6	23	65	79	94	111	149	184	176	158	139	43	22	15	8	7	6	4
Engineering Management	6	6	15	11	35	35	28	36	46	42	57	68	73	62	62	55	40	22	11	9	10	8	9
Equipment Operator/Teamster	6	6	20	12	24	78	59	37	81	129	114	102	115	112	112	70	43	14	6	3	1	0	0
Iron Worker	4	8	4	0	16	25	46	53	60	58	114	126	120	109	76	9	8	0	0	0	0	0	0
Laborer	4	4	7	7	30	40	46	43	72	103	85	79	94	92	108	123	86	30	13	7	7	2	2
Millwright	0	0	0	0	0	5	11	10	11	9	34	63	85	84	94	81	44	20	5	3	2	0	0
Pipe Fitter	4	2	2	0	0	5	23	18	38	54	59	46	45	45	37	25	10	5	0	1	1	1	1
Total Workers Onsite	35	35	64	39	169	242	291	317	450	571	688	741	831	793	778	647	385	161	77	44	34	19	19

Craft	Month of Construction																						
	26	27	28	29	30	31	32	33	34	35	36	37	38	39	40	41	42	43	44	45	46	47	48
	Number of Workers																						
Boilermaker	0	0	0	0	0	0	0	2	2	2	2	2	2	2	2	2	2	2	2	3	3	3	3
Carpenter	0	0	0	0	4	6	6	8	8	8	6	7	5	5	5	2	2	2	2	2	0	0	0
Clerk/administration	2	3	3	4	4	4	4	4	4	4	5	5	4	4	4	4	4	4	4	4	3	3	3
Electrician	0	0	0	0	2	2	2	4	4	4	4	4	3	3	3	2	2	2	3	4	4	4	4
Engineering Management	5	6	6	7	7	7	7	8	9	9	14	13	12	12	12	9	7	7	7	8	6	6	6
Equipment Operator/Teamster	0	0	0	0	1	4	4	8	12	16	14	16	16	16	16	16	14	14	16	20	22	27	27
Iron Worker	0	0	0	2	2	3	3	3	4	4	4	6	6	6	6	2	2	2	4	6	10	10	10
Laborer	2	4	5	5	6	8	12	14	14	14	10	12	12	12	12	11	10	10	10	11	12	12	12
Millwright	0	0	2	2	2	2	2	4	4	4	4	4	2	2	2	0	0	0	0	0	0	0	0
Pipe Fitter	0	0	2	2	2	2	2	4	5	5	7	7	6	6	6	4	4	4	4	6	6	8	8
Total Workers Onsite	9	13	18	22	30	38	42	59	66	70	70	76	68	68	68	52	47	47	52	64	66	73	73

SOCIOECONOMICS TABLE 3 (continued)
Number of Construction Workers by Month: Morro Bay Power Plant Project (Demolition)

Craft	Month of Construction																							
	49	50	51	52	53	54	55	56	57	58	59	60	61	62	63	64	65	66	67	68	69	70	71	72
	Number of Workers																							
Boilermaker	2	2	0	0	0	0	0	0	0	0	0	0	0	0	0	0	0	0	0	0	0	0	0	0
Carpenter	0	4	4	4	3	4	4	2	4	4	4	2	4	2	2	2	2	2	2	2	2	2	2	2
Clerk/administration	3	3	1	1	1	1	1	1	1	1	1	1	1	0	0	0	0	0	0	0	0	0	0	0
Electrician	4	4	2	0	0	0	0	0	0	0	0	0	0	0	0	0	0	0	0	0	0	0	0	0
Engineering Management	5	4	4	3	3	5	5	5	5	5	5	5	4	3	3	3	3	3	3	3	3	3	4	4
Equipment Operator/Teamster	23	23	23	18	13	18	20	9	11	20	13	9	4	2	2	2	2	2	2	2	2	2	2	2
Iron Worker	8	8	6	3	3	6	6	3	6	6	6	3	3	0	0	0	0	0	0	0	0	0	0	0
Laborer	8	12	8	6	6	6	6	4	6	6	8	4	4	2	2	2	2	2	2	2	2	2	4	4
Millwright	0	0	0	0	0	0	0	0	0	0	0	0	0	0	0	0	0	0	0	0	0	0	0	0
Pipe Fitter	2	2	0	0	0	0	0	0	0	0	0	0	0	0	0	0	0	0	0	0	0	0	1	1
Total Workers Onsite	55	62	48	35	29	40	42	24	33	42	37	24	20	9	9	9	9	9	9	9	9	9	13	13

Source: Applicant response to data requests 88 and 89.
Note: No construction months 24 and 25.

SOCIOECONOMICS TABLE 4 provides an analysis of labor force availability. There are three trades identified where the project demand will exceed the local supply of workers: boilermakers, ironworkers, and millwrights. For boilermakers, the peak demand will require 63 workers during month 16, 23 more than are available in the area. The greatest local worker shortage will occur for ironworkers, where a maximum need of 126 workers compares to a supply of 40 available residing with the three county commute area. Finally, there are 60 millwrights in the labor force, and the plant construction will require 94 during the 15th month of construction. For all these trades, there will be an 11-month period when from 6 to 113 workers may seek temporary weeknight housing. For only five of these months will there be more than 50 workers needing temporary housing.

The demolition of the existing plant, including the stacks, may require up to four years, including the salvaging of usable components, but would require an average of 38 workers over the period, with a peak of 80 workers during the demolition phase (AFC, page 6.10-31). Because of the available labor pool within a two-hour commute distance of the project, this level of employment would not have a significant impact on available local labor.

The permanent employment associated with the proposed project (approximately 75 workers) would be about the same as the current labor force – transferred from working on present Units 1 through 4. This will not have a significant impact on the Morro Bay labor force.

SOCIOECONOMICS TABLE 4.
Maximum Contruction Labor Needs and Local Works by Craft

Craft	Maximum number of workers needed By craft	Total workers in San Luis Obispo & Santa Barbara Counties by craft	Worker demand exceeds local supply	
			Maximum needed in excess of local supply	Months of construction
Boilermaker	63	40	23	11-17
Carpenter	72	1,000	--	--
Clerk/administration	29	500+	--	--
Electrician	184	500	--	--
Engineering management	73	400	--	--
Equipment Operator/ teamster	129	1,200	--	--
Iron Worker	126	40	86	7-15
Laborer	123	500	--	--
Millwright	94	60	34	12-16
Pipe Fitter	59	225	--	--

Source: Applicant based on surveys of local trades unions.

HOUSING

As stated previously, construction of the proposed project is not expected to result in a significant number of workers moving to the area for construction or permanent jobs. Morro Bay has some housing turnover although a low actual vacancy rate. However, mobile home, RV parks, and motels also provide temporary living opportunities. As stated in the setting section, there is good availability of temporary RV space and motels for nine months of the year, with the availability more limited during summer. However, this limitation is offset by the 16,000-student Cal Poly San Luis Obispo campus, which creates a substantial rental availability in San Luis Obispo during summer.

As stated above, during a limited time, there is the potential for construction workers in particular trades to temporarily relocate to Morro Bay. However, their presence is likely to be primarily on weeknights, when demand for transient housing is lower than on weekends. Thus, the presence of temporary housing demand generated by a limited number of construction workers is expected to be a positive rather than negative influence on the Morro Bay and/or San Luis Obispo transient housing stock.

SCHOOLS

Few temporary workers are expected to move to and/or bring families to Morro Bay during the construction period. Thus, there is not expected to be any impact on the need for school facilities. One-time school impact fees would not be generated by the project since no additional square footage will be added (AFC, page 5.10-9).

UTILITIES, EMERGENCY AND OTHER SERVICES

Pacific Gas and Electricity currently provides natural gas to the MBPP via a pipeline from Kettleman. Since the proposed project will replace an existing power plant, the existing natural gas line will be shifted to the new plant with no impact. Cooling water for the proposed facility will be taken from Morro Bay and returned to the Pacific Ocean at Estero Bay through existing pipes, again replacing the existing plant. Total cooling water supply will be reduced approximately 30 percent (AFC, page 2-27). Water for process use and potable water for plant personnel will be provided by the onsite wells that supply the current plant. Consumption rates will be higher during construction than on-going operations, as it is presently during maintenance periods. An adequate supply is available. Sanitary sewer flow to the Morro Bay sanitary sewage system and treatment plant will be slightly reduced over current levels. Portable toilets will be used during the construction period to minimize temporary impacts to the City's sewage treatment system.

In terms of public safety, the security fence around the MBPP will remain in place and security guards will control access during the construction as well as operational phase.
The applicant has agreed to assist the City in providing additional police and fire department staffing and equipment during the construction period in order to address
staffing shortfalls. The "Fire Safety and Police Services Program" addresses the following concerns:

- Emergency response [fire], if required.
- Plan check responsibilities once construction plans are available.
- "Command and Control" and overall management responsibilities.
- Inspection and training requirements.
- Police emergency services, if required.
- Construction traffic management. (AFC, page 6.10-37).

For the Police Department, Duke will support a Traffic Officer and provide overtime support during the construction period. Functions will include: traffic management at key intersections, particularly during shift change and major deliveries; coordination with onsite security; liaison between the Police Department and the applicant (AFC, Appendix 6.10-5, page 9). The estimated approximate cost is $285,000, with payment to be initiated with the removal of the tanks and beginning of construction.

For the Fire Department, Duke will provide approximately $2.5 million to retain a fire marshal, four additional fire fighters, equipment, facility improvements, professional development training, and plan review services. Funding for the equipment and facility improvements will be front-loaded during the first year of construction, but the remaining funding will be spread over the six-year construction period. (AFC, Appendix 6.10-5, page 4).

The $2.5 million and the $285,000 mitigation funds are reflected in Socioeconomics Condition 2. The sum identified in that Condition also includes funds for traffic impact mitigation, for a total of $3,028676. The potential traffic impact is discussed in the **TRAFFIC AND TRANSPORTATION** section.

PUBLIC FINANCE AND FISCAL

Construction of the proposed project will generate one-time sales tax receipts, but since the majority of supplies and equipment will be purchased outside of the City of Morro Bay, limited local sales tax will be generated by the project. According to applicant estimates, about $10 million worth of material and equipment would be purchased locally, including concrete, steel, and miscellaneous equipment. Construction payroll is estimated to be about $67 million (AFC, page 6.10-55). On-going local expenditures for maintenance and materials are projected at $260,000 annually, a continuation of existing expenditures. On-going operational payroll is projected at approximately $8.6 million.(Response to data request # 230, April 6, 2001). Thus, the project will result in both one-time and ongoing economic benefits to local businesses.

The existing MBPP generated approximately $131,000 in annual property tax to the City of Morro Bay and a total of $1.1 million to all agencies in 1999, based on an assessed value of $110 million. The net increase in assessed value of the Morro Bay Power Plant is estimated to be $409 million (AFC, page 6-10-43), the total value minus the value of Units 1 through 4 that will be removed. Based on the expectation that approximately

$519 million of improvements will represent assessable value, the City of Morro Bay will receive $626,700 in additional property tax revenue, the County General Fund $1.019 million, and the School District will receive $1.662 million in additional annual revenues. (**SOCIOECONOMICS TABLE 5**).

SOCIOECONOMICS TABLE 5.
Estimated Incremental Property Tax for Morro Bay Power Plant Project

Taxing Jurisdictions	Approximate Share of Tax Increment	Approximate Incremental Revenue
City of Morro Bay	11.94%	$526,700
San Luis Obispo County General Fund	23.10%	$1,019,000
Air Pollution Control District	.064%	$2,800
City/County Library	1.73%	$76,400
San Luis Flood Control District	.245%	$10,800
Nacimiento Water Service	.266%	$11,700
Cayucos-Morro Bay Cemetery	.918%	$40,500
San Luis Coastal Unified School District	37.69%	$1,662,400
San Luis Obispo Community College	6.71%	$295,700
County School Service	3.97%	$175,200
ERAF (schools)	13.36%	$589,100
	100.00%	$4,388,400
Total to County	.40%	$17,600
State Water Debt		
TOTALS	**100.40%**	**$4,428,500**

Source: Estimates based on applicants projections of property value and San Luis County Auditor-Controller allocation factors.

Franchise fees to Morro Bay for natural gas are projected at $850,000 annually. Duke Energy has agreed to support a minimum annual funding to the City of Morro Bay of $2 million from property taxes, franchise fees, and other city fees. The company will provide the City with additional funding to guarantee the $2 million annual fee should the combined totals not reach this level (AFC, page 6.10-46).

ENVIRONMENTAL JUSTICE SCREENING ANALYSIS

The purpose of the screening analysis is to determine whether there exists a low-income and/or minority population, which may be exposed to disproportionately high and adverse human health or environmental effects as a result of the proposed project. For all siting cases, Energy Commission staff conducts the screening analysis in accordance with the "Final Guidance for Incorporating Environmental Justice Concerns in EPA's NEPA Compliance Analysis" dated April 1998. The analysis assesses:

- Whether the potentially affected community has a population that is more than 50 percent minority and/or low-income; and
- Whether the environmental impacts are likely to fall disproportionately on the minority and/or low-income population.

- If the analysis indicates the presence of a substantial minority or low-income population, staff contacts local community groups to provide the Commission with a fuller understanding of the community and the potential environmental justice issues. In addition, community groups are asked to help identify potential mitigation measures.
- Minority Populations
- Minority populations, as defined by EPA's guidance document, are identified where either:
- The minority population of the affected area is greater than fifty percent of the affected area's general population; or
- The minority population percentage of the area is meaningfully greater than the minority population percentage in the general population or other appropriate unit of geographic analysis.

The Guidance does not define the term "affected area", however it states that the analyst should interpret the term "as that area which the proposed project will or may have an effect on." Typically, Energy Commission staff has defined the affected area as the area potentially impacted by the proposed project in the areas of air quality, public health, noise, water, traffic, and visual resources. This area has been determined by Energy Commission staff as that area within a six-mile radius of the proposed site. **SOCIOECONOMICS TABLES 6** and **7** contain 1990 census data and 2000 population estimates for minority populations within a 6-mile radius of the project, the City of Morro Bay, and for the State of California, respectively. **SOCIOECONOMICS FIGURES 1** and **2** illustrate the 1990 and 2000 demographics of the six-mile study area, respectively. Based on the screening process for environmental justice, the data in **SOCIOECONOMICS TABLES 6** and **7** show the minority population for the six-mile radius to be between 7.4 percent and 17.1percent. The minority population within the City of Morro Bay (which is included in the six-mile radius) is between 11.5 percent and 16.6 percent. Based on the screening analysis, a minority population greater than 50 percent is not present.

The guidelines also state that a minority population may be identified when the minority population percentage of the area is meaningfully greater than the minority population percentage in the general population or other appropriate unit of geographic analysis. Therefore, a demographic comparison to the next larger geographic area or political jurisdiction should also be presented when determining whether impacts fall disproportionately on minority and low income populations. For this comparison, staff used the City of Morro Bay as the appropriate unit of geographic analysis because it is the political jurisdiction where the project would be constructed. Comparing the six-mile radius (2000 data) which has a total minority population of 17.1 percent to the City of Morro Bay which has a total minority population of 16.6 percent indicates that the minority population in the affected area is not meaningfully greater than the minority population percentage in the larger geographic area or political jurisdiction. Therefore, based on the 50 percent threshold and the meaningfully greater analysis, the project will

not disproportionately affect the minority population within the affected area of the six-mile radius.

SOCIOECONOMICS TABLE 6: Minority Populations 1990

	Total Population[1]	Minority Population[2]	Percent Minority
Six-mile radius	33,748	2,494	7.4%
City of Morro Bay	9,802	1,133	11.5%
State of California	29,760,021	12,730,895	42.8%
Source:1990 US Census data. 2. Minority includes non-white and white-Hispanic populations.			

SOCIOECONOMICS TABLE 7: Minority Populations 2000

	Total Population[1]	Minority Population[2]	Percent Minority
Six-mile radius	36,336	6,230	17.1%
City of Morro Bay	10,350	1,716	16.6%
State of California	33,560,448	17,100,904	51%
Dept. of Finance Demographic Research Unit Minority includes non-white and white-Hispanic populations.			

LOW-INCOME POPULATIONS

SOCIOECONOMICS TABLE 8 contains 1990 census data for low-income populations within a 6-mile radius of the project, and the City of Morro Bay. The poverty threshold for a family of four persons was $12,674 per year (1990 US Census Data). To determine the number of persons below the poverty level, Energy Commission staff reviewed data from the 1990 US Census: Poverty Status By Age; Universe: Persons for whom poverty status is determined. Because the guidelines do not give a threshold to determine the existence of a low-income population, Energy Commission staff uses the fifty-percent threshold used for minority populations. The data in **SOCIOECONOMICS TABLE 8** indicates that there is not a 50 percent or greater population of low-income people within the project area.

SOCIOECONOMICS TABLE 8: Low-Income Populations

	Population Below Poverty Level[1]	Percent Below Poverty Level
6 Mile Radius	2,959	8.8%
City of Morro Bay	976	11.4%
Source: 1990 US Census.		

STAFF FINDINGS

According to the EPA Guidelines, a minority or low-income population exists if the population of the affected area is greater than fifty percent of the affected area's general population or the minority population percentage of the area is meaningfully greater than the minority population percentage in the general population or other appropriate unit of geographic analysis. Based on the results of the screening analysis, no such populations were found. Therefore, staff finds that the project will not adversely or disproportionately impact any individuals in the affected area, including any member of any minority or low-income population.

PROPERTY VALUES

Neighbors of projects similar to the proposed project have expressed property value concerns. To address such concerns on previous projects, staff has assessed the potential property value impacts associated with natural gas-fired power plants. In general, staff has determined that there is no information or study that demonstrates an adverse or negative impact on surrounding property values directly attributable to a natural gas-fired power plant per se. Negative impacts, however, can be generated if there are significant adverse impacts such as visual, noise, traffic, or air quality. Based upon this finding and the fact that the proposed project is a replacement of an existing power plant and not a change in land use, staff has concluded that the proposed project is unlikely to adversely impact property values in the vicinity. There may be a small negative impact during the construction of the new plant, as the existing large plant will still be in operation while construction cranes and other equipment are utilized in constructing the adjacent replacement plant. Homes in the neighborhood that look down at the plant will temporarily have a "more industrial" view, but upon completion this will improve and the view will be enhanced compared to the present.

CUMULATIVE IMPACTS

San Luis Obispo County is an area that has a relatively constant level of development of public and private projects, including highway projects, new commercial development, and new residential development. There are on-going projects in San Luis Obispo County that would occur concurrently with the Morro Bay Power Plant Project should it be approved. The only potential impact from a cumulative socioeconomic point of view would be a possible shortage of workers in some trades, and the influx of a new population which may have an impact on housing and schools.

Table 6.1-1 in the AFC lists the known offsite development projects in the project area. Of these projects, expansion of the San Luis Obispo Airport will be completed in 2001. Cleanup of Avila Beach and completion of the Cuesta Grade Highway 101 project may overlap with the MBPP in some construction trades, such as equipment operators and laborers, but there is no labor force shortage in these skills. Most of the projects listed in Table 6.1-1 are residential and commercial development projects which would not require the same construction trades as those needed for power plant construction.

Thus, there are no industrial projects in the area that would draw upon trades that might be in short supply. Given the size of the labor force in the county and adjacent counties, staff believes that there are an adequate number of workers in the area.

Socioeconomics Figure 1

Socioeconomics Figure 2

FACILITY CLOSURE

UNEXPECTED PERMANENT CLOSURE

Should the plant be permanently closed, the beneficial socioeconomic impacts such as worker payroll, project expenditures, local economic stimulus, and property tax revenues would no longer occur. The planned lifetime of the proposed power plant is 25 to 40 years; however, given unforeseen circumstances the plant may be retired prematurely for a variety of reasons.

UNEXPECTED TEMPORARY CLOSURE

Should the plant be temporarily shutdown or closed, there would not be any significant socioeconomic impacts. The applicant would conduct a review to determine if there had been any environmental damage or release of hazardous materials. If not, the plant could be mothballed. Before the plant begins commercial operation, the applicant will develop a contingency plan to deal with premature or unexpected closures. This would include communication with the Energy Commission, the City of Morro Bay, and local agencies regarding schedule of facility closure and compliance with LORS.

PLANNED CLOSURE

In the event that the decision is made to permanently close the facility, the applicant will develop a plan for decommissioning that will be submitted to the Energy Commission and other appropriate agencies. The plan will include compliance with all applicable LORS. Should the plant be permanently closed, the beneficial socioeconomic impacts such as worker payroll, project expenditures, and property and other tax revenues would no longer occur. This would have a significant adverse impact on the tax revenues of the City of Morro Bay.

CONCLUSIONS AND RECOMMENDATIONS

CONCLUSIONS

Staff believes that the Morro Bay Power Plant Project would not cause a significant adverse direct or cumulative impact on housing, employment, schools, public services or utilities. The Project would have a temporary benefit to the City of Morro Bay and adjacent areas in terms of an increase in local jobs and commercial activity during the construction of the facility. The construction payroll and project expenditures would also have a positive effect on the local and county economy. The estimated benefits from the project include increases in the affected area's property and sales taxes, employment, and sales of services, manufactured goods, and equipment. The estimated annual operating budget of the plant will be $2 to $4 million, some of which will be spent locally. Overall, staff believes that the project will have a positive socioeconomic impact on the Morro Bay area.

The project, as proposed, would be consistent with all applicable Federal and State LORS. The proposed conditions of certification ensure the compliance with LORS, and that anticipated local benefits occur to the extent feasible.

RECOMMENDATIONS

If the Energy Commission certifies the proposed project, staff recommends that it adopt the following conditions of certification.

PROPOSED CONDITIONS OF CERTIFICATION

SOCIO-1 The project owner and its contractors and subcontractors shall recruit employees and procure materials and supplies within the Central California area (San Luis Obispo, Kern, and Santa Barbara Counties) first unless:

- to do so will violate federal and/or state statutes;
- the materials and/or supplies are not available; or
- qualified employees for specific jobs or positions are not available; or
- there is a reasonable basis to hire someone for a specific position for outside the local area.

Verification At least thirty (30) days prior to the start of construction activities, the project owner shall submit to the Energy Commission Compliance Project Manager (CPM) copies of contractor, subcontractor, and vendor solicitations and guidelines stating hiring and procurement requirements and procedures. In addition, the project owner shall notify the CPM in each Monthly Compliance Report of the reasons for any planned procurement of materials or hiring outside the local regional area that will occur during the next two months.

SOCIO-2. The project developer shall contribute $3,028,676 to the City of Morro Bay to mitigate demands on the Morro Bay Police and Fire Departments that will occur during the construction and demolition of the new and existing Morro Bay Power Plant.

Verification: In each Annual Compliance Report, the project owner shall submit to the Energy Commission Compliance Project Manager (CPM) verification of payment to the City of Morro Bay per the agreement detailed in Appendix 6.10-5 of the AFC.

REFERENCES

Claritas-Connect 2000. Claritas, Inc. Arlington, Virginia. Connect Study Reports of Race and Hispanic Individuals Within Six Miles, January 2001.

City of Morro Bay, Finance Department. 2000. Fiscal Year 2000-2001 Budget: History of Revenues for General Fund.

City of Morro Bay. General Plan. 1988.

City of Morro Bay and Duke Energy Morro Bay LLC. 2000. Memorandum of Understanding Between The City of Morro Bay and Duke Energy Morro Bay LLC. 2000

Duke Energy Morro Bay LLC. 2000. Application for Certification Morro Bay Power Plant. October 2000.

Department of Finance, Demographic Research Unit, State of California. 2001. Internet website www.dof.ca.gov/html/demograp/

Employment Development Department. State of California 2001. Internet website www.lmi4ed.ca.gov/reports and www.calmis.ca.gov

Jones, Jeff. 2001. Fire Chief, City of Morro Bay. Personal communication with Michael Fajans, GRI, March 27, 2001.

Livingston, Roy. 2001. Business Office, San Luis Obispo Coastal Unified School District. Personal communication with Michael Fajans, GRI, April 9, 2001.

McMasters, Steve. 2001. Planner, San Luis Obispo County Planning Department. Personal communication with Michael Fajans, GRI, March 21, 2001.

U.S. Census Bureau 2000. Internet website www.census.gov.

TRAFFIC AND TRANSPORTATION

Steven J. Brown, P.E.

INTRODUCTION

The Traffic and Transportation section of the Preliminary Staff Assessment (PSA) addresses the extent to which the project may impact the transportation system within the vicinity of its proposed location. This section analyzes the potential traffic and transportation impacts associated with decommissioning and removal of onsite fuel oil tank and existing power generating equipment, construction of new combined cycle generating units, and operation of the Morro Bay Power Plant.

This analysis includes an evaluation of the influx of large numbers of construction workers, and how, over the course of the construction phase, they can increase roadway congestion and impact traffic flow. The review also considered the transportation of large pieces of equipment and how this transport can increase roadway congestion and increase traffic hazards. On-going (post construction) operations and maintenance traffic, including deliveries of hazardous materials will represent a negligible increase over current conditions. In all cases, the transportation of hazardous materials will need to comply with federal and state laws.

Staff has analyzed the information provided in the AFC and from other sources to determine the potential for the Morro Bay Power Plant Project to have significant traffic and transportation impacts, and has assessed the availability of mitigation measures that could reduce or eliminate the significance of those impacts. Conditions of certification are included to implement the appropriate mitigation measures and to ensure that the project complies with the applicable Laws, Ordinances, Regulations, and Standards (LORS).

LAWS, ORDINANCES, REGULATIONS AND STANDARDS

FEDERAL

Title 49, Code of Federal Regulations, Sections 171-177, governs the transportation of hazardous materials, the types of materials defined as hazardous, and the marking of the transportation vehicles.

Title 49, Code of Federal Regulations, Sections 350-399, and Appendices A-G, Federal Motor Carrier Safety Regulations, addresses safety considerations for the transport of goods, materials, and substances over public highways.

STATE

The California Vehicle Code and the Streets and Highways Code contain requirements applicable to the licensing of drivers and vehicles, the transportation of hazardous materials and rights-of-way. In addition, the California Health and Safety Code addresses the transportation of hazardous materials.

Provisions within the California Vehicle Code are:

- Section 353 defines hazardous materials. Sections 31303-31309 regulate the highway transportation of hazardous materials, the routes used, and restrictions thereon.
- Sections 31600-31620 regulate the transportation of explosive materials.
- Sections 32000-32053 regulate the licensing of carriers of hazardous materials and include noticing requirements.
- Sections 32100-32109 establish special requirements for the transportation of inhalation hazards and poisonous gases.
- Sections 34000-34121 establish special requirements for the transportation of flammable and combustible liquids over public roads and highways.
- Sections 34500, 34501, 34501.2, 34501.3, 34501.4, 34501.10, 34505.5-7, 34506, 34507.5 and 34510-11 regulate the safe operation of vehicles, including those which are used for the transportation of hazardous materials.
- Sections 25160 et seq. address the safe transport of hazardous materials.
- Sections 2500-2505 authorize the issuance of licenses by the Commissioner of the California Highway Patrol for the transportation of hazardous materials including explosives.
- Sections 13369, 15275, and 15278 address the licensing of drivers and the classifications of licenses required for the operation of particular types of vehicles. In addition, the possession of certificates permitting the operation of vehicles transporting hazardous materials are required.

California Streets and Highways Code, Sections 117 and 660-72, and California Vehicle Code, Sections 35780 et seq., require permits for the transportation of oversized loads on county roads.

California Street and Highways Code, Sections 660, 670, 1450, 1460 et seq., 1470, and 1480, regulate right-of-way encroachment and the granting of permits for encroachments on state and county roads.

All construction within the public right-of-way will need to comply with the ""Manual of Traffic Controls for Construction and Maintenance of Work Zones"" (Caltrans, 1996).

LOCAL

The Morro Bay Power Plant Project is located in Morro Bay, California. The City of Morro Bay has guidelines and policies pertinent to development within the City set forth in the Morro Bay General Plan Circulation Element and the City of Morro Bay Coastal Land Use Plan, included as part of the California Coastal Act of 1976. The City of Morro Bay General Plan Circulation Element and Coastal Land Use Plan contain the guiding policies used in the transportation analysis for this project.

The City of Morro Bay has local ordinances regarding vehicle weight and size limits in the City of Morro Bay Municipal Code. The ordinances do not directly apply to the MBPP project because the project is not expected to use the roadway segments identified in the ordinances. However, the ordinances are included below.

- 10.28.230 Vehicle Weight Limit - No person shall operate or drive a motor vehicle with a gross vehicle weight in excess of five tons on any portion of Ironwood Avenue between Cal. State Highway No. 41 and Avalon Street. Vehicles with bona fide points of destination on this street segment and vehicles subject to Sections 1031 and 1036, inclusive, of the Public Utilities Code are exempt from compliance with this section. (Ord. 345, 1989)
- 10.28.130 Certain vehicles prohibited in central traffic district -

  A. No person shall operate any of the following vehicles in the central traffic district between the hours of seven a.m. and six p.m. of any day:

     1. Any freight vehicle more than eight and one-half feet in width, with load, or any freight vehicle so loaded that any part of its load extends more than twenty feet to the front or rear of said vehicle;

     2. Any vehicle carrying building material that has not been loaded, or is not to be unloaded, for some point within the central traffic district;

  B. Provided that the city engineer may by written permit charged in the Master Fee Schedule authorize the operation of any such vehicle for the purpose of making necessary emergency deliveries to or from points within the central traffic district. (Ord. 225 § 43,1982; Ord 9 § 1 (part), 1964: prior code § 8512)

- 10.04.030 Central traffic district - ""Central traffic district"" includes all streets or portions of streets within the area bounded by the following streets: Bounded on the south by Pacific Street, on the north by Beach Street, Main Street and Quintana Road, on the west by the Embarcadero and Front Street and on the east by Kern Avenue, Morro Bay Boulevard and Quintana Road. ""Central traffic district"" means ""business district"" as defined in the Vehicle Code of the state. (Ord. 447 § 2A, 1995: amended during 3/88 supplement; Ord. 9 § 1 (part), 1964: prior code § 8102)

SETTING

REGIONAL DESCRIPTION

The Morro Bay Power Plant (MBPP) Project is located in the City of Morro Bay in San Luis Obispo County, California. The project site is located between State Route 1 and the Pacific Ocean on the north end of the Embarcadero commercial district. The proposed project is located within the existing Morro Bay Power Plant site. Access to the site is proposed from Embarcadero Drive via a new roadway extension north to Atascadero Road. A secondary project access is proposed at the existing rear gate entrance on Main Street. **Traffic and Transportation Figure 1** shows the major roads, potential access roads, and highways in the project area.

Figure 1: Regional Transportation Setting

AREA ROADWAYS

The major roadways in the vicinity of the project site are State Route 1, State Route 101, State Route 41 (Atascadero Road), Main Street, and Embarcadero Road. These roadways are described below.

State Route 1 passes through the City of Morro Bay and is the key north/south route serving the coastal area. State Route 1 is a scenic route through central California with a portion of State Route 1 north of the project site extending up through the Cayucos area recently designated by the State of California as a key scenic route.

State Route 101, which is located about 15 miles east of Morro Bay, offers an alternative north/south route through the County and is a more direct north/south regional passageway, linking the San Francisco Bay Area to the north with the cities of San Luis Obispo, Santa Barbara, and Los Angeles to the south. State Route 1 and State Route 101 join together as a combined route in the Santa Barbara area and the San Luis Obispo area.

State Route 41, also known as Atascadero Road within the Morro Bay city limits, extends east from State Route 1 at the Cuesta Hillside residences to State Route 101 in the City of Atascadero. Atascadero Road extends west of State Route 1 past Morro Bay High School to the beach where it ends.

Main Street is a primary local collector that extends north/south from the northern city limits to Morro Bay State Park. Main Street parallels State Route 1 adjacent to the project site and serves the central business district of Morro Bay.

Embarcadero Road extends from Morro Rock along the waterfront to the boat launch at Tidelands Park. The Embarcadero area serves as a major tourist attractor and commercial district. The existing site access is on Embarcadero Road south of Coleman Park.

RAILWAYS

Freight rail service is not provided to the project area, as rail lines do not exist in the City of Morro Bay. Passenger rail service exists in San Luis Obispo along the Union Pacific/Southern Pacific Coast Line track. Freight rail service is also provided on the same track system.

TRUCK TRAFFIC

The roadways adjacent to the site carry a small percentage of heavy vehicles (approximately 4% according to Appendix 6.11-1, sub appendix G1 of the AFC). The City of Morro Bay has vehicle weight limits for some local roadways. The roadways affected by the project are not included as part of these regulations. Thus, California Vehicle Code limits apply to all study roadways (including state routes). These limits are 20,000 pounds per axle and 10,500 per wheel or wheels on one end of the axle.

INTERSECTION OPERATING CONDITIONS

Intersections are usually the critical elements of the roadway system in assuring adequate travel capacity, minimizing delays, maximizing safety, and minimizing environmental impacts.

The operating conditions of a roadway system, including intersections, are described using the term ""level of service"". Level of service (LOS) is a description of a driver''s experience at an intersection or roadway based on the level of congestion (delay). However, it is not a measure of safety or accident potential. Intersection and roadway LOS can range from ""A"", representing free-flow conditions with little or no delay, to ""F"", representing saturated conditions with substantial delay. There are numerous methodologies used to determine intersection LOS. For the MBPP project, the applicant used methodologies contained in the *Highway Capacity Manual*, Special Report 209, Transportation Research Board, Washington D.C., 1994 except for State Route 1. LOS on State Route 1 was analyzed using methodologies contained in the *Highway Capacity Manual*, Special Report 209, Transportation Research Board, Washington D.C., 1997.

The City of Morro Bay General Plan Circulation Element specifies a minimum standard of LOS C at intersections. Table 6.11-2 of the AFC summarizes intersection LOS at the 15 study intersections. Each study intersection was found to operate at an overall acceptable LOS (LOS C or better) under existing conditions (see **TRAFFIC AND TRANSPORTATION Table 1, Level of Service - Existing Conditions**). The intersection of Main Street at State Route 1, Northbound Ramps has an overall intersection LOS of A. However, vehicles heading westbound under worst movement conditions could experience a LOS of D. The LOS of the impacted intersections reported by the applicant in Table 1 was verified through independent calculations and discussions with the City of Morro Bay Public Works Department.

TRAFFIC AND TRANSPORTATION Table 1
Level of Service - Existing Conditions

North/South Street	East/West Street	Intersection Control	AM Peak Hour on Adjacent Street (7:00-8:00)		PM Peak Hour on Adjacent Street (4:00-5:00)	
			Delay (sec)	LOS	Delay (sec)	LOS
Main St.	Atascadero Rd.	All-Way Stop	13.2	B	13.9	B
Hwy 1 NB Ramps	Atascadero Rd.	Unsignalized	2.7	A	1.4	A
Hwy 1 SB Ramps	Atascadero Rd.	Unsignalized	1.4	A	2.8	A
MBHS East	Atascadero Rd.	Unsignalized	0.9	A	1.3	A
MBHS West	Atascadero Rd.	Unsignalized	1.5	A	1.1	A
Main St.	Hwy 1 NB Ramps	Unsignalized	0.7	A	1.6	A
Main St.	Hwy 1 SB Ramps	Unsignalized	1.6	A	1.5	A
Main St.	Quintana Rd.	Signalized	7.6	A	8.5	B
Main St.	Beach St.	All-Way Stop	9.3	A	6.0	A
Main St.	Harbor St.	All-Way Stop	9.2	A	3.5	A
Main St.	Pacific St.	Unsignalized	1.1	A	2.3	A
Embarcadero Rd.	Beach St.	All-Way Stop	7.9	A	2.2	A
Embarcadero Rd.	Harbor St.	Unsignalized	0.8	A	1.0	A
Embarcadero Rd.	Pacific St.	Unsignalized	1.3	A	1.8	A
Embarcadero Rd.	Main Duke Entr.	Unsignalized	0.2	A	0.8	A

Source: DUKE 2000a. Volume 1-B. Table 6.11-2 pages 6.11-20 through 6.11-22

IMPACTS

PROJECT SPECIFIC IMPACTS

CONSTRUCTION PHASE

Construction activity at the Morro Bay Power Plant will be carried out in three Stages and will take approximately six years, see **TRAFFIC AND TRANSPORTATIOIN Table 2 Stages For Project Construction**. Stage I will be the decommissioning and removal of existing on site fuel oil tanks. This stage will last approximately three months. The work associated with this decommissioning phase will require less that 40 worker and average 10 t0 15 trucks trips per day at the site. Stage II will be for the construction of two 600 MW combined cycle generating units. Stage II construction will take approximately 21 months with an expected maximum of workforce of 950 (700 on the day shift and 250 on the night shift). During Stage II truck deliveries are expected to peak at 50 per day. Stage III of the project will be for the decommissioning and removal of the exiting power generating equipment from the site. This stage is estimated to take approximately 47 months with a peak workforce of 100 and 30 truck trips per day.

TRAFFIC AND TRANSPORTATION Table 2
Stages For Project Construction

Duration	**STAGE I 3 Months**	**Stage II 21 Months**	**Stage III 47 Months**
Workforce			
Peak	35	700 Day Shift/250 Night Shift	100
Average	35	300 Day Shift/100 Night Shift	40
Truck Trips			
Peak	10 to 15/Day	50/Day	30/Day
Average	10 to 15/Day	6/Day	10 to 15/Day

Source: Duke 2000a. Volume 1-B Table 6.11-1. page 6.11-1.

In analyzing the potential effects of the Morro Bay Power Plant Project, it was found that the primary impact of the project would occur during Stage II. After construction, the ongoing operation of a facility will be similar to current operating conditions and will not create a significant increase in traffic. During construction, the number of trips generated by the site will be significantly higher due to construction workers and construction-related deliveries. The construction phases, in particular Construction Phase II would require the largest amount of construction employees. This phase was analyzed to represent the highest amount of trip generation (i.e., worst-case conditions).

To provide a worst-case estimate of the impacts of the site during construction, impacts on the LOS for local intersections were analyzed using the current traffic counts along with estimated traffic generated by the project during the peak month of Phase II construction.

COMMUTE TRAFFIC

During the peak construction phase (Phase II), a maximum of 950 workers are expected to access the site daily. Of the 950 employees, 700 employees are expected during the day shift (i.e., beginning no later than 7:00 a.m. and ending before 4:00 p.m. or after 5:00 p.m.) and 250 employees are expected during the night shift (i.e., beginning no earlier than 7:00 p.m. and ending no later than 6:00 a.m.). This shift scheduling will result in the construction workforce traffic being off of the area roadways during peak traffic hours. According to the AFC, the project is expected to generate a total 462 trips between 6:00 a.m. and 7:00 a.m. and 462 trips between 5:00 p.m. and 6:00 p.m. (see **TRAFFIC AND TRANSPORTATION Table 3 Project Trip Generation Assumptions**). The measured a.m. peak hour of traffic within the study area is between 7:00 a.m. and 8:00 a.m. and p.m. peak hour is between 4:00 p.m. and 5:00 p.m. Based on similar plant construction activities, this analysis assumed a daily trip generation rate of 2.20 trips per employee. Other assumptions include 25% of construction workers would carpool based on observations from the applicant for the construction of their Moss Landing Power Plant, only 80 percent of the daily one-way trips would arrive or leave during the project peak hours, 10% of the on-site workers would travel off-site during the day for personal business, and 5% of day shift construction levels would equal non-construction generated trips. These assumptions are included in traffic analysis to reflect a worst-case analysis of impacts. A detailed summary of trip generation assumptions is included in **Table 3**.

TRAFFIC AND TRANSPORTATION Table 3
Project Trip Generation Assumptions

Number of Employees	Daily Trip Generation Rate[1]	Total of Expected Commute Trips[2]	Carpool Reduction[3]	Projected Daily Trip Generation	AM Project Peak Hour (6:00-7:00 a.m.)			PM Project Peak Hour (5:00-6:00 p.m.)		
					Total[4]	In[5]	Out[5]	Total	In	Out
700	2.2	1,540	-385	1,155	462	420	42	462	42	420

Notes:
[1] – Daily trip generation rates based on similar power plant construction activities.
[2] – Expected daily commute trips = number of employees (700) X daily trip generation rate (2.2 trips/employee).
[3] – Carpool reduction = 25% (based on similar power plant construction activities).
[4] – Total Project Peak Hour Trips (AM and PM) based on assumption that 80% of daily total one-way employee trips occur during the project peak hour (assumes 10% of daily trips will arrive before or after the peak hour and 10% of daily trips will include personal trips made by employees outside of peak hours: based on similar power plant construction activities).
[5] – Peak hour total trips split .91/.09 favoring the heavy movement (i.e., inbound trips in the AM peak hour and outbound trips in the PM peak hour: based on similar power plant construction activities).

The applicant has proposed that employees traveling to and from the project site will use specific routes and times to avoid peak traffic levels on existing peak volume roadways. Construction workers will enter the plant site through what is call the back gate. To get to the back gate from Highway 1 the workers will take the Main Street exit turning right off of Main Street onto the road along the back of the MBPP and entering the site through the back gate by the PG&E Morro Bay Switchyard.

This will minimize the impact of morning construction traffic at the Morro Bay High School located off of Atascardo Road. Traffic counts collected on June 8th and 9th, 1999 indicated that the High School experienced morning hour peak traffic between 7:15 to 8:15 a.m., and an afternoon hour peak from 2:00 to 3:00 p.m.

The construction workers will leave the site through an exit to be located on the southwest corner of the plant site turning left on Embarcadero. Traffic will then proceed across the new bridge that the MBPP has proposed to build across Morro Creek. Traffic would follow this road to the right on to Atascadero Road. Once on Atascadero Road the traffic can continue on Atascadero Road to the east where it becomes Highway 41. From Atascadero Road the traffic can also take Highway 1 to the north or south or turn onto Morro Bay''s Main Street. The end of the day time construction shift would be scheduled such that the traffic did not impact the Atascadero Road, Highway 1 and Main Street intersection during the peak afternoon hour for the High School and between 4:00 p.m. and 5:00 p.m. peak hour for the community.

The roadways around the MBPP do not have sufficient parking spaces available for the construction workforce, local community residents and tourist. Therefore the applicant will need to have off street parking for the project. The applicant has stated in Data Response 120 that all construction related parking would occur in off street designated areas. These parking areas will be either on-site or at off-site construction support area. The construction support areas will primarily be used as construction lay-down areas and will enable construction managers'' control of delivery scheduling to avoid peak periods of traffic on the local street system.

TRUCK TRAFFIC

During Phase II construction approximately 3,500 truck transports are expected over the 21-month period. According to Table 6.11-4 of the AFC, the estimated average number of truck trips during the first 6 to 8 months of Phase II is 25 trips per day. During the last 13 months of Phase II 12 daily truck trips are expected. These trips are assumed to occur during off-peak hours, which will minimize impacts related to congestion and LOS. There may be impacts associated with the transport of oversized loads and hazardous materials unless mitigation is adopted.

The transportation and handling of hazardous substances associated with the Morro Bay Power Plant Project can increase roadway hazard potential. The handling and disposal of hazardous substances are addressed in the **WASTE MANAGEMENT** and the **HAZARDOUS MATERIALS MANAGEMENT** sections of the AFC. Potential impacts of the transportation of hazardous substances can be mitigated to insignificance by compliance with federal and state standards established to regulate the transportation of hazardous substances. Conditions of certification that ensure this compliance are discussed later in this analysis.

The State Department of Motor Vehicles specifically licenses all drivers who carry hazardous materials. Drivers are required to carry a manifest available for inspection by the California Highway Patrol at inspection stations along major highways and interstates, and to check for weight limits and conduct periodic brake

inspections. Commercial truck operators handling hazardous materials are also required to take instruction in first aid and procedures on handling hazardous waste spills.

The California Vehicle Code and the Streets and Highways Code (Sections 31600 through 34510) are equally important in insuring that the transportation and handling of hazardous materials are done in a manner that protects public safety. Enforcement of these statutes is under the jurisdiction of the California Highway Patrol. For an in-depth description of the amount and type of hazardous materials that will be used during the construction of the facility, see the **WASTE MANAGEMENT** and **HAZARDOUS MATERIALS MANAGEMENT** sections of the PSA.

Transportation of equipment exceeding the load size and weight limits of any roadways will require special permits. The procedures and processes for obtaining such permits are fairly straightforward. Mitigation measures and conditions of certification that ensure this compliance are discussed later in this section.

TOTAL PROJECT CONSTRUCTION TRAFFIC

The combination of employee, delivery, and non-construction trips will total 1,251 trips per day. As mentioned above, MBPP plan to schedule these project-related trips such that the trips do not occur during the peak traffic periods (i.e., a.m. peak hour and p.m. peak hour). To evaluate the maximum impact the MBPP traffic could have on the community, the workforce trips outlined in Table 3 were assumed to occur during Morro Bay peak traffic hours. The addition of these trips to the existing traffic volumes was analyzed to determine project-related LOS. The cumulative impacts of traffic volume on the LOS associated with this project and other identified construction projects that may occur while this project is under construction are shown in the Cumulative Impacts Section **TRAFFIC AND TRANSPORTATION Table 4 Level of Service Summary for Cumulative Conditions**.

Construction activity (i.e., additional traffic, heavy vehicles, and construction equipment) may deteriorate roadway pavement sections on roadways serving the project (i.e., Embarcadero Road adjacent to the project, Main Street between the southbound SR 1 ramps and Atascadero Road, and Atascadero Road between Embarcadero Road and Main Street). Mitigation measures and conditions of certification are presented later in this analysis to ensure the mitigation of any project-related impact on the surrounding transportation system.

INTERSECTION OPERATING CONDITIONS

In that construction-related traffic for this project will be traveling primarily during off peak times, the project will not result in the degrading of any of the intersection to a LOS of D or worse. The intersection of Maine Street and Atascadero is presently operating at a LOS of D during the p.m. peak hour. To ensure that the MBPP does not result in further decreasing the LOS of this intersection, mitigation will be required.

LINEAR FACILITIES

No new linear facilities are proposed as part of this project. Therefore, no significant impacts to local transportation facilities are expected.

OPERATIONAL PHASE

COMMUTE AND VISITOR TRAFFIC

The operational phase of the Morro Bay Power Plant will require a workforce similar to the number of existing full-time employees (approximately 77 employees). Therefore, the operational phase would not increase the number of trips generated from the site and would not create a significant impact on the surrounding transportation system.

TRUCK TRAFFIC

The operational phase of the proposed project will not result in increased volumes of truck transport activity for long-term operation of the plant. Therefore, since future operations and maintenance activity levels will be equivalent to current operating conditions, overall impacts for future operations and maintenance are not considered significant.

The California Vehicle Code and the Streets and Highways Code (Sections 31600 through 34510) are equally important to ensure that the transportation and handling of hazardous materials are done in a manner that protects public safety. Enforcement of these statutes is under the jurisdiction of the California Highway Patrol. For an in-depth description of the amount and type of hazardous materials that will be used during the operation of the facility, see the **HAZARDOUS MATERIALS MANAGEMENT** sections of the PSA.

The state highway and local roadway system will not be significantly impacted by any increase in truck traffic associated with the operation of the Morro Bay Power Plant. Potential impacts from the transportation of hazardous substances can be mitigated to insignificance by compliance with Federal and State standards established to regulate the transportation of hazardous substances. Mitigation measures and conditions of certification that ensure this compliance are discussed later in this analysis.

LINEAR FACILITIES

The operation of both the electric and gas transmission lines will not have an impact on area roadways except for short-term maintenance or unplanned difficulties. In either case, these potential impacts create traffic flow difficulties that are typically limited in duration and are not expected to cause any significant traffic impacts.

CUMULATIVE IMPACTS

Section 6.11.2.3 of the AFC identifies local projects that could potentially create a cumulative impact on the area if combined with project traffic. The schedule for buildout of these projects has not been determined; however, to represent a worst-

case scenario, these projects were assumed to be developed concurrently with the MBPP project. The traffic volume from all cumulative projects, plus the power plant project, will not deteriorate the service levels to below acceptable levels, with the exception of the intersection of Main Street at Atascadero Road. Under cumulative conditions this intersection will continue to operate at LOS D in the p.m. peak hour. This is considered a significant impact. Mitigation measures and conditions of certification are discussed later in the Mitigation section that would allow the intersection to operate at an acceptable LOS of C. **Table 4** includes a summary of study intersection operating conditions under cumulative conditions.

TRAFFIC AND TRANSPORTATION Table 4
Level of Service Summary for Cumulative Conditions

			Project Construction Plus Cumulative Conditions					
			AM Peak Hour on Adjacent Street (7:00-8:00)		PM Peak Hour on Adjacent Street (4:00-5:00)		PM Peak Hour of Project (5:00-6:00)	
North/South Street	East/West Street	Intersection Control	Delay (sec)	LOS	Delay (sec)	LOS	Delay (sec)	LOS
Main St.	Atascadero Rd.	All-Way Stop	15.4	C	15.6	C	25.6	D
Hwy 1 NB Ramps	Atascadero Rd.	Unsignalized	3.0	A	1.7	A	2.2	A
Hwy 1 SB Ramps	Atascadero Rd.	Unsignalized	1.8	A	3.1	A	3.6	A
MBHS East	Atascadero Rd.	Unsignalized	1.0	A	1.2	A	0.6	A
MBHS West	Atascadero Rd.	Unsignalized	1.4	A	0.9	A	0.3	A
Main St.	Hwy 1 NB Ramps	Unsignalized	1.2	A	1.8	A	1.9	A
Main St.	Hwy 1 SB Ramps	Unsignalized	1.9	A	1.7	A	1.5	A
Main St.	Quintana Rd.	Signalized	8.0	A	9.0	B	13.2	B
Main St.	Beach St.	All-Way Stop	9.8	A	6.9	A	12.6	B
Main St.	Harbor St.	All-Way Stop	9.6	A	3.9	A	10.3	B
Main St.	Pacific St.	Unsignalized	1.3	A	2.6	A	2.1	A
Embarcadero Rd.	Beach St.	All-Way Stop	7.9	A	2.3	A	8.9	A
Embarcadero Rd.	Harbor St.	Unsignalized	0.9	A	1.1	A	1.4	A
Embarcadero Rd.	Pacific St.	Unsignalized	1.2	A	1.9	A	2.1	A
Embarcadero Rd.	Main Duke Entr.	Unsignalized	0.2	A	0.8	A	0.8	A

FACILITY CLOSURE

The minimum design life of the power plant is expected to be 30 years. To ensure that the planned closure will be completed in a manner that complies will all LORS at least twelve months prior to the proposed decommissioning, the applicant shall prepare a Decommissioning Plan for submission to the Energy Commission for review and approval. At the time of closure all then-applicable LORS will be identified and the closure plan will address compliance with these LORS. The effects of Morro Bay Power Plant closure on traffic and transportation will be similar to those discussed for the construction of the project. Closure will create traffic levels that are similar in intensity and duration to those expected during facility construction. The removal of waste and other materials will produce impacts from truck traffic. At this time, no specific conclusions can be drawn about the effects of project closure on traffic and transportation.

MITIGATION

Applicants for the Morro Bay Power Plant project have indicated their intention to comply with all LORS related to the transport of oversize loads and hazardous materials. The applicant should also implement the following traffic and transportation mitigation measures:

- The applicant should enforce a policy that all project-related parking occurs in designated parking areas;
- The applicant should repair any damages to roadways adjacent to the site incurred during Morro Bay project construction to their pre-project construction condition;
- The applicant should prepare a construction Transportation Management Plan that limits construction traffic to off-peak periods, to the satisfaction of Caltrans and the City of Morro Bay. These plans and programs should establish schedules for major shifts outside of the ambient street traffic peak periods and timing of heavy vehicle equipment and building materials deliveries.
- The applicant should mitigate (with approval from the City of Morro Bay) the cumulative impact at the intersection of Main Street at Atascadero Road by reconfiguring the eastbound approach (Atascadero Road) to include a left turn lane and a shared through-right turn lane. The result of this improvement would be LOS C operating conditions. Funds for this improvement have been included in a public safety mitigation agreement that the applicant has reached with the City, which is implemented in CONDITION SOCIO-2.

COMPLIANCE WITH LORS

Applicants for the Morro Bay Power Plant Project have stated their intention to comply with all federal, state, and local LORS. A condition to ensure compliance is proposed below. Therefore, the project is considered consistent with identified federal and state LORS.

CONCLUSIONS AND RECOMMENDATIONS

The intersections and roadways that could be impacted by the construction of the MBPP are operating at acceptable LOS (LOS of C or better). The primary impact of the MBPP on the area roadways and intersections occurs during construction. The impact of the construction traffic did not result in the LOS decreasing to an unacceptable level except for the all-way stop located at the intersection of Main Street and Atascadero Road. The LOS of this intersection declines to a LOS of D when MBPP construction traffic is included during the p. m. peak hour (5:00 p.m. – 6:00 p.m.). This unacceptable LOS can be mitigated such that the intersection operates at a LOS of C during the p. m. peak hour if the mitigation and conditions of certification are followed.

During the operational phase, increased vehicle trips resulting from the daily movement of workers and materials will not have a significant impact on the area roadways and intersection.

All transportation and handling of hazardous substances can be mitigated to insignificance by compliance with federal, state, and local standards and permits established to regulate the transportation of hazardous substances.

To minimize the impact of traffic on the area roadways and intersection it is recommended that:

1. During the construction phase, the workforce shift schedules are to be arranged to avoid increasing travel during peak traffic period, therefore increased vehicle trips resulting from the daily movement of workers and materials will not significantly increase congestion and degrade the level of service at study intersections.
2. Construction activities have the potential to damage local roadways. The applicant should be required to repair damaged roadways to their pre-construction condition.
3. The AFC indicates that parking for the construction workforce will be provided in designated areas either on the project site or at an alternate site with shuttle service. The applicant should enforce a policy that all project-related parking occurs in designated parking areas; therefore, construction-period parking is not considered a significant project impact.

Staff recommends that, if the Energy Commission approves the proposed project, it adopt the following proposed conditions of certification.

PROPOSED CONDITIONS OF CERTIFICATION

TRANS-1 The project shall comply with California Department of Transportation (Caltrans) limitations on vehicle sizes and weights. In addition, the project owner or their contractor shall obtain necessary transportation permits from Caltrans and all relevant jurisdictions for both rail and roadway use.

Verification: In Monthly Compliance Reports, the project owner shall submit copies of any oversize and overweight transportation permits received during that reporting period. In addition, the project owner shall retain copies of these permits and supporting documentation in its compliance file for at least six months.

TRANS-2 The project shall comply with California Department of Transportation (Caltrans) limitations for encroachment into public rights-of-way and shall obtain necessary encroachment permits from Caltrans and all relevant jurisdictions.

Verification: In Monthly Compliance Reports, the project owner shall submit copies of any encroachment permits received during that reporting period. In addition, the project owner shall retain copies of these permits and supporting documentation in its compliance file for at least six months.

TRANS-3 The project shall ensure that all federal and state regulations for the transport of hazardous materials are observed.

Verification: The project owner shall include in its Monthly Compliance Reports copies of all permits and licenses acquired by the project owner and/or subcontractors concerning the transport of hazardous substances.

TRANS-4 Following completion of construction of the power plant and all related facilities, the project owner shall repair Embarcadero Road adjacent to the project, Main Street between the Southbound SR 1 ramps and Atascadero Road, and Atascadero Road between Embarcadero Road and Main Street and routes associated with off site laydown areas to pre-construction conditions, or as near as possible.

Protocol: Prior to start of site preparation or earth moving activities, the project owner shall photograph the roadway segments and intersections described above. The project owner shall provide the CEC Compliance Project Manager (CPM), City of Morro Bay and Caltrans with a copy of these photographs.

Verification: At least 60 days prior to the start of site preparation or earth moving activities, the project owner shall photograph the identified roadway segments and intersections, and provide copies to CPM, City of Morro Bay, and Caltrans. Within 30 days after completion of project construction, the project owner shall meet with the CPM, City of Morro Bay, and Caltrans to determine and receive approval for the actions necessary and schedule to complete the repair of identified sections of public roadways to pre-construction conditions, or as near as possible. The project owner shall provide to the CPM, within 30 days of receipt letters from Caltrans and the City of Morro Bay stating their satisfaction with the road improvements.

TRANS-5 During construction of the power plant and all related facilities, the project shall enforce a policy that all project-related parking occurs in designated off road parking areas.

Verification: At least sixty days prior to start of site preparation or earth moving activities, the project owner shall submit a parking and staging plan for all phases of project construction to the City of Morro Bay for review and comment, and to the CPM for review and approval.

TRANS-6 The project shall develop a construction Transportation Management Plan to limit construction traffic impacts in conjunction with Caltrans and City of Morro Bay. Specifically, this plan shall include the following components:

- prohibiting the transport of hazardous material on roadway segments that have residential uses fronting them;

- establishing construction work hours outside of the peak traffic periods to ensure that construction workforce traffic occurs during off-peak hours;
- scheduling of heavy vehicle equipment and building materials deliveries to occur during off-peak hours;

Verification: At least 30 days prior to start of site preparation or earth moving activities, the project owner shall provide to Caltrans and City of Morro Bay for review and comment, and to the CPM for review and approval, a copy of their construction Transportation Management Plan.

TRANS-7 The project shall mitigate expected LOS D operations at the intersection of Main Street at Atascadero Road to acceptable LOS C or better conditions during the p.m. peak hour under cumulative conditions by reconfiguring the eastbound approach (Atascadero Road) to include a left turn lane and a shared through-right turn lane;

Verification: At least 60 days prior to start of site preparation or earth moving activities, the project owner shall provide to the City of Morro Bay for review and comment, and to the CPM for review and approval, improvement plans for the intersection of Main Street at Atascadero Road.

REFERENCES

CEC (California Energy Commission/Lewis) Applicant Response to Data Requests submitted to California Energy Commission/Lewis, March 7, 2001.

CEC (California Energy Commission/Lewis) Applicant Response to Data Requests submitted to California Energy Commission/Lewis, April 11, 2001.

CEC (California Energy Commission/Fore) Issue Identification Report submitted to California Energy Commission/Lewis, February 8, 2001.

City of Morro Bay General Plan Circulation Element, 1988.

City of Morro Bay Coastal Land Use Plan, Local Coastal Program, 1995

City of Morro Bay, Public Services Department, Muick, Personal Communication, April, 2001.

City of Morro Bay, Public Services Department, Seale, Personal Communication, April, 2001.

Higgins Associates, Duke Energy Morro Bay Power Plant Application for Certification Traffic Analysis Report, 2000.

Highway Capacity Manual, Special Report 209, Transportation Research Board, Washington D.C., 1994.

Highway Capacity Manual, Special Report 209, Transportation Research Board, Washington D.C., 1997.

DUKE (Duke Energy Morro Bay LLC) 2000a. Application for Certification, Volumes 1a-1b, II-IV, Morro Bay Power Plant Project (00-AFC-12). Submitted to the California Energy Commission on October 23, 2000.

TRANSMISSION LINE SAFETY AND NUISANCE

Obed Odoemelam, Ph.D.

INTRODUCTION

The energy from the Morro Bay Power Plant (MBPP) modernization project will be delivered to the Pacific Gas and Electric (PG&E) 230 kV transmission grid through the same PG&E-owned Morro Bay Switchyard and 230 kV lines currently used for the existing MBPP generating units. The post-modernization transmission will be made at the existing voltage, meaning that there would be no change to the system's electric fields. The only change to the system would be the flow of the additional energy that would result from the proposed modernization. Since magnetic fields are produced during current flow, this added energy would increase the intensity of magnetic fields in the existing system. The purpose of this analysis is to assess the proposed power delivery system to determine whether further field-reducing measures would be necessary to maintain post-modernization exposures within levels associated with similar lines designed according to applicable laws, ordinances, regulations and standards (LORS). Staff's analysis will focus on the issues noted below which relate primarily to the physical presence of each line, or secondarily to the physical interactions of its electric and magnetic fields.

- Aviation safety;
- Interference with radio-frequency communication;
- Audible noise;
- Fire hazards;
- Hazardous shocks;
- Nuisance shocks; and
- Electric and magnetic field (EMF) exposure

LAWS, ORDINANCES, REGULATIONS AND STANDARDS (LORS)

Discussed below by subject area are design-related federal or state LORS and industry standards and practices applicable to the physical impacts of the MBPP-related lines and transmission systems in general. There presently are no local laws or regulations specifically applicable to the physical structure or dimensions of electric power lines to limit the impacts noted above.

AVIATION SAFETY

Any hazard to area aircraft relates to the potential for collision with the line in the navigable air space. The applicable federal LORS as discussed below are intended to ensure the distance and visibility necessary to prevent such collisions.

FEDERAL

- Navigation Space". Provisions of these regulations specify the criteria used by the Federal Aviation Administration (FAA) for determining whether a "Notice of Proposed Construction or Alteration" is required for potential obstruction hazards. The need for such a notice depends on factors related to the height of the structure, the slope of an imaginary surface from the end of nearby runways to the top of the structure, and the length of the runway involved. Such notification allows the FAA to ensure that the structure is located to avoid any significant hazards to area aviation.
- FAA Advisory Circular (AC) No. 70/460-2H, "Proposed Construction and or Alteration of Objects that may Affect the Navigation Space". This circular informs each proponent of a project that could pose an aviation hazard of the need to file the "Notice of Proposed Construction or Alteration" (Form 7640) with the FAA.
- FAA AC No. 70/460-1G, "Obstruction Marking and Lighting". This circular describes the FAA standards for marking and lighting objects that may pose a navigation hazard as established using the criteria in Title 14, Part 77 of the CFR.

INTERFERENCE WITH RADIO-FREQUENCY COMMUNICATION

Transmission line-related radio-frequency interference is one of the perceivable impacts produced by the line's electric fields. The level of such interference usually depends on the magnitude of the electric fields involved. Because of this, the potential for such impacts could be assessed from field strength or intensity estimates obtained for the line. The following regulations are intended to ensure that such lines are located away from areas of potential interference and that any interference is mitigated whenever it occurs.

FEDERAL

- Federal Communications Commission (FCC) regulations in Title 47 CFR, Section 15.25. Provisions of these regulations prohibit operation of any devices producing force fields, which interfere with radio communications, even if (as with transmission lines) such devices are not intentionally designed to produce radio-frequency energy. Such interference is due to the radio noise produced by the action of the electric fields on the surface of the energized conductor. The process involved is known as corona discharge but is referred to as spark gap electric discharge when it occurs within gaps between the conductor and insulators or metal fittings. When generated, such noise manifests itself as perceivable interference with radio or television signal reception or interference with other forms of radio communication. Since the level of interference depends on factors such as line voltage, distance from the line to the receiving device, orientation of the antenna, signal level, line configuration and weather conditions, maximum interference levels are not specified as design criteria for modern transmission lines. The FCC requires each line operator to mitigate all complaints about interference on a case-specific basis. Staff usually

recommends specific conditions of certification to ensure compliance with this FCC requirement.

STATE

- General Order 52 (GO-52), California Public Utilities Commission (CPUC). Provisions of this order govern the construction and operation of power and communications lines and specifically deal with measures to prevent or mitigate inductive interference. Such interference is produced by the electric field induced by the line in the antenna of a radio signal receiver.

Several design and maintenance options are available for minimizing these electric field-related impacts. When incorporated in the line design and operation, such measures also serve to reduce the line-related audible noise discussed below.

AUDIBLE NOISE

INDUSTRY STANDARDS

There are no design-specific federal regulations to limit the audible noise from transmission lines. As with radio noise, such noise is limited instead by using design and maintenance standards established from industry research and experience as effective without significant impacts on line safety, efficiency maintainability and reliability. All high-voltage lines are designed to assure compliance. Such noise usually results from the action of the electric field at the surface of the line conductor and could be perceived as a characteristic crackling, frying or hissing sound or hum. Since (as with communications interference) the noise level depends on the strength of the line electric field, the potential for occurrence can be assessed from estimates of the field strengths expected during operation. Such noise is usually generated during wet weather and from lines of 345 kV or higher. Research by the Electric Power Research Institute (EPRI 1982) has validated this by showing the fair-weather audible noise from modern transmission lines to be generally indistinguishable from background noise at the edge of a 100-ft right-of-way.

NUISANCE SHOCKS

INDUSTRY STANDARDS

There are no design-specific federal regulations to limit nuisance shocks in the transmission line environment. For modern high-voltage lines, such shocks are effectively minimized through grounding procedures specified in the National Electrical Safety Code and the joint guidelines of the American National Standards Institute (ANSI) and the Institute of Electrical and Electronics Engineers (IEEE). Nuisance shocks are caused by current flow at levels generally incapable of causing significant physiological harm. They result mostly from direct contact with metal objects electrically charged by fields from the energized line. Such electric charges are induced in different ways by the line electric and magnetic fields. The line owner is responsible in all cases for ensuring compliance with these grounding-related practices within the right-of-way. Staff usually recommends specific

conditions of certification to ensure that such grounding is made within the right-of-way by both the applicant and property owners.

FIRE HAZARDS

The fire hazards addressed through the following regulations are those that could be caused by sparks from conductors of overhead lines or that could result from direct contact between the line and nearby trees and other combustible objects.

STATE

- General Order 95 (GO-95), CPUC, "Rules for Overhead Electric Line Construction" specifies tree-trimming criteria to minimize the potential for power line-related fires.
- Title 14 Section 1250 of the California Code of Regulations, "Fire Prevention Standards for Electric Utilities" specifies utility-related measures for fire prevention.

HAZARDOUS SHOCKS

The hazardous shocks that are addressed by the following regulations and standards are those that could result from direct or indirect contact between an individual and the energized line. Such shocks are capable of serious physiological harm or death and remain a driving force in the design and operation of transmission and other high-voltage lines.

STATE

- GO-95, CPUC. "Rules for Overhead Line Construction". These rules specify uniform statewide requirements for overhead line construction regarding ground clearance, grounding, maintenance and inspection. Implementing these requirements ensures the safety of the general public and line workers.
- Title 8, Sections 2700 through 2974, "High Voltage Electric Safety Orders" of the California Code of Regulations. These safety orders establish essential requirements and minimum standards for safely installing, operating, working around, and maintaining electrical installations and equipment.

INDUSTRIAL STANDARDS

There are no design-specific federal regulations to prevent hazardous shocks from power lines. Safety is assured through compliance with the requirements in the National Electrical Safety Code, Part 2: Safety Rules for Overhead Lines. These provisions specify the minimum national safe operating clearances applicable in areas where the line might be accessible to the public. They are intended to minimize the potential for direct or indirect contact with the energized line.

ELECTRIC AND MAGNETIC FIELD (EMF) EXPOSURE

The possibility of deleterious health effects from electric and magnetic field exposure has increased public concern in recent years about living near high-voltage lines. Both fields occur together whenever electricity flows, hence the

general practice of considering both together as EMF exposure. As noted by the applicant, Duke Morro Bay LLC, (Duke 2000a, pages 6.18-11), the available evidence as evaluated by CPUC and other regulatory agencies has not established that such fields pose a significant health hazard to exposed humans. However, staff considers it important, as does the CPUC, to note that while such a hazard has not been established from the available evidence, the same evidence does not serve as proof of a definite lack of a hazard. Therefore, staff considers it appropriate, in light of present uncertainty, to reduce the strengths of such fields where feasible, until the issue is better understood. The challenge has been to establish when and how far to reduce them.

While there is considerable uncertainty about the EMF health effects issue, the following facts have been established from the available information and have been used to establish existing policies:

- Any exposure-related health risk to the exposed individual will likely be small.
- The most biologically significant patterns of exposures have not been established.
- Most health concerns relate to the magnetic field.
- The measures employed for such field reduction can affect line safety, reliability, efficiency and maintainability, depending on the type and extent of such measures.

STATE

In California, the CPUC (which regulates the installation and operation of high-voltage lines in California) has determined that only no-cost or low-cost measures are presently justified in any effort to reduce power line fields below levels existing before the present health concern arose. The CPUC has further determined that such reduction should be made only in connection with new or modified lines. It required PG&E and the other utilities within its jurisdiction to establish EMF-reducing design guidelines for all new or upgraded power lines and related facilities within their respective service areas. The CPUC further established specific limits on the resources to be used for each new or upgraded line with regard to redesign to reduce field strengths or relocation to reduce exposure levels. Utilities not within the jurisdiction of the CPUC voluntarily comply with these CPUC requirements. This CPUC policy resulted from assessments made to implement CPUC Decision 93-11-013 of 1989.

In keeping with this CPUC policy, the Energy Commission staff requires field strength calculations showing that each proposed line will be designed or upgraded according to the EMF-reducing design guidelines applicable to the utility service area involved. These field-reducing measures can impact line operation if applied without appropriate regard for environmental and other local issues bearing on safety, reliability efficiency and maintainability. Therefore, it is up to each applicant to ensure that such measures are applied in ways that do not affect line operation.

The extent of the field-reducing measures will be reflected by ground-level field strengths as calculated in the application process and verified through actual measurements during operation. When estimated or measured for each line, such field strengths can be used by staff and other regulatory agencies for comparison with fields of lines of similar voltage and current-carrying capacity. These field strength estimates can be made using established procedures. Estimates are specified for a height of one meter above the ground, in units of kilovolts per meter (kV/m), for the electric field, and milligauss (mG) for the companion magnetic field. Their magnitude depends on line voltage (in the case of electric fields), the geometry of the structures, degree of cancellation from nearby conductors, distance between conductors and, in the case of magnetic fields, amount of current in the line.

Since each new or modified line in California is currently required to be designed according to the EMF-reducing guidelines of the utility in the service area involved, its fields are required under existing CPUC policies to be similar, in intensity, to fields from similar lines in that service area. A condition of certification is usually proposed by staff to ensure implementation of the reduction measures necessary.

INDUSTRIAL STANDARDS

No federal regulations have been established specifying environmental limits on the strengths of fields from power lines. However, the federal government continues to conduct and encourage research necessary for an appropriate policy on the EMF issue.

In the face of the present uncertainty, several states have opted for design-driven regulations ensuring that fields from new lines are generally similar in intensity to those from existing lines. Some states (Florida, Minnesota, Montana, New Jersey, and New York) have set specific environmental limits on one or both fields in this regard. These limits are, however, not based on any specific health effects. Most regulatory agencies believe, as does staff, that health-based limits are inappropriate at this time. They also believe that the present knowledge of the issue does not justify any retrofit of existing lines.

Before the present health-based concern developed, measures to reduce field effects from power line operations were mostly aimed at the electric field component, whose effects can manifest themselves as the previously noted radio noise, audible noise and nuisance shocks. The present focus is on the magnetic field because only it can penetrate building materials to potentially produce the types of health impacts at the root of the present concern. As one focuses on the relatively strong magnetic fields from the more visible transmission and other high-voltage power lines, staff considers it important for perspective, to note that an individual in a home could be exposed for short periods to much stronger fields while using some common household appliances (National Institute of Environmental Health Services and the U.S Department of Energy, 1995). Scientists have not established which of these types of exposures would be more biologically meaningful in the individual. Staff notes such exposure differences only

to show that high-level magnetic field exposures regularly occur in areas other than the power line environment.

SETTING

As discussed by the applicant (Duke 2000a, pages 6.18-1, 6.18-2, and 6.18-5), the existing PG&E Morro Bay Switchyard (to also be used for post-modernization power delivery to the PG&E power grid) serves as a power distribution center from which the generated power is transmitted to regional substations (Gates, Mesa, Morro Bay, Midway, San Luis Obispo, and Templeton) in various central California locations. These substations also receive electric power from other power stations in California and provide electric power to communities in their general vicinity. These lines are owned and maintained by PG&E and are to be used without modification with respect to the modernized MBPP. As part of the PG&E power grid, the MBPP-related lines pass near residential areas and also extend through farmland and open space after exiting the Morro Bay Switchyard (Duke 2000a, page 6.9-11).

The applicant has provided a detailed listing of the five existing system 115kV and 230 kV transmission lines through which power from the modernized plant will be transmitted. The applicant has also identified the specific communities that are served and will continue to be served by each line some of which have been operated since the 1950s (Duke 2000a, pages 6.18-1, through 6.18-5). These lines are typically supported by 100-150-foot towers, as are similar lines in the PG&E service area. The applicant (Duke 2000a, Appendix 6.18-1) has provided the details of their structures as specifically related to effectiveness at field strength reduction. The lengths of the lines (from the PG&E Morro Bay Switchyard to the regional substations) range from approximately 14 miles to 80 miles. As is current practice at MBPP, the power in the post-modification phase will be transmitted in each line at levels that would depend on prevailing need conditions throughout the grid. These lines are located within separate rights-of-way in some areas but share the same rights-of-way with nearby lines in other areas (Duke 2000a, page 6.18-9).

IMPACTS

GENERAL IMPACTS

GO-95 and Title 8, CCR Section 2700 et seq. provide the minimum regulatory requirements necessary to avoid the direct or indirect contact previously discussed in connection with hazardous shocks and aviation hazards. Of secondary concern are the field-related impacts manifesting as nuisance shocks, radio noise, communications interference and magnetic field exposure. The relative magnitude of such impacts would be reflected in the field strengths characteristic of a given line design. Since the field strength-reducing measures can affect line operations, the extent of their implementation, together with related field strengths, will vary according to environmental and other local conditions bearing on line safety, efficiency, reliability and maintainability. They will, therefore, vary from one service area to the other according to prevailing conditions. It is up to each project

proponent to apply such measures (to each new or upgraded line) to the extent appropriate for the geographic area involved. It is such field-reducing measures that staff would recommend for this project if we were to find these fields to be of higher intensities than we consider appropriate for such lines. The potential for each type of impact is assessed separately for each proposed project.

PROJECT SPECIFIC IMPACTS

IMPACTS FROM PHYSICAL PRESENCE

The existing MBPP-related transmission system (to be used for the modernized version) was designed by PG&E according to PG&E's guidelines bearing on aviation safety, fire hazards, and hazardous shocks. Therefore, staff considers the use of this system in the post-modification era to be safe with regard to these impacts. We do not recommend any of the safety-related conditions of certification normally required for new or upgraded lines.

ELECTRIC FIELD EFFECTS

The potential for electric field-related audible noise, nuisance shocks and interference with radio-frequency communication depends on electric field strengths which, in turn, depend on line voltage. Since (a) there will be no change in the voltage of the existing lines and (b) these lines were designed and are presently maintained by PG&E according to PG&E requirements bearing on these electric field effects, staff considers their proposed use in the post-modernization era to be appropriate with regard to these perceivable electric field effects.

ELECTRIC AND MAGNETIC FIELD EXPOSURE

The fields from the existing lines are the ones that humans will be exposed to along their respective routes. The applicant calculated the maximum electric and magnetic field strengths possible along the routes of the lines to be affected by the increased power generation (Duke 2000a, page 6.18-10). Staff has verified the accuracy of the applicant's calculations with regard to factors bearing on field strength and exposure assessment. The applicant calculated the maximum electric field strengths for the existing and post-modernization conditions along these routes as a way to demonstrate that these fields will not change without changes to the system's voltage. These calculated values range from 0.10 kV/m to 1.18 kV/m at the edge of the rights-of-way. The maximum value within the right of way is 7.06 kV/m. These values are typical of existing PG&E lines of similar voltage.

To assess the project-related increments in magnetic field exposure, magnetic field levels were calculated by the applicant for the existing and post-modification power flow conditions. Existing magnetic fields were calculated to range from 4.8 mG to 43.8 mG at the edge of the right-of-way. The maximum value within the rights-of-way is 126.9 mG. Maximum fields for the post-modification period range from 4.9 mG to 51.8 mG at the edge of the rights-of-way and from 66.1 mG to 127.2 mG within the rights-of-way. These field strength increments are as staff would expect in PG&E-designed lines for the increased current flow associated with the modification proposed. The calculated maximum values of 66.1 mG to 127 mG for

the post-modernization period are within the range associated with PG&E lines of similar voltage and current-carrying capacity. These values as further noted by the applicant (Duke 2000a pages 6.18-10) are within the average range of 150 mG to 250 mG established for transmission line right-of-way by the states with regulatory limits.

CUMULATIVE IMPACTS

Calculations to assess the field impacts of operating the modernized MBPP were made to reflect the interactive impacts of fields from all the lines along the route of the proposed power delivery system. Therefore, any exposures along the route would reflect exposures of a cumulative nature. Since no separate transmission system is proposed in connection with the proposed modernization project, these calculated field values reflect all system exposures of a cumulative nature. As reflected in the calculated values, any such exposures would be similar to exposures associated with similar systems within the PG&E service area.

CONCLUSIONS AND RECOMMENDATIONS

CONCLUSIONS

Since electric or magnetic field health effects have neither been established nor ruled out for the MBPP-related and similar transmission lines, the public health significance of any existing or post-modernization exposure cannot be characterized with certainty. However, the available evidence, as previously noted, has not established that these lines pose a significant health risk to humans at normally encountered levels. Although the additional current from the proposed modernization will increase the magnetic fields within some of the lines in the existing transmission grid, the calculated field strengths suggest that exposure to these fields would be within the range typical of PG&E lines of the same voltage and current-carrying capacity. Maintaining exposure within typical levels would be in keeping with the CPUC policy on the field exposure issue. The potential for nuisance shocks and other field-related impacts will continue to be minimized through current PG&E maintenance practices which reflect compliance with GO-90 and Title 8, Section 2700 et seq. of the California Code of Regulations. Since these lines were designed according to PG&E requirements for preventing aviation hazards, staff considers their continued use in the post-modernization period to be safe in this regard.

RECOMMENDATIONS

Since (a) the modernized Morro Bay Power Plant is proposed to be operated without significant modifications to the existing transmission system and (b) the project's operation will result in magnetic field exposure within ranges typical of similar PG&E transmission systems, staff recommends the use of the existing transmission system in the post-modernization era, without additional modifications. Staff recommends the following conditions of certification to verify the accuracy of the applicant's assumptions with respect to post-modification field strengths.

CONDITIONS OF CERTIFICATION

TLSN-1 The project owner shall engage a qualified consultant to measure the strengths of line electric and magnetic fields at the points along the routes for which the applicant provided estimates. The pre-construction measurements could be made any time before operations but the post-modernization measurements shall be made no later than 60 days after the start of operations.

Verification: The project owner shall file copies of the pre-and post-energization measurements with the CEC Compliance Manager 60 days after the post-modernization measurements are completed.

REFERENCES

Duke (Duke Energy Morro Bay LLC) 2000a. Application for Certification, Volumes 1a-1b,and II-IV, Morro Bay Power Plant Project (00-AFC-12). Submitted to the California Energy Commission, October 23, 2000.

Electric Power Research Institute (EPRI) 1982. Transmission Line Reference Book: 345 kV and Above

Energy Commission Staff 1992. High Voltage Transmission Lines: Summary of Health Effects Studies. California Energy Commission Publication No. P700-92-002

National Institute of Environmental Health Services 1998. An Assessment of the Health Effects from Exposure to Power-Line Frequency Electric and Magnetic Fields. A Working Group Report, August, 1998.

VISUAL RESOURCES

Michael Clayton

SUMMARY

Energy Commission staff analyzed both the potential visual impacts of the proposed Morro Bay Power Plant Project (MBPP) and the compliance of the project with applicable laws, ordinances, regulations, and standards. Staff concludes that from most public areas with views of the existing power plant and proposed project site, the proposed project would result in an overall long-term improvement in visual quality.

Staff has also concluded that the proposed project would cause adverse visual impacts during the six-year period of construction and demolition. However, given the long-term visual improvement that would occur with removal of the existing power plant, these interim construction impacts are not considered significant. One possible exception to this conclusion is the potential visual impact associated with the two offsite marshalling areas. The Applicant has indicated that the two marshalling areas are to be located south of the City of Morro Bay and adjacent to Highway 1, which is a state designated scenic highway. The precise location of these marshalling areas has not been identified and therefore, the significance of any resulting visual impacts cannot yet be determined. However, if the marshalling areas are prominent in views from Highway 1, significant visual impacts may result.

The proposed project also has the potential to cause long-term significant adverse visual impacts to Morro Strand State Beach and the Morro Dunes Trailer Park and Resort Campground. These long-term operational impacts would result from the project's contrasting appearance and foreground visibility. The project also has the potential to cause nighttime lighting impacts when viewed from the elevated perspectives of the Sunset Plateau and Harbor Front Tract residential areas. The significance of the potential lighting impacts cannot be determined at this time because the project is lacking a detailed lighting plan.

However, effective implementation of staff's proposed mitigation measures and conditions of certification would reduce the long-term significant adverse visual impacts and any potential nighttime lighting impacts to levels that are not significant.

An opinion on the proposed project's consistency with local programs and policies was received from the City of Morro Bay too late to be incorporated into this preliminary staff assessment. However, the preliminary consistency determination presented in this analysis indicates that of the sixteen local programs and policies identified as pertaining to visual resources, the proposed project was found to be potentially consistent with eight programs and policies and potentially inconsistent with the remaining eight programs and policies.

INTRODUCTION

Visual resources are the natural and cultural features of the environment that can be viewed. This analysis focuses on whether MBPP would cause significant adverse visual impacts and whether the project would be in conformance with applicable laws, ordinances, regulations, and standards. The determination of the potential for significant impacts to visual resources resulting from the proposed project is required by the California Environmental Quality Act (CEQA) Public Resources Code section 21000 et seq. and Title 20, California Code of Regulations, section 1701 et seq.1. The determination of the conformance of the proposed project with applicable laws, ordinances, regulations, and standards is required by Public Resources Code section 25525.

ORGANIZATION OF ANALYSIS

This analysis is organized as follows:

- Description of analysis methodology;
- Description of applicable laws, ordinances, regulations and standards;
- Description of the project aspects that may have the potential for significant visual impacts;
- Assessment of the visual setting of the proposed power plant site and related facilities;
- Evaluation of the visual impacts of the proposed project on the existing setting;
- Evaluation of compliance of the project with applicable laws, ordinances, regulations, and standards;
- Identification of measures needed to mitigate any potential significant adverse impacts of the proposed project and to achieve compliance with applicable laws, ordinances, regulations, and standards.
- Conclusions and Recommendations; and
- Proposed Conditions for Certification

ANALYSIS METHODOLOGY

Visual resources analysis has an inherent subjective aspect. However, the use of generally accepted criteria for determining impact significance and a clearly described analytical approach aid in developing an analysis that can be readily understood.

SIGNIFICANCE CRITERIA

Commission staff considered the following criteria in determining whether a visual impact would be significant.

STATE

The CEQA Guidelines defines a “significant effect” on the environment to mean a “substantial, or potentially substantial, adverse change in any of the physical conditions within the area affected by the project including . . . objects of historic or aesthetic significance (Cal. Code Regs., tit.14, § 15382).

1 The California Energy Commission's power plant siting regulations.

Appendix G of the Guidelines, under Aesthetics, lists the following four questions to be addressed regarding whether the potential impacts of a project are significant:

1. Would the project have a substantial adverse effect on a scenic vista?

2. Would the project substantially damage scenic resources, including, but not limited to, trees, rock outcroppings, and historic buildings within a state scenic highway?

3. Would the project substantially degrade the existing visual character or quality of the site and its surroundings?

4. Would the project create a new source of substantial light or glare that would adversely affect day or nighttime views in the area?

LOCAL

Energy Commission staff considers any local goals, policies, or designations regarding visual resources. Conflicts with such laws, ordinances, regulations, and standards can constitute significant visual impacts. See the section on Applicable Laws, Ordinances, Regulations, and Standards.

PROFESSIONAL STANDARDS

Professionals in visual impact analysis have developed a number of questions as a means of evaluating the potential significance of visual impacts (see Smardon 1986). The questions listed below address issues commonly raised in visual analyses for energy facilities. Staff considers these questions in assessing whether a project would cause a significant impact in regard to any of the four CEQA criteria listed above.

- Will the project substantially alter the existing viewshed, including any changes in natural terrain?

- Will the project deviate substantially from the form, line, color, and texture of existing elements of the viewshed that contribute to visual quality?

- Will the project eliminate or block views of valuable visual resources?

- Will the project result in significant amounts of backscatter light into the nighttime sky?

- Will the project be in conflict with directly identified public preferences regarding visual resources?

- Will the project result in a significant reduction of sunlight, or the introduction of shadows, in areas used extensively by the community?

- Will the project result in a substantial and persistent visible exhaust plume?

VIEW AREAS AND KEY OBSERVATION POINTS

The proposed project would be visible from a number of areas in the project region. Energy Commission staff selected a representative subset of these locations from which to evaluate the potential visual impacts of the project. Staff used Key Observation Points2, or KOPs, as locations in these areas for detailed analysis and photographs of the existing setting and visual simulations of the proposed project. KOPs are selected to be representative of the most critical locations from which the project would be seen. However, KOPs are not the only locations that staff considered in each view area.

EVALUATION PROCESS

During the preparation of the Application for Certification, the Applicant consulted with the City of Morro Bay and local residents with regard to the selection of KOPs. Following staff's review of the selected viewpoints and the Applicant's addition of a viewpoint to evaluate impacts on Highway 1, the total number of KOPs was 20. For each of the 20 KOPs, the Applicant prepared existing conditions photographs and proposed project simulations and conducted a view blockage analysis. Upon reviewing the Applicant's findings and simulations, staff determined that there were a number of KOPs from which visibility of the existing power plant and proposed project would be limited by distance. There were also several KOPs where views of the proposed project are limited by intervening screening from vegetation or structures. For all of these locations the visual change was determined to be positive since the project would result in a reduction of visible industrial structures and view blockage. The view characteristics from each of these additional view areas are summarized in a later section of this analysis and their respective photographs and simulations are provided in Appendix C.

The selection of a smaller subset of the original 20 KOPs was determined to be more effective in focusing the visual analysis on the key visual parameters of concern. Each of the subset of selected KOPs was subjected to a more rigorous visual analysis including an evaluation of the existing visual setting and the visual changes that the project would cause, leading to a determination of impact significance. Specific visual parameters that were evaluated included visual quality, viewer concern, viewer exposure, visual contrast, project dominance, and view blockage. Each of these visual parameters is discussed below. Additionally, the potential for visual impacts resulting from plume formation, night lighting, and construction activities was also assessed. The results of staff's analysis are summarized in the Visual Analysis Summary presented in Appendix A and discussed in detail in subsequent sections of this analysis. Existing conditions photographs and photosimulations from each of the selected KOPs are presented in Appendix B.

---

2 The use of KOPs or similar view locations is common in visual resource analysis. The US Bureau of Land Management and the US Forest Service use such an approach.

ELEMENTS OF THE VISUAL SETTING

To assess the existing visual setting, staff considered the following elements:

Visual Quality

Visual quality is an expression of the overall visual impression or appeal of a given landscape and the associated public value attributed to the visual resource. This analysis used an approach that considers visual quality as ranging from outstanding to low. Outstanding visual quality is a rating reserved for landscapes that would be what a viewer might think of as "picture postcard" landscapes. Low visual quality describes landscapes that are often dominated by visually discordant human alterations, and do not provide views that people would find inviting or interesting (Buhyoff et al., 1994).

Viewer Concern

Viewer concern is a measurement of the level of viewer interest regarding the visual resources in an area. Official statements of public values and goals reflect viewers' expectations regarding a visual setting. This analysis also employed land use as an indicator of viewer concern. Uses associated with: 1) designated parks, monuments, and wilderness areas; 2) scenic highways and corridors; 3) recreational areas; and 4) residential areas are generally considered to have high viewer concern. Travelers on other highways and roads, including those in agricultural areas, may have moderate concern depending on viewer expectations as conditioned by regional and local landscape features. Commercial uses, including business parks, typically have low-to-moderate concern, though some commercial developments have specific requirements related to visual quality, with respect to landscaping, building height limitations, building design, and prohibition of above-ground utility lines, that indicate high viewer concern. Industrial uses typically have the lowest viewer concern because workers are focused on their work, and generally are working in surroundings with relatively low visual value.

Viewer Exposure

The visibility of a landscape feature, the number of viewers, the duration of the view, and the viewing distance to the landscape feature affect the exposure of viewers to a given landscape feature. Visibility is highly dependent on screening and angle of view. The smaller the degree of screening and/or the closer the feature is to the center of the view area, the greater its visibility is. Increasing distance reduces visibility. Viewer exposure can range from low values for all factors, such as a partially obscured and brief background view for a few motorists, to high values for all factors, such as an unobstructed foreground view from a large number of residences.

Visual Sensitivity

The overall level of sensitivity of a view area to impacts due to visual change is a function of visual quality, viewer concern, and viewer exposure and can range from low to high.

TYPES OF VISUAL CHANGE

To assess the visual changes that the project would cause, staff considered the following factors:

Contrast

Visual contrast describes the degree to which a project's visual characteristics or elements (consisting of form, line, color, and texture) differ from the same visual elements established in the existing landscape. The degree of contrast can range from low to high. The presence of forms, lines, colors, and textures in the landscape similar to those of a proposed project indicates a landscape more capable of accepting those project characteristics than a landscape where those elements are absent. This ability to accept alteration is often referred to as visual absorption capability and typically is inversely proportional to visual contrast.

Dominance

Another measure of visual change is *project dominance*. Dominance is a measure of a feature's apparent size relative to other visible landscape features and the total field of view. A feature's dominance is affected by its relative location in the field of view and the distance between the viewer and the feature. The level of dominance can range from subordinate to dominant.

View Blockage

View blockage describes the extent to which any previously visible landscape features are blocked from view by the project. Blockage of higher quality landscape features by lower quality features causes adverse impacts. The degree of view blockage can range from none to strong.

LAWS, ORDINANCES, REGULATIONS, AND STANDARDS

FEDERAL

The proposed project is located on private land. Therefore, the project is not subject to federal land management requirements.

STATE

The proposed project is located adjacent to Highway 1—a State of California officially designated scenic highway. Official designation of a state scenic highway requires the local jurisdiction to enact a scenic corridor protection program that protects and enhances scenic resources. A properly enforced program can mitigate the effects of uses that might otherwise detract from the scenic values of the corridor landscape. A corridor protection program will typically stipulate specific siting, landscaping, and screening requirements; as well as require appropriate structural characteristics and surface treatments to make the development more compatible with the existing environment.

LOCAL

Local plans and policies relevant to visual resources are contained in the City of Morro Bay Land Use Plan of the Local Coastal Plan (LCP) and the City of Morro Bay General Plan (General Plan). The LCP sets policies, standards, and objectives to guide coastal land use decisions. The General Plan (with specific zoning ordinances) implements policies defined in the LCP.

The LCP addresses visual resources and community character, with the intent, as stated in the California Coastal Act, that "scenic and visual qualities of coastal areas are to be considered and protected as a resource of public importance with full consideration to private property rights." The LCP includes goals and policies to protect, restore, and where feasible enhance visual quality in visually degraded areas. It emphasizes that any development permitted in scenic areas should be designed and located to be visually compatible with, and subordinate to, the natural setting.

The General Plan incorporates and implements visual resource policies from the LCP. The General Plan policies related to visual resources include: Scenic Roadway Establishment; Protection of Coastal Area's Visual Resources; Implementation of LCP; Landscaping Standards; Property Maintenance Standards; Utility Undergrounding; and Roadside Amenities. For each policy, a number of specific programs are recommended.

A discussion of the proposed project's consistency with local plans and policies is provided in a later section of this analysis.

PROJECT DESCRIPTION

The following section describes the aspects of the project that may have the potential for significant visual impacts. These facilities include the power plant and administration buildings; electrical takeoff towers and transmission line structures; a 20-foot high, 1000 feet long sound wall; water intake building, and construction laydown areas.

POWER PLANT

The power plant would be located at the existing 107-acre, 1,030 MW Morro Bay Power Plant site that is owned and operated by Duke Energy. This site is located within the City of Morro Bay, San Luis Obispo County, near Morro Bay Harbor, bordered on the west by Embarcadero Road and on the east by Highway 1 (see **PROJECT DESCRIPTION Figures 3 and 4**). The new units would replace currently operating generation Units 1 and 2 (326 megawatts [MW], 1950's technology) and Units 3 and 4 (676 megawatts [MW], 1960's technology) with two state-of-the-art 600 MW combined cycle units. Each new unit would consist of two gas-fired turbines and one steam turbine. Each new unit would have two 145-foot tall stacks (four stacks total) compared with the existing plant's three 450-foot tall stacks. **VISUAL RESOURCES Figure 1** (see Appendix B) presents a comparison of the sizes of the proposed and existing structures.

The proposed project would occupy approximately eight acres of the MBPP property and would include demolition of the on site fuel oil tank farm, all existing power plant equipment (boiler – steam turbine complex), and removal of three 450 feet tall exhaust stacks. Stage one—demolition of the tank farm – would take three months and be complete in 2002. Stage two—demolition of the three 450 foot stacks – would begin after commercial operation of the new units and will be complete in 2004. Stage three—dismantling of the existing units – would be complete by the end of 2007.

The most visually prominent elements of the new power plant would be the 145-foot tall heat recovery steam generator (HRSG) exhaust stack structures, the four 95-foot tall HRSGs, the four 70-foot tall gas turbine generator (GTG) air inlets, the two 52-foot tall steam turbine generators (STGs), the 34-tall administration/warehouse and control room, and the 20-foot high, 1,000-foot long sound wall (see **VISUAL RESOURCES Figure 2** in Appendix B).

TRANSMISSION LINE STRUCTURES

Most of the power produced by the project would be delivered to MBPP's interconnection with the existing PG&E Morro Bay Switchyard via new transmission ties. The H-frame takeoff structures would be 40 feet tall at the cross member and 50 feet tall at the tops, increasing to 100 feet tall on the north side to clear the pipe rack. The line would transition to 88-foot tall transmission line structures that carry the conductors to the existing PG&E switchyard on the site.

WATER INTAKE BUILDING

VISUAL RESOURCES Figures 3 and 4 depict the proposed architectural treatments that would be applied to the existing water intake building to make it more architecturally consistent and visually compatible with the Morro Bay waterfront. The updated design consists of vertical board and batten exterior siding, pitched metal roofs with dormers, and new pedestrian scale window treatments. The exterior colors are proposed to be muted gray tones with white trim detailing that blends with the existing color and patterns established on the Embarcadero (DUKE 2000j). The proposed design treatment would increase the structure's height from 46 feet to 63 feet.

CONSTRUCTION LAYDOWN AREAS

Several construction laydown areas would be located onsite at MBPP. These areas are located south and west of the existing switchyard, and north, south, and west of the proposed plant site. Additionally, construction parking would be located adjacent and to the north of the existing power building and an optional batch plant could be situated immediately south of the existing switchyard.

In addition to the onsite laydown areas, the Applicant is pursuing leases for two offsite areas for material holding, laydown, and marshalling. One 10-acre area near a rail siding would be for temporary holding of large HRSG components. A 20-acre parcel would be used as a marshalling area and would be the preferred delivery site

for most large truck deliveries. Both areas are proposed to be located adjacent to Highway 1, south of the City of Morro Bay (DUKE 2000a, p. 2-63).

SETTING

REGIONAL LANDSCAPE

The project region is within the southernmost portion of the Coast Range Geomorphic Province, which is characterized by a sequence of northwest trending mountains and valleys. The MBPP is located in the City of Morro Bay, 12 miles northwest of the City of San Luis Obispo. The project area is situated between the shoreline of Estero Bay to the west and the coastal foothills of the Santa Lucia Range to the east. The Morro Bay area includes diverse natural features, including the ocean and long beaches, bay, sand spit, wetlands, and harbor areas. Morro Rock, a major focal point of the area, rises abruptly from the ocean's near-shore waters. One-half mile east of the rock is the MBPP, with its large building and three tall stacks. The City of Morro Bay surrounds the plant on three sides, with grassy, rolling coastal hills surrounding the city (DUKE 2000a, p. 6.13-1).

Nine distinct landscape character units have been defined within the general vicinity of MBPP: (1) Grassy Coastal Hills (to the east of the site); (2) Ancient Volcanic Hills (a chain of 14 volcanic peaks extending to the southeast and including Morro Rock and Black Mountain); (3) Valley Floor (including the agricultural lands extending along the Highway 1 and 41 corridors); (4) Ocean, Beach, and Dunes (west of the City of Morro Bay); (5) Estuary, Wetlands, and Lowlands Complex (bordering Morro Bay to the south of the City); (6) Residential Neighborhoods (approximately 15 local neighborhoods situated to the north, east, and south of MBPP); (7) the Industrial Area (the immediate vicinity of MBPP bordered by Morro Bay High School on the north, Highway 1 on the east, MBPP on the south, and the dunes and beach on the west); (8) Morro Bay and the Harbor Area (to the west and south of the City); and (9) Other Developed Areas (see **VISUAL RESOURCES Figure 5**).

The ocean expanse, the more intimate environs of Morro Bay defined by the low-lying sand spit and harbor activities, the rolling grass-covered coastal hills, the linear ribbon of sand comprising Morro Strand State Beach, and the dramatic prominence of Morro Rock all contribute visual variety to a unique coastal landscape.

The general region is also subject to the influences of the coastal marine environment in which reduced visibility due to fog and haze sometimes occurs. Between September 30, 1997 and May 31, 1999, there were 53 days when visibility from the Morro Bay Harbor Department office was one mile or less during the day, typically due to rain or fog. According to the Continental Weather Service, periods of reduced visibility tend to occur more frequently from May to October than at other times of the year (DUKE 2000a, p. 6.13-33).

POWER PLANT REGIONAL VIEWSHED

The MBPP is located on the west side of town, where Morro Creek meets the ocean, between Highway 1 and the Morro Bay shoreline. The project site is located

on the northwestern side of the 107-acre MBPP property. The existing power plant is visually prominent in the region due to the three 405-foot tall exhaust stacks. **VISUAL RESOURCES Figure 6** shows the approximate area from which the existing stacks are visible. This image is based solely on topographic variation and does not consider the effects of view screening by vegetation and structures. As shown on the map, the existing stacks are visible as far north as Cayucos, to the east along Highways 1 and 41, and south to Los Osos. The majority of viewers within this viewshed consist of residents, motorists on Highway 1, and recreationists and tourists on the beaches and Bay. The following paragraphs identify the general viewing areas within the MBPP viewshed.

COASTAL AREAS NORTH OF TORO CREEK TO CAYUCOS

This area has distant views ranging from three to seven miles. Most views from this area are over the water, though some of the nearer views (from near Toro Creek) view directly down the beach. At this distance, the stacks and the main structure are barely discernable on clear days. Most of the 2,900 people in this area live along the coast within the plant viewshed.

NORTH MORRO BAY

Views of the plant in this area are diverse in distance, ranging from views abutting the plant to those from a distance of approximately 2.5 miles. The population in the North Morro Bay area is approximately 4,100 people. This area generally encompasses the beach and flatlands north of the site and west of Highway 1 as well as the highlands north of the site and west of Highway 1. The City Planning Areas within this portion of the viewshed include North Morro Bay, Atascadero Beach, and Del Mar. Views of the site from residences in the low lands are frequently partially obscured by other homes and trees. Many views from highland residences (such as Sunset Plateau and Morro Del Mar Subdivisions 1 & 2) are unobstructed. In the vicinity of Morro Strand State Beach Campground, single-family homes along Beachcomber Drive and parts of Sandalwood Avenue have ocean views that extend as far south as the project site with some views being partially obscured. Closer in to the site, views from The Cloisters residential development are partially obscured by vegetation around Morro Bay High School. In these more distant views, the existing stacks are still prominent features in the viewshed.

HIGHWAY 41 CORRIDOR

Views from Highway 41 range from a closest distance of approximately four-tenths of a mile, extending out to approximately 3.5 miles. The land uses in this area are mostly agricultural and populations are low. Most viewers in this area are motorists driving westbound on Highway 41, where average Annual Daily Traffic is 4,400 vehicles. Views of the plant are intermittent. The stacks can also be seen from more distant vantage points on westward-facing slopes and hilltops.

MORRO HIGHLANDS

The Morro Highlands are located along the hill slopes east of Highway 1, extending from Highway 41 in the north to the city boundary in the south. The viewing

distance to the project site ranges from approximately three-tenths of a mile to two miles. Many of the views of the project site from the Morro Highlands are from the Harbor Front Tract residential area and are direct and unobstructed. Approximately 700 people live within this area.

HIGHWAY 1 CORRIDOR

Highway 1 between Morro Bay and San Luis Obispo follows the agricultural valley floor, which is directed toward the power plant. This highway alignment allows for direct views of relatively long duration for motorists approaching the plant from the south. Similarly, motorists approaching the site from the north are afforded relatively direct and extended views of the site. Viewing distances range from approximately 0.25 mile at the closest point to the proposed plant to approximately six miles to the south and five miles to the north.

SOUTH MORRO BAY

The neighborhoods of Old Town Morro Bay, within General Plan Areas 6 and 7, have a relatively high combined population of about 4,300 people. Viewing distances range from approximately 0.35 mile to 1.75 miles. The closest views from this area are from Scott Street, southeast of the power plant. Other direct views are from the Embarcadero and Bayfront areas. The most distant views are to the south near Fairbank Point. Structures and mature landscaping within the historic center of town partially obscure some views of MBPP.

LOS OSOS AND MORRO BAY

Views from Los Osos and Baywood Park are approximately three miles distant. According to the 1990 Census for Los Osos, 7,100 people live approximately three to four miles from the plant, 5,900 people live approximately four to five miles away, while an additional 1,700 people live beyond the five-mile study boundary illustrated in **VISUAL RESOURCES Figure 6**. As in other residential areas, the presence of structures, vegetation, and topography limit views of the power plant for many of these residents. However, unobstructed views of MBPP are available to boats on Morro and Estero Bays.

The viewshed for the proposed project would be less than that indicated for the existing power plant in **VISUAL RESOURCES Figure 6** since the stacks of the proposed project would be less visible due to their substantially lower 145-foot height. However, it is pertinent to identify the broader viewshed since removal of the existing stacks as part of the proposed project would have a noticeable effect on much of this area. Project visibility would be attenuated with increasing distance, particularly at times of the year when conditions of poor visibility persist either from haze or fog. Vapor plumes from the project, which would extend above the tallest project structures, could be seen from greater distances than the power plant structures, particularly on clear days that coincide with favorable meteorological conditions for plume formation (low temperature and high humidity).

IMMEDIATE POWER PLANT VICINITY

The MBPP would be located in a complex landscape consisting of a mosaic of industrial, residential, commercial, and natural features. The proposed project would be located within the boundaries of the existing Morro Bay Power Plant property on a site that is presently occupied by the tank farm, approximately 600 feet northeast of the existing stacks. The existing site is industrial in appearance and includes six 32-foot high tanks (five 150,000-barrel (bbl) capacity fuel oil storage tanks and one 35,000-bbl capacity displacement oil tank). The adjacent three 405-foot tall stacks (42 feet in diameter at the base, tapering to 17.5 feet in diameter at the top) and 150-foot tall, 500-foot long steam turbine generator complex dominate the immediate landscape.

Immediately west of the project site are coastal sand dunes, Coleman Park, the southern end of Morro Strand State Beach, and Morro Rock Natural Preserve. North of the site is Morro Creek, Morro Dunes Trailer Park Resort Campground, the City of Morro Bay Maintenance Yard and Wastewater Treatment Plant, the Hanson Morro Bay Concrete Plant, Lila Kaiser Park, a Motel 6, an indoor roller rink, and Morro Bay High School. To the east of the site is Highway 1, a state designated scenic highway, and residential development along the hill slopes to the east. To the south of the project site is residential development; the City of Morro Bay central, the Embarcadero, and harbor areas; Morro Bay; and the sand spit comprising the Morro Dunes Natural Preserve.

While views of the site are available from all directions, immediate foreground views tend to be somewhat confined and are typically dominated by the geometric forms of the existing power plant with its three 405-foot tall stacks, tank farm and complex linear features of the switchyard. More distant views are generally panoramic in scope, capturing broad vistas of ocean, bay, coastal hills, and shoreline development. These views can capture scenes of great variety and vivid colors, often from elevated and/or unobstructed viewing perspectives. The availability of views to the site from residential areas is greatly dependent on the presence or absence of intervening vegetation and structural screening.

From the west, close-in views of the site are available from Embarcadero Road, Coleman Drive, Coleman Park, the Morro Rock parking areas, and the south end of Morro Strand State Beach. These views tend to be dominated by the existing stacks though the harbor entrance to Morro Bay and the City's structures (particularly along the Embarcadero) appear as prominent foreground to middleground landscape features depending on viewing location. The coastal hills east of the site are apparent background rolling landforms with curvilinear ridgelines that exhibit primarily a natural character except on the lower western slopes where residential development occurs and utility structures are prominent.

From the north, most foreground views of the site are at least partially screened by existing development and vegetation. From these views, the existing stacks are the dominant visual features. More distant views from the north encompass a broader landscape that is dominated by foreground coastal developed and natural features as well as the distinctly rounded yet irregular landform of Morro Rock.

From the east, with the exception of intermittent background views available along Highways 1 and 41, the topography of the coastal hills tends to limit most views of the site to foreground and middleground viewing perspectives. The most prominent features from these views are Morro Rock, the existing stacks, and, depending on viewing location, the numerous transmission lines that descend from the coastal hills to connect to the Morro Bay Power Plant. The more elevated perspectives from the hillside residential areas also afford panoramic vistas of the ocean and Morro Bay as well as the more distant hills and ridgelines to the north and south that define Estero Bay.

From the south, foreground views of the site are available from nearby residences and the Embarcadero/harbor area though many views are partially screened by vegetation and/or structures. The landscape is typically dominated by complex structural forms with a variety of coloration and, from certain viewpoints, the prominent rounded form of Morro Rock. More distant views from the south are available from the shoreline of Morro Bay and Morro Dunes Natural Preserve. From these viewing opportunities, the most prominent landscape features include the blue-green expanse of Bay waters, the existing power plant stacks, and the trees and geometric structural forms of the City of Morro Bay commercial areas, residential neighborhoods, and harbor facilities.

TRANSMISSION LINE STRUCTURES, WATER INTAKE BUILDING, AND ONSITE LAYDOWN AREAS

The proposed takeoff and transmission line structures, water intake building, and onsite laydown areas are within the power plant vicinity described above.

OFFSITE PROJECT MARSHALLING AREAS

The Applicant has proposed to locate two offsite marshalling areas south of the project site and outside the City of Morro Bay, adjacent to Highway 1, which is a state-designated scenic highway. Leases are being pursued for a 10-acre site near a rail siding for temporary holding of large HRSG components and a 20-acre site for a marshalling area. The 20-acre marshalling area would be the Applicant's preferred delivery site for most large truck deliveries (DUKE 2000a, p. 2-63). However, the precise location of the marshalling areas has not been identified.

KEY OBSERVATION POINTS

As discussed above, staff selected seven of the 20 Key Observation Points (KOPs) evaluated in the AFC for a more in-depth analysis of the visual setting and visual impact issues of concern. The seven key viewing areas selected for analysis were KOPs 5, 6, 8, 14, 15, 19, and 20. Those seven locations are discussed in detail below. A Visual Analysis Data Summary is provided for each of the seven selected KOPs in VISUAL RESOURCES Appendix A and their existing conditions photographs and photosimulations are presented in VISUAL RESOURCES Appendix B. The views from the remaining 13 KOPs are summarized in a subsequent section of this analysis entitled *"Additional Viewpoints."* Existing photographs and visual simulations from the 13 additional viewpoints are presented in Appendix C. **VISUAL RESOURCES Figure 7** shows the location of all 20 KOPs.

KOP 5 – MORRO STRAND STATE BEACH

KOP 5 represents the view to the southeast from Morro Strand State Beach toward the project site (**VISUAL RESOURCES Figure 8A**). The viewpoint is located on the beach, directly across from the intersection with Atascadero Road.

VISUAL QUALITY

The view from KOP 5 is dominated by the foreground beach and coastal waters, sand dunes, and Morro Rock, as well as the existing power plant in the middleground. With the exception of the power plant and transmission line structures descending the coastal hills to the west of the plant, the landscape is predominantly natural in appearance. The low rolling coastal hills form the distant horizon to the east and south with the Pacific Ocean bordering on the west. The distinctive rounded form of Morro Rock rising abruptly from the surf adds visual variety and interest and provides a dramatic contrast to the broad, horizontal forms of beach and water. However, the prominence of the existing power plant with industrial visual character lessens visual quality, which is moderate-to-high.

VIEWER CONCERN

While beach users generally anticipate panoramic views of a predominantly natural landscape of ocean surf, sand, and low growing dune vegetation, viewer expectations are somewhat tempered by the presence of the existing power plant. Earthen sand colors provide a contrast to the blue-green ocean waters, while textures are matte and rough-hewn. The existing power plant is a prominent feature in the viewshed but its colors and texture are compatible with the overall natural character of the landscape. Viewers would perceive any additional intrusion of industrial character as a negative contribution to the beach viewing experience and viewer concern is high in this view area.

VIEWER EXPOSURE

The viewing distance to the project site is approximately 2,300 feet. Views from the beach toward the proposed power plant site are direct (frontal) when walking south on the beach. For the purposes of this report, a view is considered direct or “frontal” if the angle of view is within 45° left or right of the primary view direction (typically the direction of travel for motorists or pedestrians. A view is considered indirect or “peripheral” if the angle of view is greater than 45° off the primary view direction. Site visibility is high because foreground to background views of the site are unobstructed. The number of viewers is moderate along the beach and the duration of views can be extended for people walking south on the beach. Therefore, viewer exposure is moderate-to-high.

OVERALL VISUAL SENSITIVITY

The moderate-to-high visual quality, high viewer concern, and moderate-to-high viewer exposure all contribute to an overall moderate-to-high rating for visual sensitivity, a rating that would have been higher without the partially offsetting structural context of the existing power plant. The presence of the existing power plant provides visual characteristics that enable the existing landscape to absorb a

moderate degree of additional structural influence before resulting in a substantial visual impact.

KOP 6 – Morro Dunes Trailer Park Resort Campground

KOP 6 represents the view to the southeast toward the project site from the Morro Dunes Trailer Park Resort Campground (**VISUAL RESOURCES Figure 9A**). The most prominent features in the views from KOP 6 are the recreational vehicles within the trailer park and the existing power plant with its three 405-foot tall stacks.

Visual Quality

The southeasterly view encompasses a mosaic of features including the geometric rectangular structures of vehicles, storage containers, and powerplant facilities; the linear power plant stacks with prominent vertical lines; and the irregular forms of intervening vegetation between the trailer park and project site. With the exception of the power plant facilities, the other landscape features contribute to a recognizable coastal recreation landscape that provides contrast to a prominent blue sky. The prominence of the existing power plant lessens visual quality, which is low-to-moderate.

Viewer Concern

Users of the trailer park generally anticipate a coastal landscape in the immediate vicinity of the trailer park with limited industrial intrusion. Although the existing power plant is the dominant feature in the viewshed, its colors and texture are generally compatible with the overall coastal character of the general landscape. Viewers would perceive any additional intrusion of industrial character as a negative contribution to the coastal recreation experience and viewer concern is high.

Viewer Exposure

The viewing distance to the project site is approximately 1,000 feet. Views to the southeast toward the project site are partially screened by intervening vegetation. Although some ground-level screening would limit views of the lower portion of the project, site visibility is still considered high due to the project's foreground position in the viewshed and the unobstructed views of the upper portions of the project that would be available. The number of viewers is low-to-moderate though the duration of views is extended. Therefore, viewer exposure is moderate-to-high.

Overall Visual Sensitivity

The high viewer concern and moderate-to-high viewer exposure are partially countered by the low-to-moderate visual quality of the landscape, which is strongly influenced by the presence of the existing power plant. The resulting overall visual sensitivity is moderate.

KOP 8 – Morro Rock

KOP 8 represents the view to the northeast toward the project site from Morro Rock (**VISUAL RESOURCES Figure 10A**). The viewpoint is located on Coleman Drive. The most prominent features in the viewshed of KOP 8 are the blue-green waters of

Morro Bay harbor in the foreground, the existing power plant in the middleground, and the coastal hills in the background.

VISUAL QUALITY

The northeasterly view from KOP 8 includes the foreground expanse of the harbor waters; the geometric forms of parked vehicles along Coleman Drive, the existing power plant with its prominent vertical stacks, the numerous vertical transmission line structures that descend the coastal hills to the existing power plant switchyard, and the mosaic of buildings within the City of Morro Bay, all backdropped by the low rolling landforms of the coastal hills with horizontal to curvilinear lines. All of these features contribute to the visual variety of the coastal landscape. The prominence of the existing power plant and motor vehicles (when parked along Coleman Drive) somewhat lessens the visual quality of this coastal scene, which is moderate-to-high.

VIEWER CONCERN

Viewers from Morro Rock and Coleman Drive generally anticipate a broad panoramic view of Morro Bay and the sand spit backdropped by the City of Morro Bay and the coastal hills. The presence of the existing power plant affects viewer expectations as it figures prominently in most views in and around the harbor area. Thus, residents and viewers alike do not anticipate a landscape lacking prominent industrial features. However, the light colors and rough texture of the power plant are generally compatible with the overall coastal character of the general landscape. Viewers would perceive any additional intrusion of industrial character as a negative contribution to the coastal community landscape and viewer concern is high.

VIEWER EXPOSURE

The viewing distance to the project site is approximately 2,600 feet. Site visibility is high because all portions of the site are fully exposed to viewers along Coleman Drive, allowing for unobstructed and direct foreground views. The number of viewers at this location is moderate-to-high due to the rock's importance as a visitor destination, and the duration of views is moderate-to-extended. Therefore, viewer exposure is moderate-to-high.

OVERALL VISUAL SENSITIVITY

The moderate-to-high visual quality, high viewer concern, and moderate-to-high viewer exposure all contribute to a moderate-to-high rating for overall visual sensitivity of the existing view.

KOP 14 – SUNSET PLATEAU

KOP 14 represents the view to the south-southwest from the Sunset Plateau residential area (**VISUAL RESOURCES Figure 11A**). The viewpoint is located at a vacant residential lot at the end of Sunset Court.

VISUAL QUALITY

KOP 14 provides an elevated, panoramic vista view of the north Morro Bay area encompassing a variety of landscape elements including such foreground urban features as Main Street, Highway 1, and the Motel 6 on Atascadero Road. Morro Rock and the existing power plant are the most prominent middleground elements, rising vertically above all foreground visual features. The hills and ridgelines that define the southern extent of Estero Bay provide a low horizontal background along with the blue waters of the Pacific Ocean. The prominent geometric rectangular and linear forms of the existing power plant stand in contrast to the natural, rounded form of Morro Rock, while the substantial influence of urban and built features reduces the visual quality of the coastal landscape which is moderate.

VIEWER CONCERN

Viewers from the residential area on Sunset Plateau generally anticipate a broad panoramic view of the Morro Bay coastal landscape including Morro Rock, Morro Bay, the harbor area, and the sand spit backdropped by the southern ridgelines and Pacific Ocean. Although the existing power plant is a prominent feature in the landscape and viewers expect to see the plant's industrial features in the view, residents and other viewers would be highly sensitive to any encroachment of industrial features upon Morro Rock and would perceive any such intrusion as a negative contribution to the coastal community landscape. Therefore, viewer concern is high.

VIEWER EXPOSURE

The viewing distance to the site is approximately 2,900 feet. Project site visibility is high due to the elevated perspective available in the view area and the generally unobstructed middleground views. Some residences are oriented to the northwest away from the site but still have oblique views of the site. While the number of residential viewers is low, the view duration is extended. The resulting viewer exposure is moderate.

OVERALL VISUAL SENSITIVITY

From the view area represented by KOP 14, the moderate visual quality, high viewer concern, and moderate viewer exposure contribute to a moderate-to-high rating for overall visual sensitivity of the existing viewshed which is substantially influenced by the presence of the existing power plant and foreground urban features.

KOP 15 – HARBOR FRONT TRACT

KOP 15 represents the view to the west from the Harbor Front Tract residential area (**VISUAL RESOURCES Figure 12A**). The viewpoint is located at the intersection of Radcliff Street and Berwick Drive.

VISUAL QUALITY

KOP 15 provides an elevated, panoramic vista view of the north Morro Bay area encompassing a variety of landscape elements including such foreground urban features as Main Street, Highway 1, and residences in the Harbor Front Tract

residential area. The most prominent features in the landscape include the existing power plant, Morro Rock (which is partially obscured by the existing plant), and the transmission lines descending the coastal hills to the PG&E switchyard at the existing plant. The Pacific Ocean provides a low profile, horizontal backdrop. The substantial influence of urban features and energy infrastructure reduces visual quality to a low-to-moderate level.

VIEWER CONCERN

Viewers from the Harbor Front Tract residential area generally anticipate a broad panoramic view of the Morro Bay coastal landscape dominated by foreground residential development and the existing power plant and Morro Rock, all of which are backdropped by the Pacific Ocean. The existing transmission line corridor is also a prominent feature that contributes to overall viewer expectations of a landscape that is highly influenced by the complex industrial character of existing energy infrastructure. However, these industrial influences would not reduce viewer sensitivity to additional industrial intrusion into the viewshed that includes Morro Rock. Therefore, viewer concern is high.

VIEWER EXPOSURE

The viewing distance to the site is approximately 2,900 feet. Site visibility is high due to the elevated perspective at KOP 15 and the availability of relatively unobstructed middleground views. However, the existing transmission lines descending the coastal hills cross in front of the site. While the number of residential viewers is low, the view duration is extended. The resulting viewer exposure is moderate.

OVERALL VISUAL SENSITIVITY

From the view area represented by KOP 15, the low-to-moderate visual quality and moderate viewer exposure somewhat counter the high viewer concern, resulting in a moderate rating for overall visual sensitivity.

KOP 19 – EMBARCADERO COMMERCIAL DISTRICT

KOP 19 represents the view to the northwest from the Embarcadero Commercial District (**VISUAL RESOURCES Figure 13A**). The viewpoint is located on the steps above the giant chessboard at Centennial Park.

VISUAL QUALITY

KOP 19 provides a somewhat elevated view over a portion of the Embarcadero commercial district. Although some natural features are visible, the landscape is predominantly developed and consists of a complex of geometric structural forms, many retaining the coastal fishing village character more reminiscent of a passing era. The rounded form of Morro Rock is a prominent though partially obscured background feature along with the existing power plant. Visual quality is moderate.

VIEWER CONCERN

The Embarcadero commercial area and harbor docks are at the center of the commercial and sport fishing industry and tourism within the City of Morro Bay.

Visitors and residents alike frequent the area's shops, services, and restaurants. Viewers generally expect to experience the charm of a coastal fishing village community with minimal industrial intrusion. Although the prominence of the existing plant does temper viewer expectations, most viewers would regard additional or more prominent industrial features as a negative contribution to the area's visual character, detracting from the more scenic aspects of local views. Therefore, viewer concern is high.

VIEWER EXPOSURE

The viewing distance to the site is approximately 3,300 feet and views to the site are partially screened by intervening structures along The Embarcadero. Visibility is low due to the site's more northerly middleground location relative to the commercial area and the partial screening by commercial structures. Although the number of viewers is high, the view durations vary from brief to extended depending on vantage point, the presence or absence of intervening structures, and whether the viewer is walking or driving. The resulting viewer exposure is low-to-moderate.

OVERALL VISUAL SENSITIVITY

From the view area represented by KOP 19, the moderate visual quality and low-to-moderate viewer exposure somewhat counter the high viewer concern, resulting in a moderate rating for overall visual sensitivity.

KOP 20 – HIGHWAY 1

KOP 20 represents the view to the west-southwest from southbound Highway 1's Main Street onramp (**VISUAL RESOURCES Figure 14A**). This viewpoint was selected to evaluate the potential visual impact of the proposed project on Highway 1, which is a state-designated scenic highway.

VISUAL QUALITY

The view from KOP 20 encompasses a complex landscape of energy and transportation infrastructure, roadside vegetation, and the partially obscured, rounded form of Morro Rock. Although some natural features are visible, the landscape is substantially influenced by industrial characteristics of the power plant, transmission lines that span the highway, and the adjacent switchyard. These features lessen visual quality, which is low.

VIEWER CONCERN

Highway 1 is a state-designated Scenic Highway and motorists on a designated scenic highway are typically considered to be highly sensitive to landscape changes. However, in this case motorists on the highway either anticipate a substantial presence of energy infrastructure as a result of their familiarity with the area or visually encounter the existing power plant and transmission lines from a substantial distance upon their approach to this location. Therefore, the substantial presence of the existing infrastructure tempers viewer expectations and viewer concern is moderate.

VIEWER EXPOSURE

The viewing distance to the site is approximately 1,600 feet. Visibility of the foreground project site to travelers along this portion of Highway 1 is low because of the indirect angle of view away from the primary directions of travel and the partial screening provided by roadside vegetation, signage, and the existing transmission structures. Although the number of potential viewers is high, the view duration is brief due to the high travel speeds. The foreground viewing proximity is more than offset by the low site visibility and the brief duration of view, resulting in a low degree of viewer exposure.

OVERALL VISUAL SENSITIVITY

From the view area represented by KOP 20, the low visual quality and low viewer exposure partially offset the moderate viewer concern, resulting in low-to-moderate overall visual sensitivity.

ADDITIONAL VIEW AREAS

This section provides brief descriptions of the existing views from each of 13 additional view areas. As previously indicated, visibility of the existing and proposed project from these 13 view areas is generally limited either by distance or screening from vegetation or structures. Photographs of the existing view from each of the 13 representative viewpoints are provided in VISUAL RESOURCES Appendix C.

KOP 1 – BLACK MOUNTAIN

This viewpoint is located at the top of Black Mountain, looking west-northwest at a distance of approximately 1.8 miles (Visual Resources Appendix C, Figure C-1). The view encompasses the City of Morro Bay and Morro Bay in the middleground backdropped by Morro Rock and the Pacific Ocean. Though the existing stacks are prominent vertical features in the landscape, the project site is barely noticeable at this distance.

KOP 2 – MORRO STRAND STATE BEACH CAMPGROUND ENTRANCE

This viewpoint is located at the entrance to Morro Strand State Beach Campground, looking south-southeast at a distance of approximately 2.08 miles and is representative of the views experienced by local residents and tourists visiting the campground (Visual Resources Appendix C, Figure C-2). The view is also representative of that experienced by residents, pedestrian, and motorists along North Beachcomber Drive. Panoramic views from this point encompass the ocean, beach, sand dunes, and Morro Rock in the distance. The existing power plant stacks are visible though not prominent at this viewing distance. The proposed project site is barely noticeable at this distance.

KOP 3 – HIGHWAY 1 AT SAN JACINTO STREET

This viewpoint is located on the west side of Highway 1 at the San Jacinto Street crossing, looking south at a distance of approximately 1.32 miles and is representative of the southbound views on Highway 1 (Visual Resources Appendix C, Figure C-3). Panoramic views from this point encompass roadside residential

and commercial development, the new Cloisters residential development, and Morro Rock. Although the existing stacks are prominent vertical features in the landscape, the project site is partially screened by vegetation and structures and is minimally noticeable at this distance.

KOP 4 – THE CLOISTERS

This viewpoint is located at The Cloisters Tract Public Park, looking south at a distance of approximately 0.93 mile and is representative of the views available to park users and residents of the developing community (Visual Resources Appendix C, Figure C-4). Panoramic views from this point encompass nearby residences, vegetation surrounding the High School, and Morro Rock. Although the existing stacks are prominent vertical features in the landscape, the project site is partially screened by vegetation. Additional development at The Cloisters has occurred since this photograph was taken and now views of the project site from this location are completely screened by new residential structures.

KOP 7 – MORRO CREEK AT EMBARCADERO ROAD

This viewpoint is located just south of Morro Creek at Embarcadero Road, looking east-southeast at a distance of approximately 1,000 feet and is representative of immediate foreground views from the west and northwest (Visual Resources Appendix C, Figure C-5). The unobstructed view of the project site from this location encompasses the existing power plant and tank farm, a portion of the sand dunes west of the site, an existing storage structure, and a portion of the RV campground to the north of the site. The coastal hills provide a backdrop of low, rolling landforms with curvilinear ridgelines. The existing stacks and tank farm are the dominant landscape elements from this viewpoint.

KOP 9 – NORTH T PIER

This viewpoint is located on the north T Pier, looking north-northeast at a distance of approximately 1,100 feet and is representative of immediate foreground views from the Embarcadero/harbor area (Visual Resources Appendix C, Figure C-6). The view of the project site from this location encompasses the existing power plant, intake structure, harbor facilities, and commercial businesses along The Embarcadero. Although the existing power plant and stacks are the dominant landscape elements in this view, the proposed project site is substantially screened from view by structures and vegetation.

KOP 10 – SCOTT STREET

This viewpoint is located at 1278 Scott Street, looking northwest at a distance of approximately 1,900 feet and is representative of residential and pedestrian views along Scott Street (Visual Resources Appendix C, Figure C-7). The view of the project site from this location encompasses the existing power plant, onsite vegetation, and Morro Rock. Although the existing power plant and stacks are a dominant landscape feature (along with Morro Rock) in this view, the proposed project site is substantially screened from view by vegetation.

KOP 11 – HIGHWAY 41 AT 1-MILE DISTANCE

This viewpoint is located on westbound (southbound) Highway 41, looking southwest at a distance of approximately 1.04 miles and is representative of the available westbound views on Highway 41 (Visual Resources Appendix C, Figure C-8). The view of the project site from this location is framed by the coastal hills and encompasses foreground agricultural uses with prominent middleground features including the coastal hills, the Morro Bay Power Plant and stacks, and Morro Rock. While views are typically focussed in the direction of the project site, both the existing power plant and proposed project site are partially screened by topography and vegetation.

KOP 12 – HIGHWAY 41 AT 0.75-MILE DISTANCE

This viewpoint is located on westbound Highway 41, in the center turn lane at the Miners Hardware entrance, looking southwest at a distance of approximately 3,900 feet. This view is representative of foreground views from westbound Highway 41 and local views in the general vicinity of Highway 41 and Main Street (Visual Resources Appendix C, Figure C-9). The view of the project site from this location encompasses roadside commercial and storage uses and residential development (to the north). In addition to existing structures and road surface in the immediate foreground, the existing power plant stacks and Morro Rock are the dominant landscape features. Views from this general location are constrained by structures and vegetation. From this viewing perspective, the proposed project site is partially screened by structures and vegetation.

KOP 13 – MORRO DEL MAR SUBDIVISION

This viewpoint is located in the Morro Del Mar Subdivision near the intersection of Nutmeg and Casitas Avenues. The view is to the south-southwest at a distance of approximately 1.08 miles and is representative of unobstructed, hillside residential views from the subdivision (Visual Resources Appendix C, Figure C-10). This elevated perspective provides sweeping, panoramic views that encompass the coastal area of Estero Bay including Morro Bay, the sand spit and harbor entrance, Morro Rock, and urban development in the northern portion of the City of Morro Bay. Foreground residential development and the prominent middleground features of the existing power plant stacks and Morro Rock dominate views from this location. Although the existing stacks are prominent vertical forms in the landscape, the proposed power plant would not be prominent at this viewing distance.

KOP 16 – MORRO BAY BOULEVARD EXIT FROM HIGHWAY 1

This viewpoint is located at the Morro Bay Boulevard overcrossing of Highway 1, looking west-northwest at a distance of approximately 1.16 miles and is representative of pedestrian and motorist views (Visual Resources Appendix C, Figure C-11). The view of the project site from this location encompasses foreground commercial structures and paved roads, roadside landscaping, the lower slopes of the coastal hills, with Morro Rock and the existing stacks in the background. The existing stacks are prominent middleground landscape features in spite of their partial screening by structures and vegetation. However, the proposed project site is almost entirely screened from view by structures and vegetation.

KOP 17 – MORRO HEIGHTS NEIGHBORHOOD

This viewpoint is located in the Morro Heights neighborhood, at the intersection of Piney Way and Olive Street. The view is to the west-northwest at a distance of approximately 1.17 miles and is representative of the available residential views from this neighborhood (Visual Resources Appendix C, Figure C-12). Immediate foreground structures and vegetation generally obscure views of the site from this neighborhood. However, some residences are afforded panoramic views over downtown Morro Bay to the project site and coastal area beyond. Where visible from this neighborhood, the existing stacks are prominent vertical features in the distant middleground landscape. At this viewing distance, the proposed power plant would be substantially less prominent than the existing power plant and would be partially screened by vegetation and structures.

KOP 18 – TIDELANDS PARK

This viewpoint is located on the public dock at Tidelands Park, looking north-northwest at a distance of approximately 1.02 miles and is representative of shoreline views from the City's southern bayfront (Visual Resources Appendix C, Figure C-13). The view from this location is dominated by the foreground expanse of Morro Bay, the sand spit, shoreline development, and Morro Rock. Boats at anchor in the Bay add variety and interest to the landscape and the existing powerplant and stacks are prominent middleground features. From this vantage point, the proposed site appears minimally noticeable as a background feature as a result of viewing distance and partial screening by structures and vegetation.

IMPACTS

CONSTRUCTION IMPACTS

Project construction would include demolition of the tank farm, power block construction, project commissioning, demolition of the existing plant, and renovation of the water intake building. Project construction would also require activities and storage of equipment and materials at the construction marshalling areas. These activities would cause temporary visual impacts due to the presence of equipment, materials, and workforce. Construction would involve the use of heavy equipment including vehicles and tall cranes for construction and demolition as well as temporary storage and office facilities. The Applicant has been unable to identify the number of cranes necessary for construction and demolition. Therefore it must be assumed that multiple cranes would be utilized concurrently at the construction and demolition sites. The Applicant has also been unable to identify the heights of the cranes. It must also be assumed that a number of the cranes would be of substantial height, particularly with regard to demolition of the three 405-foot stacks, the 140-foot tall turbine complex, and the storage tanks.

Based on a review of the project schedule provided as Figure 2-11 in the AFC (DUKE 2000a), it is clear that the sequence of construction and demolition would result in views of substantial construction and demolition activities and equipment over a period of approximately five years. During this time, a significant portion of

the new plant and existing plant would be concurrently visible along with the necessary construction cranes, vehicles, and equipment. During this period, a substantially adverse visual impact would occur (increased structural contrast, project dominance, and view blockage of Morro Rock), particularly as experienced from the elevated perspectives of the Sunset Plateau and Harbor Front Tract residential areas (see **Visual Resources Figures 11B** and **12B**). However, given the long-term visual improvement that would occur with removal of the existing power plant, these interim construction impacts are not considered significant.

The Applicant has also proposed to locate two offsite marshalling areas south of the project site and outside the City of Morro Bay, adjacent to Highway 1. Leases are being pursued for a 10-acre site near a rail siding for temporary holding of large HRSG components and a 20-acre site for a marshalling area. The marshalling area would be the Applicant's preferred delivery site for most large truck deliveries (DUKE 2000a, p. 2-63).

The precise location of the marshalling areas has not been identified beyond the statement above that they would be located adjacent to Highway 1, which is a state designated scenic highway. Absent specific locational information, the significance of any resulting visual impacts cannot yet be determined. However, if the marshalling areas are prominent in the views from Highway 1, significant visual impacts may result.

OPERATION IMPACTS

The analysis of operation impacts is presented below for each Key Observation Point (KOP) summarized in the Visual Analysis Summary table provided in Appendix A. For each KOP, an evaluation of visual contrast, project dominance, and view blockage is provided with a concluding assessment of overall visual change and significance of any resulting visual impact. A brief assessment of the visual change that would be perceived from additional view areas is also provided in a subsequent section of this analysis.

KEY OBSERVATION POINT 5 – MORRO STRAND STATE BEACH

VISUAL RESOURCES Figure 8B (see Appendix B) presents a photosimulation of the proposed project as viewed from KOP 5. The most obvious change to the landscape is the replacement of an existing power plant that exhibits prominent vertical elements with a new power plant exhibiting more prominent horizontal elements. The new facilities would be located closer to KOP 5 than the existing power plant that is being replaced. As a result, the apparent scale of the new plant would be similar to that of the existing plant. However, the new power plant has a much stronger industrial character as a result of a more visible structural complexity with highly metallic coloration and texture, resulting in a greater noticeability of the proposed facilities when compared to the existing structures.

VISUAL CONTRAST

Although the KOP 5 viewshed encompasses an existing power plant with prominent geometric forms and lines, the proposed site is very exposed to viewers along Morro Strand State Beach and offers minimal screening potential for the proposed

project. As a result, the site's ability to support additional industrial structures (visual absorption capability) is low-to-moderate. While the proposed project would eliminate the prominent linear forms of the existing stacks with their strong vertical lines, it would also introduce the highly visible linear, horizontal form of the sound wall, the horizontal lines associated with the transmission line, and the very complex forms and lines of the power plant facilities including pipe racks. The introduced forms and lines would be substantially different than the forms and lines already present in the landscape. Also, the plant facilities and sound wall are of a highly metallic appearance, both in terms of color and texture. Again, these characteristics are very dissimilar to the lighter, earth-tone colors and rough-hewn and granular textures that are characteristic of the existing coastal landscape. As presented in the Visual Analysis Summary table (see Appendix A), a high degree of visual contrast would be perceived from KOP 5 with implementation of the proposed project. This represents an increase in visual contrast over the moderate visual contrast associated with the existing power plant.

PROJECT DOMINANCE

Although the existing power plant stacks are significantly taller than the replacement facilities, a much greater horizontal extent of the proposed project is visible as a foreground landscape feature. Due to the closer proximity of the proposed project relative to the viewer at KOP 5 and Morro Strand State Beach, the proposed project appears to be of similar scale and greater mass when compared to the existing power plant (a middleground feature). As a result, the proposed project's prominence is similar to that of the existing plant to be replaced. When compared to the other prominent foreground features in the landscape including the broad expanses of beach and ocean and the prominent rounded form of Morro Rock, the proposed project would appear co-dominant, which is a similar outcome compared to the co-dominance associated with the existing power plant.

VIEW BLOCKAGE

From Key Observation Point 5, the proposed project (lower quality features) would result in an increase in the blockage of sky, coastal hills, and vegetation (higher quality features) when compared to what is currently blocked by the existing power plant. In particular, much of the coastal hills appearing low on the horizon would be blocked by the power plant and transmission line as shown in **VISUAL RESOURCES FIGURE 8B**. However, the background landscape elements that would be blocked from view by the proposed project are similar to those elements presently blocked from view by the existing plant. Also, the background features that would be blocked are not prominent in the viewshed. View blockage would be moderate. This represents a slight increase from the low-to-moderate view blockage that presently occurs with the existing power plant.

OVERALL VISUAL CHANGE

From KOP 5, the overall visual change that the proposed project would cause, would be adverse primarily due to the high degree of visual contrast that would result from the project as a co-dominant foreground visual element. As part of the proposed project, the Applicant has included a conceptual landscaping plan that would help to screen the project from view. **VISUAL RESOURCES Figure 8C**

presents a photosimulation from KOP 5 showing the proposed landscaping at five years of maturity. The simulation clearly shows that the proposed landscaping would provide no meaningful screening of the project within the first five years following construction. **VISUAL RESOURCES Figure 8D** shows the landscaping at full maturity at 20 years. Although the trees at full height are effective in breaking up structural massing, gaps in the foliage and canopy still allow views of the complex, industrial forms of the project facilities.

VISUAL IMPACT SIGNIFICANCE

When considered within the context of the moderate-to-high visual sensitivity of the existing landscape and viewing characteristics, the adverse visual change that would be perceived from KOP 5 would result in an adverse and significant visual impact. Although the Applicant has proposed a landscaping plan, which would partially screen the project facilities from view, the screening is not adequately effective and the extended 20-year time frame to maturity is not acceptable. Under the proposed landscaping plan, the resulting screening would not adequately mitigate the significant visual impact that would occur at KOP 5 and a significant visual impact would remain. Therefore, staff has proposed additional mitigation measures VIS-1 and VIS-2 to reduce structural contrast and improve the effectiveness of the landscaping plan. When mitigation measures VIS-1 and VIS-2 are applied as discussed in the subsequent section entitled *Mitigation*, the final visual impact would be adverse but not significant.

KOP 6 – MORRO DUNES TRAILER PARK AND RESORT CAMPGROUND

VISUAL RESOURCES Figure 9B presents a photosimulation of the proposed project as viewed from KOP 6. The most obvious change to the landscape is the replacement of the existing power plant with a new power plant. The new facilities would be located closer to KOP 6 than the existing power plant that is being replaced. As a result, the apparent scale of the new plant would be larger than that of the existing plant. Additionally, the new power plant has a much stronger industrial character as a result of a more visible structural complexity with highly metallic coloration and texture, resulting in a greater noticeability of the proposed facilities when compared to the existing structures. It should be noted that the simulation presented in Figure 9B does not include the transmission line and takeoff structures as shown in Figure 8B. However, in the Figure 9B image, these structures would be only minimally visible at the far left of the image. The absence of these structures in this image does not substantially compromise the accuracy of the simulation.

VISUAL CONTRAST

Similar to KOP 5, the views from KOP 6 encompasses the existing power plant with its prominent geometric forms and lines. However, the proposed project site is located close to KOP 6 and would be very visible to the trailer park residents and visitors. As a result, the landscape's ability to absorb foreground industrial structures without causing visual impacts (visual absorption capability) is low-to-moderate. While the proposed project would eliminate the prominent linear forms of the existing stacks with their strong vertical lines, it would also introduce the highly visible complex forms and lines of the power plant facilities. The introduced forms

and lines would be substantially different than the forms and lines already present in the landscape. Also, the color of the plant facilities and texture of the metallic surfaces are very dissimilar to the lighter, earth-tone colors and rough-hewn, granular textures that are characteristic of the existing landscape. Therefore, the proposed project would result in a high degree of visual contrast when viewed from KOP 6. This represents an increase in visual contrast over the moderate visual contrast associated with the existing power plant.

PROJECT DOMINANCE

Although the existing power plant stacks are significantly taller than the replacement facilities, the proposed project's foreground proximity to the viewer at KOP 6 creates the impression that the proposed project is of similar scale, greater mass, and greater horizontal extent compared to the existing power plant. As a result, the proposed project appears as the dominant feature in the landscape when compared to the other prominent foreground features including the trailer park facilities and vehicles and nearby vegetation. This represents an increase from the co-dominance associated with the existing power plant.

VIEW BLOCKAGE

From Key Observation Point 6, the proposed project (lower quality features) would cause a substantial increase in the blockage of sky (higher quality feature) when compared to the amount of sky that is currently blocked by the existing power plant. The overall extent of the blockage as viewed from KOP 6 is moderate-to-high. This represents a slight increase from the moderate view blockage that presently occurs at this location with the existing power plant.

OVERALL VISUAL CHANGE

From KOP 6, the overall visual change that the proposed project would cause would be adverse and is primarily due to the high degree of visual contrast and moderate degree of view blockage that would result from the project as a dominant foreground visual element. Figure 9B includes the Applicant's proposed landscaping at full maturity. However, given the distance of the trees from the trailer park viewers, they do not effectively screen the proposed power plant facilities from views within the trailer park.

VISUAL IMPACT SIGNIFICANCE

When considered within the context of the moderate visual sensitivity of the existing landscape and viewing characteristics, the adverse visual change that would be perceived from KOP 6 would result in an adverse and significant visual impact. Although the Applicant has proposed a landscaping plan, which would partially screen the project facilities from view, the screening is not adequately effective and the extended 20-year time frame to maturity is not acceptable. Therefore, staff has proposed additional mitigation measures in Conditions VIS-1 and VIS-2 to reduce structural contrast and improve the effectiveness of the landscaping plan. With these mitigation measures applied as discussed in the subsequent section entitled *Mitigation*, the final visual impact would be adverse but not significant.

KOP 8 – MORRO ROCK

VISUAL RESOURCES Figure 10B presents a photosimulation of the proposed project as viewed from KOP 8. Visitors at Morro Rock and in the parking lot on Morro Rock have views of the harbor area and city that include the existing power plant. With the proposed project, viewers would not see a power plant from the Morro Rock parking lot though it would be visible upon returning along Coleman Road as shown in Figure 10B. The cars shown in the photograph are parked along the harbor entrance and not at the Morro Rock parking lot which is behind (to the west of) the viewpoint used for Figure 10B. With the exception of the water intake building located along Embarcadero, the new facilities would be located farther to the north of the existing plant's location. With the proposed structural design treatment, the intake building would appear taller than present but with an architectural treatment that would be more in keeping with the fishing village charm of the Embarcadero commercial area.

VISUAL CONTRAST

The viewshed of KOP 8 encompasses the existing power plant with its prominent geometric forms and lines, the harbor area and sand spit of Morro Bay, much of the City of Morro Bay, and the coastal hills to the east. The landscape's ability to absorb the new foreground industrial structures without resulting in visual impacts (visual absorption capability) is moderate as a result of the structural context that has been established by the existing plant. While the proposed project would eliminate the prominent linear forms of the existing stacks with their strong vertical lines, it would also introduce the more complex forms and lines of the new power plant facilities. However, at this viewing distance, the new structural complexity is not as noticeable as it is from viewpoints closer to the project site. Also, visual contrast associated with surface color and textures is not as noticeable at this distance. Therefore, the proposed project would slightly reduce visual contrast in the view from KOP 8. This represents a slight reduction in visual contrast from the moderate-to-high visual contrast associated with the existing power plant when viewed from this location.

PROJECT DOMINANCE

While the existing power plant appears co-dominant in the landscape with the water form of the Morro Bay harbor, the plant's three 405-foot vertical stacks are clearly the most visually dominant structural features in the view from KOP 8. These structures dominate not only all other structural forms in the viewshed but the surrounding landforms as well. The proposed project would replace these dominant features and in the wide field of view available at KOP 8, the proposed structures would appear small-to-moderate in size. While the proposed project (including the power plant and water intake structure) would still be the most prominent structural features along the shoreline, the project would reduce overall prominence to a level co-dominant with the existing land and water forms in the landscape. This represents a reduction from the project dominance of the existing power plant.

VIEW BLOCKAGE

From Key Observation Point 8, the proposed project (lower quality features) would result in a net decrease in the blockage of sky and coastal hills (higher quality features) as a result of the removal of the existing plant and stacks. However, there are several offsetting factors with respect to this change in view blockage. First, the new power plant facilities would replace the existing tank farm but would result in the blockage of a coastal hill landscape that is currently undeveloped and is of higher visual quality than the hill slopes that would become visible with removal of the existing power plant. Second, while removal of the existing plant would eliminate all blockage of sky and open up views to the coastal hills to the east, those views would include the industrial appearance of numerous transmission lines (presently not visible) that descend the hills to the existing switchyard. Third, the new view would also encompass the Harbor Front Tract residential development on the hill slopes immediately east of the existing power plant. Views of the developed hillside partially offset the benefit of removal of the turbine building. Lastly, the increase in height of the water intake building would result in additional blockage of trees along Embarcadero Road. Therefore, view blockage associated with the proposed project is low. This represents a slight reduction from the low-to-moderate view blockage that presently occurs at this location with the existing power plant.

OVERALL VISUAL CHANGE

From KOP 8, the proposed project would be beneficial, reflecting several offsetting considerations in terms of visual contrast and view blockage.

VISUAL IMPACT SIGNIFICANCE

When considered within the context of the moderate-to-high visual sensitivity of the existing landscape and viewing characteristics, the beneficial visual change that would be perceived from KOP 8 would result in a non-significant visual impact. Although the visual impact is not considered significant, the importance of views from Morro Rock as a primary tourist attraction is such that Visual Resource Mitigation Measures VIS-1 and VIS-2 (see subsequent section entitled *Mitigation*) are recommended to further enhance the project view from KOP 8.

KOP 14 – SUNSET PLATEAU

VISUAL RESOURCES Figure 11B presents a photosimulation of the proposed project as viewed from KOP 14. The most obvious change to the landscape is the replacement of the existing power plant with a new power plant. Although the new facilities would be of a smaller scale and less prominent than the existing plant, they would encroach upon the sight lines to Morro Rock from the residences on Sunset Plateau unlike the existing plant.

VISUAL CONTRAST

The proposed project would eliminate the prominent geometric and linear forms of the existing power plant and replace them with less conspicuous but more complex forms and lines. The structural forms and lines established by the existing facilities and the urban characteristics of the foreground transportation infrastructure enable the existing landscape to absorb much of the industrial character of the proposed

facilities. Within this viewing context, the structural colors and textures of the proposed power plant do not appear incompatible with existing landscape characteristics. In the context of the moderate visual absorption capability of the KOP 8 viewshed, implementation of the proposed project would result in a low-to-moderate degree of visual contrast. This represents a reduction in visual contrast from the moderate-to-high visual contrast associated with the existing power plant.

PROJECT DOMINANCE

The dominant features in the existing landscape viewed from KOP 14 are the existing power plant with its three 405-foot stacks and Morro Rock. These two middleground features are somewhat separated but co-dominant in the landscape. Under the proposed project, the prominence of the existing plant would be eliminated with its removal. The new facilities would be of a smaller scale and sited in much closer viewing proximity to Morro Rock as seen from the Sunset Plateau residential area. In this location, the proposed plant would appear less prominent and somewhat overshadowed by Morro Rock in the immediate background. Though still noticeable, the new plant would appear subordinate to co-dominant in relationship to Morro Rock. This represents a reduction from the co-dominance of the existing power plant.

VIEW BLOCKAGE

From Key Observation Point 14, the proposed project (lower quality features) would result in an increase in the blockage of harbor waters and ocean (higher quality features) and a net decrease in the blockage of sky and coastal hills (also higher quality features). Yet, as viewed from KOP 14, Morro Rock presently stands apart from the existing power plant, a spatial relationship that helps to maintain the rock's unique solitary character. The proposed project would place the new power plant much closer to the sightlines of Morro Rock from several of the Sunset Plateau residences. From these perspectives, the plant's location would slightly diminish Morro Rock's dramatic rise from the nearshore waters. This encroachment on views of Morro Rock is an adverse view blockage outcome. However, taken in balance with the removal of the existing power plant and its attendant view blockage issues, the view blockage outcome is low with implementation of the proposed project. This represents a reduction from the moderate view blockage presently associated with the existing power plant.

OVERALL VISUAL CHANGE

From KOP 14, the overall visual change that the proposed project would cause would be beneficial, reflecting some offsetting considerations with respect to view blockage.

VISUAL IMPACT SIGNIFICANCE

When considered within the context of the moderate visual sensitivity of the existing landscape and viewing characteristics, the beneficial visual change that would be perceived from KOP 14 would result in a non-significant visual impact. Although the visual impact is not considered significant, the importance of the elevated coastal views is such that Visual Resource Mitigation Measure VIS-3 (see subsequent

section entitled *Mitigation*) is recommended to prevent night lighting impacts on the view area represented by KOP 14 (see subsequent section on *Lighting*).

KOP 15 – HARBOR FRONT TRACT

VISUAL RESOURCES Figure 12B presents a photosimulation of the proposed project as viewed from KOP 15 in the Harbor Front Tract residential area. The most obvious change to the landscape is the removal of the existing power plant and its blockage of Morro Rock. The new power plant would be substantially less noticeable at its proposed location on the existing tank farm site.

VISUAL CONTRAST

The proposed project would eliminate the prominent geometric and linear forms of the existing power plant and replace them with substantially less noticeable but more complex forms and lines. The structural forms and lines established by the existing power plant and the existing transmission lines and switchyard in particular enable the existing landscape to absorb much of the industrial character of the proposed facilities. The complex forms and lines of the lattice transmission line structures descending the coastal hills to the switchyard are effective in establishing viewshed characteristics similar to those of the proposed project. Also, within this viewing context, the structural colors and textures of the proposed power plant do not appear incompatible with existing landscape characteristics. In the context of the high visual absorption capability of the KOP 15 viewshed, implementation of the proposed project would result in low visual contrast. This represents a substantial reduction from the high visual contrast associated with the existing power plant when viewed from this location.

PROJECT DOMINANCE

The dominant features in the existing landscape viewed from KOP 15 are the existing power plant with its three 405-foot stacks and Morro Rock. These two middleground features are co-dominant in the landscape. Under the proposed project, the prominence of the existing plant would be eliminated with its removal. The new facilities would be of a smaller scale and sited in a location that would not only be less noticeable but would increase Morro Rock's visual dominance in the landscape. Though still noticeable, the new plant would appear co-dominant with the existing transmission line structures in the foreground of views from KOP 15. However, it would be seen as subordinate to the more dominant middleground presence of Morro Rock. This represents a reduction from the co-dominant-to-dominant presence of the existing power plant.

VIEW BLOCKAGE

From Key Observation Point 15, the proposed project (lower quality features) would result in a slight increase in the blockage of the coastal dune and beach and ocean landscape (higher quality features) and a net decrease in the blockage of sky and Morro Rock (also higher quality features). From the KOP 15 perspective, the proposed project would substantially improve the visual access to Morro Rock and the view blockage outcome would be low, representing a substantial reduction from the high view blockage caused by the existing power plant.

OVERALL VISUAL CHANGE

As viewed from KOP 15, the removal of the existing plant and the improvement of visual access to Morro Rock would constitute a substantially beneficial visual change.

VISUAL IMPACT SIGNIFICANCE

The substantially beneficial visual change that would be experienced at KOP 15 would not cause a significant visual impact.

KOP 19 – EMBARCADERO COMMERCIAL DISTRICT

VISUAL RESOURCES Figure 13B presents a photosimulation of the proposed project as viewed from KOP 19 in the Embarcadero commercial district. The proposed project and removal of the existing power plant would result in a substantial visual change to the district's landscape. A subordinate feature that would be substantially less visible and noticeable from the primary tourist commercial area would replace a co-dominant industrial feature.

VISUAL CONTRAST

The proposed project would eliminate the prominent geometric and linear forms of the existing power plant and replace them with substantially less noticeable structures. This reduction in visible elements of industrial character would also result in a low degree of visual contrast. This represents a substantial reduction from the high visual contrast associated with the existing power plant when viewed from this area.

PROJECT DOMINANCE

The existing power plant is a dominant vertical feature in the Embarcadero commercial district viewshed. The proposed facility would appear as a subordinate background feature to foreground commercial buildings in the landscape due to its apparent smaller scale (due to distance) and limited visibility. As a result, project dominance would be subordinate. This represents a reduction from the co-dominant-to-dominant presence of the existing power plant.

VIEW BLOCKAGE

From Key Observation Point 19, the proposed project (lower quality features) would result in a substantial reduction in the blockage of sky (a higher quality feature). The view blockage outcome would be low. This represents a reduction from the moderate view blockage that is caused by the existing power plant.

OVERALL VISUAL CHANGE

As viewed from KOP 19, the removal of the existing plant and limited visibility of the new facilities would constitute a substantially beneficial visual change.

VISUAL IMPACT SIGNIFICANCE

The substantially beneficial visual change that would be experienced at KOP 19 would not result in a significant visual impact.

KOP 20 – HIGHWAY 1

VISUAL RESOURCES Figure 14B presents a photosimulation of the proposed project as viewed from KOP 20 at the Main Street northbound onramp to Highway 1. The proposed project and removal of the existing power plant would result in a substantial visual change in the viewshed from Highway 1. Presently, this portion of Highway 1 has a considerable amount of roadside vegetative screening that limits views to the west toward the existing plant and plant site. However, the height of the existing stacks is such that they are still visible to motorists approaching from either the north or south. With implementation of the proposed project, the existing plant and stacks would be removed. The new plant would have structures and stacks considerably shorter in height than the existing plant. As a result, northbound traffic would have a substantially reduced view of power generation facilities since the existing vegetation would more effectively screen the shorter structures. Southbound views in the vicinity of this KOP would have similarly constrained views of the power generation facilities. However, from farther north of the project site (one-half to one mile north) the new power plant would be more visible.

VISUAL CONTRAST

The proposed project would eliminate the prominent geometric and linear forms of the existing power plant and replace them with substantially less noticeable but more complex forms and lines. To the extent that limited foreground views of the new power plant are available from Highway 1 over or through existing vegetation, views of the structural forms and lines established by the existing power plant, transmission lines, and switchyard would enable the existing landscape to absorb much of the industrial character of the proposed facilities. The complex forms and lines of the lattice transmission line structures are effective in establishing viewshed characteristics similar to those of the proposed project. Also, within this viewing context, the structural colors and textures of the proposed power plant would not appear incompatible with existing landscape characteristics. In the context of this high visual absorption capability, implementation of the proposed project would result in a beneficial reduction in visual contrast. Further north of the site, southbound views would have greater visual access to the new facilities but the result would be similar—less prominent vertical forms and lines but greater structural complexity, partially absorbed by the existing structural context. The overall reduction in the prominence of industrial-appearing structural elements would result in low visual contrast. This represents a reduction from the moderate visual contrast associated with the existing power plant when viewed from this location.

PROJECT DOMINANCE

The dominant features in the existing landscape viewed from KOP 20 are the existing power plant with its three 405-foot stacks, the existing transmission lines that span Highway 1 to the switchyard, and Morro Rock. These foreground features are co-dominant in the landscape. Under the proposed project, the prominence of the existing plant would be eliminated by its removal. The new facilities would be of a smaller scale and less noticeable due to screening by vegetation. Though the

new plant facilities would still appear co-dominant with Morro Rock and the existing transmission lines, they would be less prominent than the existing plant. This slight reduction in project dominance from the co-dominant-to-dominant presence of the existing power plant would enhance Morro Rock's visual prominence in the landscape.

VIEW BLOCKAGE

Under the proposed project, removal of the existing plant and installation of the new facilities would result in a reduction of the view blockage of the sky (higher quality feature) by industrial structural elements (lower quality feature) as viewed from KOP 20. The view blockage outcome would be low-to-moderate, representing a slight reduction from the moderate view blockage caused by the existing power plant.

OVERALL VISUAL CHANGE

When viewed from KOP 20 (and Highway 1 in general), the reduction in visual contrast and view blockage associated with the removal of the existing plant and the smaller scale of the new facility would constitute a beneficial visual change.

VISUAL IMPACT SIGNIFICANCE

The beneficial visual change that would be experienced at KOP 20 and along Highway 1 would not result in a significant visual impact.

ADDITIONAL VIEW AREAS

This section provides brief descriptions of the change in views from several additional view areas as a result of project implementation. With the exception of KOP 7 near the intersection of Morro Creek and Embarcadero Road, all other view areas are expected to experience improvement in the available views. Simulations of the proposed project from each of the following 13 viewpoints are provided in Appendix C.

KOP 1 – BLACK MOUNTAIN

The proposed project would result in a reduction of structural visual contrast and blockage of the coastal landscape when viewed from Black Mountain (Visual Resources Appendix C, Figure C-1). The visual change represents a beneficial impact on the view from this location.

KOP 2 – MORRO STRAND STATE BEACH CAMPGROUND ENTRANCE

The proposed project would result in a reduction of structural visual contrast and blockage of the coastal landscape when viewed from the entrance to the Morro Strand State Beach Campground (Visual Resources Appendix C, Figure C-2). The visual change represents a beneficial impact on the view from this location.

KOP 3 – HIGHWAY 1 AT SAN JACINTO STREET

The proposed project would result in a reduction of structural visual contrast and blockage of sky and coastal hills when viewed from southbound Highway 1 at San

Jacinto Street (Visual Resources Appendix C, Figure C-3). The visual change represents a beneficial impact on the view from this location.

KOP 4 – THE CLOISTERS

The proposed project would result in a reduction of structural visual contrast and blockage of sky when viewed from the Cloisters residential development (Visual Resources Appendix C, Figure C-4). The proposed project would no longer be visible from KOP 4 at this location due to additional residential development. Some of the more southerly residences would be able to see portions of the proposed plant above intervening vegetation. The visual change represents a beneficial impact on the view from the Cloisters development.

KOP 7 – MORRO CREEK AT EMBARCADERO ROAD

The proposed project would eliminate the prominent vertical forms and lines of the existing power plant stacks but would introduce more prominent complex forms and lines of the new plant and increased blockage of the sky (Visual Resources Appendix C, Figure C-5). Overall, the resulting change in views from this location is anticipated to be neutral.

KOP 9 – NORTH T PIER

The proposed project would result in a substantial reduction of structural visual contrast and blockage of sky when viewed from the T Pier (Visual Resources Appendix C, Figure C-6). Although the water intake building would have a greater mass and be more prominent in views from the pier, its architectural design would be more consistent with other waterfront structures along the Embarcadero. The new power plant would be barely visible due to intervening screening by structures and vegetation. The visual change represents a beneficial impact on the view from the T Pier.

KOP 10 – SCOTT STREET

The proposed project would result in a substantial reduction of structural visual contrast and blockage of sky when viewed from Scott Street (Visual Resources Appendix C, Figure C-7). Elimination of the existing stacks would increase Morro Rock's dominance over the visible landscape. Although the new power plant would be partially visible above the intervening trees, it would appear subordinate to the new prominence of Morro Rock. The visual change represents a beneficial impact on the view from Scott Street.

KOP 11 – HIGHWAY 41 AT 1-MILE DISTANCE

The proposed project would result in a reduction of structural visual contrast and blockage of sky when viewed from Highway 41 at a distance of approximately one mile (Visual Resources Appendix C, Figure C-8). The new power plant would block a portion of Morro Rock but would appear less noticeable given the solid backdrop provided by Morro Rock and the smaller scale of the proposed facilities. Also, elimination of the existing stacks would increase Morro Rock's dominance over the visible landscape. Although the new power plant would be partially visible above intervening vegetation, it would appear subordinate to the increased prominence of

Morro Rock. The visual change represents a beneficial impact on the view from Highway 41.

KOP 12 – HIGHWAY 41 AT 0.75-MILE DISTANCE

The proposed project would result in a reduction of structural visual contrast and blockage of sky when viewed from Highway 41 at a distance of approximately three-fourths of a mile (Visual Resources Appendix C, Figure C-9). Also, elimination of the existing plant and stacks would increase Morro Rock's prominence in the landscape. Although the new power plant would be partially visible above intervening vegetation and in closer proximity to sight lines to Morro Rock from Highway 1, it would appear subordinate to the increased dominance of Morro Rock. The visual change represents a beneficial impact on the view from Highway 41.

KOP 13 – MORRO DEL MAR SUBDIVISION

The proposed project would result in a reduction of structural visual contrast and blockage of sky and coastal landscapes when viewed from the Morro Del Mar Subdivision (Visual Resources Appendix C, Figure C-10). The new power plant would block views of a portion of the harbor entrance and sand spit and would be located in closer proximity to sight lines to Morro Rock. However, the project would appear subordinate to Morro Rock and substantially less noticeable compared to the existing facilities. The visual change represents a beneficial impact on the view from the Morro Del Mar Subdivision.

KOP 16 – MORRO BAY BOULEVARD EXIT FROM HIGHWAY 1

The proposed project would result in a reduction of structural visual contrast and blockage of sky and coastal landscapes when viewed the Morro Bay Boulevard exit from Highway 1 (Visual Resources Appendix C, Figure C-11). The new power plant would be almost completely obscured by intervening vegetation. The visual change represents a beneficial impact on the view from this location.

KOP 17 – MORRO HEIGHTS NEIGHBORHOOD

The proposed project would result in a reduction of structural visual contrast and blockage of sky and coastal landscapes when viewed from the Morro Heights Neighborhood (Visual Resources Appendix C, Figure C-12). The new power plant would block a substantially smaller portion of sky and ocean compared to the existing power plant and would be substantially less noticeable in the viewshed. The visual change represents a beneficial impact on the view from the Morro Heights Neighborhood.

KOP 18 – TIDELANDS PARK

The proposed project would result in a reduction of structural visual contrast and blockage of sky and coastal hills when viewed from the public dock at Tidelands Park (Visual Resources Appendix C, Figure C-13). Although the new power plant would be visible above intervening vegetation, it would exhibit a minimal amount of structural contrast and block a substantially smaller portion of the sky compared to the existing power plant. It would also appear subordinate to Morro Rock and would

be substantially less noticeable in the viewshed. The visual change represents a beneficial impact on the view from Tidelands Park.

LIGHTING

Existing visible night lighting in the project vicinity ranges from softer amber colored light to intense white light (see **VISUAL RESOURCES Figure 15**). Night lighting at the existing power plant is generally of low intensity, though some upward glare from older lighting equipment does occur. The red light warning beacons on the stacks conform to the Federal Aviation Administration Obstruction Marking and Lighting Advisory Circular (DUKE 2000a, p. 6.13-45). The following description of visible night lighting is based on the Applicant's response to Data Requests 134 and 135:

From the main gate of the Morro Bay Power Plant, light sources include: parking area lighting just inside the main gate, entrance lights at the Administration Building, bright lights illuminating the PG&E switchyard, highway lighting at the Highway 1 / Main Street interchange, bright lights at Lila Kaiser Park, industrial lighting at the cement plant, and the lower level lighting at the City of Morro Bay's sewage treatment plant and at the trailer park.

When viewed from KOP 5 at night, the Morro Bay city lights emanate from behind the coastal dunes while the brightest lights are from the Lila Kaiser ball field and the Morro Bay High School football fields. On evenings when there is fog or a low cloud ceiling, these lights further illuminate the area with reflected light. When the ball field lights are off, lighting from the power plant switchyard emanates upward, slightly brighter than the city lights behind. Parking lot lighting around the power plant is directed downward but does reflect back up the power plant walls, diminishing before reaching the top. Also, red aircraft beacons are visible on the stacks.

From KOP 6, prominent sources of night lighting include street lighting mounted on low wooden poles internal to the trailer park. Lights also emanate from the laundry located to the left of KOP 6. The existing aircraft beacon lights on the existing stacks are visible and the ball field lighting emanates into the area. From KOP 8, nearly all of the lights from the City of Morro Bay are visible in the distance from this perspective.

From KOP 14, When the lights are on at Lila Kaiser Park, they appear as the brightest light source in the vicinity of the site. Other sources of night light from this perspective include the gas station, street lighting, and the motel on Atascadero Road across Highway 1. Cars on Highway 1 also generate a near constant source of glare. More distant is the power plant. In addition to the visible aircraft warning beacons, the power plant reflects light from nearby sources. Other visible light sources include lighting in the industrial area, just behind the motel, and the glow of light from Old Town Morro Bay (see **VISUAL RESOURCES Figure 15**).

From KOP 15, the switchyard is the most prominent source of light at the existing power plant, which also reflects light up onto the power plant building. The red

aircraft warning beacons are also visible and lower level lighting emanates from the parking area and occasionally from the tank farm. From KOP 20, the brightest sources of light and glare are the headlights of vehicles along Highway 1 and Main Street, street lights, and the lights at the PG&E switchyard.

The proposed project would require nighttime lighting for operational safety and security. The Applicant has indicated that they are unable to provide detailed lighting information because a lighting plan has yet to be developed. However, it is reasonable to assume that night lighting would be used to illuminate exterior work areas, equipment and storage areas, building interiors, access ways, and parking areas. Project night lighting would be most visible from those KOPs closest to the project site (KOPs 5 and 6) and those KOPs with elevated perspectives (KOPs 14 and 15). Project night lighting viewed from KOP 8 would be seen within the context of the broader area lighting of the City of Morro Bay. Project night lighting would not be noticeable from KOP 19 but it would be visible from Highway 1 in the vicinity of KOP 20 but would be less noticeable in the context of oncoming headlights and other sources of lighting in the immediate project vicinity including roadside commercial uses, street lights, and the nearby ball fields.

Given the project site's closer proximity to prominent sources of night lighting including the High School and Lila Kaiser Park, when those fields are being used at night, it is likely that night lighting from the new power plant would be less noticeable than the night lighting at the existing power plant. This would be the case because the brighter field lighting would tend to overwhelm the lighting at the power plant.

With removal of the existing power plant and its associated night lighting, the proposed project lighting is not expected to substantially change ambient lighting conditions when the nearby ball fields are in use. When the ball fields are not in use and the playfield lights are not on, it is likely that the proposed power plant's closer proximity to KOPs 5 and 6 would noticeably increase visible ambient night lighting in those areas.

However, in order to reduce the offsite adverse impacts from night lighting, the Applicant has stated that caps would be provided on luminars to minimize upward glare (AFC: p. 6.13-58). The Applicant has also agreed to shield, conceal, reduce the intensity, and/or periodically eliminate sources of nighttime light (DUKE 2001c, Data Response 136, p. 1-4). The Applicant has further committed to using timers, sensors, and/or switches to keep lights off when they are not needed (DUKE 2001c, Data Response 137, p. 1-5).

Because of the potential for the project to cause adverse nighttime lighting impacts, the Energy Commission staff has expanded upon the Applicant's general commitment to the above quoted design measures in a proposed condition of certification VIS-3 (see below). Proper implementation of this condition is expected to minimize lighting and keep lighting impacts to less than significant levels.

VISIBLE HRSG EXHAUST PLUMES

The proposed project would involve the addition of two new combined-cycle gas turbine units, each served by two heat recovery steam generator (HRSG) stacks for a total of four exhaust stacks. An analysis of potentially visible plumes from the HRSG stacks was conducted by the Applicant using the Combustion Stack Visible Plume (CSVP) model. Staff reviewed that analysis and conducted an independent modeling analysis for comparison. The results of staff's analysis are presented here.

HRSG PLUME ANALYSIS

The Applicant's Data Responses #s 128-130 and 142-156 (DUKE 2001c) were evaluated and an independent psychrometric analysis and dispersion modeling analysis was performed to determine the validity of the Applicant's responses. The CSVP model was used to estimate the potential plume frequency, and to provide data on predicted plume length, width, and height. As stated above, the project has four separate HRSG stacks, and the plume data presented below represents plume frequencies and dimensions for each stack individually. While some plume interaction may occur, it would be limited due to the separation of the stacks.

HRSG PARAMETERS

The Applicant modeled two turbine operating conditions (100% load, no duct firing; and 100% load, duct firing) for the entire year. The Applicant stated in the response to Data Request #128 that these two conditions represent the operating conditions for the proposed plant where duct firing is assumed to occur from 6 AM to 8 PM daily. Although the values presented were reasonable, the AFC did not provide sufficient data to confirm the Applicant's contention that the conditions modeled were in fact conservative for use under all cold weather operating conditions. The proposed plant would not use power augmentation (i.e. water injection) and duct burners are generally operated during high temperature low humidity ambient conditions when power output from the gas turbine is diminished. Therefore, staff has determined that the exhaust parameters provided in Table 1 should provide reasonable plume frequency results.

METEOROLOGICAL DATA SUMMARY

The Applicant provided three years of onsite meteorological data, which included relative humidity data, but did not include weather phenomena data (i.e., occurrence of fog, rain, etc.). The significant variability of this data, particularly the relative humidity data, makes the validity of this data set somewhat questionable; and this data set may not provide representative long-term conditions at the site. However, this data is likely to represent the variability that may occur during each season of the year and the variability of each season from year to year.

Table 1
HRSG Exhaust Parameters Provided by the Applicant

Parameter	HRSG Exhaust Parameters	
	100% Load, No Duct Firing	100% Load, Duct Firing

Stack Height	44.2 meters	44.2 meters
Stack Diameter	5.8 meters	5.8 meters
Exhaust Temperature	360.8°K	355.8°K
Exit Velocity (calculated)	20.08 m/s	19.96 m/s
Exhaust mass flow rate	3,609,000 lbs./hr	3,625,422 lbs./hr
Moisture Content (% by weight)	5.34%	6.28%

STAFF CSVP MODELING ASSESSMENT

Initially, the conditions that the Applicant used for modeling the HRSG exhaust were reviewed. The 1994 through 1996 onsite meteorological data set provided by the Applicant was used to model the HRSG plume potential using the CSVP model. The modeling results indicate plume formation would occur 1,380 hours of the modeling period. Of these 1,380 hours, 469 occurred at night and another 911 occurred during daylight hours. A summary of the predicted visible plume frequency is presented in Table 2 and is based on the total number of hours in that category. For example, the 479 day hours that a plume would have been visible in 1994, represents 11% of the daylight hours that occurred in that year (approximately 4,354 hours).

Table 2
Staff Predicted HRSG Steam Plume Frequency Summary

	1994		1995		1996	
	Hours	**Frequency**	**Hours**	**Frequency**	**Hours**	**Frequency**
Day	479	11.0%	119	2.7%	313	7.1%
Night	331	7.7%	36	0.8%	102	2.3%
Total	810	9.4%	155	1.8%	415	4.7%

The frequencies predicted by the CSVP model are slightly greater than those predicted by the Applicant's plume model. Averaged over the three years, the frequency of daytime occurrence is approximately 6.9% inclusive of all viewing conditions. The predicted seasonal daylight HRSG visible plume frequencies are presented in Table 3.

Table 3 shows a significant seasonal and yearly variability regarding plume potential. The average values indicate that the daytime plumes are actually more frequent in the spring and summer than fall and winter, which is reasonable for this location considering that the warmest season is fall and that daytime fog events are predominantly marine influenced and the daytime onshore wind pattern is most pronounced in the summer. The total plume frequency predicted is slightly higher than that predicted by the Applicant.

Table 3
Staff Predicted Daylight Hours with HRSG Steam Plumes

Season	1994		1995		1996		Totals	
	Hours	**Percent**	**Hours**	**Percent**	**Hours**	**Percent**	**Hours**	**Percent**

Fall	48	4.90%	27	2.76%	70	7.16%	145	4.94%
Spring	256	20.60%	64	5.15%	3	0.24%	323	8.66%
Summer	61	4.92%	2	0.16%	223	17.98%	286	7.68%
Winter	114	12.58%	26	2.70%	17	1.74%	157	5.52%
Total	479	10.97%	119	2.69%	313	7.05%	911	6.88%

The ambient conditions that occur during predicted plume events are characterized by cool ambient temperatures with high relative humidities. The range of ambient conditions where cooling tower plumes are predicted is presented in Table 4.

Table 4
Ambient Conditions During Hours with Predicted HRSG Plumes
Morro Bay Meteorological Data 1994 - 1996

All Hours	Temperature	Relative Humidity
Maximum	57.3°F	100%
Minimum	38.1°F	51%
Average	51.0°F	95%
Median	51.9°F	96%
Daylight		
Maximum	57.1°F	100%
Minimum	39.7°F	51%
Average	51.9°F	95%
Median	52.5°F	96%

Plume frequencies and dimensions during clear daytime hours are the most important issue when determining potential significance. A review of several California Coastal meteorological data sets indicated that approximately 75 to 80% of the time when the relative humidity is above 95% there is some form of visibility obscuring weather phenomena (i.e. fog, rain, etc.). In order to assess when plumes are likely to occur under high visibility conditions it was conservatively assumed that 70% of the hours with greater than 95% relative humidity were visibility impaired. Using this basis the high visibility plume frequency data was obtained and is presented in Table 5. As shown in the table, under high visibility conditions, the frequency of plume occurrence drops from 6.9% under all viewing conditions (as previously discussed) to approximately 4%. The CSVP predicted plume size characteristics are presented in Table 6.

Also, for this site the direction of the plumes is important because Morro Rock is a significant visual resource. Staff determined the daytime plume direction frequencies presented in Table 7 through the direct analysis of the hourly wind direction of each hour with a plume predicted.

Table 5
Staff Predicted High Visibility Daylight Hours with HRSG Steam Plumes

	1994		1995		1996		Totals	
Season	**Hours**	**Percent**	**Hours**	**Percent**	**Hours**	**Percent**	**Hours**	**Percent**
Fall	48	4.90%	27	2.76%	26	3.03%	101	3.59%
Spring	116	11.07%	64	5.15%	3	0.24%	183	5.18%
Summer	38	3.15%	2	0.16%	71	7.58%	111	3.28%

Winter	58	6.98%	26	2.70%	15	1.54%	99	3.58%
Total	260	6.40%	119	2.69%	115	2.87%	494	3.95%

Table 6
Staff Predicted HRSG Steam Plume Dimensions (meters)

All Hours	**Length**	**Height**	**Width**
Maximum	1009	620	55
Average	308	301	40
Median	237	264	41
Daylight Hours			
Maximum	606	620	54
Average	227	319	39
Median	203	304	41
Daylight Hours <95% RH			
Maximum	606	620	54
Average	218	323	39
Median	199	307	41

The average and median values reflect the average and median dimensions when plumes occur.

The staff's determined plume direction frequencies are not exactly the same as those determined by the Applicant (see plume roses in Appendix D). However, the general finding by both staff's and the Applicant's analyses is that the majority of the plume frequencies occur in the westerly and easterly directions (i.e. offshore and onshore), while visible plumes in northerly and southerly directions are predicted to be considerably less frequent.

One issue of concern with respect to plume formation and direction of drift is the potential for plumes to block views of Morro Rock, particularly from the elevated perspectives of the Sunset Plateau and Harbor Front Tract residential areas. From the Sunset Plateau residential area (KOP 14), the direction of drift of most concern is the north to west quadrant. Given the average plume dimensions presented in Table 6, it is likely that some of the plumes drifting in the north to west directions would obscure views of Morro Rock from the Sunset Plateau residential area. The percentage of time that the plumes would drift into the north to west quadrant is approximately 30% (see Table 7). Given that plumes would occur approximately 4% of high visibility daylight hours, the maximum percentage of time that a plume might block views of Morro Rock when viewed from the Sunset Plateau residential area would be approximately 1.2% of the time (4% x 0.3).

Similarly, from the Harbor Front Tract residential area (KOP 15), the direction of drift of most concern is the east to south quadrant. Again, it is likely that some of the plumes drifting in the east to south directions would obscure views of Morro Rock from the Harbor Front Tract residential area. The percentage of time that the plumes would drift into the east to south quadrant is approximately 41% (see Table 7). Given that plumes would occur approximately 4% of high visibility daylight hours, the maximum percentage of time that a plume might block views of Morro Rock when viewed from the Harbor Front Tract residential area would be approximately 1.6% of the time (4% x 0.41).

Table 7
Staff Predicted HRSG Steam Plume Direction Frequencies

	Daylight Hours				Daylight Hours – RH<95%			
Wind Direction (to)	**1994**	**1995**	**1996**	**Average**	**1994**	**1995**	**1996**	**Average**
North	0.4%	0.0%	3.2%	1.3%	0.0%	0.0%	0.0%	0.00%
North-Northeast	2.1%	2.5%	3.5%	2.6%	1.2%	2.5%	0.0%	1.56%
Northeast	7.9%	2.5%	11.5%	8.5%	5.3%	2.5%	0.0%	3.75%
East-Northeast	6.3%	5.9%	10.2%	7.6%	1.8%	5.9%	0.0%	3.13%
East	11.5%	5.9%	12.1%	11.0%	5.9%	5.9%	9.4%	6.25%
East-Southeast	26.1%	16.0%	25.2%	24.5%	23.1%	16.0%	9.4%	19.06%
Southeast	5.0%	4.2%	2.9%	4.2%	4.1%	4.2%	0.0%	3.75%
South-Southeast	0.2%	0.8%	0.3%	0.3%	0.0%	0.8%	0.0%	0.31%
South	0.6%	0.8%	0.3%	0.5%	0.6%	0.8%	3.1%	0.94%
South-Southwest	0.8%	0.8%	0.0%	0.5%	0.6%	0.8%	0.0%	0.63%
Southwest	1.5%	1.7%	0.0%	1.0%	3.0%	1.7%	0.0%	2.19%
West-Southwest	5.2%	10.9%	2.2%	4.9%	8.3%	10.9%	12.5%	9.69%
West	4.0%	12.6%	4.2%	5.2%	4.1%	12.6%	31.3%	10.00%
West-Northwest	15.0%	16.0%	6.4%	12.2%	24.9%	16.0%	25.0%	21.56%
Northwest	4.4%	5.9%	3.2%	4.2%	7.1%	5.9%	6.3%	6.56%
North-Northwest	1.9%	3.4%	2.6%	2.3%	3.0%	3.4%	0.0%	2.81%
Calm	7.1%	10.1%	12.1%	9.2%	7.1%	10.1%	3.1%	7.81%
Total	100.0%	100.0%	100.0%	100.0%	100.0%	100.0%	100.0%	100.0%

CONCLUSIONS AND RECOMMENDATIONS

While visible plumes from the HRSG exhausts would occur from the MBPP Project during periods of cold weather or cool wet weather, the actual frequency of occurrence would vary from year to year. Additionally, HRSG plume formation can occur during the daytime or nighttime. However, based on the duct firing operating profile, the results indicate that the conditions for plume formation are most prevalent during daytime hours. Of all daylight hours with plumes predicted, a total of 71% were predicted to occur before 10 AM. Of daylight hours with relative humidities below 95% (i.e. likely high visibility daytime hours) a total of 81% were predicted to occur before 10 AM.

The results of the staff CSVP modeling analysis show slightly more frequent and slightly larger plumes than the Applicant. This difference may result in part from differences in the modeling programs used and slightly different mathematical representations of the saturation curve.

Given the relatively low frequency of daytime plume occurrence (6.9% of the time under all viewing conditions and 4% of the time under conditions of high visibility), plume formation is not expected to result in significant visual impacts. Also, the maximum frequency of view blockage of Morro Rock by plumes when observed from the elevated residential perspectives of Sunset Plateau and Harbor Front Tract would be very low, averaging approximately 1.5% (maximum) of high visibility

daylight hours. Given this low frequency of view blockage, the resulting visual impact would not be significant.

CONSIDERATION OF IMPACTS IN RELATION TO CEQA SIGNIFICANCE CRITERIA

This analysis considered the potential impacts of the proposed project in relation to the four significance criteria for visual resource impacts listed in Appendix G of the CEQA Guidelines, under Aesthetics, specified below.

1. Would the project have a substantial adverse effect on a scenic vista?

   Although panoramic views are available to nearby recreationists, residents, visitors, and motorists, the proposed project would not adversely impact recognized or designated scenic vistas in the project viewshed. Therefore, the project would not cause significant visual impacts in regard to this criterion.

2. Would the project substantially damage scenic resources, including, but not limited to, trees, rock outcroppings, and historic buildings within a state scenic highway?

   Although the project is located within the viewshed of an adjacent state-designated scenic highway, the new facilities would be installed at the site of an existing tank farm of industrial character. Therefore, the power plant facilities would not cause significant visual impacts in regard to this criterion.

   However, as discussed below under number 3, it must be assumed that the two offsite marshalling areas adjacent to the state-designated scenic Highway 1 would result in significant and unavoidable visual impacts under this criterion.

3. Would the project substantially degrade the existing visual character or quality of the site and its surroundings?

   As previously discussed, the proposed project would introduce prominent structures of industrial character into the foreground of views from Morro Strand State Beach (KOP 5) and Morro Dunes Trailer Park Resort Campground. Viewers from these locations are considered highly sensitive to landscape change and the proposed project would substantially degrade the quality of views from these areas. Therefore, the project is expected to cause significant visual impacts in regard to this criterion. However, implementation of staff-proposed mitigation measures and conditions of approval (see below) would reduce project impacts to KOPs 5 and 6 to a level that would be less than significant.

   Also, the sequence of construction and demolition would result in views of substantial construction and demolition activities and equipment over a period of approximately five years. During this time, a substantial portion of the new plant and existing plant would be concurrently visible along with the necessary construction cranes, vehicles, and equipment. During this time period, the resulting visual impact would be significant and unavoidable, particularly as

experienced from the elevated perspectives of the Sunset Plateau and Harbor Front Tract residential areas.

Furthermore, lacking precise information about the two offsite marshalling areas adjacent to Highway 1, it must be assumed that the marshalling areas would be prominently visible in the viewshed of Highway 1, a state-designated scenic highway. This circumstance would result in significant and unavoidable visual impacts on views from Highway 1 during the entire six-year construction schedule.

4. Would the project create a new source of substantial light or glare that would adversely affect day or nighttime views in the area?

   The project has the potential to create a new source of substantial light that could adversely affect nighttime views in the area. However, the exterior lighting control measures required under staff's mitigation measure VIS-3 (see below) would ensure that lighting impacts would be less than significant.

CUMULATIVE IMPACTS

Cumulative impacts to visual resources could occur where project facilities or activities (such as construction) occupy the same field of view as other built facilities or impacted landscapes. It is also possible that a cumulative impact could occur if a viewer's perception is that the general visual quality of an area is diminished by the proliferation of visible structures (or construction effects such as disturbed vegetation), even if the new structures are not within the same field of view as the existing structures. The significance of the cumulative impact would depend on the degree to which (1) the viewshed is altered; (2) visual access to scenic resources is impaired; (3) visual quality is diminished; or (4) the project's visual contrast is increased.

Based on consultations with the City of Morro Bay and the County of San Luis Obispo, the Applicant has identified 25 projects to be evaluated for cumulative impact potential (Duke 2000a, Table 6.1-1). None of the county-identified projects are located sufficiently close to the proposed power plant to be visible or noticeable within the same viewshed as the power plant. Therefore, these projects would not have the potential to cause cumulative visual impacts in conjunction with the proposed project.

Of the 16 city-identified projects, Cumulative Project #1 (RV campground), which would be located near Coleman Park on the sand spit between Morro Rock and Embarcadero, would likely result in a cumulative visual impact with the proposed power plant when viewed from KOPs 5 and 8. Additional design details would need to be provided to determine if the resulting cumulative visual impact would be significant or not. However, Project #1 has been put on hold and no additional information is available.

Cumulative Project #2 (The Cloisters) would be visible in the same viewshed as the proposed project when viewed from KOPs 2 and 3. However, at these distances,

the proposed project would not be prominent in the viewshed and portions of Project #2 would be screened by existing structures. The resulting cumulative visual impact would be adverse but not significant.

Cumulative Project #3 (Tri-W Shopping Center) would be visible within the same viewshed as the proposed project when viewed from KOPs 1 and 16. However, from KOP 1, Project #3 would appear as a continuation of the urban development boundary and would not be a prominent feature in the landscape. Also, the proposed project would be minimally noticeable and appear subordinate in the landscape when viewed from KOP 1. When viewed from KOP 16, Project #3 would be visible but the proposed project would be almost entirely screened from view by intervening vegetation. Taken together, these two projects would not result in a significant cumulative impact.

Cumulative Projects #4 (Colmer Housing Tract) and #5 (Harbor View Hotel) would not be noticeable in the landscape when viewed from any of the KOPs and thus, would not result in a significant cumulative visual impact when considered with the proposed project.

Cumulative Project #6 (Rock ‘n Burger) would be visible from KOP 14 but in the context of adjacent buildings would not be prominent or generally noticeable. Therefore, it would not result in a significant cumulative visual impact when viewed in conjunction with the proposed project.

Cumulative Project #7 (small commercial project) would be visible from KOP 5 and may be visible from KOPs 14 and 15. It is possible that this project may result in a cumulative visual impact with the proposed power plant when viewed from KOP 5. However, additional design details would need to be provided in order to assess whether or not the project would be visible from KOP 5 above the intervening dunes and to determine if any resulting cumulative visual impact would be significant or not. From KOPs 14 and 15, it is doubtful that Project #7 would be substantially noticeable due to the greater distance and the potential screening that may be provided by intervening vegetation and the proposed power plant. Any cumulative visual impact perceived from KOPs 14 and 15 is not anticipated to be significant.

Cumulative Project #8 (small commercial project) may be visible from KOP 8 but would not be noticeable in the context of the surrounding commercial development. Therefore, a significant cumulative visual impact is not anticipated.

Cumulative Projects #9 and #10 (small commercial projects) may be visible from KOP 16 but would not be noticeable given the direction of the viewer’s attention after exiting Highway 1 and the developed context surrounding these two cumulative projects.

Cumulative Projects #s 11 and 12 (small commercial projects) would not be visible from any of the selected KOPs and would not result in a cumulative impact when considered within the viewing context of the proposed project.

Cumulative Projects #s 13 to 16 are small residential projects and would not be noticeable from any of the selected KOPs and are therefore not expected to result in cumulative visual impacts in conjunction with the proposed project.

Finally, with removal of the existing power plant and elimination of its attendant plume, the addition of the proposed project would not be perceived as a proliferation of visible industrial structures and attributes contributing to a deterioration of visual quality.

FACILITY CLOSURE

There are at least three circumstances in which a facility closure can take place, planned closure, unexpected temporary closure and unexpected permanent closure.

Planned closure occurs at the end of a project's life, when the facility is closed in an anticipated, orderly manner, at the end of its useful economic or mechanical life, or due to gradual obsolescence. The closure plan that the project owner is required to prepare should address removal of the power plant structures.

Unexpected temporary closure occurs when the facility is closed suddenly and/or unexpectedly, on a short-term basis, due to unforeseen circumstances such as a natural disaster, or an emergency. No special conditions regarding visual resources are expected to be required to address temporary closure.

Unexpected permanent closure occurs if the project owner closes the facility suddenly and/or unexpectedly, on a permanent basis. This includes unexpected closure where the owner remains accountable for implementing the on-site contingency plan. It can also include unexpected closure where the project owner is unable to implement the contingency plan, and the project is essentially abandoned. The contingency plan that the project owner is required to prepare should address removal of the power plant structures.

COMPLIANCE WITH LAWS, ORDINANCES, REGULATIONS, AND STANDARDS

STATE

The proposed project would result in an overall improvement in the Highway 1 viewshed in the project vicinity because the benefits due to the removal of the existing power plant would exceed the adverse effects of the proposed power plant. As a result, the project would be consistent with policies and planning guidance pertaining to the protection and enhancement of scenic resources within the scenic Highway 1 corridor.

LOCAL

Table 8 provides a preliminary listing of applicable LORS of the City of Morro Bay. Relevant programs and policies pertain to both visual quality and landscaping. An opinion on the proposed project's consistency with local programs and policies was received from the City of Morro Bay too late to be incorporated into the staff's preliminary consistency determination provided in Table 8. However, of the sixteen local programs and policies identified in Table 8, the proposed project was found to be potentially consistent with eight programs and policies and potentially inconsistent with the remaining eight programs and policies. The City's opinion and the discussion of this issue at PSA workshops will be incorporated into staff's FSA.

Table 8
Preliminary Determination of the Proposed Project's Consistency with City of Morro Bay LORS Applicable to Visual Resources

LORS		Preliminary Consistency Determination Before Mitigation	Basis for Consistency Determination
Policy No.	Policy Description		
CITY OF MORRO BAY GENERAL PLAN (GP)			
GP Program C-1.4	Future walkways and bikeway on PG&E property along its Embarcadero frontage should be designed in a meandering fashion to minimize loss of existing trees and landscaping. Reduced walkway and/or bikeway widths (or a combined facility) may be allowed where necessary to retain landscaping.	Potentially Consistent	The proposed project improves coastal access by creating or improving three segments of a bike and pedestrian path around the plant site. Of particular importance is a bridge over Morro Creek and a new east-west bike path between Highway 1 and the Embarcadero. The Landscaping Concept Plan would minimize loss of existing trees and landscaping.
GP Policy LU-19	The City should do everything it possibly can to keep the fishing village atmosphere and balance the mixture of the land uses on the Embarcadero.	Potentially Consistent	Assuming the implementation of the agreements called out in the February 2000 MOU between the City of Morro Bay and Duke Energy, the intake building exterior would be renovated. Also, removal of the existing power plant would reduce the dominance of industrial uses and improve the overall balance of land uses on the Embarcadero.
GP Program LU-37.8	Public rest areas should be incorporated into the street rights-of-way in Downtown and along the Embarcadero. These areas should consist of benches, trash receptacles, drinking fountains, landscaping, information signing or kiosks, and decorative paving and planters.	Potentially Consistent	The Landscaping Concept Plan provides interpretive signs and benches along Embarcadero Road.
GP Program LU-39.1	The City shall designate the existing PG&E parcel and the Chevron pier parcel as coastal-dependent industrial uses. Any proposals for energy-dependent industrial uses within zones designated general industrial development will require an amendment to the land use plan consistent with Section 30515 of the Coastal Act. Power plant expansion on PG&E owned	Potentially Consistent	The project's location would not further affect the views of Morro Rock from Highway 1 and high use visitor serving areas. Furthermore, removal of the existing plant opens

Table 8
Preliminary Determination of the Proposed Project's Consistency with City of Morro Bay LORS Applicable to Visual Resources

LORS		Preliminary Consistency Determination Before Mitigation	Basis for Consistency Determination
Policy No.	Policy Description		
	property shall have priority over other coastal dependent industrial uses. Power plant expansion shall be limited to small facilities whose location would not further affect the views of Morro Rock from State Highway One and high use visitor-serving areas, consistent with Policy 12.11 of the LCP.		some views to Morro Rock.
GP Program LU-40.16	As a condition of any expansion of the PG&E power plant, the City will require substantial landscaping and screening to mitigate the visual impacts of existing and future facilities; with particular emphasis on screening the facilities located between the power plant and Highway 1.	Potentially Inconsistent	The proposed project includes a proposed conceptual landscaping and screening plan. However, the proposed plan would not adequately screen views of the proposed project from KOPs 5 and 6, resulting in significant visual impacts.
GP Program LU-55.2	Development in areas adjacent to Environmentally Sensitive Habitat (ESH) areas and parks and recreation areas shall be sited and designed to prevent impacts which would significantly degrade such areas, and shall maintain the habitats' functional capacity.	Potentially Inconsistent	The proposed project's location and industrial character would result in significant visual impacts to Morro Strand State Beach.
GP Policy LU-62.1	All development at or adjacent to the harbor or beach areas shall provide for physical and visual public access to these features.	Potentially Consistent	Project development would provide physical and/or visual public access to the harbor or beach areas. The project would improve physical and visual access by removing the three existing 450-foot tall stacks and the existing power building for Units 1-4, constructing a bridge over Morro Creek, and creating a pedestrian and bike path circulation loop around the MBPP property. The Landscaping Concept Plan calls for the trimming of tall eucalyptus trees to improve viewsheds to the harbor, Morro Rock, and the Pacific from the Harbor Front Tract and Scott Street neighborhoods.
GP Program VR-3.4	Industrial developments shall be sited and designed in areas specifically designated in the Land Use Plan to protect views to and along the ocean and scenic areas, to minimize land alteration, to be visually compatible with the character of the surrounding areas, and where feasible, shall include measures to restore and enhance visually degraded areas. In addition, industrial development shall be subordinate to the character of its setting.	Potentially Inconsistent	The proposed project's industrial character including complex forms and industrial metallic coloration and texture would substantially contrast with the existing landscape when viewed from KOPs 5 and 6.
CITY OF MORRO BAY LOCAL COASTAL PLAN (LCP)			

Table 8
Preliminary Determination of the Proposed Project's Consistency with City of Morro Bay LORS Applicable to Visual Resources

LORS		Preliminary Consistency Determination Before Mitigation	Basis for Consistency Determination
Policy No.	Policy Description		
LCP Policy 5.01	The City shall designate the existing PG&E parcel and the Chevron pier parcel as coastal dependent industrial uses. Any proposals for energy development industrial uses within zones designated for general industrial development will require an amendment to the land use plan consistent with Section 30515 of the Coastal Act. Power plant expansion shall be limited to small facilities whose location would not further affect the views of Morro Rock from Highway 1 and high use visitor-serving areas, consistent with policy 12.11.	Potentially Consistent	The proposed project site is zoned M-2 Coastal Dependent Industrial because it needs immediate access to seawater for cooling purposes. The project site is not zoned General Industrial. Accordingly, the project does not need an amendment to the LCP. The project would be set back from the waterfront and would improve the views of Morro Rock from many viewpoints.
LCP Policy 5.21	As a condition of any expansion of the PG&E power plant, the City will require substantial landscaping and screening to mitigate the visual impacts of existing and future facilities, with particular emphasis on screening the facilities between the power plant and Highway 1.	Potentially Inconsistent	The proposed project includes a proposed conceptual landscaping and screening plan. However, the proposed plan would not adequately screen views of the proposed project from KOPs 5 and 6, resulting in significant visual impacts.
LCP Policy 11.02	Development in areas adjacent to ESH areas and parks and recreation areas shall be sited and designed to prevent impacts which would significantly degrade such areas, and shall maintain the habitats' functional capacity.	Potentially Inconsistent	The project's location and industrial character would result in significant visual impacts to Morro Strand State Beach as demonstrated from KOP 5.
LCP Policy 12.01	The scenic and visual qualities of coastal areas shall be considered and protected as a resource of public importance. Permitted development shall be sited and designed to protect views to and along the ocean and scenic and coastal areas, to minimize the alteration of natural land forms, to be visually compatible with the character of the surrounding areas, and where feasible, to restore and enhance visual quality in visually degraded areas. New development in highly scenic areas, shall be subordinate to the character of its setting.	Potentially Inconsistent	The proposed project's industrial character including complex forms and lines and industrial metallic coloration and texture substantially contrasts with the existing landscape characteristics when viewed from KOPs 5 and 6.
LCP Policy 12.02	Permitted development shall be sited and designed to protect views to and along the coast and designated scenic areas and shall be visually compatible with the surrounding areas. Specific design criteria shall be established for the following areas: a) The Embarcadero (defined in Policy 2.03)	Potentially Inconsistent	The proposed project's industrial character including complex forms and lines and industrial metallic coloration and texture substantially contrasts with the existing landscape characteristics when viewed from KOPs 5 and 6.

Table 8
Preliminary Determination of the Proposed Project's Consistency with City of Morro Bay LORS Applicable to Visual Resources

LORS		Preliminary Consistency Determination Before Mitigation	Basis for Consistency Determination
Policy No.	Policy Description		
	b) Downtown commercial area The criteria shall include the following specific requirements and shall be applied to proposed projects on a case-by-case basis during architectural review: a) Building height/bulk relationship compatible with existing surrounding uses; b) Landscaping to restore and enhance visually degraded areas using native and drought resistant plant and tree species; and c) Preservation and enhancement of views of the ocean, bay, sand spit, and Morro Rock;		
LCP Policy 12.06	New development in areas designated on Figure 31 as having visual significance shall include as appropriate the following: a) Height/Bulk relationships compatible with the character of the surrounding areas or compatible with neighborhoods or special communities, which, because of their unique characteristics, are popular visit destination points for recreation, uses. b) Designation of land for parks and open space in new developments, which because of their location are popular destination, points for recreation uses. c) View easement or corridors designed to protect views to and along the ocean and scenic and coastal areas.	Potentially Consistent	The proposed project would improve power plant height/bulk relationships, coastal access for recreational users, and view corridors, as compared to the existing facilities.
LCP Policy 12.08	Morro Bay shall request the division of Highways to develop a plan and program for landscaping the entire length of State Highway One as it traverses through the community that	Potentially Consistent	The Applicant has committed to coordinating the landscaping of the site with the City of Morro Bay and PG&E.

Table 8
Preliminary Determination of the Proposed Project's Consistency with City of Morro Bay LORS Applicable to Visual Resources

LORS		Preliminary Consistency Determination Before Mitigation	Basis for Consistency Determination
Policy No.	Policy Description		
	would: a) Frame and protect important views; b) Screen unattractive views; and c) Accentuate entrances to the City.		
LCP Policy 12.11	Industrial development will be sited and designed in areas specifically designated in the Land Use Plan to protect views to and along the ocean and scenic coastal areas, to minimize land alteration, to be visually compatible with the character of the surrounding areas, and where feasible, shall include measures to restore and enhance visually degraded areas. In addition, industrial development shall be subordinate to the character of its setting.	Potentially Inconsistent	The proposed project's industrial character including complex forms and lines and industrial metallic coloration and texture substantially contrasts with the existing landscape characteristics when viewed from KOPs 5 and 6.

MITIGATION

APPLICANT'S PROPOSED MITIGATION MEASURES

Beyond the design and landscaping proposals incorporated into the proposed project, the Applicant has proposed no mitigation measures.

ADDITIONAL MITIGATION

Energy Commission staff generally agrees with the Applicant's proposed design and landscaping concepts. However, staff's position is that the these proposals need to be modified and/or more precisely developed in conditions of certification, which staff proposes below. In particular, the color and surface treatment of proposed project features must be modified to minimize the project's highly contrasting industrial metallic character and blend the structures more effectively into the existing landscape (Mitigation Measure VIS-1). Most importantly, the Conceptual Planting Plan must be modified in order to provide more effective screening of the project as viewed from KOPs 5 and 6 and to reduce the overall time necessary to achieve maximum screening (Mitigation Measure VIS-2). Additionally, the project has the potential to create a new source of substantial light that could adversely affect nighttime views in the area. Therefore, staff proposes the following three mitigation measures:

VIS-1 The project owner shall modify the surface treatment of the proposed facilities (including color and texture) to better blend the proposed project with the existing coastal landscape.

VIS-2 The project owner shall revise the Conceptual Landscaping Plan to achieve more effective screening of proposed project facilities when viewed from KOP 5 on Morro Strand State Beach and KOP 6 at the Morro Dunes Trailer Park and Resort Campground. Trees and other vegetation must be strategically placed and of sufficient density to screen the sound wall and most lower structural forms (not the upper portions of the stacks or the upper piping). Trees must be planted sufficiently close to the southern boundary of the trailer park to effectively screen the power plant from views within the trailer park. Furthermore, vegetation must reach maturity and full screening potential within five (5) years of completion of construction of the new power plant. Prior to project approval, the project owner shall submit to CEC staff for review and approval, revised photo simulations of the landscaping plan as viewed from KOPs 5 and 6.

VIS-3 Prior to first turbine roll, the project owner shall design and install all lighting such that light bulbs and reflectors are not visible from public viewing areas and illumination of the vicinity and the nighttime sky is minimized.

CONCLUSIONS AND RECOMMENDATIONS

CONCLUSIONS

Staff concludes that from most viewing areas of the existing power plant and proposed project site, the proposed project would result in an overall long-term improvement in visual quality. Staff has also concluded that the proposed project would cause adverse visual impacts during the six-year period of construction and demolition. However, given the long-term visual improvement that would occur with removal of the existing power plant, these interim construction impacts are not considered significant. One possible exception to this conclusion is the potential visual impact associated with the two offsite marshalling areas. The Applicant has indicated that the two marshalling areas are to be located south of the City of Morro Bay and adjacent to Highway 1, which is a state designated scenic highway. The precise location of these marshalling areas has not been identified and therefore, the significance of any resulting visual impacts cannot yet be determined. However, if the marshalling areas are prominent in views from Highway 1, significant visual impacts may result.

The proposed project also has the potential to cause long-term significant adverse visual impacts to Morro Strand State Beach and the Morro Dunes Trailer Park and Resort Campground. These long-term operational impacts would result from the project's contrasting appearance and foreground visibility. The project also has the potential to cause nighttime lighting impacts when viewed from the elevated perspectives of the Sunset Plateau and Harbor Front Tract residential areas. The significance of the potential lighting impacts cannot be determined at this time because the project is lacking a detailed lighting plan. However, effective implementation of staff's proposed mitigation measures and conditions of

certification would reduce the long-term significant adverse visual impacts and any potential nighttime lighting impacts to levels that are not significant.

An opinion on the proposed project's consistency with local programs and policies was received from the City of Morro Bay too late to be incorporated into this preliminary staff assessment. However, staff's preliminary consistency determination is that of the sixteen local programs and policies pertaining to visual resources, the proposed project is potentially consistent with eight programs and policies and potentially inconsistent with the remaining eight programs and policies.

RECOMMENDATIONS

The Energy Commission should adopt the following conditions of certification if it approves the project.

PROPOSED CONDITIONS OF CERTIFICATION

VIS-1 Prior to first turbine roll, the project owner shall treat project structures, buildings, and soundwall in appropriate colors or hues that minimize visual intrusion and contrast by blending with the surrounding landscape, and shall treat those items in a non-reflective, appropriately textured finish. A specific treatment plan shall be developed for CEC approval to ensure that the proposed colors do not unduly contrast with the surrounding landscape colors. The plan shall be submitted sufficiently early to ensure that any precolored buildings, structures, and linear facilities will have colors approved and included in bid specifications for such buildings or structures.

Protocol: The project owner shall submit a treatment plan for the project to the California Energy Commission Compliance Project Manager (CPM) for review and approval. The treatment plan shall include:

- specification, and 11" x 17" color simulations, of the treatment proposed for use on project structures, including structures treated during manufacture;
- a list of each major project structure, building, and tank, specifying the color(s) proposed for each item;
- documentation that a non-reflective finish will be used on all project elements visible to the public;
- a detailed schedule for completion of the treatment; and,
- a procedure to ensure proper treatment maintenance for the life of the project.

If the CPM notifies the project owner that revisions of the plan are needed before the CPM will approve the plan, the project owner shall submit a revised plan to the CPM.

After approval of the plan by the CPM, the project owner shall implement the plan according to the schedule and shall ensure that the treatment is properly maintained for the life of the project.

For any structures that are treated during manufacture, the project owner shall not specify the treatment of such structures to the vendors until the project owner receives notification of approval of the treatment plan by the CPM.

The project owner shall not perform the final treatment on any structures until the project owner receives notification of approval of the treatment plan from the CPM.

The project owner shall notify the CPM within one week after all precolored structures have been erected and all structures to be treated in the field have been treated and the structures are ready for inspection.

Verification: At least 60 (sixty) days prior to ordering the first structures that are color treated during manufacture, the project owner shall submit its proposed plan to the CPM for review and approval.

If the CPM notifies the project owner that any revisions of the plan are needed before the CPM will approve the plan, within 30 days of receiving that notification, the project owner shall submit to the CPM a revised plan.

Not less than thirty (30) days prior to the start of commercial operation, the project owner shall notify the CPM that all structures treated during manufacture and all structures treated in the field are ready for inspection.

The project owner shall provide a status report regarding treatment maintenance in the Annual Compliance Report.

VIS-2 The project owner shall provide landscaping that is effective in screening a majority of project components from views from Morro Strand State Beach (KOP 5) and the Morro Dunes Trailer Park and Resort Campground (KOP 6). Trees and other vegetation must be strategically placed and of sufficient density to screen the sound wall and most lower structural forms (not the upper portions of the stacks or the upper piping). Trees must be planted sufficiently close to the southern boundary of the trailer park to effectively screen the power plant from views within the trailer park. Vegetation must reach maturity and full screening potential within five (5) years of completion of construction of the new power plant.

Protocol: The project owner shall submit a landscaping plan to the CPM for review and approval. The Plan shall include photosimulations of the landscaping at maturity as viewed from KOPs 5 and 6. The submittal shall also include evidence that the plan is satisfactory to the City of Morro Bay.

If the CPM notifies the project owner that revisions of the plan are needed before the CPM will approve the submittal, the project owner shall submit to the CPM a revised plan.

The project owner shall not implement the plan until the project owner receives approval of the submittal from the CPM.

Verification: Prior to first turbine roll and at least 60 (sixty) days prior to installing the landscaping, the project owner shall submit the plan to the CPM for review and approval.

If the CPM notifies the project owner that revisions of the submittal are needed before the CPM will approve the submittal, within 30 days of receiving that notification, the project owner shall prepare and submit to the CPM a revised submittal.

The project owner shall notify the CPM within 7 (seven) days after completing installation of the landscaping, that the landscaping is ready for inspection.

VIS-3 Prior to first turbine roll, the project owner shall design and install all lighting such that light bulbs and reflectors are not visible from public viewing areas and illumination of the vicinity and the nighttime sky is minimized.

Protocol: The project owner shall develop and submit a lighting plan for the project to the CPM for review and approval. The lighting plan shall require that:

- Lighting is designed so that exterior light fixtures are hooded, with lights directed downward or toward the area to be illuminated and so that backscatter to the nighttime sky is minimized. The design of this outdoor lighting shall be such that the luminescence or light source is shielded to prevent light trespass outside the project boundary;
- High illumination areas not occupied on a continuous basis such as maintenance platforms or the main entrance are provided with switches or motion detectors to light the area only when occupied;
- A lighting complaint resolution form (following the general format of that in Attachment 1) will be used by plant operations, to record all lighting complaints received and document the resolution of those complaints. All records of lighting complaints shall be kept in the on-site compliance file.

If the CPM notifies the project owner that revisions of the plan are needed before the CPM will approve the plan, the project owner shall prepare and submit to the CPM a revised plan.

Lighting shall not be installed before the plan is approved. The project owner shall notify the CPM when the lighting has been installed and is ready for inspection.

Verification: At least 90 (ninety) days before ordering the exterior lighting, the project owner shall provide the lighting plan to the CPM for review and approval.

If the CPM notifies the project owner that any revisions of the plan are needed before the CPM will approve the plan, within 30 days of receiving that notification the project owner shall submit to the CPM a revised plan.

The project owner shall notify the CPM within seven days of completing exterior lighting installation that the lighting is ready for inspection.

REFERENCES

Barta (John Barta) 2001a. Transmittal from J. Barta to CEC/Lewis RE Potential Lighthouse on Duke site, dated April 5, 2001. Submitted to the California Energy Commission on April 10, 2001.

CAPE (Coastal Alliance on Plant Expansion/Groot) 2001a. Transmittal from CAPE/Groot to CEC/Lewis RE Data Requests (Set 1) of the Intervenor (to Applicant), dated March 8, 2001. Submitted to the California Energy Commission on March 12, 2001.

DUKE (Duke Energy Morro Bay LLC) 2000a. Application for Certification, Volumes 1a-1b, II-IV, Morro Bay Power Plant Project (00-AFC-12). Submitted to the California Energy Commission on October 23, 2000.

DUKE (Duke Energy Morro Bay LLC/Luckhardt) 2001a. Letter from Downey Brand Seymour & Rohwer/Luckhardt to CEC/Moore and Keese RE Objections to the Staff's Data Requests 128-161, 164-176, dated and submitted to the California Energy Commission on February 20.

DUKE (Duke Energy Morro Bay LLC/Luckhardt) 20001b. Letter from Downey Brand Seymour & Rohwer/Luckhardt to CEC/Lewis RE Objections to the Staff's Visual Data Requests, dated and submitted to the California Energy Commission on March 9, 2001.

DUKE (Duke Energy Morro Bay LLC) 2001c. Responses to CEC 2/9/01 Visual Data Requests, dated April 3, 2001. Submitted to California Energy Commission on April 12, 2001.

DUKE (Duke Energy Morro Bay LLC) 2001d. Responses to CAPE (Coastal Alliance for Plant Expansion) 3/9/01 Data Requests (First set of responses to CAPE data request Set 1), dated and submitted to California Energy Commission on April 11, 2001.

DUKE (Duke Energy Morro Bay LLC) 2001e. Responses to CEC 4/2/01 Data Requests (First set of responses to CEC data request Set 2 and continuation of responses to Set 1), dated April 24, 2001. Submitted to California Energy Commission on April 26, 2001.

Smardon, Richard C., James E. Palmer, and John P. Felleman. 1986. *Foundations for Visual Project Analysis.* John Wiley & Sons. New York.

U.S. Department of Agriculture, Forest Service. 1995. *Landscape Aesthetics, A Handbook for Scenery Management.* Agriculture Handbook Number 701. USDA, Forest Service.

U.S. Department of Interior (USDI), Bureau of Land Management (BLM). 1986a. *Visual Resource Inventory Manual*. USDI, BLM.

USDI, BLM. 1986b. *Visual Contrast Rating Manual*. USDI, BLM.

USDI, BLM. 1984. *Visual Resource Management Manual*. USDI, BLM.

ATTACHMENT 1

LIGHTING COMPLAINT RESOLUTION FORM

MORRO BAY POWER PLANT PROJECT Morro Bay, California
Complainant's name and address: Phone number:
Date complaint received: Time complaint received:
Nature of lighting complaint:
Definition of problem after investigation by plant personnel: Date complainant first contacted:
Description of corrective measures taken: Complainant's signature: _____ Date:
Approximate installed cost of corrective measures: $ Date installation completed: Date first letter sent to complainant: _____(copy attached) Date final letter sent to complainant: _____(copy attached)
This information is certified to be correct: Plant Manager's Signature:

(Attach additional pages and supporting documentation, as required.)

VISUAL RESOURCES APPENDIX A

Visual Analysis Data Summary

VISUAL RESOURCES APPENDIX B

Visual Resources Figures 1 through 15

VISUAL RESOURCES Figure 1

Comparison of Building Size

Source: Duke 2000a; AFC Figure 2-7

CEC Preparation Instructions

1. Keep same title.
2. Other changes as you deem appropriate.

VISUAL RESOURCES Figure 2
Major Equipment Sizes

Source: Duke 2000a; AFC Figure 6.13-8

CEC Preparation Instructions

1. Keep same title
2. Other changes as you deem appropriate

VISUAL RESOURCES Figure 3

Water Intake Structure West Elevation

Source: Duke 2001e; Data Response Figure 141.1

CEC Preparation Instructions

1. New Title as shown above.
2. Other changes as you deem appropriate

VISUAL RESOURCES Figure 4
Water Intake Structure North Elevation

Source: Duke 2001e; Data Response 141.2

CEC Preparation Instructions

1. New title as shown above.
2. Other changes as you deem appropriate.

VISUAL RESOURCES Figure 5
Landscape Units

Source: Duke 2000a; AFC Figure 6.13-2

CEC Preparation Instructions

1. New title as shown above.
2. Other changes

VISUAL RESOURCES Figure 6
Existing Stack Visibility

Source: Duke 2000a; AFC Figure 6.13-4

CEC Preparation Instructions

1. New Title as shown above.

2. Other changes as you deem appropriate.

VISUAL RESOURCES Figure 7
Key Observation Point Locations

Source: Duke 2000a; AFC Figure 6.13-5

CEC Preparation Instructions

1. Keep same title.
2. If possible, highlight KOPs 5, 6, 8, 14, 15, 19, and 20.
3. Other changes as you deem appropriate.

VISUAL RESOURCES Figure 8A
KOP 5 Existing Conditions

Source: Duke 2001c; Data Response 3/5/01; KOP 5 Existing Conditions

CEC Preparation Instructions

1. Title as shown above
2. Delete Description
3. Add the following caption: The existing view to the southeast from Morro Strand State Beach, directly across from the intersection with Atascadero Road.
4. Other changes as you deem appropriate

VISUAL RESOURCES Figure 8B
KOP 5 Future Conditions

Source: Duke 2001c; Data Response 158.1; Figure 158.1 - KOP 5 Overhead Takeoff Simulation

CEC Preparation Instructions

1. Title as shown above
2. Delete Summary of Visual Changes information
3. Add the following caption: The view from KOP 5 showing a photosimulation of the Morro Bay Power Plant Project.
4. Other changes as you deem appropriate

VISUAL RESOURCES Figure 8C

KOP 5 Future Conditions with Proposed Landscaping at Five Years of Maturity

Source: Duke 2001c; Data Response 176; Figure 176.1 - KOP 5-5 Years Landscaping Maturity

CEC Preparation Instructions

1. Title as shown above
2. Delete Summary of Visual Changes information
3. Add the following caption: The view from KOP 5 showing a photosimulation of the Morro Bay Power Plant Project with proposed landscaping at five years of maturity.
4. Other changes as you deem appropriate

VISUAL RESOURCES Figure 8D

KOP 5 Future Conditions with Proposed Landscaping at Full Maturity (20 years)

Source: Duke 2001c; Data Response 173; Figure 173.1 - KOP 5 Landscaping at Maturity

CEC Preparation Instructions

1. Title as shown above
2. Delete Summary of Visual Changes information
3. Add the following caption: The view from KOP 5 showing a photosimulation of the Morro Bay Power Plant Project with proposed landscaping at full maturity (20 years).
4. Other changes as you deem appropriate

VISUAL RESOURCES Figure 9A
KOP 6 Existing Conditions

Source: Duke 2001c; Data Response 3/5/01; KOP 6 Existing Conditions

CEC Preparation Instructions

1. Title as shown above
2. Delete Description
3. Add the following caption: The existing view to the southeast from the Morro Dunes Trailer Park Resort Campground.
4. Other changes as you deem appropriate

VISUAL RESOURCES Figure 9B
KOP 6 Future Conditions

Source: Duke 2001c; Data Response 173.1; Figure 173.2 - KOP 6 Landscaping at Maturity

CEC Preparation Instructions

1. Title as shown above

2. Delete Summary of Visual Changes information

3. Add the following caption: The view from KOP 6 showing a photosimulation of the Morro Bay Power Plant Project.

4. Other changes as you deem appropriate.

VISUAL RESOURCES Figure 10A
KOP 8 Existing Conditions

Source: Duke 2001c; Data Response 3/5/01; KOP 8 Existing Conditions

CEC Preparation Instructions

1. Title as shown above.
2. Delete Description
3. Add the following caption: The existing view to the northeast from Coleman Drive on Morro Rock.
4. Other changes as you deem appropriate

VISUAL RESOURCES Figure 10B
KOP 8 Future Conditions

Source: Duke 2001c; Data Response 3/5/01; KOP 8 Future Conditions

CEC Preparation Instructions

1. Title as shown above.
2. Add the following caption: The view from KOP 8 showing a partial photosimulation of the Morro Bay Power Plant Project. The image does not show proposed changes to the water intake building. Nor does it clearly show the transmission lines that descend the coastal hills to the existing switchyard. The simulation also does not show the Harbor Front Tract residential development that would be visible on the hillsides directly behind the switchyard.
3. Other changes as you deem appropriate

VISUAL RESOURCES Figure 11A
KOP 14 Existing Conditions

Source: Duke 2001c; Data Response 3/5/01; KOP 14 Existing Conditions

CEC Preparation Instructions

1. Title as shown above.
2. Delete Description
3. Add the following caption: The existing view to the south-southwest from a vacant lot at the end of Sunset Court in the Sunset Plateau residential area.
4. Other changes as you deem appropriate

VISUAL RESOURCES Figure 11B
KOP 14 Future Conditions

Source: Duke 2001c; Data Response 3/5/01; KOP 14 Future Conditions

CEC Preparation Instructions

1. Title as shown above.
2. Delete Summary of Visual Changes
3. Add the following caption: The view from KOP 14 showing a photosimulation of the Morro Bay Power Plant Project.
4. Other changes as you deem appropriate

VISUAL RESOURCES Figure 12A
KOP 15 Existing Conditions

Source: Duke 2001c; Data Response 3/5/01; KOP 15 Existing Conditions

CEC Preparation Instructions

1. Title as shown above.
2. Delete Description
3. Add the following caption: The existing view to the west from the intersection of Radcliff Street and Berwick Drive in the Harbor Front Tract residential area.
4. Other changes as you deem appropriate

VISUAL RESOURCES Figure 12B
KOP 15 Future Conditions

Source: Duke 2001c; Data Response 3/5/01; KOP 15 Future Conditions

CEC Preparation Instructions

1. Title as shown above.
2. Delete Summary of Visual Changes information
3. Add the following caption: The view from KOP 15 showing a photosimulation of the Morro Bay Power Plant Project.
4. Other changes as you deem appropriate

VISUAL RESOURCES Figure 13A
KOP 19 Existing Conditions

VISUAL RESOURCES Figure 13B
KOP 19 Future Conditions

Source: Duke 2000a; AFC P. 6.13-153; KOP 19 Visual Effect

<u>CEC Preparation Instructions</u>

1. Both images are to appear on the same page as presented in the AFC
2. The overall Title is **VISUAL RESOURCES Figure 13 – KOP 19**
3. Individual Title/Captions remain as shown beneath each image
4. Add the following general caption at the bottom of the page: Figure 13A presents the existing view to the northwest from the steps above the giant chessboard at Centennial Park in the Embarcadero Commercial District. Figure 13B presents a photosimulation from the same location showing the proposed Morro Bay Power Plant Project
5. Other changes as you deem appropriate

VISUAL RESOURCES Figure 14A
KOP 20 Existing Conditions

Source: Duke 2001c; Data Response 3/5/01; KOP 20 Existing Conditions

CEC Preparation Instructions

1. Title as shown above.
2. Delete Description
3. Add the following caption: The existing view to the west-southwest from the Main Street onramp to Highway 1.
4. Other changes as you deem appropriate

VISUAL RESOURCES Figure 14B
KOP 20 Future Conditions

Source: Duke 2001c; Data Response 3/5/01; KOP 20 Future Conditions

CEC Preparation Instructions

1. Title as shown above.
2. Delete Summary of Visual Changes information
3. Add the following caption: The view from KOP 20 showing a photosimulation of the Morro Bay Power Plant Project.
4. Other changes as you deem appropriate

VISUAL RESOURCES Figure 15

Nighttime View from KOP 14 in the Sunset Plateau Neighborhood

Source: Duke 2001e; Data Response #140, Figure 140.2 KOP 14

CEC Preparation Instructions

1. Title as shown above.
2. Delete Summary of Visual Changes information
3. Add the following caption: Existing nighttime view of the proposed site showing ambient night lighting. It should be noted that when the lights are on at Lila Kaiser Park, the area between the existing plant and the motel shown in the right of the photograph would be brightly illuminated.
4. Other changes as you deem appropriate

VISUAL RESOURCES APPENDIX C

Additional Viewpoint Existing Conditions Photographs and Simulations
Figures C-1 through C-13

VISUAL RESOURCES Figure C-1
KOP 1 – Black Mountain; Existing and Future Conditions

Source: DUKE 2000a, AFC Page 6.13-81; KOP 1

CEC Preparation Instructions

1. Title as shown above.
2. Eliminate existing “Summary of Visual Changes” and title block information.
3. Other changes as you deem appropriate

VISUAL RESOURCES Figure C-2

KOP 2 – Morro Strand State Beach Campground Entrance; Existing and Future Conditions

Source: DUKE 2000a, AFC Page 6.13-85; KOP 2

CEC Preparation Instructions

1. Title as shown above.
2. Eliminate existing “Summary of Visual Changes” and title block information.
3. Other changes as you deem appropriate

VISUAL RESOURCES Figure C-3

KOP 3 – Highway 1 at San Jacinto Street; Existing and Future Conditions

Source: DUKE 2000a, AFC Page 6.13-89; KOP 3

CEC Preparation Instructions

1. Title as shown above.
2. Eliminate existing “Summary of Visual Changes” and title block information.
3. Other changes as you deem appropriate

VISUAL RESOURCES Figure C-4
KOP 4 – The Cloisters; Existing and Future Conditions

Source: DUKE 2000a, AFC Page 6.13-93; KOP 4

CEC Preparation Instructions

1. Title as shown above.
2. Eliminate existing “Summary of Visual Changes” and title block information.
3. Other changes as you deem appropriate.

VISUAL RESOURCES Figure C-5

KOP 7 – Morro Creek at Embarcadero Road; Existing and Future Conditions

Source: DUKE 2000a, AFC Page 6.13-105; KOP 7

CEC Preparation Instructions

1. Title as shown above.
2. Eliminate existing “Summary of Visual Changes” and title block information.
3. Other changes as you deem appropriate

VISUAL RESOURCES Figure C-6
KOP 9 – North T Pier; Existing and Future Conditions

Source: DUKE 2000a, AFC Page 6.13-113; KOP 9

CEC Preparation Instructions

1. Title as shown above.
2. Eliminate existing “Summary of Visual Changes” and title block information.
3. Other changes as you deem appropriate

VISUAL RESOURCES Figure C-7
KOP 10 – Scott Street; Existing and Future Conditions

Source: DUKE 2000a, AFC Page 6.13-117; KOP 7

CEC Preparation Instructions

1. Title as shown above.
2. Eliminate existing “Summary of Visual Changes” and title block information.
3. Other changes as you deem appropriate

VISUAL RESOURCES Figure C-8

KOP 11 – Highway 41 at 1-Mile Distance; Existing and Future Conditions

Source: DUKE 2000a, AFC Page 6.13-121; KOP 11

CEC Preparation Instructions

1. Title as shown above.
2. Eliminate existing “Summary of Visual Changes” and title block information.
3. Other changes as you deem appropriate

VISUAL RESOURCES Figure C-9

KOP 12 – Highway 41 at 0.75-Mile Distance; Existing and Future Conditions

Source: DUKE 2000a, AFC Page 6.13-125; KOP 12

CEC Preparation Instructions

1. Title as shown above.
2. Eliminate existing “Summary of Visual Changes” and title block information.
3. Other changes as you deem appropriate

VISUAL RESOURCES Figure C-10

KOP 13 – Morro Del Mar Subdivision; Existing and Future Conditions

Source: DUKE 2000a, AFC Page 6.13-129; KOP 13

CEC Preparation Instructions

1. Title as shown above.
2. Eliminate existing “Summary of Visual Changes” and title block information.
3. Other changes as you deem appropriate

VISUAL RESOURCES Figure C-11

KOP 16 – Morro Bay Boulevard Exit from Highway 1; Existing and Future Conditions

Source: DUKE 2000a, AFC Page 6.13-141; KOP 16

CEC Preparation Instructions

1. as shown above.
2. Eliminate existing “Summary of Visual Changes” and title block information.
3. Other changes as you deem appropriate

VISUAL RESOURCES Figure C-12

KOP 17 – Morro Heights Neighborhood; Existing and Future Conditions

Source: DUKE 2000a, AFC Page 6.13-145; KOP 17

CEC Preparation Instructions

1. Title as shown above.
2. Eliminate existing “Summary of Visual Changes” and title block information.
3. Other changes as you deem appropriate

VISUAL RESOURCES Figure C-13
KOP 18 – Tidelands Park; Existing and Future Conditions

Source: DUKE 2000a, AFC Page 6.13-149; KOP 18

CEC Preparation Instructions

1. Title as shown above.
2. Eliminate existing “Summary of Visual Changes” and title block information.
3. Other changes as you deem appropriate

VISUAL RESOURCES APPENDIX D

Plume Roses

Source: DUKE 2000c, 14 pages of plume roses.

WASTE MANAGEMENT

Alvin Greenberg, Ph.D.

INTRODUCTION

This analysis presents an assessment of issues associated with managing wastes generated from constructing and operating the proposed Morro Bay Power Plant Project (MBPP Project, 00-AFC-12). It evaluates the proposed waste management plans and mitigation measures designed to reduce the risks and environmental impacts associated with handling, storing, and disposing of project-related hazardous and nonhazardous wastes. The technical scope of this analysis encompasses wastes generated during facility construction (including demolition of existing structures) and operation, except wastewater discharged pursuant to National Pollutant Discharge Elimination System (NPDES) permits. Wastewater is discussed in the **Soil and Water Resources** section of this document.

Energy Commission staff's objectives in its waste management analysis are to ensure that:

- The management of the wastes will be in compliance with all applicable laws, ordinances, regulations, and standards (LORS). Compliance with LORS ensures that wastes generated during constructing and operating the proposed project will be managed in an environmentally safe manner; and
- Disposal of project wastes will not result in significant adverse impacts to existing waste disposal facilities.

LAWS, ORDINANCES, REGULATIONS AND STANDARDS

FEDERAL

RESOURCE CONSERVATION AND RECOVERY ACT (42 U.S.C. § 6922)

RCRA establishes requirements for the management of hazardous wastes from the time of generation to the point of ultimate treatment or disposal. Section 6922 requires generators of hazardous waste to comply with requirements regarding:

- Record keeping practices which identify quantities of hazardous wastes generated and their disposition,
- Labeling practices and use of appropriate containers,
- Use of a manifest system for transportation, and
- Submission of periodic reports to the EPA or authorized state.

TITLE 40, CODE OF FEDERAL REGULATIONS, PART 260

These sections contain regulations promulgated by the EPA to implement the requirements of RCRA as described above. Characteristics of hazardous waste are

described in terms of ignitability, corrosivity, reactivity, and toxicity, and specific types of wastes are listed.

STATE

CALIFORNIA HEALTH AND SAFETY CODE §25100 ET SEQ. (HAZARDOUS WASTE CONTROL ACT OF 1972, AS AMENDED).

This act creates the framework under which hazardous wastes must be managed in California. It mandates the State Department of Health Services (now the Department of Toxic Substances Control (DTSC) under the California Environmental Protection Agency, or Cal EPA) to develop and publish a list of hazardous and extremely hazardous wastes, and to develop and adopt criteria and guidelines for the identification of such wastes. It also requires hazardous waste generators to file notification statements with Cal EPA and creates a manifest system to be used when transporting such wastes.

TITLE 14, CALIFORNIA CODE OF REGULATIONS, §17200 ET SEQ. (MINIMUM STANDARDS FOR SOLID WASTE HANDLING AND DISPOSAL)

These regulations set forth minimum standards for solid waste handling and disposal, guidelines to ensure conformance of solid waste facilities with county solid waste management plans, as well as enforcement and administration provisions.

TITLE 22, CALIFORNIA CODE OF REGULATIONS, §66262.10 ET SEQ. (GENERATOR STANDARDS)

These sections establish requirements for generators of hazardous waste. Under these sections, waste generators must determine if their wastes are hazardous according to either specified characteristics or lists of wastes. As in the federal program, hazardous waste generators must obtain EPA identification numbers, prepare manifests before transporting the waste off-site, and use only permitted treatment, storage, and disposal facilities. Additionally, hazardous waste must only be handled by registered hazardous waste transporters. Generator requirements for record keeping, reporting, packaging, and labeling are also established.

LOCAL

City of Morro Bay Zoning Ordinance §17.52.090 requires compliance with standards on the discharge of harmful liquid and solid waste. This ordinance is enforced by the Central Coast Regional Water Quality Control Board (CCRWQCB). Compliance with a NPDES permit is adequate to meet these requirements.

SETTING

PROJECT AND SITE DESCRIPTION

On October 23, 2000 Duke Energy Morro Bay LLC filed an Application for Certification (00-AFC-12) seeking approval from the California Energy Commission (Energy Commission) to construct and operate the proposed 1,200-megawatt (MW) Morro Bay Power Plant Project (MBPP Project). The "modernization" Project is proposed to be located at the existing 1,030 MW Morro Bay Power Plant site that is owned and operated by Duke Energy. This site is located within the City of Morro Bay, San Luis Obispo County, near Morro Bay Harbor, bordered on the west by Embarcadero Road and on the east by Highway 1.

The new units will replace four currently operating generation units with two state-of-the-art 600 MW combined cycle units. Each new unit will be capable of producing 600 MW, so that upon completion, the Plant will be capable of producing a total of 1,200 MW. Each new unit will consist of two gas-fired turbines and one steam turbine driven by the heat produced by the other two turbines. Each new unit will have two, 145 foot tall stacks compared with the existing plant's three 450 foot tall stacks.

Natural gas will be delivered from Pacific Gas and Electric Company's Kettleman Compressor Station through PG&E pipeline 306. Natural gas originates from the south with El Paso Natural Gas in Arizona and from the north with PG&E/Northwest in Oregon.

The Project will include demolition of the on site fuel oil tank farm, all existing power plant equipment (boiler – steam turbine complex), and removal of three 450 feet tall exhaust stacks (Duke 2000a). Stage one consists of the demolition of the tank farm in three months and will be completed in 2002. Stage two includes the demolition of the three 450 foot stacks and will begin after commercial operation of the new units commences. This stage will be completed in 2004. Stage three involves the dismantling of the existing generation units by the end of 2007.

Duke Energy purchased the MBPP facility from Pacific Gas and Electric (PG&E) but PG&E retained responsibility for cleaning up onsite contamination created prior to the sale. PG&E commissioned a Phase I Environmental Site Assessment (ESA) at MBPP in April 1997 (PG&E 1997a). The purpose of the ESA was to determine the potential for the presence or likely presence of any hazardous substances or petroleum products under conditions that may indicate a release or threat of a release from present or past activities. The Phase I ESA identified a number of environmental conditions at the site (summarized in AFC Table 6.14-1) including:

- Total petroleum hydrocarbons (TPH), rust-inhibiting oil, and paint chips in soils near and beneath the fuel oil storage tanks;

- TPH, volatile organic compounds (VOCs), and semi-volatile organic compounds (SVOCs) in soils near tank 1 and the former oil transfer pond;

- Asbestos containing materials (ACM) at the fuel oil tank farm;

- No. 6 fuel and displacement oils in the tank farm pipelines;

- Displacement oil in the upper impounding basin area; and

- TPH and lead in soils around the Rock Blotter Area (transformer banks 1-4 north of the power building)

The Phase I ESA provided the basis for additional sampling and analysis of soil and groundwater performed as part of a Phase II ESA to further define the extent of existing contamination (PG&E 1997b, c, d). Analytical results of the Phase II investigation helped identify remediation issues for nine identified localized areas at the MBPP (summarized in AFC Table 6.14-2). These areas comprise ~1.35 acres out of the ~107-acre site (~1% of the area). The contaminants identified include TPH at levels greater than 150 ppm in soil and 100 ppb in groundwater. PG&E has retained remediation responsibility for all nine areas. No schedule for remediation has been prepared other than to state that remediation will be completed as per the terms and conditions of the Purchase and Sale Agreement (AFC Table 6.14-2).

Staff has reviewed the Phase I and II ESAs and has concerns about the lack of remedial investigations conducted beneath existing structures, which are to be demolished. Angle borings beneath these structures were not obtained and thus investigations will not occur until the structures are removed. Staff has proposed a condition of certification (WASTE-3) which would require Duke Energy to prepare a Remedial Investigation Workplan (RI Workplan) prior to demolition. This plan would include a detailed site characterization plan with soil and groundwater sampling and analysis to determine the extent and nature of contamination existing beneath these structures. The RI Workplan would be provided to the San Luis Obispo County Environmental Health Department, the California Department of Toxic Substances Control, the CCRWQCB, and the CEC CPM for review and approval. If contaminated soil or groundwater is found to exist, the project owner would contact representatives of the San Luis Obispo County Environmental Health Department, the California Department of Toxic Substances Control, and the CCRWQCB for further guidance and possible oversight.

No request for designation of an administering agency to oversee site investigation and remedial action has been made pursuant to California Health and Safety Code section 25260 et seq., by PG&E or Duke Energy. Therefore, there is no lead agency and DTSC and the CCRWQCB have separate and equal jurisdiction on this site.

DTSC has reviewed MBPP's plans for hazardous waste handling and site remediation and has informed Commission staff that it has two concerns or comments (DTSC 2001). DTSC requests that the project application identify the mechanism to initiate remedial investigations and to identify the appropriate

oversight agency. DTSC further requests that if soil contamination is suspected during construction, appropriate Health and Safety procedures should be implemented. The concerns raised by DTSC will be addressed by staff's proposed conditions of certification WASTE-3, WASTE-4, and WASTE-5.

The Central Coast Regional Water Quality Control Board (CCRWQCB 2001a and b) has reviewed the Phase I and II ESAs and has also issued comments. The CCRWQCB shares staff's concern about the potential for hazardous wastes to be present in the soil and groundwater under the footprints of the structures to be demolished, particularly the rock blotter area and under the tanks. Furthermore, the CCRWQCB expressed a desire that Duke Energy allow sufficient time between demolition of these structure and commencement of construction of the proposed facility for remedial investigations and cleanup to be completed. Both these concerns are addressed by staff's proposed condition of certification WASTE-3.

IMPACTS

PROJECT SPECIFIC IMPACTS

CONSTRUCTION AND DEMOLITION

Demolition, site preparation, and construction of the generating plant and associated facilities will generate both nonhazardous and hazardous wastes. Individual contractors are considered to be the generators of construction wastes, and as part of its contract specifications for construction contractors, the MBPP will require that materials be handled and disposed in accordance with applicable LORS (Duke 2000a, AFC p. 6.14-20). The most likely disposal site for nonhazardous waste would be the Cold Canyon Landfill.

Nonhazardous waste streams from construction include paper, wood, glass, scrap metal, and plastics, from packing materials, waste lumber, insulation, and nonhazardous chemical containers (AFC Table 6.14-5). Duke Energy estimates that about 40 cubic yards of these types of wastes will be generated on a weekly basis, or a total of about 4000 cubic yards during the 21-month construction period (Duke Energy 2000a, AFC Table 6.14-5).

Hazardous wastes typically generated during construction include waste oil and grease, paint, used batteries, spent solvent, welding materials, and cleanup materials from spills of hazardous substances. Table 6.14-5 (Duke Energy 2000a) lists types, estimated amounts, and management methods of hazardous wastes. Duke Energy estimates that a total of about 1 cubic yard of hazardous wastes will be generated per week of construction activities. Additionally, about 165 gallons of solvents, used oil, paints, and oily rags will be generated. Duke Energy estimated that 300,000 – 700,000 gallons of HRSG cleaning waste (some hazardous and some nonhazardous) will also be generated during construction.

In addition to the construction hazardous wastes noted above, there will be additional wastes associated with the demolition of three 450 foot tall exhaust

stacks used for units one through four and the existing buildings. For example, asbestos may be found in the high temperature piping thermal insulation, some plant equipment is coated with lead based paint, mercury may be used in small quantities in electrical switches, and older capacitors or transformers may contain insulating oil with polychlorinated biphenyls. Material from demolition of the exhaust stacks may include both hazardous and nonhazardous wastes, depending on analytical results. Portions classified as hazardous would be transported offsite to a Class I (hazardous) disposal facility. Duke Energy estimates that about 32,000 cubic yards (64,000 tons) of demolition debris from the stacks, concrete, and slabs could be generated over the course of demolition (Duke 2000a, Table 6.14-5). On-site reuse of much of these demolition wastes, such as the use of ground-up concrete for fill material, is expected to greatly reduce the need for off-site disposal. Other wastes from these demolition activities include 9600 tons of ACM, 8024 tons of power generators, 40,064 tons of steel, and 9100 tons of flooring, valves, and insulation.

Further wastes will be generated by the demolition of the fuel oil tanks. Approximately 2000 tons of displacement oil and oily water wastes will be generated along with 600 tons of steel, 90 tons of ACM, and 1800 tons of fuel oil and oily sludge wastes.

OPERATION

The proposed facility will generate both nonhazardous and hazardous wastes under normal operating conditions. However, according to Duke Energy (Duke 2000a, Table 6.14-6), shutting down the existing power plant and operating the proposed MBPP will result in a net decrease of total hazardous and nonhazardous wastes generated.

Nonhazardous wastes generated during plant operation are expected to be similar to those generated by the present facility and include trash, office wastes, empty containers, broken or used parts, used packing material, and used filters. The quantities of nonhazardous wastes generated from gas-fired facilities are typically minor and operation of the new units is expected to generate the same amount as currently generated, less than 0.43 tons per day (Duke 2000, Table 6.14-3). Nonhazardous solid waste at the existing facility is routinely segregated according to recyclable content to minimize the quantity disposed offsite (Duke 2000a, AFC p. 6.14-10). This practice will continue for operation of the proposed MBPP.

Hazardous wastes likely to be generated during routine project operation include oily water, CTG washwater, heat recovery steam generator (HRSG) washwater, spent selective catalytic reduction (SCR) catalysts, and minimal amounts of used cleaning solvents. About 25 tons per year (tpy) of oily water, 85 tpy of CTG washwater, 420 tpy of HRSG washwater, and 100 tpy of SCR catalyst (containing heavy metals such as vanadium) are expected to be generated on an annual basis from the new combined cycle units (Duke 2000a, Table 6.14-6). About 4228 tons of hazardous solid and liquid wastes are generated by the present facility each year. The new combined-cycle units will generate approximately 630 tons each year.

Solid wastes will be disposed of at either Class I, II, or III landfills (depending on the waste type) while liquid wastes will be either discharged to municipal sewage treatment plants, transported to hazardous waste treatment or disposal facilities, or discharged to the ocean after treatment by an oil/water separator (if nonhazardous).

IMPACT ON EXISTING WASTE DISPOSAL FACILITIES

AFC Table 6.14-3 lists landfills in San Luis Obispo County which accept nonhazardous wastes. Solid waste currently generated by the present power plant at ~0.45 tons per day (tpd) is taken to the Cold Canyon Landfill (Duke 2000a, AFC p. 6.14-13). The Cold Canyon Landfill has a permitted disposal capacity of 750 tpd and is expected to remain operational until 2020. Other landfills in the area have additional capacity and include Chicago Grade Landfill (500 tpd, 2020) and City of Paso Robles Landfill (250 tpd, 2034). Project nonhazardous waste generation will be less than 3 tpd during the 21-month construction period and ~0.43 tpd during operation. Thus, waste generation rates are only a small portion of daily permitted capacity for any one landfill. Even discounting the effects of recycling on the total amount of non-hazardous wastes destined for landfilling, the amounts of waste generated during project construction and operation are insignificant relative to existing disposal capacity.

Three Class I landfills in California, at Kettleman Hills in King's County, Buttonwillow in Ken County, and Westmoreland in Imperial County, are permitted to accept hazardous waste. In total, there is in excess of 22 million cubic yards of remaining hazardous waste disposal capacity at these landfills, with remaining operating lifetimes up to the year 2050. The amount of hazardous waste transported to these landfills has decreased in recent years due to source reduction efforts by generators, and the transport of waste out of state that is hazardous under California law, but not federal law.

Much of the hazardous waste generated during facility construction and operation will be recycled, such as used oil and spent catalysts. Even without recycling, the generation of hazardous waste from MBPP would be a very small fraction (less than one percent) of existing capacity and not significantly impact the capacity or remaining life of any of the state's Class I landfills.

In addition to Class I landfills, asbestos containing materials (ACM) can be transported to the Forward Landfill north of Mateca, Ca. in San Joaquin County. This Class II landfill has a remaining capacity of 17 million cubic yards and is expected to remain open through 2050. Furthermore, Duke Energy identified three soil treatment and recycling providers in the state alone with three waste oil hauler and recycling providers, four hazardous waste transporters, and eight other treatment, storage, or disposal facilities.

CUMULATIVE IMPACTS

Additional waste management impacts which could contribute to those from construction and operation of the MBPP project include those associated with the demolition of the existing fuel oil storage tanks with related environmental

remediation, and installation of selective catalytic reduction (SCR) pollution control to the new units.

Annual generation of wastes from operation of the present power plant are described in Table 6.14-6 (Duke 2000a). About 4228 tons of hazardous solid and liquid wastes are generated each year. The new combined-cycle units will generate approximately 630 tons each year. Nonhazardous solid wastes total about 156 tons annually from the existing units and the new units are expected to generate a similar amount.

Demolition of fuel oil storage tanks, buildings, stacks, etc. is a separate phase and wastes generated by demolition are significant, including more than 138,000 tons of hazardous and nonhazardous wastes. Much of this waste (~83%), however, will be recycled or used on-site. Once the tanks are removed, soil or groundwater contamination may be present, and remediation may be required. As noted earlier, PG&E is responsible for remediating existing contamination at the MBPP site, however, there is currently no designated “lead” regulatory agency. Until the tanks are removed, the extent of potential contamination is unknown, but is expected to be localized.

Installation of SCR pollution control will not result in any significant waste related impacts. Periodically, the catalysts must be replaced to maintain operating efficiency, and are typically recycled. In the event that recycling is not pursued, the catalyst would require disposal in a class I (hazardous) landfill. The amount of catalyst which must be recycled or disposed is estimated at 100 tons annually.

The quantities of wastes generated during construction and operation of the MBPP project will not result in any significant waste management related impacts. Similarly, quantities of wastes associated with the activities described above, including continued operation of units six and seven, demolition of existing tanks, and installation of SCR catalyst, will not be significant. Considering the lack of impacts on individual disposal facilities and the availability of additional regional landfills, cumulative impacts will be insignificant for both hazardous and nonhazardous wastes.

FACILITY CLOSURE

During any type of facility closure (see staff’s General Conditions section which discusses planned, unexpected temporary, and unexpected permanent closure), the primary waste management related concern is that project wastes not pose any potentially significant problem to the public, workers, or the environment. Staff believes that conditions of certification in the General Conditions section will adequately address waste management issues related to closure.

In the case of unexpected temporary closure, waste management practices normally required by LORS and already in-place (such as limiting hazardous waste accumulation time to 90 days and requiring proper containment) would be adequate to avoid significant problems. In addition, staff’s General Conditions for Facility

Closure require preparation of an on-site contingency plan which shall provide for removal of hazardous wastes and draining of all chemicals from storage tanks and other equipment for temporary closures exceeding 90 days.

An approved on-site contingency plan is also required to protect public health and safety in the case of unexpected permanent closure. As above, the plan must provide for the removal of hazardous materials and hazardous wastes, draining of all chemicals from storage tanks and other equipment, and the safe shutdown of all equipment.

For planned permanent closure, MBPP will develop a facility closure plan at least twelve months prior to commencement of closure and is committed to complying with LORS which are applicable at the time of closure.

COMPLIANCE WITH APPLICABLE LAWS, ORDINANCES, REGULATIONS, AND STANDARDS (LORS)

Energy Commission staff concludes that Duke Energy will be able to comply with all applicable LORS regulating the management of hazardous and non-hazardous wastes during MBPP construction and operation. The applicant is required to dispose of hazardous and non-hazardous wastes at facilities approved by the CCRWQCB or the CAL EPA Department of Toxic Substances Control. Because hazardous wastes will be produced during project construction and operation, Duke Energy should utilize its existing EPA identification number as a hazardous waste generator. Accordingly, Duke Energy will be required to properly store, package and label waste, use only approved transporters, prepare hazardous waste manifests, and keep detailed records. Pursuant to California Code of Regulations, Title 22, section 67100.1 et seq., a hazardous waste Source Reduction and Evaluation Review and Plan has been prepared by Duke Energy which meets the requirements of SB-14 (Duke 2000a, AFC p. 6.14-10).

MITIGATION

Based on the analysis of impacts and the design and operational features that have been incorporated into the project, Duke Energy has not proposed mitigation measures beyond those in place at MBPP (Duke 2000a, AFC p. 6.14-26). However, as part of waste management operations associated with the ongoing operation of the existing power plant, measures are routinely employed to minimize the amounts of wastes generated. The measures are incorporated in the Source Reduction Evaluation Review and Plan, and include recycling, operational improvements, changes in production processes, and administrative controls (Duke 2000a, AFC p. 6.14-10).

As an additional measure to help ensure proper waste management practices, staff proposes that Duke Energy develop and submit a waste management plan which will include details on the handling, packaging, labeling, storage, treatment, and disposal of wastes (proposed Condition of Certification WASTE-2).

In order to address concerns about the lack of remedial investigations conducted beneath existing structures which are to be demolished, staff has proposed a condition of certification (WASTE-3) which would require Duke Energy to prepare a Remedial Investigation Workplan prior to demolition . This plan would be provided to the San Luis Obispo County Environmental Health Department, the California Department of Toxic Substances Control, the Central Coast Regional Water Quality Control, and the CEC CPM for review and approval. If contaminated soil or groundwater is found to exist, the project owner would contact representatives of those agencies for further guidance and possible oversight.

Staff has examined the waste management related measures proposed by the Applicant and concluded that, together with applicable LORS and the additional measure proposed by staff, they will adequately assure that no significant environmental impacts will result from the management and disposal of project-related waste.

CONCLUSIONS AND RECOMMENDATIONS

Management of the wastes generated during construction and operation of MBPP will not result in any significant adverse impacts if Duke Energy implements the waste management measures proposed in the Application for Certification (00-AFC-12) and the proposed conditions of certification.

CONDITIONS OF CERTIFICATION

WASTE-1 Upon becoming aware of any impending waste management-related enforcement action, the project owner shall notify the CPM of any such action taken or proposed to be taken against it, or against any waste hauler or disposal facility or treatment operator that the owner contracts with.

Verification: The project owner shall notify the CPM in writing within 10 days of becoming aware of an impending enforcement action.

WASTE-2 Prior to the start of both construction and operation, the project owner shall prepare and submit to the CEC CPM, for review and comment, a waste management plan for all wastes generated during construction and operation of the facility, respectively. The plans shall contain, at a minimum, the following:

- A description of all expected waste streams, including projections of frequency and hazard classifications; and

- Methods of managing each waste, including treatment methods and companies contracted with for treatment services, waste testing methods to assure correct classification, methods of transportation, disposal requirements and sites, and recycling and waste minimization/reduction plans.

Verification: No less than 60 days prior to the start of construction, the project owner shall submit the construction waste management plan to the CPM for review. The operation waste management plan shall be submitted no less than 60 days prior to the start of project operation. The project owner shall submit any required revisions within 30 days of notification by the CPM (or mutually agreed upon date). In the Annual Compliance Reports, the project owner shall document the actual waste management methods used during the year compared to planned management methods.

WASTE-3 Before demolition of the fuel oil tanks, the existing generator buildings, the existing stacks, and any other building, the project owner shall prepare a Remedial Investigation Workplan (RI Workplan). This plan shall include a detailed site characterization plan with soil and groundwater sampling and analysis to determine the extent and nature of contamination existing beneath these structures. The RI Workplan shall be provided to the San Luis Obispo County Environmental Health Department, the California Department of Toxic Substances Control, the Central Coast Regional Water Quality Control, and the CEC CPM for review and approval. If contaminated soil or groundwater is found to exist, the project owner shall contact representatives of the San Luis Obispo County Environmental Health Department, the California Department of Toxic Substances Control, and the Central Coast Regional Water Quality Control Board for further guidance and possible oversight.

Verification: At least sixty (60) days prior to commencement of tank or structure demolition, the project owner shall provide the RI Workplan to the San Luis Obispo County Environmental Health Department, the California Department of Toxic Substances Control, the Central Coast Regional Water Quality Control, and the CEC CPM for review and approval. Within thirty (30) days of completion of the sampling and analysis and prior to the initiation of any construction activities, the project owner shall provide the results of the sampling and analysis to the San Luis Obispo County Environmental Health Department, the California Department of Toxic Substances Control, and the Central Coast Regional Water Quality Control, and the CPM for review and guidance on possible remediation.

WASTE-4 The project owner shall have an environmental professional available for consultation during soil excavation and grading activities. The environmental professional shall meet the qualifications of such as defined by the American Society for Testing and Materials designation E 1527-97 (or updated) Standard Practice for Phase I Environmental Site Assessments as evidenced by one of the following or similar credentials: (1) Certified Industrial Hygienist with experience in worker exposure monitoring, (2) Qualified Environmental Professional certification, (3) Registered Environmental Assessor II, or (4) Registered Professional Engineer with experience in remedial investigation and feasibility studies.

Verification: At least 30 days prior to the start of construction, the project owner shall submit the qualifications and experience of the environmental professional to the CPM for approval.

WASTE-5 If potentially contaminated soil is unearthed during excavation at either the proposed site or linear facilities as evidenced by discoloration, odor, or other signs, the environmental professional shall inspect the site, determine the need for sampling to confirm the nature and extent of contamination, and file a written report to the project owner and CPM stating the recommended course of action, prior to any further construction activity at that location. If, in the opinion of the environmental professional, significant remediation may be required, the project owner shall contact representatives of the San Luis Obispo County Division of Environmental Health and the Sacramento Regional Office of the California Department of Toxic Substances Control for guidance and possible oversight.

Verification: The project owner shall submit any reports filed by the environmental professional to the CPM within 5 days of their receipt.

REFERENCES

DUKE (Duke Energy Morro Bay LLC) 2000a. Application for Certification, Volumes 1a-1b, II-IV, Morro Bay Power Plant Project (00-AFC-12). Submitted to the California Energy Commission on October 23, 2000.

DUKE (Duke Energy Morro Bay LLC) 2000b. Topographic Maps (USGS 7.5 minute series), Quadrangles: Morro Bay North, Morro Bay South, Atascadero, San Luis Obispo, and Cayucos. Submitted to California Energy Commission on October 25, 2000.

DUKE (Duke Energy Morro Bay LLC) 2000c. Geotechnical Investigative Report, dated August 2000. Submitted to California Energy Commission on October 25, 2000.

DTSC (California Department of Toxic Substances Control) 2001. Letter to CEC/Ringer from DTSC/Jeche, dated April 6, 2001. Submitted to California Energy Commission on April 6, 2001.

PG&E (Pacific Gas and Electric Co.) 1997a. Phase One Environmental Site Assessment, Morro Bay Power Plant, April 1997

PG&E (Pacific Gas and Electric Co.) 1997b. Phase Two Environmental Site Assessment, Vol. I, July 1997

PG&E (Pacific Gas and Electric Co.) 1997c. Phase Two Environmental Site Assessment, Vol. II, July 1997

PG&E (Pacific Gas and Electric Co.) 1997d. Phase Two Environmental Site Assessment, Vol. III, July 1997

CCRWQCB 2001a. Personal communication with David Schwartzbart, Central Coast Regional Water Quality Control Board. April 23.

CCRWQCB 2001b. Lettter to CEC/Kae Lewis from Roger W. Briggs, Executive Officer, CCRWQCB, dated April 27, 2001.

SOIL & WATER RESOURCES

Joe Crea, Dominique Brocard, Jim Henneforth,
Jim Thurber and Mike Krolak

INTRODUCTION

This section of staff's Preliminary Staff Assessment (PSA) analyzes potential effects on soil and water resources from the construction and operation of the Morro Bay Power Plant (MBPP), proposed by Duke Energy Morro Bay LLC. The analysis focuses on the potential for the project to induce erosion and sedimentation, adversely affect surface and groundwater supplies, and degrade ocean, inland surface and groundwater quality. This assessment addresses the project's ability to comply with all applicable federal, state and local laws, ordinances, regulations and standards, identifies mitigation measures and recommends conditions of certification.

The **Waste Management** section addresses issues related to remediation of contaminated soil and water. Biological issues associated with cooling water intake and discharge are addressed in the **Biological Resources** section.

LAWS, ORDINANCES, REGULATIONS, AND STANDARDS (LORS)

FEDERAL

CLEAN WATER ACT

The Clean Water Act (33 USC § 1251), formerly the Federal Water Pollution Control Act of 1972, was enacted with the intent of restoring and maintaining the chemical, physical, and biological integrity of the waters of the United States.

The Clean Water Act requires states to set standards to protect, maintain, and restore water quality through the regulation of point source and certain non-point source discharges to surface water. These discharges are regulated by this act, through requirements set forth in specific or general, and the National Pollutant Discharge Elimination System (NPDES) permits. In California, the NPDES permitting authority is delegated to, and administered by, the nine Regional Water Quality Control Boards (RWQCB). The proposed project will be addressed by the Central Coast Regional Water Quality Control Board (CCRWQCB) through modification of the existing NPDES permit for the MBPP. Stormwater discharges related to earthmoving activities involving five or more acres of earth disturbance also fall under this act, and are addressed through a General NPDES Permit for Stormwater Discharges associated with Construction Activities.

Section 316 (33 USC § 1326) of the Clean Water Act specifically addresses thermal discharges and cooling water intake structures. Subsection (a) provides that " … the owner or operator of any such source … can demonstrate to the satisfaction of … the state that any effluent limitation proposed for the control of the thermal

component of any discharge from such source will require effluent limitations more stringent than necessary to assure the protection and propagation of a balanced, indigenous population of shellfish, fish, and wildlife in and on the body of water into which the discharge is to be made … the state may impose an effluent limitation … that will assure the protection and propagation of a balanced, indigenous population of shellfish, fish, and wildlife in and on that body of water."

Subsection (b) of section 316 requires that " … the location, design, construction, and capacity of cooling water intake structures reflect the best technology available for minimizing adverse environmental impact."

Section 404 of the Clean Water Act regulates the discharge of dredged or fill materials into the waters of the United States, including rivers, streams, and wetlands. The U.S. Army Corps of Engineers administers the Section 404 permit. The proposed bridge construction across Morro Creek will be subject to Section 404 permit requirements. Maintenance dredging associated with the intake and discharge structures may be subject to 404 permit requirements.

Section 401 of the Act requires that the Regional Water Quality Control Board must certify any activity that may result in a discharge into a waterbody. This certification ensures that the proposed activity will not violate state and federal water quality standards.

RIVER AND HARBOR ACT

Section 10 of the River and Harbor Act of 1899 specifies permit requirements for work on structures over, in, and/or under navigable waters of the United States (33 U.S.C. Section 403). The purpose of this law is to preserve the navigability of the waters of the United States by prohibiting the unauthorized obstruction or alteration of any navigable waters. Section 10 is administered by the U.S. Army Corps of Engineers.

STATE

PORTER-COLOGNE WATER QUALITY CONTROL ACT

The Porter-Cologne Water Quality Control Act of 1967, Water Code Section 13000 et seq., requires the State Water Resources Control Board (SWRCB) and the nine RWQCBs to adopt water quality criteria to protect state waters. These criteria include the identification of beneficial uses, narrative and numerical water quality standards and implementation procedures. The criteria for the project area are contained in the *Basin Water Quality Control Plan – Central Coast Region Basin* (RWQCB 1994), the California Ocean Plan (1997), and the Thermal Plan (1975).

The Porter-Cologne Water Quality Control Act also requires the SWRCB and the nine RWQCBs to ensure the protection of water quality through the regulation of waste discharges to land. Such discharges are regulated under Title 23, California Code of Regulations, section 2200 et seq. These regulations require that the RWQCB issue a Waste Discharge Requirement regarding the discharge of waste (soil) into surface waters resulting from land disturbance.

CALIFORNIA WATER CODE

California Water Code § 13550 requires the use of reclaimed water, where available. The use of potable domestic water for nonpotable uses, including, industrial uses, is a waste or an unreasonable use of the water within the meaning of Section 2 of Article X of the California Constitution if recycled water is available.

California Water Code § 13260 requires that, as part of the NPDES permit, any person discharging waste, or proposing to discharge waste, within any region that could affect the quality of the waters of the state, other than into a community sewer system must submit a report of waste discharge to the RWQCB.

CALIFORNIA CONSTITUTION

California Constitution, Article 10, §2. This provision states that the water resources of the state should be put to beneficial use to the fullest extent possible. The waste or unreasonable use or unreasonable method of use of water is prohibited and water conservation is encouraged. The right to water or to the use of the flow of water and riparian rights is to be maintained by reasonable methods of diversion and use.

STATE WATER RESOURCES CONTROL BOARD POLICIES

The SWRCB has also adopted a number of policies that provide guidelines for water quality protection. The Water Quality Control Policy on the Use and Disposal of Inland Waters Used for Power Plant Cooling (adopted by the Board on June 19, 1976 by Resolution 75-58) states that use of fresh inland waters should only be used for power plant cooling if other sources or other methods of cooling would be environmentally undesirable or economically unsound. This SWRCB policy requires that power plant cooling water should, in order of priority, come from wastewater being discharged to the ocean, ocean water, brackish water from natural sources or irrigation return flow, inland wastewaters of low total dissolved solids, and other inland waters. This policy also defines cooling water discharge prohibitions.

The principal policy of the State Board which addresses enclosed bays and estuaries is the “Water Quality Control Policy for the Enclosed Bays and Estuaries of California” (adopted by the Board on May 16, 1974 by Resolution 74-43). This policy contains a number of prohibitions on waste discharges including chemical, biological and petroleum related waste.

STATE WATER RESOURCES CONTROL BOARD PLANS

CALIFORNIA THERMAL PLAN

In 1972, the State Water Resources Control Board adopted the “Water Quality Control Plan for the Control of Temperature in the Coastal and Interstate Waters and Enclosed Bays and Estuaries of California”, more commonly known as the Thermal Plan. The Thermal Plan, which was later amended in 1975, sets limits on the discharge of wastewaters with elevated temperatures into coastal, estuarine and interstate waters in order to meet water quality objectives. The Thermal Plan

provides the authority for the RWQCB to grant exceptions to the specific water quality objectives in accordance with Section 316(a) of the Clean Water Act. Such exemptions also require the approval of the SWRCB.

A major aim of the Thermal Plan is to protect marine resources in the ocean, enclosed bays and estuaries from the adverse impacts of thermal waste. Thermal waste is defined as cooling water and industrial process water used to carry waste heat from such large point sources as power plants. Two categories of discharges exist: "existing" which are discharges in place or under construction prior to the plan's 1971 adoption and "new" which are discharges developed after the plan was adopted. The proposed project is considered an existing discharge under the Thermal Plan by RWQCB staff (Thomas 2001). The project will be discharging to Estero Bay using the existing Morro Bay Plant discharge channel. Under the Thermal Plan, Estero Bay is considered to be coastal waters.

Therefore, the applicable water quality objective in the Thermal Plan is:

- Elevated temperature wastes shall comply with limitations, established on a case-by-case basis, necessary to assure protection of the beneficial uses and areas of special biological significance.

CALIFORNIA OCEAN PLAN

In 1997, the SWRCB (Resolution 97-026) adopted the latest version of the Water Quality Control Plan for Ocean Waters of California (California Ocean Plan). The California Ocean Plan establishes beneficial uses and water quality objectives for the state's ocean waters outside of enclosed bays, estuaries and lagoons. The plan also sets forth effluent limitations, management practices and prohibitions. Every three years the plan is reviewed and, if necessary, updated.

CALIFORNIA COASTAL ACT OF 1976 (PUB. RESOURCES CODE §30000 ET SEQ.)

Chapter 3. Coastal Resources Planning and Management Policies. Article 4. Marine Environment. Section 30231. This section requires that the "…biological productivity and the quality of coastal waters, wetlands, estuaries and lakes shall be maintained by minimizing adverse effects of wastewater discharges and entrainment, controlling runoff, preventing depletion of groundwater…" Refer to the **Land Use** section of the PSA for further detail.

LOCAL

CITY OF MORRO BAY FLOOD DAMAGE PREVENTION ORDINANCE

Chapter 14.72 Flood Damage Prevention – Provisions within this chapter ensure uses within flood prone areas are adequately elevated, protected, or otherwise floodproofed. Flooding may also become man-induced when obstructions create irregular flood patterns. The purpose of the provisions is to protect public health and safety and to reduce public and private losses due to flooding events.

A Development Permit is required prior to any construction within any area of special flood hazard. The areas of special flood hazard are identified in the 1985 Federal Emergency Management Agency (FEMA) Flood Insurance Study and the accompanying Flood Insurance Rate Map. The Development Permit includes, but is not limited to, a verification that all proposed sites are reasonably safe from flooding and will not adversely affect the carrying capacity of a watercourse.

CITY OF MORRO BAY GRADING PERMIT

The City of Morro Bay enforces the California Building Code Chapter 33 for grading and excavation activities within the City limits. The Applicant will be required to obtain a grading permit from the Morro Bay Public Services Department prior to construction activities. Prior to issuance of the grading permit, a geotechnical investigation and a Grading and Drainage plan needs to be submitted for review and approval.

SETTING AND PROJECT DESCRIPTION

REGIONAL ENVIRONMENTAL SETTING

The site is located on a low lying coastal terrace along the Central California coast with the northwestern portion of Morro Bay to the southwest, Estero Bay and Morro Rock to the west, and the Pacific Ocean west of both bays. East of the site is the western coastal edge of the Santa Lucia range, which consists of rolling hills formed by the Franciscan Assemblage geologic regime (Duke 2000a).

Annual average precipitation at the MBPP is approximately 14 inches with about 90 percent of the precipitation occurring between November and April. Cool wet winters and warm dry summers along with marine layers characterize the coastal climate in this region of California. Annual average temperatures range between the mid 40s to the low 70s (°F) (Duke 2000a).

The existing 107-acre site is essentially flat with an elevation ranging from about 15 to 23 feet above mean lower low water (MLLW) level. Morro Creek and recreational land uses are located on the north side of the site. Highway 1 is located to the east of the site, while residential/commercial land uses lie to the south. (Duke 2000a).

SURFACE WATERS

Surface water bodies in the vicinity of the project include Estero Bay, Morro Bay and Morro Creek. Beneficial uses of these water bodies identified by the RWQCB (1994) are identified in **Soil & Water Resources Table 1**.

SOIL & WATER RESOURCES TABLE 1
Surface Water Beneficial Uses

	Estero Bay	Morro Bay	Morro Creek
Water contact recreation	●	●	●
Non-contact water recreation, including aesthetic enjoyment	●	●	●
Industrial water supply	●	●	
Navigation	●	●	
Marine habitat	●	●	
Shell fish harvesting	●	●	
Ocean commercial and sport fishing	●	●	
Preservation of rare and endangered species	●	●	●
Wildlife habitat	●	●	●
Municipal supply			●
Agricultural supply			●
Groundwater recharge			●
Warm fresh water habitat			●
Cold fresh water habitat			●
Migration of aquatic organisms			●
Spawning, reproduction or early development			●
Estuarine habitat			●
Commercial and sport fishing			●

Source: SWRCB Water Quality Control Plan, Central Coast Region, 1994.

ESTERO BAY

Located along California's Central Coast, between Estero Point to the north and Buchon Point to the South, Estero Bay is about 15 miles long and 5.5 miles wide. The majority of the bay is underlain by sandy substrate. The Estero Bay shoreline is rocky at both ends, with a sandy beach occupying the central section (Duke 2000a).

Currents in Estero Bay are influenced by tides and wind and the California Current, which flows south down the coast. During the winter, the California Current is occasionally displaced by the northerly Davidson Current.

The tides in the area are composed of a high high-tide and low high-tide daily (i.e. two tides of unequal amplitude per 24.8-hour period). The tidal range between Mean Lower Low Water (MLLW) and Mean Higher High Water (MHHW) is about 5.3 ft, while the mean amplitude of the smaller tide, between Mean Lower High Water and Mean Higher Low Water, is 2.3 ft. These unequal daily tides are modulated by the monthly variations from neap conditions (small amplitude) to spring conditions (larger amplitudes). During ebb, local currents are usually to the south, while during floods, local currents are typically to the north, but it is thought that an eddy forms north of Morro Rock during these periods, resulting in a southerly current along the beach.

Winds, which are predominantly from the northwest in the area, tend to generate a counterclockwise gyre, with a northerly component along the shore. This component is enhanced by swells, which predominantly originate from the south.

Upwelling of deeper waters, which occurs regularly along the central California coast, also affect currents in Estero Bay. Upwelling events are triggered by sustained winds, and bring to the shore colder, nutrient rich waters.

Surface water temperatures in Estero Bay typically range from 49 to 68°F (Duke 2000a), although higher temperatures can occur in shallow portions of the bay during windless periods.

Water quality information on Estero Bay is available from several sources including the Central Coast RWQCB and the National Oceanic and Atmospheric Agency. Measurements conducted on the cooling water intake water indicates a relatively constant salinity of 33.4 to 33.8 parts per trillion (ppt) and a dissolved oxygen content of 6.6 to 10.8 mg/l (DUKE 2000a).

MORRO BAY

In recognition of its ecological and socio-economic importance, as well as its vulnerability, Morro Bay has been designated a State and National Estuary.

Morro Bay is a shallow tidal embayment formed by the accumulation of northward littoral transport in a sand barrier just south of Morro Rock. A narrow manmade connection with the ocean exists, allowing tidal flow into and out of the bay, as well as flows from the Chorro and Los Osos Creeks that discharge to Morro Bay. The entrance to the bay is protected by two breakwaters and a navigation channel is maintained by the Corps of Engineers. The navigation channel is dredged every 3 to 4 years to a nominal depth of 15 ft below MLLW. In addition, about 5,000 cubic yards of sediments are dredged in front of the Morro Bay Power Plant intake every 5 to 10 years. The navigation maintenance dredging has had considerable effect on water exchanges between Morro Bay and the ocean.

The total surface area of Morro Bay is about 3.3 square miles at high tide, and less than 1 square mile at low tide. The bottom elevation of Morro Bay is about 3.8 ft below Mean Tide Level (MTL), or 1 ft below MLLW. However, at low water the

average water depth is 8.4 ft, reflecting the fact that much of the open water is made of dredged channels.

The fresh water inflows to Morro Bay from Chorro and Los Osos Creeks are subject to considerable seasonal variations, as summarized in **Soil & Water Resources Table 2** (Tetra Tech 1999). For comparison, the proposed cooling water withdrawal for the modernization project is 551cubic feet per second (cfs) for base load and 735 cfs for peak load.

SOIL & WATER RESOURCES TABLE 2
Flows to Morro Bay

	Summer Low flow (cfs)	Medium Flow (cfs)	2-year Flood Flow (cfs)
Chorro Creek	1.4	64	1,146
Los Osos Creek	0.3	3.3	203

Source: Duke 2000a –Appendix 6.5-3, page 6

Tides generate considerable flow in and out of Morro Bay. The volume of water which goes in and out of the bay during each tide cycle, called the tidal prism, is about 8,130 acre-ft, between MHHW and MLLW (Duke 2000a). This tidal prism represents 65 percent of the volume of the bay at MHHW. Therefore, tidal exchange produces considerable flushing of Morro Bay. However, the tidal prism corresponding to the smaller of the two daily tides, as well as the tidal prism during neap tides, is smaller than the 8,130 acre-ft estimate. The average flow through the bay entrance corresponding to this tidal prism is 16,000 cfs and the peak flow is on the order of 25,000 cfs. The contributions of the creek discharge and the plant intake flow must be added or subtracted to this tidal exchange flow to obtain actual flows through the bay entrance. Other than during storms, the creek discharge is small compared to the tidal exchange and the proposed MBPP flow (for peak load) of about 6.3 percent of the average tidal exchange flow during the larger of the two daily tides. For smaller tides, the power plant flow represents a larger percentage of the tidal exchange up to 9%.

Morro Bay is currently stressed by sediment accumulation. The sediment sources to Morro Bay are the creeks flowing into Morro Bay, wind-blown sediments (aeolian transport) and bay current-related deposition (littoral transport). Loss of sediment results from tidal flushing through Morro Bay's entrance and harbor dredging. A study of these factors indicates a net accumulation of about 37,000 cubic yards per year (Haltiner and Thor 1991). The resulting shoaling has occurred primarily at the head of the bay.

Salinity and temperature in Morro Bay vary seasonally and spatially. Because of limited fresh water inflow during summer and fall, high temperatures and hypersaline conditions can be prevalent in parts of the bay estuary. Near the intake, salinity and temperature is reflective of Estero Bay.

Water quality in Morro Bay is considered "impaired" relative to sediments, pathogens and metals under Section 303(d) of the Clean Water Act. Elevated levels of bacteria are commonly detected in Morro Bay, particularly in the southern

half. In recent years, sections of the bay's oyster beds have been closed due to coliform contamination (Duke 2000a). The sources of bacteria are cattle operations, urban runoff from Los Osos and the City of Morro Bay and illegal dumping from boats.

Heavy metals and other toxics are found in Morro Bay sediments. These are thought to originate from non-point sources and industrial activity in the watershed, transported to Morro Bay by Chorro and Los Osos Creeks. Water quality samples from the cooling water intakes do not indicate elevated levels of metals.

MORRO CREEK

Morro Creek is located north of the existing tank farm, traversing the northern portion of the MBPP site and eventually discharging into the ocean, 2000 feet north of Morro Rock. The ephemeral creek, which has a drainage area of 24 square miles, consists of an incised channel within the terrace (USGS 2001). The channel was subsequently filled with fluvial sediments. At the site of the proposed facility, older and younger dune sand, estuarine deposits, and hydraulic fill also blanket the coastal terrace. The Applicant has not provided any further hydrologic/hydraulic data for Morro Creek to perform an evaluation of impacts on this watercourse.

GROUNDWATER

Groundwater occurs at depths ranging from 3 to 15 feet beneath MBPP. The water table elevation varies from 12 feet above mean sea level (MSL) along the eastern facility boundary to elevation 3 feet above MSL at the western edge (Duke 2000a). The Younger and Older dune deposits, estuarine and alluvial units are typically saturated or water bearing. Groundwater occurs in fractures of the Franciscan Formation and dacite but they are generally considered non-water bearing (DWR 1972; Duke 2000a).

Groundwater flow direction is west-southwest across the MBPP facility at a gradient of 0.0045 foot/foot. Groundwater is recharged by surface infiltration of rainfall and predominantly by runoff in Morro Creek.

The Morro Creek watershed from the Pacific Ocean to the confluence of Morro and Little Morro Valleys is termed the Morro Basin. The Morro Basin is a small, coastal alluvial groundwater basin covering 810 acres and not exceeding 80 feet in thickness. The base of the water-bearing alluvium and dune deposits slopes westward from elevation 20 feet above MSL at the eastern edge to 60 feet below MSL at the coast (Cleath and Associates 1994). Cleath and Associates (1994) estimated total groundwater storage to be 3,247 acre-feet and that about 381 acre-feet is available as recoverable storage. Recharge along Morro and Little Morro Creeks is capable of fully replenishing the groundwater basin in years when measured streamflow is 3,000 acre-feet or more. Annual runoff of 1200 acre-feet or less has resulted in water levels measured in City of Morro Bay wells to drop below elevation –20 feet MSL (Cleath and Associates 1994).

According to Bill Boucher, City of Morro Bay Public Services Department, the City of Morro Bay operates a municipal supply well field north of Morro Creek and west of

Highway 1 (2001). Four supply wells (Wells 3, 4, 14 and 15) are located in Lila Kaiser Park approximately 1000 feet northeast of the proposed MBPP facilities. The City relied on these wells for 270 to 672 acre-feet of annual municipal supply from 1980 to 1997. Although the water is hard (mineral rich), its quality meets the State Primary Drinking Water Standards. Pumping during periods of low water table has allowed seawater intrusion to extend inland (DWR 1972; Cleath and Associates 1994). Since September 1997, the City of Morro Bay has had access to the State Water Project and has not relied on groundwater pumping for municipal supply. However, the State Water Contract for up to 1.17 million gallons per day is an interruptible supply. The City has appropriative rights to 581 acre-feet per year of groundwater from the Morro Basin. The Morro Basin groundwater source remains the City's primary supplemental supply in the event the State Water Project deliveries are interrupted. A planned interruption is scheduled for the entire month of November 2001.

GROUNDWATER CONTAMINATION

There are both onsite and offsite concerns regarding groundwater contamination for the proposed MBPP project. At the existing site, small areas of groundwater contamination by total petroleum hydrocarbons (TPH) occur (Fluor Daniel, 1997). These areas are located near the Beach Valve Area, Distilled Water Tanks and the Switchyard. Groundwater testing for volatile organic compounds (VOCs), metals, polynuclear aromatic hydrocarbons (PAHs), and polychlorinated biphenyls (PCBs) revealed these compounds were below detection limits and regulatory levels.

Groundwater quality measured in the shallow aquifer in 1997 (depth 5 to 20 feet below ground surface) is largely unchanged at the site since 1984 -1985 (Duke 2000a). Groundwater samples collected from 1995 to 1998 indicate water quality beneath the site meets drinking water standards except for sodium, chloride, manganese, and occasionally iron.

Offsite concerns are centered on the presence of methyl tertiary-butyl ether (MTBE) in the vicinity the City of Morro Bay's wastewater treatment plant in May-June, 1999. The release, which was detected in all effluent west of the intersection of Highway 41 (Atascadero Road) and Main Street, was traced to petroleum contamination at the Shell service station located at that intersection. The groundwater plume extends 400-feet west of the source located on the east side of Highway 1 (Miller Brooks Environmental 2001a and 2001b). The plume has not yet reached the City's wells (Rohrer, 2001).

The responsible party, City of Morro Bay and the Central Coast Regional Water Quality Control Board (RWQCB) are aggressively pursuing delineation and remediation of the plume which threatens drinking water supplies in the Morro groundwater basin. Current remediation consists of High Vacuum Dual Phase Extraction (in the site vicinity) and continuous groundwater pumping along Highway 1. Work planned for June 2001 includes a 48-hour aquifer test of one or more City wells to provide data for a groundwater flow model. This model will aid in the design of a successful treatment strategy and is intended to help predict any effect from additional pumping in region, such as the wells for the MBPP (Rohrer 2001).

The overall schedule for remediation includes starting an expedited pump and treat system in November 2001 that is intended to contain and remove the MTBE plume.

According to the City of Morro Bay, even though the City wells are not currently contaminated, the City will rely on alternate water supplies during the planned November 2001 interruption of State aqueduct deliveries until the MTBE issue is adequately addressed. At the request of the RWQCB Duke Energy samples and tests the North Well for MTBE on a quarterly basis. MTBE has not been detected at the North Well (White 2001).

SOILS

The MBPP site is located along the Santa Lucia Range immediately adjacent to Morro Bay. The site is underlain by fill with an average depth of about 8 feet. The fill is generally comprised of sand and gravel material. The fill overlies Holocene age alluvium and bay deposits. The alluvium and bay deposit material consists of sand, gravel and marine clay with underlying fractured sandstone and shale deposits. The current elevation of the MBPP site ranges from approximately 15 to 23 feet above mean lower low water level (MLLW). The existing elevation in the area of the proposed MBPP project site is about 23 feet above MLLW (Duke 2000a). The new units will be located within the existing fuel tank farm. Surficial characteristics include areas of gravel and exposed soil with sparse vegetation. All linear facilities, with the exception of the discharge pipeline interconnections, will be located in the northwestern portion of the site, which is currently covered by asphalt. The discharge pipeline interconnections will traverse across dune sands located on the Den Dulk property located to the south of the site. As part of the proposed MBPP project, the Applicant intends to purchase a portion of the Den Dulk property. Refer to the **Land Use** section for further information regarding the acquisition of the aforementioned land.

The majority of the proposed MBPP will be located on the Psamments and Fluvents soil type. The extreme western portion of the tank farm, including the area of the Den Dulk property where the discharge lines will interconnect, consists of the Dune Land soil type. The Psamments and Fluvents soil type has a sand to loamy sand texture. These soils may contain thin layers of sandy loam, silt or gravel. The erosion hazard is classified as moderate. Because of the rapid permeability, low to very low available water capacity, and nutrient deficiencies associated with larger textured soils, this soil type poses limitations on vegetal establishment. The Dune land soil type is sandy textured with very rapid permeability. The erosion hazard is high. Limitations associated with the Dune land soil type would be similar to the Psamments and Fluvents (Duke 2000a). It should be noted that previous filling activities occurred at the MBPP. Therefore, site conditions are not representative of the native soil conditions described in the soil survey. The average depth of the fill is approximately 8 feet and consists of a heterogeneous mixture of sand, silts, and other fill-related materials (Duke 2000a).

SOIL CONTAMINATION

Soil contamination by petroleum hydrocarbons is evident near the Beach Valve Area, Fire House No. 1, former transformer oil lines in the Switchyard and oil circuit

breakers 422, 432 and 442 also located in the Switchyard. Remediation of contaminated soil at the oil transfer pond was completed in 1997 (Personal Communication, James White, Duke Fluor Daniel, 2001). Limited testing within the aboveground fuel oil Tank Farm identified minor TPH contamination extending down to the soil-groundwater interface. No soil sampling or testing has been conducted beneath the existing oil tanks (PG&E 1997b; PG&E 1997c)

FLOODING

The Federal Emergency Management Agency (FEMA) Flood Zone Map (1985), as part of the Flood Insurance Rate Map (FIRM), indicates that the proposed MBPP units will be within the 100-year floodplain. The remainder of the MBPP site is within an area between the 100-year and 500-year floodplain. The FIRM and Flood Insurance Study (FIS) depict the 100-year base elevation at 21 feet. Further investigations by a private engineering firm determined the 100-year base elevation at 23.73 feet. The Applicant indicates that a Flood Insurance Study (FIS) conducted by FEMA states that there has not been a history of serious flooding problems associated with the streams that flow through Morro Bay and that the MBPP site has no history of flooding. The Applicant further indicates that the FIRM does not reflect the elevations of the existing berm/levee system that surrounds the tank farm. Energy Commission staff is currently awaiting additional information in order to further evaluate any potential for flooding of the MBPP project site.

EXISTING MORRO BAY POWER PLANT SITE

The operation of the existing Morro Bay Power Plant is discussed here because very similar operational activities will take place at the proposed power plant. Information regarding the proposed power plant is included for comparison to the existing power plant operation when applicable and available.

The proposed Morro Bay Power Plant (MBPP) project will be located on the northwestern portion of the existing Morro Bay Power Plant industrial site in the City of Morro Bay, San Luis Obispo County. The existing Morro Bay Power Plant is comprised of 4 conventional steam generating power plant units. Units 1 and 2 were built in the 1950's and began operating in 1955-56, while Units 3 and 4 began operating in 1962-63. The rated total plant output of the existing plant is 1002 MW gross (DUKE 2000a). The technology used at the existing plant produces high-pressure steam in a boiler fueled by natural gas that directs that steam to a steam turbine that drives a generator and produces electricity. Duke is proposing to replace these units with state-of-the-art combined cycle units that will generate a total of 1200 MW.

The existing plant draws seawater from Morro Bay Harbor for cooling. The existing seawater intake structure is located across the Embarcadero from MBPP in Morro Bay Harbor and consists of a grating to block the intake of large debris, traveling screens that are periodically washed to remove smaller debris, eight circulating water pumps (two per unit) and related auxiliary equipment. Units 1 and 2 currently use 184,000 gallons per minute (gpm) and units 3 and 4 use 280,000 gpm for a total seawater-cooling requirement of 464,000 gpm. After passing through the plant's condensers and absorbing the heat from the steam turbines, the heated

water is returned to the ocean via three separate discharge tunnels (one for units 1 and 2 and separate tunnels for units 3 and 4). The discharge for the four units flow into a common canal for a short distance prior to entering Estero Bay at the shoreline just north of Morro Rock (DUKE 2000a).

Other water requirements for the existing plant include make up water for the steam cycle of units 1-4, equipment washdown, potable and sanitary uses, and firewater supply. Makeup for the existing boilers is supplied by seawater brought in from the once-through cooing system. Approximately 980,000 gallons per day (680 gpm) is treated in the on-site evaporator system to produce approximately 250,000 gpd (174 gpm) that is used in the boilers to replace water that is lost by blowdown and miscellaneous losses.

According to James White of Duke/Fluor Daniel, the existing MBPP produces groundwater from two wells located in the north part of the site for use at the site (2001). The North Well is located immediately south of Morro Creek and between Highway 1 and the bike path. The South Well is also between the highway and the bike path approximately 350 feet south of the North Well. The North Well is the primary supply and the South Well is used for back-up and peak supply. The well water is pumped into a standpipe to meet demand within the power plant and the adjacent PG&E switchyard. Fresh water from the wells will be used intermittently for washing equipment, as well as for the potable and sanitary requirements. Fresh water from the wells is also stored onsite and replaced as required for the firewater system. Well production is not metered but daily flows are estimated to be 10,000 gallons and during maintenance periods more than 80,000 gallons per day may be used for short term activities such as stack washing, boiler fireside washing, and air preheater washing. (DUKE 2000a).

COOLING WATER WITHDRAWAL

The existing Morro Bay Power Plant withdraws up to 464,000 gpm from Morro Bay. This volume is about 6.3 percent of the average tidal exchange volume (during the larger of the two daily tides). This percentage increases to about 9% for smaller tides. The relative volume of water the plant uses compared to the tidal exchange volume suggests that the plant effect on tidal flows in Morro Bay is relatively small. This effect is largely limited to the portion of the bay between the plant intake and the bay entrance. Upstream of the power plant intake, the effect on the bay water and circulation is expected to be minimal. Duke Energy sponsored a detailed study of water level and current measurements, which concluded that while creek inflow affects the tidal flows in the interior of Morro Bay, the Morro Bay Power Plant discharge does not (Jay 2001).

WASTEWATER

The onsite wastewater collection system operates under the plant's existing NPDES permit. All plant wastewater streams that contain regulated constituents are treated prior to discharge to achieve allowable limits. Currently, sources of wastewater that are generated by the power plant operation and maintenance include seawater that has been circulated through the plant condensers, discharge of intake screen wash, evaporator blowdown, boiler blowdown, bearing cooling water, floor drain water and

other miscellaneous plant liquids. The seawater cooling system, including the screenwash water, discharged an average of approximately 504 million gallons per day (mgd) from June 1999 to June 2000, which is the highest flowrate in recent years but is still lower than the maximum permitted limit of 725 mgd. The annual average boiler blowdown, plant washdown, and evaporative blowdown total approximately 100,000 gpd. Additional waste discharge streams that are routed to the cooling water outfall include process wastewater that has been routed through an oil/water separator, equipment washdown water, basement sump water, and stormwater. The oil/water separator discharges an average of 5000 gpd of plant wash water and precipitation runoff from roof drains, and storm drains in the area of the boiler fans. Stormwater from general plant areas such as parking lots, roads, and other non-industrial areas currently flow directly to Willow Creek.

The site is serviced by a sanitary lift station for domestic wastes that are collected and sent to the local sewer system.

COOLING WATER DISCHARGE

Currently, the existing power plant discharges cooling water to Estero Bay, just north of Morro Rock, through a surface channel. The discharge flowrate is up to 1,000 cubic feet per second (cfs) and the discharge temperature rise is up to 20°F. The flows and/or temperature rises are smaller when the plant load is less than capacity. The channel has a bottom width of 50 ft and side slopes of about 45 degrees. The channel bottom elevation at the discharge point is 5.5 ft below MLLW, but the channel is partially obstructed by large rocks at the point where it enters Estero Bay.

Duke Energy has implemented a research program to characterize the thermal discharge from the Morro Bay Power Plant (DUKE 2000a - Appendix). A draft report describing results of the investigations to date, the Thermal Discharge Assessment Report (DUKE 2001x), has been issued, and much of the following assessment is based on this draft report.

The thermal discharge study plan calls for a multi-pronged approach including the following elements that are used to study the plume:

- Fixed temperature recorders were deployed at about 35 locations. Among those, some are stationary recorders measuring temperature at a fixed elevation, and many are floating recorders measuring temperature at a fixed depth below the water surface. At several floating recorder locations, multiple recording depths were implemented. Floating recorders are preferable for thermal plume characterization because they maintain the same depth below the surface at all times. The temperature variations measured by stationary recorders are due to both variations of water surface elevation and variations in plume temperatures. The temperature recorders record temperature at approximately 20-minute intervals for an extended period of time.
- Periodic boat-based surveys with two vessels, one for deep water and one for the surf zone were planned. Measurements in the surf zone, however, were found to be impractical and were abandoned. Measurements from the boat

were conducted using temperature recorders at the surface and at 3 and 10 ft depths. The objective of the boat surveys is to provide temperature maps as well as calibration of the aerial infra red surveys. Boat surveys have been conducted in July 1999, October, November and December 2000, and January 2001 (Duke 2001x).

- Aircraft-based Infrared photography provides instantaneous images of the thermal plume, but in-the-water actual temperature measurements are required to relate the photographic patterns to actual temperatures. Photographic surveys have been conducted on nine days from November 2000 to January 2001, with several surveys typically conducted each day to capture the plume at different times in the tide cycle.
- Wind and wave conditions are recorded for the days of the surveys, as well as the thermal load discharged by the plant.

An important element in the characterization of thermal plumes is the definition of the natural, or background temperature, i.e. the temperature that would have occurred in the absence of the thermal discharge. For this assessment, temperatures measured at the Estero Bay buoy, approximately 2.3 km northwest of the discharge point were used. This distance is large enough to minimize plant effects, although it appears that, occasionally, temperature rises of 1 to 2°F at the buoy are attributable to the plant (DUKE 2001x).

During the summer, water temperatures in Morro Bay often rise above Estero Bay temperatures due to solar heating in the shallow, quiescent water environment. However, because the plant intake is near Morro Bay's entrance and at depth, intake temperatures are not significantly different from Estero Bay temperatures. Measurements indicate that *average* intake temperatures were up to 1.3 ^{o}F higher than Estero Bay background temperature in June, with smaller rises from February to October. However, these temperature differences are variable and can exceed 3°F in the summer (DUKE 2001x).

Plume Configuration

The thermal surveys show varying thermal plume configurations during a tide. During flood (rising waters), currents are predominantly towards the north and the plume travels in a northwesterly direction. During ebb (falling waters), currents are largely to the south and the plume wraps around Morro Rock. The effects of waves and wind add to these basic features. Because the predominant wave direction is from the west-northwest, a southerly alongshore current develops in the near-shore zone, which frequently keeps the plume from the beach, and pushes it against Morro Rock (DUKE 2001x).

The power plant production level was variable during the monitoring period, and although some information on power plant production is provided, data corresponding to the different surveys is not provided. The power plant production levels during the monitoring period represent actual conditions, and therefore provide an indication of actual impacts. However, it is likely that the new plant will be used at a level closer to its capacity than the existing plant. This must be taken

into account when extrapolating current results to future conditions; however, because the Applicant has not provided necessary data, extrapolation cannot be done without information on power plant loading during the surveys.

ENVIRONMENTAL IMPACTS

PROJECT SPECIFIC IMPACTS

The proposed Morro Bay Power Plant (MBPP) will be comprised of two (2) new combined cycle units each rated at a capacity of 600MW. Each unit will include two natural gas fired General Electric model PG7241 "7FA" and one steam turbine generator operating in a combined cycle mode producing approximately 618 MW gross power at design conditions of 64.1°F ambient. The steam cycle will use demineralized water to create steam in the heat recovery steam generator (HRSG) to drive the steam turbine. Supplemental duct firing will be used for periods of peak operations to produce additional power during which time the maximum steam is produced. When duct-firing, steam will be produced at 1,725 pounds per square inch (psi) and 1,055°F and flows to the steam turbine throttle inlet (DUKE 2000a).

WATER SUPPLY

COOLING WATER

The steam used to produce power in the steam turbines will be cooled in a condenser that will use a once-through ocean water-cooling system that extracts seawater from Morro Bay using the existing plant intake structure (DUKE 2000a). The water used for cooling the condenser is called circulating cooling water. The eight existing circulating cooling water pumps will be replaced with eight new pumps, each with an operating capacity of approximately 41,250 gpm. New pipelines will be installed on site to connect the combined cycle units to the existing Units 1-4 cooling water supply and discharge conduits. The cooling water return will utilize the existing Units 1 through 4 discharge tunnels (DUKE 2000a). After the new units are operational, the existing units will be demolished and the new units will continue to utilize the cooling water supply system.

The circulating cooling water requirements for each of the combined cycle units is expected to be approximately 165,000 gallons per minute (gpm) when the unit is operating at maximum output. Thus the total circulating water requirement for the new plant will be approximately 330,000 gpm, which is lower than the existing circulating water flow requirements for units 1-4 of 464,000 gpm. The current plant is operated under a NPDES permit (No. CA 0003743) last reissued on March 10, 1995 by the Central Coast Regional Water Quality Control Board (Duke 2000a - Appendix). This permit allows the plant to discharge a maximum flow of up to 503,000 gpm of cooling water to Estero Bay at a temperature increase of up to 30°F above the temperature of the intake. The applicant is expecting that the temperature rise for the new combined cycle units will be 20°F at maximum plant load (DUKE 2000a). It was concluded in the Setting section of this PSA that the current withdrawal had a minimal impact on flows in Morro Bay upstream of the

intake (Jay 2001). As the proposed withdrawal is smaller in magnitude, its impact on flows should also be minimal. Therefore, the cooling water withdrawal can be concluded to have minimal to no impact on sedimentation in the portion of Morro Bay upstream of the intake, which includes the majority of the bay. The effect of the cooling water system on the biological resources of the bay is covered in the **Biological Resources** section of this Preliminary Staff Assessment.

PROCESS WATER

The primary water demand other than cooling water will be makeup water for the steam cycle to replace HRSG blowdown and steam losses. The project will use demineralized water to meet this demand. The demineralized makeup water is produced from seawater that has been desalinated by an existing vapor compression evaporator system followed by a polishing demineralizer. The polishing demineralizer is supplied by a contractor who removes it from the site periodically for regeneration, eliminating on-site requirements for chemicals or waste discharges for the regeneration process. A portion of the HRSG blowdown will also be collected and recycled to the demineralizer for re-use as makeup.

The average makeup water demand will be approximately 57,600 gallons per day (gpd) per combined cycle unit when operating at 100% capacity, for a total of approximately 115,000 gpd. Of the 115,000 gpd requirement, approximately 80,600 gpd is recovered blowdown from the HRSG and approximately 34,600 gpd is distilled water that is generated from a seawater evaporator. In addition to HRSG makeup, demineralized water is used for periodic wash of the combustion turbine as well as other combined cycle systems requiring high purity water (DUKE 2000a).

UTILITY WATER

Other plant water uses include utility services such as wash down of equipment areas, potable and sanitary use, emergency eyewash and shower stations, landscaping, and firewater. These additional water demands at the proposed facility are estimated to remain at 10,000 gallons per day (gpd) which is supplied by the plants two groundwater wells. The water from these wells will be treated with chlorine prior to use in the plant for domestic purposes (DUKE 2000a). No groundwater is used for cooling at MBPP. Peak flows are not expected to exceed the 80,000 gpd NPDES permitted maximum used during short-term maintenance activities such as HRSG washdowns (DUKE 2000a). Peak groundwater demand will occur during demolition of the Tank Farm and during grading to control dust. This use, combined with the continued domestic demand for the operation of the existing plant, will result in demands of 30,000 to 42,000 gpd during three separate periods of demolition, estimated to be 3 to 9 months in duration each (Duke 2001). Peak demands of 47,000 to 70,000 gpd will occur during construction of the new plant for a period of 9 months. Typical demands of 10,000 gpd are anticipated during approximately 46 months of the 72 month construction period. During operation of the new MBPP, fresh water demand for domestic and landscape irrigation uses is estimated to average 10,000 gpd and reach peaks of 15,000 gpd (Duke 2000a).

GROUNDWATER SUPPLY AND MTBE PLUME MIGRATION

The Applicant estimates the permeability of the aquifers are medium to high based on the nature of the water bearing zones. No pumping test data, pumping records or aquifer parameters are provided for the deep aquifers that are tapped by the supply wells. MBPP uses the maximum daily pumping limit of 80,000 gallons to estimate the maximum pumping rate of 55 gpm. Based on the low pumping rate, high permeability of the aquifer and cross-gradient location relative to the City wells, the Applicant concludes that no pumping interference is anticipated to impact the nearest City well (Duke 2000a).

There are two potential impacts related to groundwater pumping at MBPP. Both impacts will occur during construction when groundwater demand is increased. Well interference at the nearby City wells will exceed the levels that occur under typical pumping by MBPP. The peak demand of 70,000 gpd for a construction period of nine months will potentially cause well interference, lower the water level, and modify the local flow direction near the City of Morro Bay wells. The greatest groundwater use will occur when high rate pumping is required during construction of the new units (Duke 2000a). If this period coincides with seasonal low water levels in the summer and fall, well yields for both the City and the MBPP wells could be diminished.

The second impact involves modification of the local groundwater gradient which may cause the MTBE plume located northeast of the project to migrate toward the supply wells. Sustained pumping by the MBPP wells will potentially alter the migration path of MTBE contaminated groundwater, encourage migration toward the City or MBPP wells, and impact efforts to control and remediate the MTBE plume.

WATER QUALITY

Wastewater disposal can lead to soil, surface, and groundwater degradation and impairment of beneficial uses.

THERMAL DISCHARGE

Duke Energy is proposing to discharge the cooling water from the new plant to Estero Bay through the existing discharge channel. As indicated above, the peak flowrate will be reduced from 464,000 gpm to 330,000 gpm. At the same time, the discharge temperature rise will decrease from 22°F to 20°F. In contrast to constituents that do not affect the water density, such as bacteria, induced temperature rises are not proportional to the amount of heat discharged. The proposed changes in flow and temperature rise will result in a more buoyant plume, which will tend to spread more and entrain less ambient water. However, part of the entrainment is driven by wave action and may not decrease significantly compared to existing conditions. Further, accounting for the effect of discharge buoyancy on dilution would require extensive analysis. Because the change in plume buoyancy is relatively limited, it is reasonable to assume that receiving water temperature rises are approximately proportional to the rate of heat discharge (BTU/hr). The rate of heat discharge of the new plant will be 25% lower than the existing one at

peak capacity. The data presented in the Thermal Discharge Assessment Report is representative of the conditions that can be expected with the proposed plant.

The proposed plant will consistently cause temperature rises exceeding 4^oF along most of the northern shore of Morro Rock, occasionally extending up to 4,000 ft around Morro Rock. These rises may exceed 4^oF for varying fractions of the time from 6% to over 40%. The thermal plume from the current plant does not meet the standards of the California Thermal Plan for *new* discharges:

> *The discharge of elevated temperature wastes shall not result in increases in the natural water temperature exceeding 4° F at (a) the shoreline, (b) the surface of any ocean substrate, or (c) the ocean surface beyond 1,000 feet from the discharge system. The surface temperature limitation shall be maintained at least 50 percent of the duration of any complete tidal cycle.*

However, as the RWQCB determined that this discharge is an *existing* discharge, these numerical criteria are not applicable; the thermal plan says that with respect to existing sources the thermal plume shall comply with limitations to assure protection of the beneficial uses (CCRWQCB/Briggs 2001a). This issue is addressed in the **Biological Resources** section of this PSA.

Size of 4^oF Temperature Rise Isotherm

Maps of the 4^oF temperature rise isotherms (lines of constant temperature) were developed for eight instances between November 2000 and January 2001. Power plant production levels during these surveys varied from 63 to 85 percent of capacity. The length of the 4^oF temperature rise isotherms for these surveys varied from 2,000 to 5,000 ft from the discharge point (DUKE 2001x).

Alternative Discharge

Duke Energy considered the alternative of discharge relocation offshore, with a single port vertical discharge about 3,000 ft from shore (DUKE 2000a). This alternative was considered infeasible by the Applicant because of its high cost and environmental impacts. The environmental impacts mentioned, as stated by the Applicant, are primarily the increased travel time for entrained organisms, which would reduce their chance of surviving passage through the cooling system. In fact the additional travel time would be relatively small, and return to ambient temperature would be more rapid. Furthermore, it is assumed that 100% fatality occurs regardless of the length of the discharge pipe.

The single port discharge considered by Duke Energy, however, provides relatively modest mixing compared to the alternative of a multiport diffuser. For over 20 years, most, if not all, new power projects in the US using once through cooling with discharge to the ocean have used multiport diffusers. For example, the San Onofre Nuclear Generating Station, Units 2 and 3, which were built in the late 70's, each use a 2,500 ft long multiport diffusers starting respectively 3,500 and 6,000 ft offshore. The power capacity of Units 2 and 3 is 1140 MW each, which is only 10% more than that of the Morro Bay plant. Thus, the proposed project cannot be

considered to qualify as using Best Technology Available (BTA) relative to its cooling water disposal.

The design of a multiport diffuser for any given application depends on numerous factors including discharge flowrate, water depths, currents, stratification and required performance. For preliminary evaluation for the Morro Bay Project, a cost of $10,000 per ft (including engineering design and construction supervision) can be assumed for an offshore outfall. The length an offshore outfall would need to be determined by detailed studies, but assuming an offshore extent of 4,000-ft, a cost estimate would be $40 million. This estimated cost is indeed substantial and must be balanced against the magnitude of the environmental impacts of the current discharge. Refer to the **Biological Resources** section of this PSA for further discussion of impacts.

WASTEWATER DISCHARGE

Duke Energy proposes to discharge the heated cooling water from the proposed units to the existing units 1 through 4 outfall. Due to the differences in cycle design between the conventional Units 1-4 steam cycle and the MBPP combined cycle that use combustion turbines to generate most of the power, much less water is discharged to Estero Bay. Most of the other waste discharge streams are comparable on an intermittent basis. A comparison of the wastewater discharge flowrates between the existing units and the proposed units is shown in Table 3 below.

SOIL & WATER RESOURCES TABLE 3
Annual Wastewater Discharge

Waste Discharge	Units 1-4 Annual Flow Mgal/day	MBPP Annual Flow Mgal/day	Discharge/Recycle Location
Circulating Water	725,000[a]	480,000	Estero Bay
Evaporator Brine	240	240	Estero Bay
HRSG Blowdown	50	81[b]	Demineralizer
Floor/Equipment Drains[c]	75	75	Oil/Water Separator
Oil/Water Separator Water	75	75	Estero Bay
Oil/Water Separator Oil[c]	<1	<1	Off-site Disposal
Sanitary Wastes[c]	5	5	Sewer

a – Permit Limit, actual flow June ‘99-Jun ‘00 - 504,000gpd
b – From Appendix 8-2
c – Intermittent flows
DUKE 2000a Pages 6.5-11, 6.5-65

Based on the lower or comparable wastewater discharge flows from MBPP, staff concludes that there will be no significant adverse impacts for the area of wastewater discharge when compared to the operation of the existing units 1-4.

SPILL PREVENTION

The Applicant has provided general information for the development of a spill prevention control and countermeasure plan (SPCC) that covers chemical spill control and management of the hazardous materials that will be stored and used on the site.

Some of the hazardous materials used during construction include petroleum hydrocarbons, cleaning fluids and solvents. Waste generated during construction will be taken to a temporary waste storage facility onsite then transported to an authorized waste management facility. Major hazardous material stored onsite during operation of the proposed MBPP, will be aqueous ammonia and petroleum-based substances (refer to the **Hazardous Materials Management** section of this PSA for more information). These and other materials would be stored in storage tanks that would be surrounded by a containment berm. Other containment/ treatment facilities include curbs, berms, concrete pits, and use of double-wall piping (when feasible) to minimize potential of a release from ruptured piping. Containment areas will be drained to appropriate collection sumps or neutralization tanks for recycling or off-site disposal. Programs for spill response would be provided for project workers (refer to the **Worker Safety** section of the PSA for further discussion of such programs).

Spills have the potential to cause significant degradation to surface/subsurface waters and soils. Energy commission staff will provide a condition that requires the Applicant to submit an updated SPCC plan that includes the final design of the proposed MBPP and incorporates comments by Energy Commission staff.

STORMWATER RUNOFF

Stormwater runoff is currently routed through an existing onsite stormwater system and discharged into Willow Camp Creek. Runoff from industrial portions is directed to retention areas where it is monitored, sent to oil/water separators, then discharged. The Applicant has indicated that the current discharge to Willow Camp Creek would be discontinued and rerouted to Morro Bay. No hydrologic/hydraulic data has been provided for the existing stormwater system (Duke 2000a).

The Applicant has indicated that the amount of impervious area associated with the proposed MBPP will increase; therefore, post-development runoff will exceed the pre-development conditions. The stormwater system for the proposed MBPP project will discharge into the existing system (Duke 2000a). Proposed MBPP site drainage facilities would be designed for a 10-year frequency runoff event (Duke/Trump 2001a, Data Response 98) Roadway culverts will be designed for a 50-year runoff event and interim facilities will be designed to convey a 2-year runoff event (Duke 2000a, Appendix 8-3). The City of Morro Bay Public Services Department has requested that the drainage system be designed to accommodate

the 100-year, 24-hour duration runoff event (City of Morro Bay 2000x). The Applicant has not provided calculations to ensure that the existing storm sewer system has sufficient capacity to handle the proposed system. If the existing system is undersized by current standards, the runoff from the proposed MBPP could be handled separately to minimize impacts to the existing system. Existing and proposed stormwater information was requested; however, the Applicant has not provided the information. This issue is addressed the Conditions of Certification 2 of the PSA.

CONTAMINATED SOILS/GROUNDWATER

Construction of the new power plant facilities will require demolition and removal of the above ground fuel oil Tank Farm. Grading and excavation in this area may potentially encounter hydrocarbon-contaminated soil and groundwater. No significant soil contamination was discovered at borings located between the above ground tanks but sampling and testing beneath the tanks was not possible. Trenching for the new cooling water influent and effluent pipelines will pass through the Tank Farm and the existing Beach Valve Area. Hydrocarbon contaminated soil and groundwater were identified at the Beach Valve Area. Excavation of contaminated soil and groundwater should be anticipated in the trenches for the proposed effluent cooling water pipeline in this area (PG&E 1997b; PG&E Table 3-14). Energy Commission staff is currently coordinating with the Central Coast Regional Water Quality Control Board regarding onsite contaminated soils and groundwater issues. Refer to the **Waste Management** section of the PSA for further discussion of the contaminated soils and groundwater issues. Refer to the Conditions of Certification of this section that address contaminated soils and groundwater issues.

EROSION AND SEDIMENTATION

POWER PLANT CONSTRUCTION AND OPERATION

Accelerated wind and water-induced erosion may result from earthmoving activities associated with construction of the proposed project. Activities that expose and disturb the soil leave soil particles vulnerable to detachment by wind and water. Most of the annual precipitation in the Morro Bay area occurs during the mild, wet winters. Prolonged periods of precipitation, or high intensity and short duration runoff events coupled with earth disturbance activities can result in onsite erosion eventually increasing sediment load within nearby receiving waters.

The Applicant has indicated that approximately 8 acres of land associated with the MBPP would be disturbed during construction (Duke 2000a). The Applicant has not provided the earth disturbance required for the entire MBPP project. Site excavation work would consist of the removal, storage, and/or disposal of earth, sand, gravel, vegetation, organic matter, loose rock, boulders, and debris to the lines and grades necessary for construction. Refer to the **Geologic and Paleontology section** for further discussion on geotechnical impacts. Refer to Staff Proposed Mitigation for further discussion of erosion control measures. Suitable materials for backfill would be stored in stockpiles at designated locations.

The Applicant expects the cut and fill regime to be balanced but has not identified an offsite borrow or disposal location at this time (Duke 2000a).

Backfilling activities would involve the removal of unsuitable material and rocks, followed by proper compaction techniques. Embankments, dikes, bedding for buried piping, and backfill surrounding structures would be compacted to a minimum of 95 percent modified proctor. All other backfill will be compacted to a minimum of 85 percent modified proctor (Duke 2000a). The base floor elevation for all structures would extend approximately 6 inches above the final grade. In order to achieve positive drainage, the final grade will slope away from all structures between 1 and 2 percent (Duke 2000a).

As required by the NPDES permit, a Storm Water Pollution Prevention Plan would be implemented to minimize erosion from construction activities. An erosion control and revegetation plan that addresses standard erosion runoff and sedimentation techniques would be developed and implemented for construction, post-construction, and operational phases.

PIPELINE CONSTRUCTION AND OPERATION

Temporary and permanent disturbances related to construction of linear facilities (pipelines) are expected to occur within the existing MBPP site. Pipeline construction for stormwater runoff, cooling water intake and discharge, and natural gas will be limited to onsite tie-ins. The outfall pipelines would tie-in to the existing pipeline that is located approximately 300 feet south of the MBPP site. Two natural gas pipelines will extend from the northeastern portion of the site and connect to the existing PG&E regulator station. “Sanitary wastewater will be routed to the Morro Bay municipal sewer system” (Duke 2000a). Conceptual construction and grading specifications have not been provided for all proposed pipelines. To evaluate this aforementioned issue refer to the Conditions of Certification section of this PSA that address this issue.

TRANSMISSION FACILITIES

No earthmoving will be required for the proposed transmission line interconnection. The 230 –kV interconnection will be from the existing PG&E switchyard, a distance of approximately 300 feet to the gas and steam turbine generators (Duke 2000a).

ROADS

An onsite road system will consist of constructing access roads into and around the proposed MBPP. An access road will be constructed at the southwestern portion of the facility and connect with the existing onsite road system. The proposed “loop” road around the facility would be approximately 20-feet wide (Duke 2000a). No further construction and grading information is provided for the proposed road network.

BRIDGE CROSSING

A bridge is proposed over Morro Creek and will create a continuous road system for Embarcadero Road MBPP (Duke 2000a). No information is provided regarding

construction specifications and earthmoving for the bridge installation (refer to Conclusions and Conditions regarding this issue). Staff will continue to address this concern between now and the Final Staff Assessment.

BIKE/PEDESTRIAN PATHS

The Applicant proposes to construct two new bike/pedestrian paths in the vicinity of the MBPP. A Class I path will be constructed along the south side of the MBPP to provide access from Main Street to Embarcadero. A Class II path will be constructed to link an existing Class I path along Embarcadero Road. The existing Class I path along Embarcadero Road will transition into a Class II path as it crosses over the proposed Morro Creek bridge and continues northward towards Highway 1. The additional bike/pedestrian paths will create a loop around the MBPP (Duke 2000a). No grading/excavation information is provided by the Applicant (refer to Conclusions and Conditions sections regarding this issue). Staff will continue to address this concern between now and the Final Staff Assessment.

FLOODING

The existing 18-foot high berms are at an approximate elevation of 33.9 feet (MLLW). The 100-year and 500-year flood elevations are approximately 23.73 feet (MLLW) and 25.73 feet (MLLW), respectively (Duke 2000a).

The Applicant has indicated that the existing berm elevations exceed the 100 and 500-year base flood elevations and that the FIRM does not reflect the berm and dike system. Therefore, the portion of the tank farm that will include the proposed MBPP is currently depicted as occurring in the 100-year flood zone. However, if FEMA requires modifications and grade changes to the existing berm, these modifications would adequately protect the proposed MBPP facility and comply with FEMA and would qualify for a Letter of Map Amendment of Revision. The Applicant has also indicated that the dike and berm and any other portions of the project within the 100-year base flood elevation would be designed to comply with the City of Morro Bay Flooding Ordinance (Duke 2000a).

Energy Commission staff will provide further discussion and evaluation of flooding in the FSA. Staff is also coordinating with the City of Morro Bay and FEMA to ensure the Applicant is addressing their concerns.

CUMULATIVE IMPACTS

COOLING WATER DISCHARGE

The Morro Bay Wastewater Treatment Plant outfall discharges about 6,000 ft north of the Morro Bay Power Plant cooling water outfall. The effluent from the wastewater outfall does not have any substantial temperature rise, so that cumulative thermal impacts are not a concern. When the cooling water plume reaches the wastewater discharge area, the temperature rises there are very small, so that thermal impacts would not exacerbate existing water quality impacts due to the wastewater discharge.

The Diablo Canyon Nuclear Power Plant, located about 12 miles south of the Morro Bay Power Plant, uses ocean water for cooling, but the distance is such that cumulative impacts are not a concern.

GROUNDWATER

As noted above, staff identified a potential significant short-term direct impact due to the project's increased water use during construction. However, it is staff's opinion that the potential for significant adverse short-term or long-term cumulative impacts on groundwater quality or supply is unlikely. Long-term impacts are unlikely because the Morro Bay Power Plant fresh water demand will not exceed the historic average water use. In fact, the overall groundwater pumping will be reduced during operation of the new plant. As a result, regardless of the water use by reasonably forseeable future projects located in the City of Morro Bay (Duke 2000a), the project is creating a reduction in water use and will not contribute to a significant cumulative impact. In addition, the City of Morro Bay evaluated the availability of water in considering approval of each project and found that domestic water supplies are adequate to meet the additional demand of these projects.

A cumulative short-term impact would occur if the high demand groundwater pumping required during construction at MBPP coincides with the City using the Kaiser Well Field to meet new demand. This combined pumping could cause the MTBE plume, currently north of the supply wells, to migrate and adversely affect the water quality. As a result, staff will recommend routine monitoring of the supply wells for MTBE and a contingency plan to provide alternate sources of water or MTBE treatment units at the City wells as conditions of certification. Staff notes that the City currently relies on State Water Project water and uses groundwater only during interruptions in deliveries from the State Water Project, and that significant effects on the plume are unlikely.

EROSION AND SEDIMENTATION

Construction and operational activities related to the MBPP project may cause accelerated wind and water erosion; however, the proposed mitigation measures to be incorporated in the SWPPP as part of the NPDES requirements would ensure that erosion and potential sedimentation impacts from the MBPP would not contribute to cumulative impacts related to nearby projects.

ALTERNATIVES ANALYSIS

Section 316(b) of the Clean Water Act requires that the "… location, design, construction, and capacity of cooling water intake structures reflect the best technology available for minimizing adverse environmental impact." The intake structure must meet this requirement regardless of previous permit findings.

ALTERNATIVE COOLING WATER TECHNOLOGIES

Tenera Environmental performed a 316(b) Resource Assessment for the MBPP that included the following alternative cooling technologies:

OFFSHORE SYSTEMS

Offshore locations would require the construction of large diameter pipe structures extending beyond the Morro Bay Harbor. The applicant concluded that because of the large tidal exchange between the bay and the harbor that an offshore intake appears to offer little or no potential for reducing the losses of fishes and invertebrates entrained or impinged at the combined cycle unit's intake (Duke 2000x). Refer to the **Biological Resources** section of this PSA for more information.

CLOSED-CYCLE COOLING WATER SYSTEMS

The closed-cycle cooling water technologies use mechanical draft recirculating cooling towers with either fresh water or seawater as the cooling medium. Circulating water would be used in the heat rejection cycle providing cooling water to the surface condenser, which condenses steam from the exhaust of the steam turbines. The cooling water would circulate through mechanical draft cooling towers, which will use motor driven fans to move air into contact with the flow of the cooling water. The heat from the cooling water would be discharged into the atmosphere by evaporation. The fine mist of water droplets entrained in the warm air leaving the cooling tower will be limited by the use of drift eliminators to control losses. To replace water lost through evaporation and blowdown, water would be made up to the cooling water system with fresh water as well as blowdown from various plant systems. The circulating water system would use chemical treatment and blowdown to maintain water quality at a level to avoid mineral deposits in the cooling towers. The application of these technologies would totally eliminate the need for the intake and discharge structures described in the assessment but would involve other impacts. For freshwater cooling towers the water use would create an additional demand on the well water system. The use of ocean water is preferred over that of freshwater for power plant cooling.

State Water Resources Control Board (SWRCB) Policy 75-58 states that the source of power plant cooling water should come from the following sources in order of priority:

1. Wastewater being discharged to the ocean.
2. Ocean water.
3. Brackish water from natural sources or irrigation returns flow.
4. Inland wastewaters of low total dissolved solids.
5. Other inland waters.

The preferred alternative to using fresh water would be to use treated wastewater. The closest source of wastewater is the Morro Bay-Cayucos Wastewater Treatment Plant. However, this plant produces only secondary treated wastewater at a capacity of 2.06 million gallons per day while the MBPP is estimated to require between 6 to 8 million gallons per day of tertiary treated wastewater. Therefore, there is an insufficient supply of treated wastewater available to meet the needs of

the project. MBPP's current use of ocean water as the subsequent alternative to wastewater is consistent with this policy.

INTAKE MAINTENANCE AND OPERATIONAL MODIFICATIONS

Dredging to control sediment build up that would block cross-sectional area is an appropriate measure since it reduces flow velocities through the intake structure. The Applicant has indicated that the new combined cycle units will have multiple cooling water pumps which will allow reduced cooling water flows at less than maximum capacity operation. Operation in this manner will reduce the velocities through the intake system and thereby reduce both entrainment and impingement, as well as heat loading to the receiving waters (DUKE 2000a).

MITIGATION

APPLICANT'S PROPOSED MITIGATION

The applicant has indicated that because the new combined cycle plant will be designed to use significantly less cooling water (approximately 29% reduction) that the impacts of the cooling water system on the marine environment will be reduced. This includes the effect of lowering the velocity at the intake from the current 0.37 feet per second for units 1 and 2 and 0.51 feet per second for units 3 and 4 to 0.3 feet per second for the combined cycle units (DUKE 2000a). Duke therefore concludes that no further mitigation measures are proposed for the water resources related areas. See the **Biological Resources** section of this PSA for a discussion of biological resource effects.

EROSION AND SEDIMENT CONTROL

The Applicant has provided an existing Stormwater Pollution Prevention Plan (SWPPP). However, the existing plan, which was drafted in December 1996, does not reflect the proposed conditions for the MBPP. The Energy Commission staff has requested an updated SWPPP (CEC 2001x). The Applicant also provided drawings that identify erosion control facilities.

The AFC identifies a number of potential BMPs for the construction and operation of the proposed MBPP within the AFC:

- Potential permanent vegetation and paved/gravel stabilization
- Utilize soil stabilizers (i.e. water) as appropriate to minimize dust
- The use of geotextiles and mats to stabilize slopes
- Storm drain inlet protection to prevent sediment-laden runoff from entering inlets or catch basins.
- Utilize silt fence, straw bale barriers and sandbags to intercept sediment-laden runoff from disturbed soil
- Swales and culverts for runoff conveyance

- Implementation of a spill prevention and control plan
- Proper disposal of construction wastes
- Oil/water separator system
- Covering exposed contaminated soil to protect groundwater and surface water during a runoff event

CEC STAFF PROPOSED MITIGATION

GROUNDWATER

The applicant has not proposed monitoring and mitigation measures that address groundwater issues during the construction of the power plant facilities. Energy Commission staff identified potential impacts with respect to groundwater use, which include pumping interference, seasonal depletion of water supply and modification of the upgradient MTBE plume. These impacts are related to short term construction periods. No long term impacts were identified due to the lower demand for groundwater during operation of the project.

Energy Commission staff can not evaluate pumping interference and potential modification of the MTBE plume until adequate data are available to quantify or reliably predict these impacts. This evaluation should occur prior to any pumping that could create these adverse impacts. Consequently, staff recommends that Duke conduct an aquifer test to measure well interference at the City wells, obtain aquifer parameters, and evaluate well interference. MBPP should conduct a long-term aquifer test of MBPP wells under a scenario equivalent to the high demand pumping required for new construction. In addition, Duke should participate in the aquifer test planned for the City wells by providing access for water level monitoring of the MBPP supply wells and nearby piezometers (P-10, P-11 and P-12). These data should be utilized in the groundwater flow model being prepared for the MTBE plume remediation.

MBPP should work jointly with the City, RWQCB and the responsible party to insure the groundwater modeling effort has the best available data. If the model predicts impacts from MBPP pumping, plans for MTBE removal may be required. Alternatively, an MTBE treatment system could be constructed at the City wells and the treated water delivered to MBPP during construction. In any case, MBPP should continue water quality monitoring of the supply wells on a quarterly basis throughout construction and until the local MTBE threat has been resolved. Staff will continue to assess the significance of these concerns between now and the Final Staff Assessment.

The localized areas of groundwater contamination in the shallow aquifers at MBPP should be considered for treatment and reuse for dust control during construction.

The proposed conditions of certification are to allow the Energy Commission Compliance Project Manager (CPM) and the applicant to adopt a compliance

monitoring scheme that will ensure compliance with LORS applicable to the groundwater and soil resources for the project.

STORMWATER AND EROSION CONTROL

Energy Commission staff finds the applicant's proposed mitigation measures for erosion and stormwater to be incomplete. A complete Erosion Control and Stormwater Management plan requires drawings to accompany the narrative portion of the SWPPP. Both the drawings and the narrative should include the following amendments and additions for the proposed MBPP project:

- The topographic features of the proposed project including areas involving all proposed pipeline construction, laydown (staging) area, and stockpile location(s). The mapping scale should be 1"= 100' or less (1"=50' recommended). Sufficient surrounding area including the topography and existing features should also be provided on the drawings.

- A construction sequence that addresses all sequence of events from initial mobilization until final stabilization (i.e. vegetation/asphalt) is achieved.
- Proposed contours should be shown tying in with existing ones. All proposed utilities including stormwater facilities should be shown on the plan drawings. All erosion and sedimentation control facilities should be shown on the mapping. The drawings should contain a complete mapping symbols legend that identifies all existing and proposed features including the soil boundary and a limit of construction. The limit of construction boundary should include the project facility, pipeline areas, stockpile areas, laydown areas, bike paths and bridge construction. The limit of construction ensures all work is confined to the proposed MBPP project in order to protect all surrounding areas not involved in construction or operation of the proposed project.
- Silt fence and sandbags should be used to trap sediment, and not as runoff conveyance facilities. Earthen berms or channels can be substituted to intercept sediment-laden runoff and direct it into the sediment-retention basin.
- All excavated material from the proposed bridge and road construction should be kept away from active flows and out of any wetlands. Site specific BMPs shall be included on the erosion and sediment control plan. The soil should be covered via a liner or anchored mulch. Areas disturbed during construction should be stabilized via permanent vegetation upon completion of the process.
- Specific BMPs for all project-related construction on the drawings (includes but not limited to the access road, bridge crossing and any all linear facilities).
- Proposed vegetative areas on the drawings and a description of revegetation procedures.
- Soil stockpile management BMPs for water and wind erosion
- Maintenance and monitoring protocol for erosion/stormwater control

The stormwater management plan should address the entire drainage area along with supporting calculations that include a curve number, time of concentration, and rainfall intensity. These calculations should be provided to demonstrate that the existing stormwater pipes are of sufficient size to handle the runoff from the proposed project for the 100-year, 24-hour runoff event.

FACILITY CLOSURE

The MBPP project is expected to operate for a minimum of 30 years. Closure options range from "mothballing," with the intent of a restart at some time, to the removal of all equipment and facilities.

The decommissioning plan will be submitted to the Energy Commission for approval prior to decommissioning. Compliance with all applicable LORS, and any local and/or regional plans will be required. The plan will address all concerns in regard to potential erosion and impacts on water quality.

Facility closure activities are not anticipated to impact groundwater resources if contaminated soil and groundwater are remediated and all piezometers, monitoring wells and inactive supply wells are shut down in accordance with State and Local requirements.

COMPLIANCE WITH LAWS, ORDINANCES, REGULATIONS AND STANDARDS (LORS)

It is anticipated that this project will comply with all applicable LORS. However, at this time, a number of issues are unresolved. These issues will be evaluated as additional information is provided by the Applicant.

RIVER AND HARBOR ACT

According to a conversation with Rick Algert, the Morro Bay Harbormaster, Morro Creek is not considered part of the harbor and the proposed bridge project would not require any navigational devices and a "Notice to Mariners". Energy Commission staff is currently coordinating with the Army Corps of Engineers to verify if a Section 10 permit will be required for the proposed bridge project.

CLEAN WATER ACT

The Applicant has submitted an Application for a Modification to an Existing Waste Discharge NPDES Permit to the CCRWQCB. The existing NPDES permit regulates cooling water other wastewater and operational stormwater discharges to surface waters. For the Morro Bay Power Project, the CCRWQCB has determined that the discharge is an "existing" discharge with respect to the State's Thermal Plan. This determination does not relate to the intake structure. The intake structure must meet Clean Water Act Section 316(b) requirements, regardless of previous permit findings. MBPP is obligated to comply with the requirement of 316(b) to meet the "best technology available" criteria. The CCRWQCB is estimating that they will

have a draft NPDES permit by the end of May 2001, a public version in June 2001, hearings in July 2001, and the final permit in October 2001.

ALTERNATIVE INTAKE DESIGNS

The Clean Water Act Section 316(b) requires that the "…location, design, construction and capacity of cooling water intake structures reflect the best technology available for minimizing adverse environmental impact". The administering agency for this requirement is the CCRWQCB, which was delegated this authority by the U.S. Environmental Protection Agency. The intake structure must meet CWA Section 316b requirements, regardless of previous permit findings. Duke contracted with Tenera Environmental Services to perform a 316(b) Resource Assessment.

Part of the review included an evaluation of alternative cooling water technologies. Alternative technologies include:

1. Off-shore intake locations
2. Closed cooling water systems
3. Operational and flow-reduction alternatives

In regards to cooling alternatives, once-through cooling is very efficient. Closed-cycle cooling water systems are generally less preferred due to the need for fresh water, and the fact that salt water cooling towers have many limitations. Dry cooling uses no water and is discussed in the **Biological Resources** section of this PSA.

The final determination of the appropriateness of the technology is to be made not only on the physical design but also on the effectiveness of the design to minimize significant effects on the local organisms. For further discussion of biological impacts and cooling alternatives, please refer to the **Biological Resources** section of the PSA. The cooling system recommendation will be provided in the Final Staff Assessment.

CONCLUSIONS AND RECOMMENDATIONS

Staff does not have sufficient information at this time to make final conclusions, but have included draft conditions and information that is still needed in order to finish its analysis.

BEST TECHNOLOGY AVAILABLE – COOLING WATER INTAKE

The purpose of 316(b) the Clean Water Act is to minimize adverse impacts on the aquatic environment caused by cooling water intake structures. This is achieved through the application of "Best Technology Available" or "BTA". The applicant has submitted their "Evaluation of Alternative Intake Technologies". Staff is evaluating the alternative technologies and will provide conclusions and recommendations regarding compliance with the BTA requirement in the FSA.

GROUNDWATER

Based on available information, staff concludes that groundwater use by the MBPP project will likely comply with applicable LORS. Sustained pumping at the high rates required for construction and simultaneous operation of the existing plant could impact the water levels at the City of Morro Bay Well Field and the MBPP wells. Impact to the City will be significant if Morro Bay's primary source of water is interrupted at the same time as maximum demand at MBPP. A significant impact will occur if MBPP pumping causes plume migration toward the City Well Field, impairs the MTBE cleanup, or MTBE reaches the power plant wells. The project should have no significant impact with respect to groundwater quantity and quality and soil resources if proposed conditions of certification are implemented. Staff will provide further evaluation in the Final Staff Assessment.

EROSION AND SEDIMENTATION / STORMWATER MANAGEMENT & FLOODING

Staff cannot make a determination that the proposed MBPP project will not result in any significant adverse impacts to soil and water resources due to insufficient and incomplete data. On April 20, 2001, Energy Commission staff conducted a phone conference with staff of Duke Fluor Daniels regarding certain outstanding soil and water issues. Until those certain items and other important data are submitted, Energy Commission staff cannot complete its evaluation. The following information is required:

- A SWPP Plan for the proposed MBPP site
- An Erosion and Sedimentation Control Plan and Stormwater Management Plan for the proposed MBPP site
- A Spill Prevention Control and Countermeasure Plan for the proposed MBPP site
- Draft NPDES permit applications for Stormwater Discharges Associated with Construction Activities and Groundwater Discharge
- Hydrologic and hydraulic data for Morro Creek
- Conceptual Stormwater Management Calculations for the existing system and the proposed system. The calculations need to be designed for the 100-year, 24-hour runoff event as per recommendation from the City of Morro Bay (City of Morro Bay, June 26, 2000)
- Conceptual volumes of cut and fill for all project related construction (facility, pipelines, bridge crossing, roads and bike paths)
- Draft demolition plan that identifies the handling and disposal procedures for potential contaminated soil/groundwater
- Revised information stated to be provided by the Applicant in previous Data Responses

Energy Commission staff is currently conducting a flooding analysis to further evaluate the significance of impacts from the MBPP project. Staff is also currently coordinating with the City of Morro Bay regarding the flooding issues. The results of

the analysis and a further detailed discussion will be provided in the FSA. The **Geologic Resources** section will also provide an analysis and discussion in the FSA regarding structural integrity of the berms that will surround the proposed MBPP facility.

CONDITIONS OF CERTIFICATION

SOILS & WATER 1: Prior to site mobilization for the proposed project and any ground disturbance activities associated with construction of any on and offsite project elements, the project owner shall obtain Energy Commission staff approval for a Storm Water Pollution Prevention Plan (SWPPP) as required under the General Stormwater Construction Activity Permit for the project.

Verification: No later than thirty days prior to the start of any earth moving activities, the project owner will submit for approval a copy of the final Storm Water Pollution Prevention Plan (SWPPP) to the Energy Commission Compliance Project Manager (CPM) for review and approval.

SOILS & WATER 2: Prior to beginning any site mobilization activities associated with construction of the project and/or ground disturbance activities associated with construction of any onsite and offsite project elements, the project owner shall obtain staff approval for a final erosion control/revegetation and stormwater plan that addresses all project elements. The final plan to be submitted for Energy Commission's approval shall contain all the elements of the draft plan with changes made to address any staff comments and the final design of the project.

Verification: The erosion control/revegetation and stormwater plan shall be submitted to the Energy Commission CPM no later than thirty days prior to earth moving activities on site or for linear facilities. Approval of the final plan by the Energy Commission CPM must be received prior to earthmoving activities.

SOIL & WATER 3: The project owner shall obtain approval from the RWQCB for a revised National Pollutant Discharge Elimination System (NPDES) permit that incorporates the proposed MBPP prior to site mobilization. The project owner shall comply with all provisions of the revised NPDES permit. The project owner shall notify the Energy Commission CPM of any proposed changes to this permit, including any application for permit renewal.

Verification: Prior to site mobilization, the project owner shall submit to the Energy Commission CPM a copy of the NPDES permit.

SOIL & WATER 4: Prior to any grading activities at the power plant site, the project owner shall obtain a grading permit as required by the City of Morro Bay Public Services Department.

Verification: Thirty days prior to any clearing or grading activity, the project owner will submit written verification that they have received a grading permit from the City of Morro Bay Public Services Department.

SOIL&WATER 5: The project owner shall obtain all necessary permits/ approvals from the United States Army Corps of Engineers (404 and Section 10), CCRWQCB (401 Certification), and the City of Morro Bay Public Services Department (Development and Grading Permits) for the proposed bridge construction activities. The project owner shall comply with all permit provisions set forth by the aforementioned agencies.

Verification: No later than thirty days prior to earth moving and construction activities for the proposed bridge, the owner shall submit copies of the approved permits from the appropriate agencies.

SOIL & WATER 6: The project owner shall have an environmental professional (as defined by the American Society for Testing and Materials practice E 1527-97 Standard Practice for Phase I Environmental Site Assessments) available for consultation during excavation activities. If potentially contaminated groundwater is encountered during excavation at the proposed site as evidenced by discoloration, odor, or other signs, prior to any further construction activity at that location, the environmental professional shall inspect the site, determine the need for sampling to confirm the nature and extent of contamination, and file a written report to the project owner and the CPM stating the recommended course of action. If, in the opinion of the environmental professional, significant remediation may be required, the project owner shall contact representatives of the CCRWQCB for guidance and possible oversight. Similar requirements regarding proper management of contaminated soils is provided in the **Waste Management** section of the PSA

Verification: At least 60 days prior to the start of construction the project owner shall provide the CPM with the name and qualifications of the selected environmental professional for approval, and a work plan which details the procedures which will be used to address any contaminated groundwater, should it be encountered during construction for approval. This work plan will identify how the project owner will address any adverse impacts and the mitigation measures to be used to render them less than significant. Should contaminated ground water be encountered, the project owner will notify the CPM in writing within 5 days of any reports filed by the environmental professional, and indicate if any contamination has been determined to be present.

SOIL & WATER 7: Prior to the start of demolition and construction, the project owner shall develop a soil and groundwater sampling plan to identify and characterize contamination below the fuel oil Tank Farm. The sampling will be performed after the tanks have been removed to facilitate access directly beneath the fuel oil tanks. The work plan shall be prepared by a Registered Geologist or Professional Engineer experienced with soil and groundwater investigations and clean up. The plan shall include sampling methodology,

laboratory testing and a schedule for submitting a report of findings, conclusions and recommendations. A similar requirement related to the existing power structure and stacks has been provided in the **Waste Management** section of the PSA.

Verification: At least 60 days prior to the start of demolition, the project owner shall submit to the CPM, for approval, the work plan. The plan shall also identify the geologist(s) or engineer(s) assigned to the project. The submittal should include a statement that CPM approval is needed. The CPM will approve or disapprove of the work plan and will notify the project owner of its findings within 15 days of receipt of the submittal.

SOIL & WATER 8: Prior to earthmoving activities in the Tank Farm or Beach Valve Area, the project owner shall submit a work plan for excavating, handling and disposing of contaminated soil or groundwater, if encountered. The plan shall include methods to monitor for contamination, worker protection, and the qualifications, duties and authority of the responsible individual.

Verification: At least 30 days prior to the start of initial earthmoving activities, the project owner shall submit to the CPM, for approval, the work plan. Approval for the earthmoving and excavation must be received from the CPM prior to initiating work.

SOIL & WATER 9: Prior to the start of any project-related construction activities, the project owner shall ensure that the City of Morro Bay, RWQCB and the responsible party for the MTBE contamination are notified of increased groundwater use. The plant wells shall be equipped with operational flow meters and totalizers to quantify short-term and long-term groundwater pumping.

Verification: At least thirty (30) days prior to the start of construction, the project owner shall submit to the CPM, for review and approval, a statement that identifies a contact list for each of the three parties and that the supply wells have been equipped with flow meters. At least fifteen (15) days prior to the start of construction the project owner shall submit to the CPM a statement that the three parties have been notified. The project owner shall meter and record all groundwater flow throughout the 6-year construction, demolition and site restoration schedule as well as the operation of the proposed MBPP. Results of the flow record will be submitted to the CPM quarterly.

SOIL & WATER 10: The project owner shall continue to perform quarterly water quality testing of the supply wells for MTBE. Other water quality testing currently performed by the Mutual Water Company as required for small, non-community systems, shall be continued.

Verification: The project owner shall continue to submit MTBE test results with a brief report quarterly to the RWQCB and the CPM. The report will identify all test results, water quality trends and recommendations, as appropriate, to protect workers and the environment in the event MTBE reaches the plant wells.

SOIL & WATER 11: The project owner shall include in the facility closure plan a description regarding the facility closure activity's potential to impact soil and water resources, including requirements and procedures for destruction and capping the wells. The conditions for closure will be determined when a facility closure plan is submitted to the CPM twelve months prior to closure of the facility.

Verification: Twelve months prior to facility closure the project owner shall submit a facility closure plan to the CPM for review and approval.

REFERENCES

Boucher, Bill and Clyde Ganes. 2001. City of Morro Bay Public Services Department. Conversation with James Thurber, California Energy Commission, April 26, 2001.

California Department of Water Resources. 1972. Seawater Intrusion: Morro Bay Area, San Luis Obispo County, Bulletin 63-6.

CCRWQCB (Central Coast Regional Water Quality Control Board/Briggs) 2001a. Transmittal from CCRWQCB/Briggs to DUKE/Hoffman RE Morro Bay Power Plant Discharge, dated April 11, 2001. Submitted to the California Energy Commission on April 18, 2001.

City of Morro Bay 2000x. Final Pre-Application Recommendations and Proposed Environmental Thresholds of Significance for Duke Morro Bay Power Plant, dated June 26, 2000. Submitted to the California Energy Commission on April 13, 2001.

Cleath and Associates, 1994, Analysis and Recommendations for a Water Management Plan, Appendix B: Ground Water Analysis, 47 pages.

DUKE (Duke Energy Morro Bay LLC) 2000a. Application for Certification, Volumes !a-1b, II-IV, Morro Bay Power Plant Project (00-AFC-12). Submitted to the California Energy Commission on October 23, 2000.

DUKE (Duke Energy Morro Bay LLC) 2001x. Morro Bay Power Plant Modernization Project Thermal Discharge Assessment Report. Draft report issued February 28, 2001.

DUKE (Duke Energy Morro Bay LLC) 2001x. Morro Bay Power Plant Modernization Project Draft 316(b) Assessment. Prepared by Tenera Environmental Services, February 28, 2001.

DUKE (Duke Energy Morro Bay LLC) 2000j. Data Adequacy Responses to the CEC Comments on the Morro Bay Power Plant AFC, dated and submitted to the California Energy Commission on December 8, 2000.

EPRI Report, Technical Evaluation of the Utility of Intake Approach Velocity as an Indicator of Potential Adverse Environmental Impact under Clean Water Act Section 316(b), December 2000.

EPRI Report, Fish Protection at Cooling Water Intakes, December 1999.

Haltiner, J. and Thor, D. 1991. Sedimentation Processes in Morro Bay, California. Sedimentation and Physical Processes, ASCE Coastal Sediment Conference, Seattle, WA pp. 7-1.1 to 7.1-21.

Jay, D. A. 2001. The Morro Bay Power Plant and Circulation Processes in Morro Bay. Report prepared for Duke Energy North America. !5 March 2001.

Miller Brooks Environmental, Inc., 2001a, Initial Response Plan – Shell-Branded Service Station, 1840 Main Street, Morro Bay, California.

Miller Brooks Environmental, Inc., 2001b, Work Group – Shell-Branded Service Station, 1840 Main Street, Morro Bay, California, April 24, 2001 Meeting at Central Coast Regional Water Quality Control Board.

Muallem, Ted and Bruce Eisenbise. 2001. Duke Fluor Daniels. Conversation with Joe Crea, California Energy Commission, April 20, 2001.

PG&E (Pacific Gas and Electric Co.) 1997a. Phase One Environmental Site Assessment, Morro Bay Power Plant, April 1997

PG&E (Pacific Gas and Electric Co.) 1997b. Phase Two Environmental Site Assessment, Vol. I, July 1997

PG&E (Pacific Gas and Electric Co.) 1997c. Phase Two Environmental Site Assessment, Vol. II, July 1997

PG&E (Pacific Gas and Electric Co.) 1997d. Phase Two Environmental Site Assessment, Vol. III, July 1997

Parker & Associates, 2000, in Duke 2000j, Historic Resource Evaluation of the Morro Bay Power Plant Property, for TRC Environmental, 15 pages.

Rohrer, Jon. 2001. Komex. E-mail communication with Kae Lewis, California Energy Commission, May 17, 2001.

Southern California Edison, San Onofre Nuclear Generating Station Fish Behavioral Study, September 22, 2000.

Tetra Tech. 1999. Morro Bay National Estuary Program Sediment Loading Study, Lafayette, CA.

Thomas, Michael. 2001. Water Quality Control Engineer for the Central Coast Regional Water Quality Control Board. Conversation with Dominique Brocard, California Energy Commission, April 2001.

USGS (United States Geologic Survey). 2001. http://waterdata.usgs.gov. Page viewed by Joe Crea, May 11, 2001.

White, James. 2001. Duke/Fluor Daniel. Conversation with James Thurber, California Energy Commission, April 25, 2001.

WORKER SAFETY AND FIRE PROTECTION

Alvin J. Greenberg, Ph.D. and Rick Tyler

INTRODUCTION

Worker safety and fire protection is legislated by laws, ordinances, regulations, and standards (LORS), and enforced through regulations codified at the Federal, State, and local levels. Worker safety is of utmost priority at the project location and is documented through worker safety practices and training. Industrial workers at the facility operate process equipment and handle hazardous materials daily and may face hazards that can result in accidents and serious injury. Protection measures are employed to either eliminate these hazards or minimize the risk through special training, protective equipment or procedural controls.

The purpose of this analysis is to assess the worker safety and fire protection measures proposed by the Morro Bay Power Plant Project and to determine whether the applicant has proposed adequate measures to:

- comply with applicable safety LORS;
- protect the workers during construction and operation of the facility;
- protect against fire; and
- provide adequate emergency response procedures.

LAWS, ORDINANCES, REGULATIONS AND STANDARDS (LORS)

FEDERAL

In December 1970 Congress enacted Public Law 91-596, the Federal Occupational Safety and Health Act of 1970. This Act mandates safety requirements in the workplace and is found in Title 29 of the United States Code, § 651 (29 U.S.C. §§ 651 through 678). Implementing regulations are codified at Title 29 of the Code of Federal Regulations, under General Industry Standards §§ 1910.1 - 1910.1500 and clearly define the procedures for promulgating regulations and conducting inspections to implement and enforce safety and health procedures to protect workers, particularly in the industrial sector. Most of the general industry safety and health standards now in force under this OSH Act represent a compilation of materials from existing federal standards and national consensus standards. These include standards from the voluntary membership organizations of the American National Standards Institute (ANSI) and the National Fire Protection Association (NFPA) which publishes the National Fire Codes.

The purpose of the Occupational Safety and Health Act is to “assure so far as possible every working man and woman in the nation safe and healthful working conditions and to preserve our human resources,” (29 USC § 651). The Federal Department of Labor promulgates and enforces safety and health standards that are applicable to all businesses affecting interstate commerce. The Department of

Labor established the Occupational Safety and Health Administration (OSHA) in 1971 to discharge the responsibilities assigned by the OSH Act.

Applicable Federal requirements include:

- 29 U.S. Code § 651 et seq. (Occupational Safety and Health Act of 1970);
- 29 CFR §1910.1 - 1910.1500 (Occupational Safety and Health Administration Safety and Health Regulations);
- 29 CFR §1952.170 – 1952.175 (Federal approval of California's plan for enforcement of its own Safety and Health requirements, in lieu of most of the Federal requirements found in 29 CFR §1910.1 – 1910.1500).

STATE

California passed the Occupational Safety and Health Act of 1973 ("Cal/OSHA") as published in the California Labor Code § 6300. Regulations promulgated as a result of the Act are codified at Title 8 of the California Code of Regulations, beginning with §337-560 and continuing with §1514 through 8568. The California Labor Code requires that the Cal/OSHA Standards Board adopt standards at least as effective as the federal standards (Labor Code § 142.3(a)) and thus all Cal/OSHA health and safety standards meet or exceed the Federal requirements. Hence, California obtained federal approval of its State health and safety regulations, in lieu of the federal requirements published at 29 CFR §1910.1 - 1910.1500). The Federal Secretary of Labor, however, continually oversees California's program and will enforce any federal standard for which the State has not adopted a Cal/OSHA counterpart.

The State of California Department of Industrial Relations is charged with responsibility for administering the Cal/OSHA plan. The Department of Industrial Relations is further split into six divisions to oversee, among other activities: industrial accidents, occupational safety and health, labor standards enforcement, statistics and research, and the State Compensation Insurance Fund (workers compensation).

Employers are responsible for informing their employees about workplace hazards, potential exposure and the work environment (Labor Code § 6408). Cal/OSHA's principal tool in ensuring that workers and the public are informed is the Hazard Communication standard first adopted in 1981 (8 CCR §5194). This regulation was promulgated in response to California's Hazardous Substances Information and Training Act of 1980. It was later revised to mirror the Federal Hazard Communication Standard (29 CFR §1910.1200) which established on the federal level an employee's "right to know" about chemical hazards in the workplace, but added the provision of applicability to public sector employers. A major component of this regulation is the required provision of Material Safety Data Sheets (MSDSs) to workers. MSDSs provide information on the identity, toxicity, and precautions to take when using or handling hazardous materials in the workplace.

Finally, 8 CCR §3203 requires that employers establish and maintain a written Injury and Illness Prevent Program to identify workplace hazards and communicate them to its employees through a formal employee-training program.

Applicable State requirements include:

- 8 CCR §339 - List of hazardous chemicals relating to the Hazardous Substance Information and Training Act;
- 8 CCR §337, et seq. Cal/OSHA regulations;
- 24 CCR § 3, et seq. - incorporates the current addition of the Uniform Building Code;
- Health and Safety Code § 25500, et seq. - Risk Management Plan requirements for threshold quantity of listed acutely hazardous materials at the facility;
- Health and Safety Code § 25500 - 25541 - Hazardous Material Business Plan detailing emergency response plans for hazardous materials emergency at the facility.

LOCAL

The California Building Standards Code published at Title 24 of the California Code of Regulations § 3 et seq is comprised of eleven parts containing the building design and construction requirements relating to fire and life safety and structural safety. The Building Standards Code includes the electrical, mechanical, energy, and fire codes applicable to the project. Local planning/building & safety departments enforce the California Uniform Building Code.

National Fire Protection Association (NFPA) standards are published in the California Fire Code. The fire code contains general provisions for fire safety, including but not restricted to: 1) required road and building access; 2) water supplies; 3) installation of fire protection and life safety systems; 4) fire-resistive construction; 5) general fire safety precautions; 6) storage of combustible materials; 7) exits and emergency escapes; and 8) fire alarm systems. The California Fire Code reflects the body of regulations published at Part 9 of Title 24 (H&S Code §18901 et seq.) pertaining to the California Fire Code.

Similarly, the Uniform Fire Code (UFC) Standards, a companion publication to the California Fire Code, contains standards of the American Society for Testing and Materials and the NFPA. It is the United State's premier model fire code. It is updated annually as a supplement and published every third year by the International Fire Code Institute to include all approved code changes in a new edition.

Applicable local (or locally enforced) requirements include:

- 1998 Edition of California Fire Code and all applicable NFPA standards (24 CCR Part 9);

- California Building Code Title 24, California Code of Regulations (24 CCR § 3, et seq.).
- Uniform Fire Code, 1997

SETTING

The Morro Bay Power Plant is located in the City of Morro Bay in San Luis Obispo County. The existing plant is located west of Highway 1, near the Morro Bay Harbor and east of Estero Bay. The area includes mixed land use including light industry, commercial establishments and marine, recreational and residential neighborhoods. The proposed project will be situated wholly within the confines of an existing and active power generating facility and as such, fire protection systems and worker safety programs already exist and are in place. Fire support services to the site will be under the jurisdiction of the Morro Bay Fire Department. The Morro Bay Fire Department consists of two stations, of which only the station at 715 Harbor Street is manned. This station is approximately one mile away from MBPP and thus is the closest station to the site and is assigned as the off-site first responder to the Morro Bay Power Plant. The response time is estimated to be 3 minutes (MBFD 2001).

The Morro Bay Fire Department is also assigned as the off-site hazardous materials first responder for the Morro Bay Power Plant. As first responder, MBFD would assess the need for backup by the San Luis Obispo County Hazardous Materials Team. The County Hazmat team is a multi-agency team with 12-18 personnel from County and City Fire Departments with equipment strategically located in the County (MBFD 2001). This team has 24-hour hazardous materials spill response capability. The response time of the County Hazmat team is unknown, depending upon the availability and location of the team members at the time of a hazmat incident. There are personnel in MBFD who serve on the County Hazmat Team. The County Fire Department maintains a Hazmat trailer at San Luis City Fire Department Station #1 (CFD 2001).

IMPACTS

WORKER SAFETY

Industrial environments are potentially dangerous, during both construction and operation of facilities. Workers at the proposed project will be exposed to loud noises, moving equipment, trenches, and confined space entry and egress problems. The workers may experience falls, trips, burns, lacerations, and numerous other injuries. They have the potential to be exposed to falling equipment or structures, chemical spills, hazardous waste, fires, explosions, and electrical sparks and electrocution. It is important for the Morro Bay Power Plant Project to have well-defined policies and procedures, training, and hazard recognition and control at their facility to minimize such hazards and protect workers. If the facility complies with all LORS, workers will be adequately protected from health and safety hazards.

FIRE HAZARDS

During construction and operation of the proposed Morro Bay Power Plant Project there is the potential for both small fires and major structural fires. Electrical sparks, combustion of fuel oil, natural gas or flammable liquids, explosions, and over-heated equipment, may cause small fires. Major structural fires may develop from uncontrolled fires or be caused by large explosions of natural gas or other flammable gasses or liquids. Compliance with all LORS will be adequate to assure protection from all fire hazards.

CUMULATIVE IMPACTS

Staff reviewed the potential for the construction and operation of Morro Bay Power Plant Project, combined with existing industrial facilities, to result in impacts on the fire and emergency service capabilities of the Morro Bay Fire Department and found that cumulative impacts were insignificant.

APPLICANT'S PROPOSED MITIGATION

WORKER SAFETY

A Safety and Health Program will be prepared by the applicant to minimize worker hazards during construction and operation. Staff uses the phrase "Safety and Health Program" to refer to the measures that will be taken to ensure compliance with the applicable LORS during the construction and operational phases of the project.

CONSTRUCTION SAFETY AND HEALTH PROGRAM

The Morro Bay Project encompasses construction and operation of a natural gas fired facility with ancillary facilities such as transmission lines and pipelines. Workers will be exposed to hazards typical of construction and operation of a gas-fired combined cycle facility.

Construction Safety Orders are published at 8 CCR § 1502, et seq. These requirements are promulgated by Cal/OSHA and are applicable to the construction phase of the project. The Construction Safety and Health Program will include the following:

- Construction Injury and Illness Prevention Program (8 CCR § 1509);
- Construction Fire Protection and Prevention Plan (8 CCR § 1920); and
- Personal Protective Equipment Program (8 CCR §§ 1514 - 1522).

Additional programs under General Industry Safety Orders (8 CCR §§ 3200 - 6184), Electrical Safety Orders (8 CCR §§2299 - 2974) and Unfired Pressure Vessel Safety Orders (8 CCR §§ 450 - 544) will include:

- Electrical Safety Program;
- Unfired Pressure Vessel Safety Orders;

- Equipment Safety Program;
- Forklift Operation Program;
- Excavation/Trenching Program;
- Fall Prevention Program;
- Scaffolding/Ladder Safety Program;
- Articulating Boom Platforms Program;
- Crane and Material Handling Program;
- Housekeeping and Material Handling and Storage Program;
- Hot Work Safety Program;
- Respiratory Protection Program;
- Employee Exposure Monitoring Program;
- Confined Space Entry Program;
- Hand and Portable Power Tool Safety Program;
- Hearing Conservation Program;
- Back Injury Prevention Program;
- Hazard Communication Program;
- Air Monitoring Program;
- Heat and Cold Stress Monitoring and Control Program; and
- Pressure Vessel and Pipeline Safety Program.

The AFC includes adequate outlines of each of the above programs. Prior to construction of the Morro Bay Power Plant project, detailed programs and plans will be provided pursuant to the condition of certification **WORKER SAFETY-1**.

OPERATIONS AND MAINTENANCE SAFETY AND HEALTH PROGRAM

Upon completion of construction and prior to operations at the Morro Bay Power Plant Project, the Operations and Maintenance Safety and Health Program will be prepared. This operational safety program will include the following programs and plans:

- Injury and Illness Prevention Program (8 CCR § 3203);
- Emergency Action Plan (8 CCR § 3220);
- Hazardous Materials Management Program;
- Operations and Maintenance Safety Program;
- Fire Protection and Prevention Program (8 CCR § 3221); and
- Personal Protective Equipment Program (8 CCR §§ 3401-3411).

In addition, the requirements under General Industry Safety Orders (8 CCR §§ 3200 - 6184), Electrical Safety Orders (8 CCR §§2299 - 2974) and Unfired Pressure Vessel Safety Orders (8 CCR §§ 450 - 544) will be applicable to the project. Written safety programs, which the applicant will develop, for the Morro Bay Power Plant Project will ensure compliance with the above-mentioned requirements.

The AFC includes adequate outlines of the Safety Training Matrix (AFC Table 6.17-1), Facility Emergency Plan (AFC Table 6.17-3), and the Construction Health and Safety Program (AFC Table 6.17-4). Prior to operation of the Morro Bay Power Plant Project, all detailed programs and plans will be provided pursuant to condition of certification **WORKER SAFETY-2**.

SAFETY AND HEALTH PROGRAM ELEMENTS

The Applicant provided the proposed outlines for both a Construction Safety and Health Program and an Operation Safety and Health Program. The measures in these plans are derived from applicable sections of state and federal law. The major items required in both Safety and Health Programs are as follows:

INJURY AND ILLNESS PREVENTION PROGRAM (IIPP)

The Applicant will submit an expanded Construction and Operations Illness and Injury Prevention Program to Cal/OSHA for review and comment 30 days prior to both construction and operation of the project.

The IIPP will include the following components as presented in the AFC:

- Identity of person(s) with authority and responsibility for implementing the program;
- System ensuring employees comply with safe and healthy work practices;
- System facilitating employer-employee communications;
- Procedures identifying and evaluating workplace hazards, including inspections to identify hazards and unsafe conditions;
- Methods for correcting unhealthy/unsafe conditions in a timely manner;
- Methods of documenting inspections and training and for maintaining records; and
- A training program for:
- introducing the program;
- new, transferred, or promoted employees;
- new processes and equipment;
- supervisors;
- contractors.

EMERGENCY ACTION PLAN

California regulations require an Emergency Action Plan (8 CCR § 3220). The AFC contains a satisfactory outline for an emergency action plan (Table 6.17-3).

The outline lists the following features:

- Purpose and Scope of Emergency Action Plan;
- Personnel Responsibilities during Emergencies;
- Specific Response Procedures;
- Evacuation Plan;
- Emergency Equipment Locations;
- Fire Extinguisher Locations;
- Site Security;
- Accident Reporting and Investigation;
- Lockout/Tagout;
- Hazard Communication;
- Spill Containment and Reporting;
- First Aid and Medical Response;
- Respiratory Protection;
- Personal Protective Equipment;
- Sanitation; and
- Work Site Inspections.

FIRE PREVENTION PLAN

California Code of Regulations requires an Operations Fire Prevention Plan (8 CCR § 3221). The AFC describes a proposed fire prevention plan which is acceptable to staff. The plan will include the following topics:

- Responsibilities;
- Procedures for fire control;
- Fixed and Portable fire-fighting equipment;
- Housekeeping;
- Employee alarm/communication practices;
- Servicing and refueling areas;
- Training; and
- Flammable and combustible liquid storage.

Staff proposes that the Applicant submit a final Fire Protection and Prevention Plan to the California Energy Commission Compliance Project Manager (CPM) and the Morro Bay Fire Department for review and approval to satisfy proposed conditions of certification **WORKER SAFETY 1** and **2**.

PERSONAL PROTECTIVE EQUIPMENT PROGRAM

California regulations require Personal Protective Equipment (PPE) and first aid supplies whenever hazards are encountered which, due to process, environment, chemicals or mechanical irritants can cause injury or impair bodily function as a result of absorption, inhalation or physical contact (8 CCR § 3380-3400). The Morro Bay Power Plant Project operational environment will likely require PPE.

Information provided in the AFC indicates that all employees required to use PPE will be checked for proper fit and to see if they are medically capable of wearing the equipment. All safety equipment will meet NIOSH or ANSI standards and will carry markings, numbers, or certificates of approval. Respirators will meet NIOSH and California Department of Health and Human Services Standards. Each employee will be provided with the following information pertaining to the protective clothing and equipment:

- Proper use, maintenance, and storage;
- When the protective clothing and equipment are to be used;
- Benefits and limitations; and
- When and how the protective clothing and equipment are to be replaced.

The PPE Program ensures that employers comply with the applicable requirements for PPE and provide employees with the information and training necessary to implement the program.

OPERATIONS AND MAINTENANCE WRITTEN SAFETY PROGRAM

In addition to the specific plans listed above, there are additional LORS applicable to the project, which are called “safe work practices”. Both the Construction and the Operations Safety Programs will address safe work practices under a variety of programs. The components of these programs include the following:

- Fall Protection Program;
- Hot Work Safety Program;
- Confined Space Entry;
- Hearing Conservation Program;
- Hazard Communication Program;
- Process Safety Management (PSM) Program; and
- Contractor Safety Program.

OPERATIONS AND MAINTENANCE SAFETY TRAINING PROGRAMS

Employees will be trained in the safe work practices described in the above-reference safety programs.

FIRE PROTECTION

Staff reviewed the information provided in the AFC regarding available fire protection services and equipment (AFC 6.17 Worker Safety) to determine if the project would adequately protect workers and if it would affect the fire protection services in the area. The project will rely on both onsite fire protection systems and local fire protection services. The onsite fire protection system provides the first line of defense for small fires. In the event of a major fire, fire support services including trained firefighters and equipment for a sustained response would be required by the Morro Bay Fire Department.

The information in the AFC indicates that the project intends to meet the minimum fire protection and suppression requirements. Elements include both fixed and portable fire extinguishing systems. The water and hose system is based on an underground firewater piping network. The on-site fire suppression water is stored in a million gallon tank onsite and a 500,000 gallon tank on a hill near the plant. This location supplies a higher head for water and serves as a source of raw and domestic water. Extensions of the existing underground firewater piping network will be installed to continue to provide water from the on-site and off-site storage tanks.

A carbon dioxide fire protection system will be provided for the combustion turbine and accessory equipment. Fire detection sensors will also be installed.

The on-site fire suppression system is designed and operated in accordance with National Fire Protection Association standards and guidelines. Fire hydrants and hose stations will be connected to the existing MBPP system already in operation. Hydrants or hose stations will be placed at approximately 300 foot intervals around the proposed facility as per NFPA 24 guidance.

In addition to the fixed fire protection system, smoke detectors, combustible gas detectors, and portable extinguishers will be located throughout the plant with size, rating, and spacing in accordance with the Uniform Fire Code.

The applicant will be required to provide the final Fire Protection and Prevention Program to staff and to the Morro Bay Fire Department, prior to construction and operation of the project, to confirm the adequacy of the proposed fire protection measures.

FACILITY CLOSURE

The project owner/operator is responsible for maintaining an operational fire protection system during closure activities. The project must also stay in compliance with all applicable health and safety LORS during that time. A facility closure plan will be developed prior to closure to incorporate these requirements.

CONCLUSION AND RECOMMENDATIONS

CONCLUSIONS

If the Applicant for the proposed Morro Bay Power Plant Project provides a Project Construction Injury and Illness Prevention Program and a Project Operations Safety and Health Program as required by conditions of certification **WORKER SAFETY 1** and **2**, staff believes that the project will incorporate sufficient measures to ensure adequate levels of industrial safety, and comply with applicable LORS. Staff also concludes that the proposed plant will not have significant impacts on local fire protection services. The proposed facility is located within an existing power plant facility that is currently served by the local fire department. The fire risks of the existing facility are similar and thus pose no new or added demands on local fire protection services.

RECOMMENDATIONS

If the Commission certifies the project, staff recommends that the Commission adopt the following proposed conditions of certification. The proposed conditions of certification provide assurance that the Construction Injury and Illness Prevention Program and the Operations Safety and Health Program proposed by the applicant will be reviewed by the appropriate agencies before implementation. The conditions also require verification that the proposed plans adequately assure worker safety and fire protection and comply with applicable LORS.

PROPOSED CONDITIONS OF CERTIFICATION

WORKER SAFETY-1 The project owner shall submit to the CPM a copy of the Project Construction Injury and Illness Prevention Program, containing the following:

- A Construction Safety Program;
- A Construction Personal Protective Equipment Program;
- A Construction Exposure Monitoring Program;
- A Construction Emergency Action Plan; and
- A Construction Fire Protection and Prevention Plan.

The Safety Program, the Personal Protective Equipment Program, and the Exposure Monitoring Program shall be submitted to the CPM for review and comment concerning compliance of the program with all applicable Safety Orders. The Construction Fire Protection and Prevention Plan and Emergency Action Plan shall be submitted to the Morro Bay Fire Department for review and comment prior to submittal to the CPM.

At least 30 days prior to the start of construction, the project owner shall submit to the CPM for review and approval a copy of the Project Construction Injury and Illness Prevention Program. The project owner shall provide a letter from the Morro Bay Fire Department stating that they have reviewed and commented on the Construction Fire Protection and Prevention Plan Emergency Action Plan.

WORKER SAFETY-2 The project owner shall submit to the CPM a copy of the Project Operations and Maintenance Safety and Health Program containing the following:

- an Operation Injury and Illness Prevention Plan;
- an Emergency Action Plan;
- Hazardous Materials Management Program;
- Operations and Maintenance Safety Program;
- Fire Protection and Prevention Program (8 CCR § 3221); and;
- Personal Protective Equipment Program (8 CCR §§ 3401-3411).

The Operation Injury and Illness Prevention Plan, Emergency Action Plan, and Personal Protective Equipment Program shall be submitted to the Cal/OSHA Consultation Service, for review and comment concerning compliance of the program with all applicable Safety Orders. The Operation Fire Protection Plan and the Emergency Action Plan shall also be submitted to the Morro Bay Fire Department for review and acceptance.

Verification: At least 30 days prior to the start of operation, the project owner shall submit to the CPM a copy of the final version of the Project Operations and Maintenance Safety & Health Program. It shall incorporate Cal/OSHA Consultation Service's comments, stating that they have reviewed and accepted the specified elements of the proposed Operations and Maintenance Safety and Health Plan.

REFERENCES

1998 California Fire Code. Published by the International Fire Code Institute comprised of the International Conference of Building Officials, the Western Fire Chiefs Association, and the California Building Standards Commission. Whittier, Ca.

Morro Bay Fire Department (MBFD). 2001. Personal communication with Jeff Jones, Fire Chief. April 6, 2001.

San Luis Obispo County Fire Department (CFD). 2001. Personal communication with Nate Herring, Fire Apparatus Engineer and member of County Hazmat team, Merician Fire Station #36. April 4, 2001.

1997 Uniform Fire Code, Vol. 1. Published by the International Fire Code Institute comprised of the International Conference of Building Officials and the Western Fire Chiefs Association, Whittier, Ca.

ENGINEERING ASSESSMENT

FACILITY DESIGN

Brian Payne

INTRODUCTION

Facility Design encompasses the civil, structural, mechanical, and electrical engineering design of the project. The purpose of the Facility Design analysis is to:

- verify that the laws, ordinances, regulations and standards (LORS) applicable to the design and construction of the project have been identified;
- verify that the project and ancillary facilities have been described in sufficient detail, including proposed design criteria and analysis methods, to provide reasonable assurance that the project can be designed and constructed in accordance with all applicable LORS, and in a manner that protects environmental quality and assures public health and safety;
- determine whether special design features should be considered during final design to deal with conditions unique to the site which could influence public health and safety or environmental protection; and
- describe the design review and construction inspection process and establish Conditions of Certification that will be used to monitor and ensure compliance with the intent of the LORS and any special design requirements.

FINDINGS REQUIRED

The Warren Alquist Act requires the commission to "prepare a written decision ….which includes…(a) Specific provisions relating to the manner in which the proposed facility is to be designed, sited, and operated in order to protect environmental quality and assure public health and safety [and] (d)(1) Findings regarding the conformity of the proposed site and related facilities…with public safety standards…and with other relevant local, regional, state and federal standards, ordinances, or laws…" (Pub. Resources Code, §25523).

SUBJECTS DISCUSSED

Subjects discussed in this analysis include:

- Identification of the LORS applicable to facility design;
- Evaluation of the applicant's proposed design criteria, including the identification of those criteria that are essential to ensuring protection of the environment and public health and safety;
- Proposed modifications and additions to the Application for Certification (AFC) that are necessary to comply with applicable LORS; and
- Conditions of Certification proposed by staff to ensure that the project will be designed and constructed to protect environmental quality and assure public health and safety and comply with all applicable LORS.

SETTING

Duke Energy Morro Bay LLC (applicant) proposes to construct and operate the new 1,200-megawatt (MW) Morro Bay Power Plant Project. This plant is proposed for construction at the existing Morro Bay Power Plant site, which is located near Morro Bay Harbor, bordered on the west by Embarcadero Road and on the east by Highway 1. This facility is proposed to include two 600 MW natural gas fired, combined cycle combustion turbine facilities. Once the new facilities have been constructed, the existing 1950's and 1960's technology power generating units 1, 2, 3, and 4 will be demolished (Duke 2000a). For more information on the site and related project description, please see **Project Description**.

The site lies in seismic zone 4, the zone of greatest seismic shaking in the United States. Additional engineering design information is presented in the Application for Certification (AFC), Volume IB, Section 8.0 and Volume IV, Appendices 8-3 through 8-8 (Duke 2000a).

LAWS, ORDINANCES, REGULATIONS AND STANDARDS (LORS)

The applicable LORS for each engineering discipline (civil, structural, mechanical and electrical) are summarized in the Section 7.2 and Table 7.1 of the AFC, Volume 1B (Duke 2000a). The following appendices, included in Volume IV of the AFC, describe the applicable LORS and design standards for each engineering discipline (Duke 2000a):

- Civil Engineering – Appendix 8-3
- Structural Engineering – Appendix 8-4
- Mechanical Engineering – Appendix 8-5
- Electrical Engineering – Appendix 8-6
- Control Systems Engineering – Appendix 8-7
- Chemical Engineering – Appendix 8-8

ANALYSIS

The basis of this analysis is the applicant's proposed analysis and construction methods and list of LORS and design criteria set forth in the AFC.

SITE PREPARATION AND DEVELOPMENT

Staff has evaluated the proposed design criteria for grading, flood protection, erosion control, site drainage, and site access. Staff has assessed the criteria for designing and constructing linear support facilities such as a short natural gas pipeline extension and electric transmission connection. The applicant proposes to use accepted industry standards, design practices, and construction methods in preparing and developing the site. (See AFC Section 7.0, Section 8.0 and Appendices 8-3 through 8-8 for a representative list of applicable government regulations, industry codes, and standards.) Staff concludes that the project,

including its linear facilities, will likely comply with all applicable site preparation LORS, and proposes Conditions of Certification (see below) to ensure compliance.

MAJOR STRUCTURES, SYSTEMS AND EQUIPMENT

Major structures, systems and equipment are defined as those structures and associated components or equipment that are necessary for power production and are costly to repair or replace, that require a long lead time to repair or replace, or that are used for the storage, containment, or handling of hazardous or toxic materials. Major structures and equipment will be identified through compliance with proposed Condition of Certification **GEN-2** (below).

The AFC contains lists of the civil, structural, mechanical and electrical design criteria that demonstrate the likelihood of compliance with applicable LORS, and that staff believes are essential to ensuring that the project is designed in a manner that protects the environment and public health and safety.

The project shall be designed and constructed to the 1998 edition of the California Building Code (CBC), and other applicable codes and standards in effect at the time design and construction of the project actually commence. In the event the initial designs are submitted to the Chief Building Official (CBO) for review and approval when the successor to the 1998 CBC is in effect, the 1998 CBC provisions, identified herein, shall be replaced with the applicable successor provisions.

Certain structures in a power plant may be required, under the CBC, to undergo dynamic lateral force (structural) analysis; others may be designed using the simpler static analysis procedure. In order to ensure that structures are analyzed using the appropriate lateral force procedure, staff has included Proposed Condition of Certification **STRUC-1** (below), which in part requires review and approval by the CBO of the project owner's proposed lateral force procedures prior to the start of construction.

NATURAL GAS PIPELINE

A short, high pressure, natural gas pipeline and some modification to the existing natural gas primary regulating station and metering station are proposed to be constructed. The new line will connect upstream of the existing primary gas regulator station at the Pacific Gas and Electric Company's site at the Morro Bay Power Plant. The existing and proposed lines will be operated and maintained in accordance with U.S. Department of Transportation (DOT), Title 49, Code of Federal Regulations (CFR) Chapter 1, Part 192 "Transportation of Natural and other Gas by Pipeline: Minimum Federal Safety Standards," and the California Public Utilities Commission, General Order 112-E (CPUC GO 112-E). Compliance with these requirements will help mitigate the impacts of pipeline rupture by ensuring proper operation and maintenance of the existing and proposed line segments. Therefore, no mitigation beyond a pipeline operated and maintained to applicable regulations is necessary.

PROJECT QUALITY PROCEDURES

Sections 8.5.2.2.5 and 8.5.2.2.6 of the AFC (Duke 2000a) summarize a Project Quality Control Program that will be used on the project to maximize confidence that

systems and components will be designed, fabricated, stored, transported, installed, and tested in accordance with the technical codes and standards appropriate for a powerplant. Compliance with design requirements will be verified through an appropriate program of inspections and audits. Employment of this Quality Control program will ensure that the project is actually designed, procured, fabricated and installed as contemplated in this analysis.

COMPLIANCE MONITORING

Under Section 104.2 of the CBC, the building official is authorized and directed to enforce all the provisions of the CBC. For all energy facilities certified by the Energy Commission, the Energy Commission is the building official and has the responsibility to enforce the code. In addition, the Energy Commission has the power to render interpretations of the CBC and to adopt and enforce rules and supplemental regulations to clarify the application of the CBC's provisions.

The Energy Commission's design review and construction inspection process is developed to conform to CBC requirements and ensure that all facility design Conditions of Certification are met. As provided by Section 104.2.2 of the CBC, the Energy Commission appoints experts to carry out the design review and construction inspections and act as delegate CBO on behalf of the Energy Commission. These delegate agents typically include the local building official and independent consultants hired to cover technical expertise not provided by the local official. The applicant, through permit fees as provided by CBC Sections 107.2 and 107.3, pays the costs of the reviews and inspections. While building permits in addition to the Energy Commission certification are not required for this project, in lieu permit fees are paid by the applicant consistent with CBC Section 107, to cover the costs of reviews and inspections.

Engineering and compliance staff will invite the local building authority, either the City of Morro Bay or San Luis Obispo County, or a private contractor, to act as CBO for the project. When an entity has been identified to perform the duties of CBO, Energy Commission staff will complete a Memorandum of Understanding (MOU) with that entity that outlines its roles and responsibilities and those of its subcontractors and delegate agents.

Staff has developed proposed Conditions of Certification to ensure protection of the environment and public health and safety and compliance with engineering design LORS. Some of these conditions address the roles, responsibilities and qualifications of the applicant's engineers responsible for the design and construction of the project (proposed Conditions of Certification **GEN-1** through **GEN-8**). Engineers responsible for the design of the civil, structural, mechanical, and electrical portions of the project are required to be registered in California, and to sign and stamp each submittal of design plans, calculations, and specifications submitted to the CBO. These conditions require that no element of construction proceed without prior approval from the CBO. They also require that qualified special inspectors be assigned to perform or oversee special inspections required by the applicable LORS.

While the Energy Commission and delegate CBO have the authority to allow some flexibility in scheduling construction activities, these conditions are written to require that no element of construction of permanent facilities, which would be difficult to reverse or correct, may proceed without prior approval of plans by the CBO. For those elements of construction that are not difficult to reverse and are allowed to proceed without approval of the plans, the applicant shall bear the responsibility to fully modify those elements of construction to comply with all design changes that result from the CBO's plan review and approval process.

FACILITY CLOSURE

The removal of a facility from service, or decommissioning, as a result of the project reaching the end of its useful life, may range from "mothballing" to removal of all equipment and appurtenant facilities and restoration of the site. Future conditions that may affect the decommissioning decision are largely unknown at this time.

In order to assure that decommissioning of the facility will be completed in a manner that is environmentally sound, safe, and will protect public health and safety, the applicant shall submit a decommissioning plan to the Energy Commission for review and approval prior to the commencement of decommissioning. The plan shall include a discussion of the following items:

- proposed decommissioning activities for the project and all appurtenant facilities constructed as part of the project;
- all applicable LORS, local/regional plans, and the conformance of the proposed decommissioning activities to the applicable LORS and local/regional plans;
- the activities necessary to restore the site if the plan requires removal of all equipment and appurtenant facilities; and
- decommissioning alternatives, other than complete site restoration.

The above requirements should serve as adequate protection, even in the unlikely event of project abandonment. Staff has proposed general conditions (see **General Conditions**) to ensure that these measures are included in the Facility Closure Plan.

RESPONSE TO PUBLIC AND AGENCY COMMENTS

There have been no public or agency comments relative to **Facility Design**.

CONCLUSIONS AND RECOMMENDATIONS

CONCLUSIONS

1. The laws, ordinances, regulations, and standards (LORS) identified in the AFC and supporting documents are those applicable to the project.

2. Staff has evaluated the proposed engineering LORS, design criteria and design methods in the record, and concludes that the design, construction and eventual closure of the project are likely to comply with applicable LORS.
3. The Conditions of Certification proposed will ensure that the proposed facilities are designed and constructed in accordance with applicable LORS. This will occur through the use of design review, plan checking and field inspections, which are to be performed by the CBO or other Energy Commission delegate agent. Staff will audit the CBO to ensure satisfactory performance.
4. The Energy Commission design review and construction inspection process will be in place for the project and will allow construction to start as scheduled if the project is certified. The process will provide the necessary reviews to ensure compliance with applicable facility design LORS and Conditions of Certification.
5. Whereas future conditions that may affect decommissioning are largely unknown at this time, it can reasonably be concluded that if the project owner submits a decommissioning plan as required in the General Conditions portion of this document prior to the commencement of decommissioning, the decommissioning procedure is likely to occur in compliance with all applicable LORS.

RECOMMENDATIONS

Energy Commission staff recommends that:

1. The Conditions of Certification proposed herein be adopted to ensure that the project is designed and constructed to protect environmental quality, to assure public health and safety, and to ensure compliance with all applicable engineering LORS;
2. The project be designed and built to the 1998 CBC (or successor standard, if such is in effect when the initial project engineering designs are submitted for review); and
3. The CBO shall review the final designs, conduct plan checking and perform field inspections during construction, and Energy Commission staff shall audit and monitor the CBO to ensure satisfactory performance.

CONDITIONS OF CERTIFICATION

GEN-1 The project owner shall design, construct and inspect the project in accordance with the 1998 California Building Code (CBC) and all other applicable LORS in effect at the time initial design plans are submitted to the CBO for review and approval. (The CBC in effect is that edition that has been adopted by the California Building Standards Commission and published at least 180 days previously.) All transmission facilities (lines, switchyards, switching stations, and substations) are handled in Conditions of Certification TSE-1, TSE-2 and TSE-3 in the **Transmission System Engineering** Section of this document.

Protocol: In the event that the initial engineering designs are submitted to the CBO when a successor to the 1998 CBC is in effect, the 1998 CBC provisions identified herein shall be replaced with the applicable successor provisions. Where, in any specific case, different sections of the code specify different materials, methods of construction, or other requirements, the most restrictive shall govern. Where there is a conflict between a general requirement and a specific requirement, the specific requirement shall govern.

Verification: Within 30 days after receipt of the Certificate of Occupancy, the project owner shall submit to the California Energy Commission Compliance Project Manager (CPM) a statement of verification, signed by the responsible design engineer, attesting that all designs, construction, installation and inspection requirements of the applicable LORS and the Energy Commission's Decision have been met in the area of facility design. The project owner shall provide the CPM a copy of the Certificate of Occupancy within 30 days of receipt from the CBO [1998 CBC, Section 109 – Certificate of Occupancy].

GEN-2 Prior to submittal of the initial engineering designs for CBO review, the project owner shall furnish to the CPM and to the CBO a schedule of facility design submittals, a Master Drawing List, and a Master Specifications List. The schedule shall contain a list of proposed submittal packages of designs, calculations, and specifications for major structures and equipment. To facilitate audits by Energy Commission staff, the project owner shall provide specific packages to the CPM when requested.

Verification: At least 60 days (or a lesser number of days mutually agreed to by the project owner and the CBO) prior to the start of rough grading, the project owner shall submit to the CBO and to the CPM the schedule, the Master Drawing List, and the Master Specifications List of documents to be submitted to the CBO for review and approval. These documents shall be the pertinent design documents for the major structures and equipment listed in **Table 1** below. Major structures and equipment shall be added to or deleted from the Table only with CPM approval. The project owner shall provide schedule updates in the Monthly Compliance Report.

Table 1: Major Structures and Equipment List

Equipment/System	Quantity (Plant)
Combustion Turbine Generator Foundation and Connections	4
Steam Turbine Generator Foundation and Connections	2
Heat Recovery Steam Generator (HRSG) Structure, Foundation and Connections	4
Auxiliary Transformer Foundation and Connections	4
CT Inlet Air Plenum Structure, Foundation and Connections	4
HRSG Exhaust Stack, Foundation and Connections	4
Isolated Phase Bus Duct	4
HRSG Transition Duct from CTG — Structure	4
Electrical/Control Center	4
Condenser Structure, Foundation and Connections	2
Feed Water Pump Foundation and Connections	8
Condensate Pump Foundation and Connections	4
Air Compressor Foundation and Connections	2
CT Static Starter Skid Foundation and Connections	4
CT Mechanical Accessory Compartment Foundation and Connections	4
Switchgear Equipment Building Structure, Foundation and Connections	4
CT Generator Step-up Transformer Foundation and Connections	4
ST Generator Step-up Transformer Foundation and Connections	2
Condensate Pump Foundation and Connections	4
Circulating Water Pump Foundation and Connections	8
Fuel Gas Filter/Separator Foundation and Connections	4
ST Lube Oil Package Foundation and Connections	2
Air Receiver Foundation and Connections	2
Demineralized Water Package Foundation and Connections	1
Demineralized Water Pump Foundation and Connections	2
Demineralized Water Tank and Foundation	1

GEN-3 The project owner shall make payments to the CBO for design review, plan check and construction inspection based upon a reasonable fee schedule to be negotiated between the project owner and the CBO. These fees may be consistent with the fees listed in the 1998 CBC [Chapter 1, Section 107 and Table 1-A, Building Permit Fees; Appendix Chapter 33, Section 3310 and Table A-33-A, Grading Plan Review Fees; and Table A-33-B, Grading Permit Fees], adjusted for inflation and other appropriate adjustments; may be based on the value of the facilities reviewed; may be

based on hourly rates; or may be as otherwise agreed by the project owner and the CBO.

Verification: The project owner shall make the required payments to the CBO in accordance with the agreement between the project owner and the CBO. The project owner shall send a copy of the CBO's receipt of payment to the CPM in the next Monthly Compliance Report indicating that the applicable fees have been paid.

GEN-4 Prior to the start of rough grading, the project owner shall assign a California registered architect, structural engineer or civil engineer, as a resident engineer (RE), to be in general responsible charge of the project [Building Standards Administrative Code (Cal. Code Regs., tit. 24, § 4-209, Designation of Responsibilities).] All transmission facilities (lines, switchyards, switching stations, and substations) are handled in Conditions of Certification TSE-1, TSE-2 and TSE-3 in the **Transmission System Engineering** Section of this document.

The RE may delegate responsibility for portions of the project to other registered engineers. Registered mechanical and electrical engineers may be delegated responsibility for mechanical and electrical portions of the project respectively. A project may be divided into parts, provided each part is clearly defined as a distinct unit. Separate assignment of general responsible charge may be made for each designated part.

Protocol: The RE shall:

1. Monitor construction progress of work requiring CBO design review and inspection to ensure compliance with LORS;
2. Ensure that construction of all the facilities subject to CBO design review and inspection conforms in every material respect to the applicable LORS, these Conditions of Certification, approved plans, and specifications;
3. Prepare documents to initiate changes in the approved drawings and specifications when directed by the project owner or as required by conditions on the project;
4. Be responsible for providing the project inspectors and testing agency(ies) with complete and up-to-date set(s) of stamped drawings, plans, specifications and any other required documents;
5. Be responsible for the timely submittal of construction progress reports to the CBO from the project inspectors, the contractor, and other engineers who have been delegated responsibility for portions of the project; and
6. Be responsible for notifying the CBO of corrective action or the disposition of items noted on laboratory reports or other tests as not conforming to the approved plans and specifications.

The RE shall have the authority to halt construction and to require changes or remedial work, if the work does not conform to applicable requirements.

If the RE or the delegated engineers are reassigned or replaced, the project owner shall submit the name, qualifications and registration number of the newly assigned engineer to the CBO for review and approval. The project owner shall notify the CPM of the CBO's approval of the new engineer.

Verification: At least 30 days (or a lesser number of days mutually agreed to by the project owner and the CBO) prior to the start of rough grading, the project owner shall submit to the CBO for review and approval, the name, qualifications and registration number of the RE and any other delegated engineers assigned to the project. The project owner shall notify the CPM of the CBO's approvals of the RE and other delegated engineer(s) within five days of the approval.

If the RE or the delegated engineer(s) are subsequently reassigned or replaced, the project owner has five days in which to submit the name, qualifications, and registration number of the newly assigned engineer to the CBO for review and approval. The project owner shall notify the CPM of the CBO's approval of the new engineer within five days of the approval.

GEN-5 Prior to the start of rough grading, the project owner shall assign at least one of each of the following California registered engineers to the project: A) a civil engineer; B) a geotechnical engineer or a civil engineer experienced and knowledgeable in the practice of soils engineering; C) a design engineer, who is either a structural engineer or a civil engineer fully competent and proficient in the design of powerplant structures and equipment supports; D) a mechanical engineer; and E) an electrical engineer. [California Business and Professions Code section 6704 et seq., and sections 6730 and 6736 requires state registration to practice as a civil engineer or structural engineer in California.] All transmission facilities (lines, switchyards, switching stations, and substations) are handled in Conditions of Certification TSE-1, TSE-2 and TSE-3 in the **Transmission System Engineering** Section of this document.

The tasks performed by the civil, mechanical, electrical or design engineers may be divided between two or more engineers, as long as each engineer is responsible for a particular segment of the project (e.g., proposed earthwork, civil structures, powerplant structures, equipment support). No segment of the project shall have more than one responsible engineer. The transmission line may be the responsibility of a separate California registered electrical engineer.

Protocol: The project owner shall submit to the CBO for review and approval, the names, qualifications and registration numbers of all engineers assigned to the project [1998 CBC, Section 104.2, Powers and Duties of Building Official].

Protocol: If any one of the designated engineers is subsequently reassigned or replaced, the project owner shall submit the name, qualifications and registration number of the newly assigned engineer to the

CBO for review and approval. The project owner shall notify the CPM of the CBO's approval of the new engineer.

Protocol: A: The civil engineer shall:

1. Design, or be responsible for design, stamp, and sign all plans, calculations, and specifications for proposed site work, civil works, and related facilities requiring design review and inspection by the CBO. At a minimum, these include: grading, site preparation, excavation, compaction, construction of secondary containment, foundations, erosion and sedimentation control structures, drainage facilities, underground utilities, culverts, site access roads, and sanitary sewer systems; and
2. Provide consultation to the RE during the construction phase of the project, and recommend changes in the design of the civil works facilities and changes in the construction procedures.

Protocol: B: The geotechnical engineer or civil engineer, experienced and knowledgeable in the practice of soils engineering, shall:

1. Review all the engineering geology reports, and prepare final soils grading report;
2. Prepare the soils engineering reports required by the 1998 CBC, Appendix Chapter 33, Section 3309.5 – Soils Engineering Report, and Section 3309.6 – Engineering Geology Report;
3. Be present, as required, during site grading and earthwork to provide consultation and monitor compliance with the requirements set forth in the 1998 CBC, Appendix Chapter 33, section 3317, Grading Inspections;
4. Recommend field changes to the civil engineer and RE;
5. Review the geotechnical report, field exploration report, laboratory tests, and engineering analyses detailing the nature and extent of the site soils that may be susceptible to liquefaction, rapid settlement or collapse when saturated under load; and
6. Prepare reports on foundation investigation to comply with the 1998 CBC, Chapter 18 section 1804, Foundation Investigations.

This engineer shall be authorized to halt earthwork and to require changes; if site conditions are unsafe or do not conform with predicted conditions used as a basis for design of earthwork or foundations [1998 CBC, section 104.2.4, Stop orders].

Protocol: C: The design engineer shall:

1. Be directly responsible for the design of the proposed structures and equipment supports;
2. Provide consultation to the RE during design and construction of the project;
3. Monitor construction progress to ensure compliance with LORS;
4. Evaluate and recommend necessary changes in design; and
5. Prepare and sign all major building plans, specifications and calculations.

Protocol: D: The mechanical engineer shall be responsible for, and sign and stamp a statement with, each mechanical submittal to the CBO, stating that the proposed final design plans, specifications, and calculations conform with all of the mechanical engineering design requirements set forth in the Energy Commission's Decision.

Protocol: E: The electrical engineer shall:

1. Be responsible for the electrical design of the project; and
2. Sign and stamp electrical design drawings, plans, specifications, and calculations.

Verification: At least 30 days (or a lesser number of days mutually agreed to by the project owner and the CBO) prior to the start of rough grading, the project owner shall submit to the CBO for review and approval, the names, qualifications and registration numbers of all the responsible engineers assigned to the project. The project owner shall notify the CPM of the CBO's approvals of the engineers within five days of the approval.

If the designated responsible engineer is subsequently reassigned or replaced, the project owner has five days in which to submit the name, qualifications, and registration number of the newly assigned engineer to the CBO for review and approval. The project owner shall notify the CPM of the CBO's approval of the new engineer within five days of the approval.

GEN-6 Prior to the start of an activity requiring special inspection, the project owner shall assign to the project, qualified and certified special inspector(s) who shall be responsible for the special inspections required by the 1998 CBC, Chapter 17, Section 1701, Special Inspections, Section, 1701.5 Type of Work (requiring special inspection), and Section 106.3.5, Inspection and observation program. All transmission facilities (lines, switchyards, switching stations, and substations) are handled in Conditions of Certification TSE-1, TSE-2 and TSE-3 in the **Transmission System Engineering** Section of this document.

Protocol: The special inspector shall:

1. Be a qualified person who shall demonstrate competence, to the satisfaction of the CBO, for inspection of the particular type of construction requiring special or continuous inspection;
2. Observe the work assigned for conformance with the approved design drawings and specifications;
3. Furnish inspection reports to the CBO and RE. All discrepancies shall be brought to the immediate attention of the RE for correction, then, if uncorrected, to the CBO and the CPM for corrective action; and
4. Submit a final signed report to the RE, CBO, and CPM, stating whether the work requiring special inspection was, to the best of the inspector's knowledge, in conformance with the approved plans and specifications and the applicable provisions of the applicable edition of the CBC.

A certified weld inspector, certified by the American Welding Society (AWS), and/or American Society of Mechanical Engineers (ASME) as applicable, shall inspect welding performed on-site requiring special inspection (including structural, piping, tanks and pressure vessels).

Verification: At least 15 days prior to the start of an activity requiring special inspection, the project owner shall submit to the CBO for review and approval, with a copy to the CPM, the name(s) and qualifications of the certified weld inspector(s), or other certified special inspector(s) assigned to the project to perform one or more of the duties set forth above. The project owner shall also submit to the CPM a copy of the CBO's approval of the qualifications of all special inspectors in the next Monthly Compliance Report.

If the special inspector is subsequently reassigned or replaced, the project owner has five days in which to submit the name and qualifications of the newly assigned special inspector to the CBO for approval. The project owner shall notify the CPM of the CBO's approval of the newly assigned inspector within five days of the approval.

GEN-7 The project owner shall keep the CBO informed regarding the status of engineering and construction. If any discrepancy in design and/or construction is discovered, the project owner shall document the discrepancy and recommend the corrective action required. The discrepancy documentation shall be submitted to the CBO for review and approval. The discrepancy documentation shall reference this Condition of Certification and, if appropriate, the applicable sections of the CBC and/or other LORS.

Verification: The project owner shall transmit a copy of the CBO's approval of any corrective action taken to resolve a discrepancy to the CPM in the next Monthly Compliance Report. If any corrective action is disapproved, the project owner shall advise the CPM, within five days, of the reason for disapproval, and the revised corrective action to obtain CBO's approval.

GEN-8 The project owner shall obtain the CBO's final approval of all completed work that has undergone CBO design review and approval. The project owner shall request the CBO to inspect the completed structure and review the submitted documents. When the work and the "as-built" and "as graded" plans conform to the approved final plans, the project owner shall notify the CPM regarding the CBO's final approval. The marked up "as-built" drawings for the construction of structural and architectural work shall be submitted to the CBO. Changes approved by the CBO shall be identified on the "as-built" drawings [1998 CBC, Section 108, Inspections].

Verification: Within 15 days of the completion of any work, the project owner shall submit to the CBO, with a copy to the CPM in the next Monthly Compliance Report, (a) a written notice that the completed work is ready for final inspection, and (b) a signed statement that the work conforms to the final approved plans.

GEN-9 The project owner shall file a closure/decommissioning plan with Los Angeles County and the City of El Segundo for review and comment, and the CPM for review and approval, at least 12 months (or other time mutually agreed to by the project owner and the CPM) prior to commencing the closure activities. If the project is abandoned before construction is completed, the project owner shall return the site to its original condition.

Protocol: The closure plan shall include a discussion of the following:

1. The proposed closure/decommissioning activities for the project and all appurtenant facilities constructed as part of the project;
2. All applicable LORS, all local/regional plans, and a discussion of the conformance of the proposed decommissioning activities to the applicable LORS and local/regional plans;
3. Activities necessary to restore the site if the MVPP decommissioning plan requires removal of all equipment and appurtenant facilities; and
4. Closure/decommissioning alternatives, other than complete restoration of the site.

Verification: At least 12 months (or other period of time mutually agreed to by the project owner and the CPM) prior to closure or decommissioning activities, the project owner shall file a copy of the closure/decommissioning plan with Los Angeles County and the City of El Segundo for review and comment, and the CPM for review and approval. Prior to the submittal of the closure plan, a meeting shall be held between the project owner and the CPM for discussing the specific contents of the plan.

CIVIL-1 Prior to the start of site grading, the project owner shall submit to the CBO for review and approval the following:

1. Design of the proposed drainage structures and the grading plan;
2. An erosion and sedimentation control plan;

3. Related calculations and specifications, signed and stamped by the responsible civil engineer; and
4. Soils report as required by the 1998 CBC [Appendix Chapter 33, Section 3309.5, Soils Engineering Report and Section 3309.6, Engineering Geology Report].

Verification: At least 15 days prior to the start of site grading (or a lesser number of days mutually agreed to by the project owner and the CBO), the project owner shall submit the documents described above to the CBO for review and approval. In the next Monthly Compliance Report following the CBO's approval, the project owner shall submit a written statement certifying that the documents have been approved by the CBO.

CIVIL-2 The resident engineer shall, if appropriate, stop all earthworks and construction in the affected areas when the responsible geotechnical engineer or civil engineer experienced and knowledgeable in the practice of soils engineering identifies unforeseen adverse soil or geologic conditions. The project owner shall submit modified plans, specifications and calculations to the CBO based on these new conditions. The project owner shall obtain approval from the CBO before resuming earthwork and construction in the affected area [1998 CBC, Section 104.2.4, Stop orders].

Verification: The project owner shall notify the CPM, within five days, when earthwork and construction is stopped as a result of unforeseen adverse geologic/soil conditions. Within five days of the CBO's approval to resume earthwork and construction in the affected areas, the project owner shall provide to the CPM a copy of the CBO's approval.

CIVIL-3 The project owner shall perform inspections in accordance with the 1998 CBC, Chapter 1, Section 108, Inspections; Chapter 17, Section 1701.6, Continuous and Periodic Special Inspection; and Appendix Chapter 33, Section 3317, Grading Inspection. All plant site grading operations for which a grading permit is required shall be subject to inspection by the CBO.

Protocol: If, in the course of inspection, it is discovered that the work is not being performed in accordance with the approved plans, the discrepancies shall be reported immediately to the resident engineer, the CBO, and the CPM. The project owner shall prepare a written report detailing all discrepancies and non-compliance items, and the proposed corrective action, and send copies to the CBO and the CPM.

Verification: Within five days of the discovery of any discrepancies, the resident engineer shall transmit to the CBO and the CPM a Non-Conformance Report (NCR), and the proposed corrective action. Within five days of resolution of the NCR, the project owner shall submit the details of the corrective action to the CBO and the CPM. A list of NCRs, for the reporting month, shall also be included in the following Monthly Compliance Report.

CIVIL-4 After completion of finished grading and erosion and sedimentation control and drainage facilities, the project owner shall obtain the CBO's approval of the final "as-graded" grading plans, and final "as-built" plans for the erosion and sedimentation control facilities [1998 CBC, Section 109, Certificate of Occupancy].

Verification: Within 30 days of the completion of the erosion and sediment control mitigation and drainage facilities, the project owner shall submit to the CBO the responsible civil engineer's signed statement that the installation of the facilities and all erosion control measures were completed in accordance with the final approved combined grading plans, and that the facilities are adequate for their intended purposes. The project owner shall submit a copy of this report to the CPM in the next Monthly Compliance Report.

STRUC-1 Prior to the start of any increment of construction of any major structure or component listed in Table 1 of Condition of Certification **GEN-2**, above, the project owner shall submit to the CBO for review and approval the proposed lateral force procedures for project structures and the applicable designs, plans and drawings for project structures. Proposed lateral force procedures, designs, plans and drawings shall be those for the following items (from Table 1, above):

1. Major project structures;
2. Major foundations, equipment supports and anchorage;
3. Large field fabricated tanks;
4. Turbine/generator pedestal; and
5. Switchyard structures.

Construction of any structure or component shall not commence until the CBO has approved the lateral force procedures to be employed in designing that structure or component.

Protocol: The project owner shall:

1. Obtain approval from the CBO of lateral force procedures proposed for project structures;
2. Obtain approval from the CBO for the final design plans, specifications, calculations, soils reports, and applicable quality control procedures. If there are conflicting requirements, the more stringent shall govern (i.e., highest loads, or lowest allowable stresses shall govern). All plans, calculations, and specifications for foundations that support structures shall be filed concurrently with the structure plans, calculations, and specifications [1998 CBC, Section 108.4, Approval Required];
3. Submit to the CBO the required number of copies of the structural plans, specifications, calculations, and other required documents of the designated major structures at least 90 days (or a lesser number of days

mutually agreed to by the project owner and the CBO) prior to the start of on-site fabrication and installation of each structure, equipment support, or foundation [1998 CBC, Section 106.4.2, Retention of plans and Section 106.3.2, Submittal documents]; and

4. Ensure that the final plans, calculations, and specifications clearly reflect the inclusion of approved criteria, assumptions, and methods used to develop the design. The final designs, plans, calculations and specifications shall be signed and stamped by the responsible design engineer [1998 CBC, Section 106.3.4, Architect or Engineer of Record].

Verification: At least 30 days (or a lesser number of days mutually agreed to by the project owner and the CBO) prior to the start of any increment of construction of any structure or component listed in Table 1 of Condition of Certification **GEN-2**, above the project owner shall submit to the CBO, with a copy to the CPM, the responsible design engineer's signed statement that the final design plans, specifications and calculations conform with all of the requirements set forth in the Energy Commission's Decision.

If the CBO discovers non-conformance with the stated requirements, the project owner shall resubmit the corrected plans to the CBO within 20 days of receipt of the nonconforming submittal with a copy of the transmittal letter to the CPM.
The project owner shall submit to the CPM a copy of a statement from the CBO that the proposed structural plans, specifications, and calculations have been approved and are in conformance with the requirements set forth in the applicable LORS.

STRUC-2 The project owner shall submit to the CBO the required number of sets of the following:

1. Concrete cylinder strength test reports (including date of testing, date sample taken, design concrete strength, tested cylinder strength, age of test, type and size of sample, location and quantity of concrete placement from which sample was taken, and mix design designation and parameters);
2. Concrete pour sign-off sheets;
3. Bolt torque inspection reports (including location of test, date, bolt size, and recorded torques);
4. Field weld inspection reports (including type of weld, location of weld, inspection of non-destructive testing (NDT) procedure and results, welder qualifications, certifications, qualified procedure description or number (ref: AWS); and;
5. Reports covering other structural activities requiring special inspections shall be in accordance with the 1998 CBC, Chapter 17, Section 1701, Special Inspections, Section 1701.5, Type of Work (requiring special inspection), Section 1702, Structural Observation and Section 1703, Nondestructive Testing.

Verification: If a discrepancy is discovered in any of the above data, the project owner shall, within five days, prepare and submit an NCR describing the nature of the discrepancies to the CBO, with a copy of the transmittal letter to the CPM. The NCR shall reference the Condition(s) of Certification and the applicable CBC chapter and section. Within five days of resolution of the NCR, the project owner shall submit a copy of the corrective action to the CBO and the CPM.
The project owner shall transmit a copy of the CBO's approval or disapproval of the corrective action to the CPM within 15 days. If disapproved, the project owner shall advise the CPM, within five days, the reason for disapproval, and the revised corrective action to obtain CBO's approval.

STRUC-3 The project owner shall submit to the CBO design changes to the final plans required by the 1998 CBC, Chapter 1, Section 106.3.2, Submittal documents, and Section 106.3.3, Information on plans and specifications, including the revised drawings, specifications, calculations, and a complete description of, and supporting rationale for, the proposed changes, and shall give the CBO prior notice of the intended filing.

Verification: On a schedule suitable to the CBO, the project owner shall notify the CBO of the intended filing of design changes, and shall submit the required number of sets of revised drawings and the required number of copies of the other above-mentioned documents to the CBO, with a copy of the transmittal letter to the CPM. The project owner shall notify the CPM, via the Monthly Compliance Report, when the CBO has approved the revised plans.

STRUC-4 Tanks and vessels containing quantities of toxic or hazardous materials exceeding amounts specified in Chapter 3, Table 3-E of the 1998 CBC shall, at a minimum, be designed to comply with Occupancy Category 2 of the 1998 CBC.

Verification: At least 30 days (or a lesser number of days mutually agreed to by the project owner and the CBO) prior to the start of installation of the tanks or vessels containing the above specified quantities of toxic or hazardous materials, the project owner shall submit to the CBO for review and approval final design plans, specifications, and calculations, including a copy of the signed and stamped engineer's certification.

The project owner shall send copies of the CBO approvals of plan checks to the CPM in the following Monthly Compliance Report. The project owner shall also transmit a copy of the CBO's inspection approvals to the CPM in the Monthly Compliance Report following completion of any inspection.

MECH-1 Prior to the start of any increment of major piping construction, the project owner shall submit, for CBO review and approval, the proposed final design, specifications and calculations for each plant major piping system. (Major piping is defined here as piping other than domestic water, plumbing and refrigeration systems, and small bore piping, i.e., piping and tubing with a diameter less than two and one-half inches.) The submittal shall also include the applicable QA/QC procedures. Upon completion of construction of any

such major piping system, the project owner shall request the CBO's inspection approval of said construction [1998 CBC, Section 106.3.2, Submittal documents, Section 108.3, Inspection Requests].

Protocol: The responsible mechanical engineer shall submit a signed and stamped statement to the CBO when the proposed final design, specifications and calculations for all of the major piping systems subject to the CBO review and approval have been designed, fabricated and installed in accordance with all applicable ordinances, regulations, laws and industry standards [Section 106.3.4, Architect or Engineer of Record], including but not limited to:

American National Standards Institute (ANSI) B31.1 (Power Piping Code);
ANSI B31.2 (Fuel Gas Piping Code);
ANSI B31.3 (Chemical Plant and Petroleum Refinery Piping Code);
ANSI B31.8 (Gas Transmission and Distribution Piping Code); and
Specific City/County code.

The CBO may deputize inspectors to carry out the functions of the code enforcement agency [1998 CBC, Section 104.2.2, Deputies].

Verification: At least 30 days (or a lesser number of days mutually agreed to by the project owner and the CBO) prior to the start of any increment of major piping construction, the project owner shall submit to the CBO for approval, with a copy of the transmittal letter to the CPM, the above listed documents for that increment of construction of major piping systems. The project owner shall transmit a copy of the CBO's inspection approvals to the CPM in the Monthly Compliance Report following completion of any inspection.

MECH-2 For all pressure vessels installed in the plant, the project owner shall submit to the CBO and California Occupational Safety and Health Administration (Cal-OSHA), prior to operation, the code certification papers and other documents required by the applicable LORS. Upon completion of the installation of any pressure vessel, the project owner shall request the appropriate CBO and/or Cal-OSHA inspection of said installation [1998 CBC, Section 108.3 – Inspection Requests].

Protocol: The project owner shall:

1. Ensure that all boilers and fired and unfired pressure vessels are designed, fabricated and installed in accordance with the appropriate section of the American Society of Mechanical Engineers (ASME) Boiler and Pressure Vessel Code, or other applicable code. Vendor certification, with identification of applicable code, shall be submitted for prefabricated vessels and tanks; and
2. Have the responsible design engineer submit a statement to the CBO that the proposed final design plans, specifications and calculations

conform to all of the requirements set forth in the appropriate ASME Boiler and Pressure Vessel Code or other applicable codes.

Verification: At least 30 days (or a lesser number of days mutually agreed to by the project owner and the CBO) prior to the start of on-site fabrication or installation of any pressure vessel, the project owner shall submit to the CBO for review and approval, final design plans, specifications and calculations, including a copy of the signed and stamped engineer's certification, with a copy of the transmittal letter to the CPM.

The project owner shall transmit to the CPM, in the Monthly Compliance Report following completion of any inspection, a copy of the transmittal letter conveying the CBO's and/or Cal-OSHA inspection approvals.

MECH-3 Prior to the start of construction of any heating, ventilating, air conditioning (HVAC) or refrigeration system, the project owner shall submit to the CBO for review and approval the design plans, specifications, calculations and quality control procedures for that system. Packaged HVAC systems, where used, shall be identified with the appropriate manufacturer's data sheets.

Protocol: The project owner shall design and install all HVAC and refrigeration systems within buildings and related structures in accordance with the CBC and other applicable codes. Upon completion of any increment of construction, the project owner shall request the CBO's inspection and approval of said construction. The final plans, specifications and calculations shall include approved criteria, assumptions and methods used to develop the design. In addition, the responsible mechanical engineer shall sign and stamp all plans, drawings and calculations and submit a signed statement to the CBO that the proposed final design plans, specifications and calculations conform with the applicable LORS [1998 CBC, Section 108.7, Other Inspections; Section 106.3.4, Architect or Engineer of Record].

Verification: At least 30 days (or a lesser number of days mutually agreed to by the project owner and the CBO) prior to the start of construction of any HVAC or refrigeration system, the project owner shall submit to the CBO the required HVAC and refrigeration calculations, plans and specifications, including a copy of the signed and stamped statement from the responsible mechanical engineer certifying compliance with the CBC and other applicable codes, with a copy of the transmittal letter to the CPM.

The project owner shall transmit to the CPM, in the Monthly Compliance Report following completion of any inspection, a copy of the transmittal letter conveying the CBO's inspection approvals.

MECH-4 Prior to the start of each increment of plumbing construction, the project owner shall submit for CBO's approval the final design, specifications and calculations for all plumbing systems, potable water systems, drainage systems (including sanitary drain and waste), toilet rooms, building energy conservation systems, and temperature control and ventilation systems,

including water and sewer connection permits issued by the local agency. Upon completion of any increment of construction, the project owner shall request the CBO's inspection approval of said construction [1998 CBC, Section 108.3, Inspection Requests; Section 108.4, Approval Required: 1998 California Plumbing Code, Section 103.5.4, Inspection Request; Section 301.1.1, Approval].

Protocol: The project owner shall design, fabricate and install:

1. Plumbing, potable water, all drainage systems, and toilet rooms in accordance with Title 24, California Code of Regulations, Part 5 (the California Plumbing Code); and
2. Building energy conservation systems and temperature control and ventilation systems in accordance with Title 24, California Code of Regulations, Part 6 (the California Energy Code).

The final design, specifications and calculations shall clearly reflect the inclusion of approved criteria, assumptions and methods used to develop the design. In addition, the responsible mechanical engineer shall stamp and sign all plans, drawings and calculations and submit a signed statement to the CBO that the proposed final design plans, specifications and calculations conform with all of the applicable LORS.

Verification: At least 30 days (or a lesser number of days mutually agreed to by the project owner and the CBO) prior to the start of construction of any of the above systems, the project owner shall submit to the CBO the final design, specifications and calculations, including a copy of the signed and stamped statement from the responsible mechanical engineer certifying compliance with the applicable edition of the CBC, and send the CPM a copy of the transmittal letter in the next Monthly Compliance Report.

The project owner shall transmit to the CPM, in the Monthly Compliance Report following completion of any inspection, a copy of the transmittal letter conveying the CBO's inspection approvals.

ELEC-1 For the 480 volts and higher systems, the project owner shall not begin any increment of electrical construction until plans for that increment have been approved by the CBO. These plans, together with design changes and design change notices, shall remain on the site for one year after completion of construction. The project owner shall request that the CBO inspect the installation to ensure compliance with the requirements of applicable LORS [1998 CBC, Section 108.4, Approval Required, and Section 108.3, Inspection Requests]. All transmission facilities (lines, switchyards, switching stations, and substations) are handled in Conditions of Certification TSE-1, TSE-2 and TSE-3 in the **Transmission System Engineering** Section of this document.

Protocol: The following activities shall be reported in the Monthly Compliance Report:

- receipt or delay of major electrical equipment; and
- testing or energization of major electrical equipment.

Verification: At least 30 days (or a lesser number of days mutually agreed to by the project owner and the CBO) prior to the start of each increment of electrical construction, the project owner shall submit to the CBO for review and approval the final design plans, specifications and calculations for electrical equipment and systems 480 volts and greater, including a copy of the signed and stamped statement from the responsible electrical engineer attesting compliance with the applicable LORS, and send the CPM a copy of the transmittal letter in the next Monthly Compliance Report.

ELEC-2 The project owner shall submit to the CBO the required number of copies of items A and B for review and approval and one copy of item C [CBC 1998, Section 106.3.2, Submittal documents]. All transmission facilities (lines, switchyards, switching stations, and substations) are handled in Conditions of Certification TSE-1, TSE-2 and TSE-3 in the **Transmission System Engineering** Section of this document.

Protocol: A. Final plant design plans to include:

1. one-line diagrams for the 13.8 kV, 4.16 kV and 480 V systems;
2. system grounding drawings;
3. general arrangement or conduit drawings; and
4. other plans as required by the CBO.

Protocol: B. Final plant calculations to establish:

1. short-circuit ratings of plant equipment;
2. ampacity of feeder cables;
3. voltage drop in feeder cables;
4. system grounding requirements;
5. coordination study calculations for fuses, circuit breakers and protective relay settings for the 13.8 kV, 4.16 kV and 480 V systems;
6. system grounding requirements;
7. lighting energy calculations; and
8. other reasonable calculations as customarily required by the CBO.

Protocol: C. A signed statement by the registered electrical engineer certifying that the proposed final design plans and specifications conform to requirements set forth in the Energy Commission Decision.

Verification: At least 30 days (or a lesser number of days mutually agreed to by the project owner and the CBO) prior to the start of each increment of electrical equipment installation, the project owner shall submit to the CBO for review and approval the final design plans, specifications and calculations, for electrical equipment and systems 480 volts and greater enumerated above, including a copy of the signed and stamped statement from the responsible electrical engineer certifying compliance with the applicable LORS. The project owner shall send the CPM a copy of the transmittal letter in the next Monthly Compliance Report.

REFERENCES

Duke (Duke Energy Morro Bay LLC) 2000a. Application for Certification, Volumes 1a-1b, II-IV, Morro Bay Power Plant Project (00-AFC-12). Submitted to the California Energy Commission, October 23, 2000.

GEOLOGY AND PALEONTOLOGY

Neal Mace

INTRODUCTION

The geology and paleontology section discusses the setting of the Duke Energy of North America's (DUKE) Morro Bay Power Project and its potential impacts regarding geological hazards, geological and paleontological resources, and surface water hydrology. The purpose of this analysis is to verify that the applicable laws, ordinances, regulations, and standards (LORS) have been identified and that the project can be designed and constructed in accordance with all applicable LORS, and in a manner that protects environmental quality and assures public health and safety. Energy Commission staff's objective is to ensure that there will be no significant adverse impacts to significant geological and paleontological resources, and surface water hydrology during project construction, operation and closure. The section concludes with the staff's proposed monitoring and mitigation measures with respect to geological hazards, geological and paleontological resources, and surface water hydrology, with the inclusion of nine conditions of certification.

LAWS, ORDINANCES, REGULATIONS AND STANDARDS

The applicable LORS are listed in the Application for Certification (AFC), in Sections 7.2.1, 7.4.5 and 7.4.8 (DUKE 2000a). A brief description of the LORS for geological hazards and resources, surface water hydrology, and paleontological resources follows.

FEDERAL

There are no federal LORS for geological hazards and resources, or grading and erosion control. The Morro Bay Power Project is not located on lands owned by the United States Government.

STATE AND LOCAL

The California Building Code (CBC) 1998 edition is based upon the Uniform Building Code (UBC), 1997 edition, which was published by the International Conference of Building Officials. The CBC is a series of standards that are used for investigation, design (Chapters 16 and 18) and construction (including grading and erosion control as found in Appendix Chapter 33). The CBC supplements the UBC's grading and construction ordinances and regulations.

The California Environmental Quality Act (CEQA) Guidelines, Appendix G, provides a checklist of questions that a lead agency should normally address if relevant to a project's environmental impacts.

- Section (V) (c) asks if the project will directly or indirectly destroy a unique paleontological resource or site or unique geological feature.

- Section (VI) (a), (b), (c), (d), and (e) pose questions that are focused on whether or not the project would expose persons or structures to geological hazards.
- Section (X) (a) and (b) pose questions about the project's effect on mineral resources.

The Standard Procedures, Measures for Assessment and Mitigation of Adverse Impacts to Non-renewable Paleontologic Resources (SVP 1994) are a set of procedures and standards for assessing and mitigating impacts to vertebrate paleontological resources. They were adopted in October 1994 by a national organization of vertebrate paleontologists (the Society of Vertebrate Paleontologists).

ENVIRONMENTAL SETTING

The Morro Bay Power Project is a proposed 1200-megawatt combined cycle generation, combustion turbine facility to be located at the existing Morro Bay Power Plant site. The proposed improvements will be located within the area currently occupied by the onsite tank farm, at the northern end of the power plant site. The new facility will utilize the existing natural gas supply line. The project modifications to the existing natural gas facilities include:

- Short extensions of pipeline from PG&E's onsite pressure regulating station to the combined-cycle combustion turbines.
- Onsite gas compression enhancements to support needed gas pressure requirements for combined-cycle operation.
- Meter modification to meet pressure requirements.

The Morro Bay Power Plant facility is located in at the northern end of Morro Bay, approximately 2000 feet east of Morro Rock. Morro Bay Power Plant site is located on a low lying coastal terrace. Morro Creek (located immediately north of the Morro Bay Power Plant site) has incised a channel into the terrace. The channel was subsequently filled with fluvial sediments. At the site of the proposed combustion turbine facility, the coastal terrace is also blanketed by dune sand, estuarine deposits and hydraulic fill.

The hydraulic fill unit was dredged from Morro Bay and placed on the tidal flats by the United States Navy in 1941 and 1942 (DUKE, 2000a). The fill unit averages 8 feet in thickness and raised the elevation of the tidal flats and power plant site to about 15 to 20 feet above sea level.

At the project site, the coastal terrace is underlain by bedrock of the Franciscan Formation at elevations of –50 to –80 feet (mean sea level datum). Morro Rock comprises a Tertiary age intrusive igneous rock composed of dacite.

No indications of surface faulting were observed at the site during the site visit. In addition, no known active faults cross the Morro Bay Power Project footprint.

ANALYSIS AND IMPACTS

GEOLOGICAL HAZARDS

FAULTING AND SEISMICITY

Energy Commission staff reviewed the California Division of Mines and Geology publication "Fault Activity Map of California and Adjacent Areas with Locations and Ages of Recent Volcanic Eruptions," dated 1994 (CDMG, 1994). No active or potentially active faults are known to cross the power plant footprint. The project is located within Seismic Zone 4 as delineated on Figure 16-2 of the 1998 edition of the CBC. The closest known active fault is the Los Osos fault, which is located 8 kilometers south of the project site. The Los Osos fault is a 56 to 60 kilometer long, west northwest trending, southwest dipping reverse fault that separates the San Luis Range from the Morro Bay structural basin. It is designated as a class "B" fault under the CBC (a fault with a maximum magnitude earthquake greater than 6.5 and less than 7 and a slip rate of less than 5 mm/year). The maximum moment magnitude earthquake for the Los Osos fault is a magnitude 6.8 event.

In addition, the Hosgri fault is located approximately 17.5 kilometers offshore and the San Andreas fault is located approximately 66 kilometers northeast of the Morro Bay Power Plant. Both the Hosgri and San Andreas faults are north northwest trending, right lateral, strike slip faults. The Hosgri fault is part of an offshore system of right lateral strike slip faults that extend from Point Arguello to the San Francisco Bay Area. The maximum moment magnitudes for the Hosgri and San Andreas faults are 7.3 (DUKE, 2000a) and 7.8 (CDMG, 1996), respectively.

The applicant performed both deterministic and probabilistic analyses of the peak ground accelerations at the site. The deterministic analysis used Blake's EQFAULT program (1989) to determine peak ground accelerations at the project site resulting from maximum magnitude events on the San Juan, Los Osos, Hosgri, Rinconada, and San Andreas faults. Because of its proximity to the Morro Bay site, the Los Osos is the most critical fault. The applicant calculated a peak ground acceleration at the Morro Bay Power Plant site of 0.33g associated with a magnitude 6.8 earthquake on the Los Osos fault (DUKE, 2000a).

The probabilistic analysis was performed by the applicant's geotechnical consultant, Hushmand Associates (Hushmand Associates, 2000a). They used the Abrahamson-Silva (1997), Campbell (1997) and Sadigh (1997) attenuation relationships to calculate peak ground accelerations at the Morro Bay Power Plant site for the Design Basis Earthquake and Upper Bound Earthquakes. These events are defined by the 1997 UBC as having probabilities of exceedance of 10 percent in 50 years and 10 percent in 100 years, respectively. The peak ground acceleration associated with the Design Basis Earthquake is 0.30g. The peak ground acceleration associated with the Upper Bound Earthquake is 0.39g. The peak ground acceleration associated with the Design Basis Earthquake (0.30g) will be used for design of the project facilities (DUKE, 2001).

These values are generally consistent with the California Division of Mines and Geology (CDMG) Map Sheet 48, which predicts a peak ground acceleration with a 10 percent chance of exceedance in 50 years of between 0.3 and 0.4g for the project area.

On February 22, 2001 Energy Commission staff visited the project location and did not observe any evidence of surface faulting. The potential of surface rupture on a fault at the power plant footprint is considered to be very low, since no active faults are known to have ruptured the ground surface of the project site.

LIQUEFACTION, HYDROCOMPACTION, AND EXPANSIVE SOILS

Liquefaction is a condition in which a cohesionless soil loses its shear strength due to a sudden increase in pore water pressure. The distribution of potentially liquefiable soils correlates to areas where the top of bedrock is below sea level. The soils most prone to liquefaction during earthquakes are fine-grained, poorly graded, saturated sands and silts.

One of the most serious liquefaction hazards results when a competent soil overlies deeper liquefiable soil layers. Liquefaction of the deeper layers may result in substantial lateral spreading or sliding of the upper competent soil along the liquefied layer. Lateral spreading can occur along slopes as shallow as two percent, extend several hundred feet back from a slope, and produce displacements of tens of feet if soil conditions are favorable and earthquake shaking is of sufficient duration. Lateral spreading is particularly likely in the vicinity of unlined stream and river channels or other sloping locations. Damage induced by lateral spreading and liquefaction is generally most severe when liquefaction occurs within 15 to 20 feet of the ground surface. Lateral spreading was responsible for most of the pipeline failures in San Francisco during the 1989 Loma Prieta Earthquake.

During the geotechnical investigation, the depth to groundwater beneath the proposed site generally varied from approximately 4 feet below existing grade to 14 feet below existing grade (Hushmand Associates, 2000a). The sand dune deposits, fluvial deposits and hydraulic fill beneath the site all contain layers and lenses of saturated, loose, sand and silt. The combination of saturated soils of varying density and a potential for a moderately high peak horizontal ground accelerations at the site points to a potential for liquefaction at the site. Hushmand Associates (2000a) used blow counts, or n-values, from their bore hole logs and cone penetrometer sounding data to analyze the liquefaction potential of the site during an upper bound earthquake, i.e. an earthquake that produces a peak ground acceleration at the site of 0.39g. They concluded that localized liquefaction could occur in unconsolidated sand layers up to several feet in thickness, which could result in several inches of settlement. As a result, their report recommends the use of pile foundations for "relatively heavy structures" (Hushmand Associates, 2000a).

The potential for liquefaction induced lateral spreading within the soils beneath most of the site is considered low because of the low surface gradients at the project site and the heterogeneous nature of the liquefiable soils. Liquefiable zones

do not appear to be continuous over distances of more than a few feet to a few tens of feet. However, lateral spreading may occur immediately adjacent to the Morro Creek channel. Liquefaction and lateral spreading are to be accounted for during the final design of the project's foundation.

Hydrocompaction is the process of the loss of soil volume upon the application of water. The soils at the site are dense enough and are relatively saturated so that hydrocompaction is not considered to be a significant problem.

Soils that contain a high percentage of expansive clay minerals are prone to expansion, if subjected to an increase in water content. Expansive soils are usually measured with an index test such as the expansive index potential. In order for a soil to be a candidate for testing, the soil must have a high clay content and the clay must have a high shrink-swell potential and a high plasticity index. Based on the site investigations, clayey estuarine soil layers are present at depths of 15 to 70 feet below the ground surface. Several of these soil layers are classified as high plasticity clay (Hushmand, 2000a). However, at these depths, the estuarine deposits are saturated. As a result, the potential for damage to the project facilities from expansive soils is expected to be low.

TSUNAMI

Seismic waves, or tsunamis, can be triggered by earthquakes or undersea landslides. Tsunamis are particularly dangerous if the tsunami occurs at high tide. The National Oceanic and Atmospheric Administration (NOAA) is currently producing a tsunami inundation map for the Morro Bay area, however, it is not yet available (DUKE, 2001). Tsunamis occurred in the Morro Bay area in 1878, 1946, 1953, 1960, and 1964. The NOAA Tsunami Database describes a maximum runup of 1.5 meters, with some unsubstantiated reports of a 2.4 meter runup due to the tsunami on April 1, 1946 (DUKE, 2001). These tsunamis resulted in localized damage to piers, wharves, and buoys in Morro Bay Harbor (DUKE, 2000a). The ground surface elevation at the proposed site is 15 to 23 feet (4.6 to 7.1 meters) above mean sea level. Consequently historic tsunamis have not inundated the proposed project site.

SLOPE FAILURES

Landsliding potential at the power plant site is considered to be low, since the project is located on coastal terrace that has a slope of between 1 and 2 %, and there are no slopes adjacent to the site except at the edge of Morro Creek. The Morro Creek channel appears to be far enough from the project site that slope failures within banks of the channel will not impact the levees surrounding the site. The stability of the levees surrounding the site could potentially be impacted during a 100-year flood event. The stability of the levees is to be accounted for during final design of the project.

GEOLOGICAL AND PALEONTOLOGICAL RESOURCES

No significant sand and gravel resources of the quality required to produce Portland cement concrete have been identified in the project area (DUKE, 2001). No other significant mineralogical resources are known to exist in the project area.
Fran Govean, PhD (1999), conducted a paleontological resource assessment of the Morro Bay Power Plant site. The paleontological assessment included both an archival record search from the University of California, Berkeley, Museum of Paleontology and a field survey of the project site on February 1, 1999 (Govean, 1999).

The archival search did not reveal any fossil localities in the immediate project area. During the field survey Dr. Govean noted several pieces of broken bivalves within the disturbed sandy soils that form the berms at the proposed project site. Dr. Govean concluded that the shell fragments were not in situ and were likely of modern origin. No fossil remains were observed (Govean, 1999).

Artificial fill, Quaternary Alluvium, Older Quaternary Dune Sands, and Recent Dune Sands underlie the Morro Bay Power Plant site. Dr. Govean (1999) concluded that since these sediments are geologically very young and the proposed expansion site footprint was highly disturbed during the construction of the original Morro Bay Power Project, the proposed project site has a low paleontologic sensitivity. As a result, no significant paleontological resources are expected to be encountered during construction of the project.

SITE SPECIFIC IMPACTS

Excavations, drilling, clearing and brushing operations, and grading of the fill and alluvium at the power plant site associated with construction of the project are considered to present a low potential impact to paleontological resources. At the time that this document was prepared, the site was not known to contain any fossils. The adoption and implementation of the proposed conditions of certification for paleontological resources should mitigate any potential impacts to paleontological resources, should such resources be encountered during construction of this project.

The discussion of the potential impacts with respect to water quality, including the impacts on turbidity and temperature, is found in the **Soils and Water Resources** section of this document. Flooding and storm water run-off are proposed to be managed through the proposed power plant's drainage control plan and by complying with the proposed conditions of certification for the **Soils and Water Resources** section of this document.

None of the geological and paleontological resources, identified by the applicant or by Energy Commission staff are considered to be significantly impacted by the construction and operation of the proposed project.

CUMULATIVE IMPACTS

It is staff's opinion that the potential for significant adverse cumulative impacts on paleontological resources or geological resources is unlikely, if the Morro Bay Power Plant is constructed according to the proposed conditions of certification. This opinion is based on the fact that the site is not known to have significant paleontological or geological resources.

FACILITY CLOSURE

A definition and general approach to closure is presented in the **General Conditions** section of this document. Facility closure activities are not anticipated to impact geological or paleontological resources. This is due to the fact that no paleontological or geological resources are known to exist at the power plant location. In addition, decommissioning and closure of the power plant should not negatively affect geological or paleontological resources since the majority of the ground disturbed in plant decommissioning and closure would have been disturbed in the construction of the plant.

MITIGATION

Based upon the literature and archives search, field surveys and the preliminary geotechnical investigation for the project, the applicant has proposed monitoring and mitigation measures to be followed during the construction of the power plant facilities. Energy Commission staff agree with the applicant that there is a low probability that vertebrate fossils will be encountered during construction of the power plant and related features.

The proposed conditions of certification are to allow the Energy Commission Compliance Project Manager (CPM) and the applicant to adopt a compliance monitoring scheme that will ensure compliance with LORS applicable to geological hazards and geological and paleontological resources for the project.

CONCLUSION AND RECOMMENDATIONS

The applicant will likely be able to comply with applicable LORS. The project should have no adverse impact with respect to geological and paleontological resources. Staff proposes to ensure compliance with applicable LORS for geological hazards and geological and paleontological resources with the adoption of the proposed conditions of certification listed below, and the conditions of certification for surface water hydrology, which are located in the **Soils and Water Resources** section of this document.

PROPOSED CONDITIONS OF CERTIFICATION

GEO-1 Prior to the start of construction, the project owner shall assign to the project an engineering geologist(s), certified by the State of California, to carry out the duties required by the 1998 edition of the California Building Code (CBC) Appendix Chapter 33, Section 3309.4. The certified engineering

geologist(s) assigned must be approved by the Compliance Project Manager (CPM). A geotechnical engineer may also perform the functions of the engineering geologist, if that person has the appropriate California license.

Verification: At least 30 days (or a lesser number of days mutually agreed to by the project owner and the Chief Building Official (CBO)) prior to the start of construction, the project owner shall submit to the CPM, for approval, the name(s) and license number(s) of the certified engineering geologist(s) or geotechnical engineer(s) assigned to the project. The submittal should include a statement that CPM approval is needed. The CPM will approve or disapprove of the engineering geologist(s) or geotechnical engineer(s) and will notify the project owner of its findings within 15 days of receipt of the submittal. If the engineering geologist(s) or geotechnical engineer(s) are subsequently replaced, the project owner shall submit for approval the name(s) and license number(s) of the newly assigned individual(s) to the CPM. The CPM will notify the project owner of their approval or disapproval of the engineering geologist(s) or geotechnical engineer(s) within 15 days of receipt of the notice of personnel change.

GEO-2 The assigned engineering geologist(s) or geotechnical engineer(s) shall carry out the duties required by the 1998 CBC, Appendix Chapter 33, Section 3309.4- Engineered Grading Requirement, and Section 3318.1 – Final Reports. Those duties are:

1. Prepare the Engineering Geology Report. This report shall accompany the Plans and Specifications when applying to the CBO for the grading permit.

2. Monitor geologic conditions during construction.

3. Prepare the Final Engineering Geology Report.

Protocol: The Engineering Geology Report required by the 1998 CBC Appendix Chapter 33, Section 3309.3 Grading Designation, shall include an adequate description of the geology of the site, conclusions and recommendations regarding the effect of geologic conditions, including the liquefaction potential and foundation conditions, on the proposed development, and an opinion on the adequacy of the site for the intended use as affected by geologic factors.

The Final Engineering Geology Report to be completed after completion of grading, as required by the 1998 CBC Appendix Chapter 33, Section 3318.1, shall contain the following: A final description of the geology of the site and any new information disclosed during grading; and the effect of same on recommendations incorporated in the approved grading plan. The engineering geologist shall also submit a statement that, to the best of his or her knowledge, the work within his or her area of responsibility is in

accordance with the approved Engineering Geology Report and applicable provisions of this chapter.

Verification: (1) Within 15 days after submittal of the application(s) for grading permit(s) to the CBO, the project owner shall submit a signed statement to the CPM stating that the Engineering Geology Report has been submitted to the CBO as a supplement to the plans and specifications and that the recommendations contained in the report are incorporated into the plans and specifications. (2) Within 90 days following completion of the final grading, the project owner shall submit copies of the Final Engineering Geology Report required by the 1998 CBC Appendix Chapter 33, Section 3318- Completion of Work, to the CBO, and to the CPM on request.

PAL-1 Prior to the start of any project-related construction activities (defined as any construction-related vegetation clearance, ground disturbance and preparation, and site excavation activities), the project owner shall ensure that the designated paleontological resource specialist approved by the CPM is available for field activities and prepared to implement the conditions of certification.

The designated paleontological resource specialist shall be responsible for implementing all the paleontological conditions of certification and for using qualified personnel to assist in this work.

Protocol: The project owner shall provide the CPM with the name and statement of qualifications for the designated paleontological resource specialist.

The statement of qualifications for the designated paleontological resources specialist shall demonstrate that the specialist meets the following minimum qualifications: a degree in paleontology or geology or paleontological resource management; and at least three years of paleontological resource mitigation and field experience in California, including at least one year's experience leading paleontological resource mitigation and field activities.

The statement of qualifications shall include a list of specific projects the specialist has previously worked on; the role and responsibilities of the specialist for each project listed; and the names and phone numbers of contacts familiar with the specialist's work on these referenced projects.

If the CPM determines that the qualifications of the proposed paleontological resource specialist do not satisfy the above requirements, the project owner shall submit another individual's name and qualifications for consideration.

If the approved, designated paleontological resource specialist is replaced prior to completion of project mitigation, the project owner shall obtain CPM approval of the new designated paleontological resource specialist by submitting the name and qualifications of the proposed replacement to the

CPM, at least ten (10) days prior to the termination or release of the preceding designated paleontological resource specialist.

Should emergency replacement of the designated specialist become necessary, the project owner shall immediately notify the CPM to discuss the qualifications of its proposed replacement specialist.

Verification: At least thirty (30) days prior to the start of construction, the project owner shall submit the name and resume and the availability for its designated paleontological resource specialist, to the CPM for review and approval. The CPM shall provide written approval or disapproval of the proposed paleontological resource specialist.

At least ten (10) days prior to the termination or release of a designated paleontological resource specialist, the project owner shall obtain CPM approval of the replacement specialist by submitting to the CPM the name and resume of the proposed new designated paleontological resource specialist. Should emergency replacement of the designated specialist become necessary, the project owner shall immediately notify the CPM to discuss the qualifications of its proposed replacement specialist.

PAL-2 Prior to the start of project construction, the designated paleontological resource specialist shall prepare a Paleontological Resources Monitoring and Mitigation Plan to identify general and specific measures to minimize potential impacts to sensitive paleontological resources, and submit this plan to the CPM for review and approval. After CPM approval, the project owner's designated paleontological resource specialist shall be available to implement the Monitoring and Mitigation Plan, as needed, throughout project construction.

In addition to the project owner's adoption of the guidelines of the Society of Vertebrate Paleontologists (SVP 1994), the Paleontological Resources Monitoring and Mitigation Plan shall include, but not be limited to, the following elements and measures:

- A discussion of the sequence of project-related tasks, such as any pre-construction surveys, fieldwork, flagging or staking; construction monitoring; mapping and data recovery; fossil preparation and recovery; identification and inventory; preparation of final reports; and transmittal of materials for curation;

- Identification of the person(s) expected to assist with each of the tasks identified within this condition for certification, and a discussion of the mitigation team leadership and organizational structure, and the inter-relationship of tasks and responsibilities;

- Where monitoring of project construction activities is deemed necessary, the extent of the areas where monitoring is to occur and a schedule for the monitoring;

- An explanation that the designated paleontological resource specialist shall have the authority to halt or redirect construction in the immediate vicinity of a vertebrate fossil find until the significance of the find can be determined;

- A discussion of equipment and supplies necessary for recovery of fossil materials and any specialized equipment needed to prepare, remove, load, transport, and analyze large-sized fossils or extensive fossil deposits;

- Inventory, preparation, and delivery for curation into a retrievable storage collection in a public repository or museum, which meets the Society of Vertebrate Paleontologists standards and requirements for the curation of paleontological resources; and

- Identification of the institution that has agreed to receive any data and fossil materials recovered during project-related monitoring and mitigation work, discussion of any requirements or specifications for materials delivered for curation and how they will be met, and the name and phone number of the contact person at the institution.

Verification: At least thirty (30) days prior to the start of construction on the project, the project owner shall provide the CPM with a copy of the Monitoring and Mitigation Plan prepared by the designated paleontological resource specialist for review and approval. If the plan is not approved, the project owner, the designated paleontological resource specialist, and the CPM shall meet to discuss comments and negotiate necessary changes.

PAL-3 Prior to the start of construction, and throughout the project construction period as needed for all new employees, the project owner and the designated paleontological resource specialist shall prepare and conduct CPM-approved training to all project managers, construction supervisors, and workers who operate ground disturbing equipment. The project owner and construction manager shall provide the workers with the CPM-approved set of procedures for reporting any sensitive paleontological resources or deposits that may be discovered during project-related ground disturbance.

Protocol: The paleontological training program shall discuss the potential to encounter paleontological resources in the field, the sensitivity and importance of these resources, and the legal obligations to preserve and protect such resources.

The training shall also include the set of reporting procedures that workers are to follow if paleontological resources are encountered during project activities. The training program shall be presented by the designated paleontological resource specialist and may be combined with other training programs prepared for cultural and biological resources, hazardous materials, or any other areas of interest or concern.

Verification: At least (30) thirty days prior to the start of project construction, the project owner shall submit to the CPM for review, comment, and written approval, the proposed employee training program and the set of reporting procedures the workers are to follow if paleontological resources are encountered during project construction.

If the employee training program and set of procedures are not approved, the project owner, the designated paleontological resource specialist, and the CPM shall meet to discuss comments and negotiate necessary changes, before the beginning of construction.

Documentation for training of additional new employees shall be provided in subsequent Monthly Compliance Reports, as appropriate.

PAL-4 The designated paleontological resource specialist or designee shall be present at all times he or she deems appropriate to monitor construction-related grading, excavation, trenching, and/or augering in areas where potentially fossil-bearing sediments have been identified. If the designated paleontological resource specialist determines that full-time monitoring is not necessary in certain portions of the project area, the designated specialist shall notify the project owner.

Verification: The project owner shall include in the Monthly Compliance Reports a summary of paleontological activities conducted by the designated paleontological resource specialist.

PAL-5 The project owner, through the designated paleontological resource specialist, shall ensure recovery, preparation for analysis, analysis, identification and inventory, the preparation for curation, and the delivery for curation of all significant paleontological resource materials encountered and collected during the monitoring, data recovery, mapping, and mitigation activities related to the project.

Verification: The project owner shall maintain in its compliance files copies of signed contracts or agreements with the designated paleontological resource specialist and other qualified research specialists who will ensure the necessary data and fossil recovery, mapping, preparation for analysis, analysis, identification and inventory, and preparation for and delivery of all significant paleontological resource materials collected during data recovery and mitigation for the project.

The project owner shall maintain these files for a period of three years after completion and approval of the CPM-approved Paleontological Resources Report and shall keep these files available for periodic audit by the CPM.

PAL-6 The project owner shall ensure preparation of a Paleontological Resources Report by the designated paleontological resource specialist. The Paleontological Resources Report shall be completed following completion of the analysis of the recovered fossil materials and related information. The project owner shall submit the paleontological report to the CPM for approval.

Protocol: The report shall include, but not be limited to, a description and inventory list of recovered fossil materials; a map showing the location of paleontological resources encountered; determinations of sensitivity and significance; and a statement by the paleontological resource specialist that project impacts to paleontological resources have been mitigated.

Verification: The project owner shall submit a copy of the Paleontological Resources Report to the CPM for review and approval under a cover letter stating that it is a confidential document. The report is to be prepared by the designated paleontological resource specialist within 90 days following completion of the analysis of the recovered fossil materials.

PAL-7 The project owner shall include in the facility closure plan a description regarding the facility closure activity's potential to impact paleontological resources. The conditions for closure will be determined when a facility closure plan is submitted to the CPM twelve months prior to closure of the facility. If no activities are proposed that would potentially impact paleontological resources, then no mitigation measures for paleontological resource management are required in the facility closure plan.

Protocol: The closure requirements for paleontological resources are to be based upon the Paleontological Resources Report and the proposed grading activities for facility closure.

Verification: The project owner shall include a description of closure activities described above in the facility closure plan.

REFERENCES

Abrahamson, N. and W. Silva. 1997. Equations for Estimating Horizontal Response Spectra and Peak Acceleration from Western North American Earthquakes: A Summary of Recent Work, in *Seismological Research Letters*, Volume 68, Number 1, January February 1997, pages 128-153.

California Building Standards Commission. 1998. 1998 California Building Code. Volumes 1 and 2.

CDMG (California Division of Mines and Geology). 1994. Fault Activity Map of California and Adjacent Areas with Locations and Ages of Recent Volcanic Eruptions, Scale: 1:750,000.

CDMG (California Division of Mines and Geology, in cooperation with the U.S. Geological Survey). 1996. Probabilistic Seismic Hazard Map for California, CDMG Open-File Report 96-08

CDMG (California Division of Mines and Geology). 1997. Guidelines for Evaluating and Mitigating Seismic Hazards in California, CDMG Special Publication 117.

CDMG (California Division of Mines and Geology). 1999. Seismic Shaking Hazard Maps of California, CDMG Map Sheet 48.

Campbell, K.W. 1997. Empirical Near-Source Attenuation Relationship-s for Horizontal and Vertical Components of Peak Ground Acceleration, Peak Ground Velocity, and Pseudo-Absolute Acceleration Response Spectra, in Seismological Research Letters, Vol. 68, No.1.

DUKE (Duke Energy Morro Bay LLC). 2000a. Application for Certification, Volumes 1a-1b, II-IV, Morro Bay Power Plant Project, (00-AFC-12). Submitted to the California Energy Commission on October 23, 2000.

DUKE (Duke Energy North America). 2001. Responses to February 9, 2001 CEC Data Requests.

Govean, F. PhD. 1999. Paleontological Resource Assessment Morro Bay Power Plant Expansion, Morro Bay, San Luis Obispo County, California, Morro Bay North and Morro Bay South 7.5' USGS Quadrangles; prepared for TRC Environmental Solutions.

Hall, C.A. 1973. Geologic Map of the Morro Bay South and Port San Luis Quadrangles, San Luis Obispo County, California, USGS Map MF-511.

Hushmand Associates, Inc. 2000a. Geotechnical Investigation Morro Bay Power Project, Morro Bay, San Luis Obispo County, California

Idriss, I.M. 1993. Procedures for Selecting Earthquake Ground Motions at Rock Sites, in National Institute of Standards and Technology, Gaithersburg, Maryland, Rept. No. NIST GCR 93-625

International Conference of Building Officials. 1997. 1997 Uniform Building Code, Volume 2.

SVP (Society of Vertebrate Paleontologists). 1994. Measures for Assessment and Mitigation of Adverse Impacts to Non-renewable Paleontologic Resources: Standard Procedures. October 1994.

POWER PLANT EFFICIENCY

Dr. Hamid Rastegar

INTRODUCTION

The Energy Commission makes findings as to whether energy use by the Morro Bay Power Plant Project (MBPP) will result in significant adverse impacts on the environment, as defined in the California Environmental Quality Act (CEQA). If the Energy Commission finds that the MBPP's consumption of energy creates a significant adverse impact, it must determine whether there are any feasible mitigation measures that could eliminate or minimize the impacts. In this analysis, staff addresses the issue of inefficient and unnecessary consumption of energy.

In order to support the Energy Commission's findings, this analysis will:

- determine whether the facility will likely present any adverse impacts upon energy resources;
- determine whether these adverse impacts are significant; and if so,
- determine whether feasible mitigation measures exist that would eliminate the adverse impacts, or reduce them to a level of insignificance.

LAWS, ORDINANCES, REGULATIONS AND STANDARDS (LORS)

FEDERAL

No federal laws apply to the efficiency of this project.

STATE

CALIFORNIA ENVIRONMENTAL QUALITY ACT GUIDELINES

CEQA Guidelines state that the environmental analysis "…shall describe feasible measures which could minimize significant adverse impacts, including where relevant, inefficient and unnecessary consumption of energy" (Cal. Code Regs., tit. 14, § 15126.4(a)(1)). Appendix F of the Guidelines further suggests consideration of such factors as the project's energy requirements and energy use efficiency; its effects on local and regional energy supplies and energy resources; its requirements for additional energy supply capacity; its compliance with existing energy standards; and any alternatives that could reduce wasteful, inefficient and unnecessary consumption of energy (Cal. Code regs., tit. 14, § 15000 et seq., Appendix F).

LOCAL

No local or county ordinances apply to power plant efficiency.

SETTING

Duke Energy Morro Bay LLC (Duke) is proposing to construct and operate the 1,200-megawatt (MW) Morro Bay Power Plant Project (MBPP). The "modernization" project is proposed to be located at the existing 1,030 MW Morro Bay Power Plant site that is owned and operated by Duke Energy. This site is located within the City of Morro Bay, San Luis Obispo County, near Morro Bay Harbor. Duke proposes construction of two new generating units to replace the currently operating generation Units 1 and 2 (326 MW, 1950's technology) and Units 3 and 4 (676 MW, 1960's technology) with two, state-of-the-art 600 MW combined cycle units. Upon completion of the project, the Plant will be capable of producing a nominal 1,200 MW net. Each new unit will consist of two gas-fired combustion turbines (CTs) and one steam turbine (ST) driven by the heat recovered from the hot exhaust of the CTs in a heat recovery steam generator (HRSG). Each new unit will have two, 145-foot tall stacks compared with the existing plant's three 450 foot tall stacks. The new combined cycle units will continue to use the existing once-through seawater cooling system that includes an intake structure that draws water from Morro Bay and an ocean outfall which discharges into Estero Bay. Power from the combined cycle units will tie into the Pacific Gas and Electric Company's (PG&E) Morro Bay Switchyard that is located immediately adjacent to the power plant. No offsite transmission lines or transmission line upgrades are required by the power plant (Duke 2000a, AFC §§ 1.1, 1.2, 8.1, 8.3, 8.3.1). Natural gas will be delivered by the existing PG&E pipeline and distribution system. Commercial operation will begin in the fall of 2003 (Duke 2000a, AFC §§ 1.1, 1.2).

The proposed new MBPP will consist of two combined cycle trains, each composed of two General Electric model PG7241 "7FA" gas turbines (without inlet air coolers) producing approximately 170 MW each, two triple-pressure heat recovery steam generators (HRSGs) with duct-firing capability, and a single steam turbine producing a maximum of about 189 MW arranged in a two-on-one combined cycle train, totaling approximately 516 net MW. The gas turbines will be equipped with dry low-NOx combustors and the HRSGs will incorporate selective catalytic reduction (SCR) to control air emissions. Additional steam turbine capacity of about 84 MW per unit can be obtained by duct-firing in the HRSG at a lower efficiency (Duke 2000a, AFC §§ 1.2, 2.22.2.3, 2.2.3.1, 2.2.3.2, 2.2.3.3, Figures 2-14 & 2-15, Appendix 8-1).

ANALYSIS

ADVERSE IMPACTS ON ENERGY RESOURCES

The inefficient and unnecessary consumption of energy, in the form of non-renewable fuels such as natural gas and oil, constitutes an adverse environmental impact. An adverse impact can be considered significant if it results in:

- adverse effects on local and regional energy supplies and energy resources;
- a requirement for additional energy supply capacity;

- noncompliance with existing energy standards; or
- the wasteful, inefficient and unnecessary consumption of fuel or energy.

PROJECT ENERGY REQUIREMENTS AND ENERGY USE EFFICIENCY

Any power plant large enough to fall under Energy Commission siting jurisdiction will consume large amounts of energy. The MBPP will burn natural gas at a nominal rate up to 185 billion Btu per day LHV (lower heating value) (Duke 2000a, AFC Appendix 8-1). This is a substantial rate of energy consumption, and holds the potential to impact energy supplies. Under expected project conditions, electricity will be generated at a full load efficiency of approximately 53 percent LHV (Duke 2000a, AFC Appendix 8-1) compared to the average fuel efficiency of a typical utility company baseload power plant at approximately 35 percent LHV.

ADVERSE EFFECTS ON ENERGY SUPPLIES AND RESOURCES

The applicant has described its sources of supply of natural gas for the MBPP (Duke 2000a, AFC §§ 2.2.3.12, 8.5.1, 8.5.1.1, 8.5.1.2). Natural gas for the MBPP will be supplied from the Pacific Gas & Electric (PG&E) system via PG&E's Line 306 from Kettleman Compressor Station, approximately 70 miles from the MBPP. This natural gas system, which provides access to gas from the Southwest through the Topock compressor station and from the North through Malin, Oregon, represents a resource of considerable capacity. These systems offer access to far more gas than the plant would require (Duke 2000a, AFC §§ 2.2.8, 8.3.1). It is therefore highly unlikely that the MBPP could pose a substantial increase in demand for natural gas in California.

ADDITIONAL ENERGY SUPPLY REQUIREMENTS

The MBPP will not use any alternative or backup fuel in its operation. Only natural gas from PG&E Line 306 will be used. The MBPP has no other significant energy requirements. Because the natural gas resource supplying the MBPP is more than adequate to meet project needs there is no real likelihood that the MBPP will require the development of additional energy supply capacity.

COMPLIANCE WITH ENERGY STANDARDS

No standards apply to the efficiency of the MBPP or other non-cogeneration projects.

ALTERNATIVES TO REDUCE WASTEFUL, INEFFICIENT AND UNNECESSARY ENERGY CONSUMPTION

The MBPP could be deemed to create significant adverse impacts on energy resources if alternatives existed that would reduce the project's use of fuel. Evaluation of alternatives to the project that could reduce wasteful, inefficient or unnecessary energy consumption first requires examination of the project's energy consumption. Project fuel efficiency, and therefore its rate of energy consumption, is determined by the configuration of the power producing system and by the selection of equipment used to generate power.

PROJECT CONFIGURATION

The proposed modernization of the MBPP will replace the existing four Rankine cycle units (Unit 1, year-on-line 1956, 169.1 MW; Unit 2, year-on-line 1955, 169.1 MW; Unit 3, year-on-line 1962, 359.0 MW; and Unit 4, year-on-line 1963, 359.0 MW (UDI)), with a total nominal capacity of 1056.2 MW, with two new combined units with a total nominal capacity of 1200.1 MW (Duke, 2000a, AFC 1.1, 1.2, Appendix 8-1). These new units will be a typical two-on-one configuration with two CT/triple-pressure HRSG trains providing steam to a single ST. The triple-pressure HRSG sequentially produces steam at high, intermediate, and low pressures to improve the efficiency of the heat-recovery-based steam cycle. These new units will not include CT bypass stacks that would allow CT operation with the HRSGs offline, nor will they include a steam dump/condenser system to allow peak CT operation with the ST offline. This operational limitation is not a serious reliability issue, however, because the ST system technology is the most proven and reliable major component. Bypass stacks would only allow continued operation of the CT in simple cycle mode until repairs could be undertaken on the HRSG and/or ST system because of worker safety issues. The CTs will have to shut down before workers could enter the HRSG to undertake repairs (even protective pressurized double damper barriers are not considered to offer adequate worker protection). And while repairs could be performed on the ST system with operating CTs if a suitably designed steam dump condenser was available, such a system would require a very large cooling system that could exceed the capabilities of the MBPP site under peak demand periods. In any case, simple cycle operation of the MBPP CTs will not be efficient compared to the combined cycle mode and the ability to use CT stack bypass or steam dump condensers to allow for simple cycle operation is a reliability/flexibility issue and not an efficiency issue.

The MBPP proposes to use fuel gas preheating (Duke 2000a, AFC Appendix 8-1) and a new multiple pump system for circulating cooling water that operates on load requirements (Duke 2000a, AFC § 1.2). Staff believes these two features contribute meaningful efficiency enhancements to the MBPP. The two-train CT/HRSG configuration also allows for high efficiency during unit turndown because one CT can be shut down at 50 percent load, leaving one fully loaded, efficiently operating CT instead of having any CTs operating at an inefficient 50 percent load.

The MBPP includes HRSG duct burners, partially to replace heat to the ST cycle during high ambient temperatures when CT capacity drops, and partially as added power. Duct firing also provides a number of operational benefits, such as balancing and optimizing the operation of the ST cycle.

EQUIPMENT SELECTION

Modern gas turbines embody the most fuel-efficient electric generating technology available today. The 7FA-class gas turbines to be employed in the MBPP represent some of the most modern and efficient such machines now available. The applicant will employ a General Electric model PG7241combined cycle power train (Duke 2000a, AFC §§ 1.1.1, 2.1, 2.2.3, 2.2.5.1, 2.2.5.1.2, 6.6; Figures 2-14, 2-15).
CT manufacturers are currently offering advanced CT technologies, such as the G-class and H-class machines that typically involve more complexity than the F-class

machines. Such advanced machines would involve a considerable risk for a power plant owner wishing to compete on the spot market because they are relatively unproven. Even the first combined cycle power plants based on the GE 7FA-class gas turbine have only been in operation since the early 1990s. The first two 7F turbines in combined cycle application went into service at Virginia Electric Power Company at its Chesterfield Station in 1990 and 1992 (Chesterfield 7, 1990, 147 MW CT and 72 MW ST and Chesterfield 8, 1992, 147 MW CT and 72 MW ST (UDI)); these units were intended for intermediate load, cycling service. The next four GE 7F (7FA) turbines went into service as baseload units at Florida Power and Light Company's Martin Station in 1994 as two units, each in two-on-one configurations (Martin 3, 1994, two 204 MW CTs and one 204 MW ST and Martin 4, 1994, two 204 CTs and one 204 MW ST, (UDI)). These initial applications of the GE 7F turbine were instrumented and monitored as EPRI research programs: reliability data from these programs are largely the basis for the EPRI member programs to address both F-Class CT and HRSG reliability issues. EPRI Science and Technology Solutions, Power Generation, Target 072.0 addresses F-class CT issues and Target 065.2 addresses multi-pressure HRSG issues (for a brief description of the technical issues being addressed by these EPRI programs see that portion of this document entitled **Reliability)**.

Because the F-class CTs and their associated HRSGs, although considered a proven technology, are still experiencing costly problems, staff believes that the far less proven G-class and H-class technologies cannot be compared on only an efficiency basis to F-class CTs for competitive power plants. The F-class CTs selected by Duke, along with the triple-pressure HRSGs, are the most efficient, sufficiently proven natural gas power generation technology to meet the MBPP's objectives.

EFFICIENCY OF ALTERNATIVES TO THE PROJECT

The project objective is to be able to compete on the spot market. A number of technologies considered by Duke may have slightly higher efficiencies, but such technologies are either not commercially proven, not available at a large enough scale, or are much more expensive than the combined cycle technology selected by Duke. Staff believes that combined cycle technology using F-class CTs is the most efficient technology for large power plants wishing to compete on the spot market.

Alternative Generating Technologies

Alternative generating technologies for the MBPP are considered in the AFC (Duke 2000a, AFC §§ 5.9, 5.9.1, 5.9.2). Non-gas options considered include integrated-coal-gasification combined cycle, conventional coal-fired boiler, coal-fired pressurized-fluidized-bed, direct-coal-fired and indirect-coal-fired turbines, nuclear reactors, hydroelectric, geothermal, ocean energy, biomass fuel, municipal waste fuel, solar thermal, solar photovoltaic and wind generation. One of the project's stated objectives is to compete as a merchant plant (Duke 2000a, AFC § 2.1.1.2). Given the project objectives, location, and air pollution control requirements, staff agrees that only natural gas-burning technologies are feasible.

Natural Gas-Burning Technologies

Alternative natural gas-burning technologies were also considered in the AFC (Duke 2000a, AFC §§ 5.9, 5.9.1, 5.9.2). Initially rejected were Kalina combined cycle, advanced gas turbine cycles, and fuel cells, all on the basis of lack of commercial availability and/or non-competitive on a scale necessary to the goals of the project (Duke 2000a, AFC § 5.9.2.2.1). More seriously considered were conventional gas-fired boiler/steam turbine (rejected because the efficiency is too low to compete), supercritical gas-fired boiler/steam turbine (rejected because of high capital cost and non-competitive efficiency), simple-cycle combustion turbine (rejected because of low efficiency compared to the reference combustion turbine combined cycle technology), and cogeneration (rejected because there are no nearby steam customers) (Duke 2000a, AFC § 5.9.2.1.1).

CUMULATIVE IMPACTS

Staff knows of no other projects that could result in cumulative energy impacts. There are no nearby power plant projects that hold the potential for cumulative impacts when aggregated with the MBPP. The operation of the proposed MBPP at any generating capacity level will result in significantly less natural gas being consumed than currently for the four existing units at the site because the new units are much more efficient than the existing units they will replace. Even without the proposed MBPP, other power plants would be required to burn the natural gas required to meet California's electricity needs. Since natural gas will be burned by the power plants that are most competitive on the spot market, the most efficient plants will run the most. The high efficiency of the proposed MBPP should allow it to compete very favorably, running at a high capacity factor, therefore reducing the cumulative amount of natural gas consumed for power generation.

FACILITY CLOSURE

A planned or unplanned closure of the facility will not affect, nor will it be affected by, project efficiency. Any efficiency impacts due to closure of the project would be on the entire California electric system. The large size of the electric system serving California, the number of generating plants offering to sell power contracts to the State and competitively to the California Independent System Operator (CaISO) will ensure the efficient management of the system and lend assurance that closure of this facility will not produce significant adverse impacts on efficiency.

CONCLUSIONS

The MBPP, if constructed and operated as proposed with duct firing, would generate a nominal 1200 MW of electric power at an overall project fuel efficiency approaching 52.8 percent (LHV). The unfired combined cycle operated without duct firing would produce a nominal 1032 MW of power at a even higher efficiency of 55.0 percent (LHV), and firing the duct burners could add another 168 MW at an incremental efficiency of 42 percent (LHV). While duct firing is not as efficient as the MBPP unfired base combined cycle, it represents a low-cost and very reliable source of peaking power at an efficiency that is competitive with other existing

peaking units. And, because duct firing will need to compete on the spot market against other units, when it is operating it will be the most efficient peaking unit supplying the Cal-ISO.

No energy efficiency standards apply to the project. It will not create significant adverse effects on energy supplies or resources, will not require additional sources of energy supply, and will not consume energy in a wasteful or inefficient manner. Staff concludes that the MBPP would present no significant adverse impacts upon energy resources. No cumulative impacts on energy resources are likely. Facility closure would not likely present significant adverse impacts on electric system efficiency. No Conditions of Certification are proposed.

REFERENCES

Duke (Duke Energy Morro Bay LLC). 2000 a. Application for Certification, Volumes 1a-1b, II-IV, Morro Bay Power Plant Project (00-AFC-12). Submitted to the California Energy Commission on October 23, 2000.

UDI (Utility Data Institute). 1997 World Power Plants, 3rd Ed., McGraw-Hill Companies, Inc.

POWER PLANT RELIABILITY

Dr. Hamid Rastegar

INTRODUCTION

This analysis by the Energy Commission staff examines reliability issues to determine if the proposed power plant is likely to be built in accordance with typical industry norms for reliability of power generation. Staff uses this level of reliability as a benchmark because it ensures that the resulting project would likely not degrade the overall reliability of the electric transmission system it serves (see **Setting** below).

The scope of this power plant reliability analysis covers:

- equipment availability;
- plant maintainability;
- fuel and water availability; and
- power plant reliability in relation to natural hazards.

Staff examined the project design criteria to determine if the project is likely to be built in accordance with typical industry norms for reliability of power generation. While Duke Energy North America, LLC (Duke) has predicted a better than 90 percent availability for the power plant (see below), staff uses the benchmark identified above, rather than Duke's projection, to evaluate the project's reliability.

LAWS, ORDINANCES, REGULATIONS AND STANDARDS (LORS)

Presently, there are no laws, ordinances, regulations or standards (LORS) that establish either power plant reliability criteria or procedures for attaining reliable operation. However, the Commission must make findings as to the manner in which the project is to be designed, sited and operated to ensure safe and reliable operation (Cal. Code Regs., tit. 20, § 1752(c)). Staff takes the approach that a project's reliability is acceptable if it does not degrade the reliability of the utility transmission system to which it is connected. This is considered to be likely if the power plant's reliability is at least equal to that of other power plants on that transmission system (see **Setting** below).

SETTING

According to the North American Reliability Council's Reliability Assessment–2000-2009 (NERC 2000a), the Western Systems Coordinating Council's (WSCC) self-assessment for the period 2000-2009 projects adequate capacity margins (assuming the construction of 30,200 MW of net new generation) and fuel supplies under normal weather conditions for all regions, including the California-Mexico Power Area (adverse weather conditions are predicted to require some non-firm load shedding in California). Peak demand requirements in this region are

projected to grow at an annual rate of 2 percent from 1999 through 2009; projected reserve margins in this region range between 9.3 and 17.8 percent of firm peak demand for the next ten years. The California transmission system is also projected to be adequate assuming the completion of planned electric power transfer capacity south of San Onofre.

The recent restructuring of the electric power industry in California has added much uncertainty in predicting both future added capacity and customer demand. In the regulated monopoly electric industry of past decades, the utility companies augmented overall system reliability, in part, by maintaining a "reserve margin" of power plant capacity and power plants run at part-load as running (spinning) reserve. Reserve margin amounted to having available, at all times, sufficient generating capacity, in the form of standby power plants, to handle unplanned outages of generating or transmission facilities. The utilities generally maintained adequate reserve margin based on the proven availability and reliability of the power plants and transmission facilities that constituted the system. Reserve units could be on cold-standby for slow startup or hot standby for faster startup. Running reserve was maintained as needed for very rapid power increases to absorb the shock of a sudden unplanned outage of a power plant or transmission line that could cause other operating power plant units to trip due a sudden, large load spike.

The newly restructured competitive electric power industry in California shifted this responsibility for maintaining system reliability to the California Independent System Operator (Cal-ISO) on March 31, 1998. The Cal-ISO is responsible for purchasing, dispatching and selling electric power throughout the state. Protocols are being developed and implemented by the Cal-ISO that are intended to achieve an acceptable level of reliability in the new competitive market system. However, if significant numbers of power plants exhibit individual reliability sufficiently lower than expected historical levels, the assumptions used by Cal-ISO to ensure system reliability could prove invalid, with potentially disappointing results. It is therefore important that new power plants achieve their predicted levels of availability if CaISO's planned use of ancillary services is to maintain transmission system reliability.

Duke Energy proposes to begin commercial operation of the nominal 1200 MW Morro Bay Plant (MBPP) in the fall of 2003 (Duke 2000a, AFC §§ 1.1, 1.2) selling competitive power on the spot market (Duke 2000a, AFC § 2.1.1.2). The sale of ancillary services to the CaISO is also possible, especially because the MBPP is well-located to provide reactive power support to the local transmission system (Duke 2000a, AFC § 2.1.1.4). The project expects to achieve a minimum overall availability of over 90 percent (Duke 2000a, AFC § 2.2.3.5).

ANALYSIS

The availability factor for a power plant is the percentage of the time that it is available to generate power; both planned and unplanned outages subtract from its availability. Measures of power plant reliability are based on its actual ability to generate power when it is considered available and are based on starting failures

and unplanned, or forced, outages. For practical purposes, reliability can be considered a combination of these two industry measures, making a reliable power plant one that is available when called upon to operate. Throughout its intended 30-year life (Duke 2000a, AFC § 4.2.2), the MBPP will be expected to perform reliably in baseload, load-following duty, and duct-fired peaking operation. To operate for extended periods of time without planned maintenance or repair downtime, the plant must be maintainable with scheduled maintenance outages and have adequate levels of equipment availability, fuel and water availability, and resistance to natural hazards. These factors for the project are compared to industry norms by staff in the reliability analysis. If they compare favorably, staff can conclude that the MBPP will be as reliable as other power plants on the electric system, and will therefore not degrade system reliability.

EQUIPMENT AVAILABILITY

Equipment availability will be ensured by use of appropriate quality assurance/ quality control (QA/QC) programs during design, procurement, construction and operation of the plant, and by providing for adequate maintenance and repair of the equipment and systems (discussed below).

QUALITY CONTROL PROGRAM

The MBPP has a detailed quality control program for design, construction, testing, and record keeping typical of the power industry (Duke 2000a, AFC §§ 8.5.2.2.5, 8.5.2.2.5). Staff expects implementation of this program to yield typical reliability of design and construction.

PLANT MAINTAINABILITY

EQUIPMENT REDUNDANCY

A generating facility called on to operate in baseload service for long periods of time must be capable of being maintained while operating. A typical approach for achieving this is to provide redundancy for those pieces of equipment most likely to require service or repair. Duke plans to provide appropriate redundancy of equipment so that no single rotating equipment failure in the balance-of-plant and no single point control system failure can cause a combustion turbine HRSG “train” to go offline; in addition, no single switchyard circuit breaker or step-up transformer failure will isolate the plant from the transmission system (Duke 2000a, AFC §§ 8.3.4, 8.5.2.2.2). In addition, the project will consist of two redundant two-on-one configurations with two combustion turbine (CT)/heat recovery steam generator (HRSG) trains providing steam to a single steam turbine (ST). These new units will typically not include CT bypass stacks that would allow CT operation with the HRSGs offline, nor will they include a steam dump/condenser system to allow CT operation with the ST offline. This operational limitation is not a serious reliability issue, however, because the ST system technology is the most proven and reliable major component. The two trains of the less proven newer General Electric (GE) 7FA CT and the larger, higher-temperature, multi-pressure HRSG it requires provide an adequate degree of major component redundancy. Four (4) trains of combined cycle units (gas turbine generators, HRSGs) provide inherent reliability.

Failure of a non-redundant component of one train should not cause any other train to fail, thus allowing the plant to continue to generate (at ¼ reduced output for each train on planned maintenance outage or unplanned failure). In addition, continual improvements to both the GE 7FA CT and large HRSGs are bringing these technologies to a high level of reliability. For example, the EPRI (www.epri.com) has member programs to address both F-Class CT and HRSG reliability issues. EPRI Science and Technology Solutions, Power Generation, Target 072.0 addresses the following F-Class CT issues:

- Competitive pressures require project developers to adopt the latest, most aggressive combustion turbine designs. Although advanced models promise unprecedented efficiency, as new, unproven technologies they also pose greater reliability risks. Indeed, industry experience with F-class machines has raised concerns that premature wear or failure of high-temperature components could offset thermal efficiency savings.

Multi-pressure HRSG issues are addressed as follows in Target 065.2:

- Heat recovery steam generators (HRSGs), particularly multi-pressure-level units, are not designed in the same manner as more familiar larger fossil-fired boilers. In addition, water treatment systems and associated plant operating practices have led to a high frequency of tube failures. Flow-assisted corrosion, repetitive exhaust duct expansion joint failure, burner duct thermal barrier coating spallation, economizer acid dew point corrosion, and gas side flow maldistribution are among the problems experienced by combined-cycle operators.

A decade of commercial operation of GE 7F CTs has provided sufficient experience to identify adequate fixes for the above reliability issues and to make the reliability of these F-class CTs predictable and acceptable.

Further, the plant's distributed control system (DCS) will be built with typical redundancy. Emergency DC and AC power systems will be supplied by redundant batteries, chargers and inverters. Other balance of plant equipment will be provided with some level of redundancy (Duke 2000a, AFC § 8.5.2.1, Table 8-2). Staff believes that equipment redundancy will be sufficient for this project.

MAINTENANCE PROGRAM

Duke Energy proposes to establish a plant maintenance program typical of the industry (Duke 2000a, AFC §§ 8.5.2, 8.5.2.1). Equipment manufacturers provide maintenance recommendations with their products, and all major power plant engineering companies offer standard off-the-shelf maintenance programs. In light of this easily available advice, and of the financial incentives to properly maintain the facility for reliable operation, staff expects that this will ensure that the project will be adequately maintained to ensure acceptable reliability.

FUEL AND WATER AVAILABILITY

For any power plant, the long-term availability of fuel and of water for cooling or process use is necessary to ensure reliability. The need for reliable sources of fuel

and water is obvious; lacking long-term availability of either source, the service life of the plant may be curtailed, threatening the supply of power as well as the economic viability of the plant.

FUEL AVAILABILITY

The MBPP will burn natural gas from the Pacific Gas & Electric (PG&E) system via PG&E's Line 306 from Kettleman Compressor Station, approximately 70 miles from the MBPP. This natural gas system, which provides access to gas from the Southwest through the Topock compressor station and from the North through Malin, Oregon (Duke 2000a, AFC §§ 2.2.3.12, 8.5.1, 8.5.1.1, 8.5.1.2), represents a resource of considerable capacity. These systems offer access to far more gas than the plant would require (Duke 2000a, AFC §§ 2.2.8, 8.3.1). Staff agrees with the applicant's prediction that there will be adequate natural gas supply and pipeline capacity to meet the project's needs.

WATER SUPPLY RELIABILITY

The MBPP will obtain water for cooling and other plant uses from the existing power plant's sea water intake and discharge system; water from on-site wells will only be used for maintenance, fire protection, landscaping, and potable water (Duke 2000a, AFC §§ 2.1.1.8, 2.2.3.6, 2.2.3.7, 6.5). In fact, the MBPP will reduce the maximum requirement for seawater cooling from the existing 464,000 gpm to 330,000 gpm (Duke 2000a, AFC §§ 2.1.1.9, 2.2.3.12, 6.5, TABLE 6.5-1, 8.3.1.1, 8.3.2). To further reduce cooling water intake the MBPP proposes a new efficient multiple pump system that operates on load requirements (Duke 2000a, AFC § 1.2). Staff believes these sources yield sufficient likelihood of a reliable supply of both seawater cooling and fresh water. (For further discussion of water supply, see that portion of this document entitled **Soil and Water Resources**.)

POWER PLANT RELIABILITY IN RELATION TO NATURAL HAZARDS

Natural forces can threaten the reliable operation of a power plant. Local flooding, high winds, and seiches (waves in inland bodies of water) will not likely represent a hazard for this project, but seismic shaking (earthquake) and tsunamis (tidal waves) represent credible threats to reliable operation (Duke 2000a, AFC § 6.3).

SEISMIC SHAKING

The site lies within CBC Seismic Zone 4 and approximately 8 km from a Type B seismic source; no active earthquake faults lie near the plant site (Duke 2000a, AFC §§ 2.2.3.11, 6.3.1.5.1, 6.3.1.5.2, 7.2.1.2.2, 8.2.3, Appendix 3.1.4, Appendix 8-4), but the PG&E Line 306 supplying gas to the power plant crosses the San Andreas Fault near the middle of its approximately 70-mile length. See that portion of this document entitled **Geology and Paleontology**.

The project will be designed and constructed to the latest appropriate LORS. Since LORS have been periodically and continually upgraded, the required compliance with current LORS applicable to seismic design represents an upgrading of performance during seismic shaking, compared to older facilities. This power plant will likely perform at least as well as, and perhaps better than, existing plants in the

electric power system because it will be built to the latest seismic design LORS. In light of the acceptable historical performance of California power plants, gas transmission pipelines, and the electrical system during seismic events, staff believes there is no special concern with overall power plant reliability that would adversely affect the electric system's reliability due to seismic events.

TSUNAMI

Four (4) historically reported tsunamis have occurred in the Morro Bay area. Morro Rock, the narrow harbor entrance, and the existing sand spit minimize any tsunami danger to the MBPP. The reported tsunamis in 1878, 1953, 1960, and 1964 damaged piers, wharves and buoys in Morro Bay Harbor, but no flooding or damage has occurred at the existing MBPP due to earthquake-induced tsunamis (Duke 2000a, AFC §§ 6.3.1.5.3). In a worst-case tsunami scenario, the emergency response agencies might require a very temporary evacuation of the plant site, but no significant damage to the power plant would be expected. Staff believes that tsunamis do not pose a significant threat to the proposed MBPP. For more discussion see the **Geology and Paleontology** section of this PSA.

COMPARISON WITH EXISTING FACILITIES

The first combined cycle power plants based on the GE 7FA-class gas turbine have only been in operation since the early 1990s. These newer combined cycle plants represent a departure in operating practice from earlier, less efficient, combined cycle power plants because they are typically operated at a much higher capacity factor than has been the experience with the older units that have more years of collected reliability data. The first two 7F turbines in combined cycle application went into service at Virginia Electric Power Company at its Chesterfield Station in 1990 and 1992 (Chesterfield 7, 1990, 147 MW CT and 72 MW ST and Chesterfield 8, 1992, 147 MW CT and 72 MW ST, (UDI)); these units were intended for intermediate load, cycling service. The next four GE 7F (7FA) turbines went into service as baseload units at Florida Power and Light Company's Martin Station in 1994 as two units, each in two-on-one configurations (Martin 3, 1994, two 204 MW CTs and one 204 MW ST and Martin 4, 1994, two 204 CTs and one 204 MW ST (UDI)). These initial applications of the GE 7F turbine were instrumented and monitored as EPRI research programs: reliability data from these programs are largely the basis for the EPRI Targets mentioned earlier (see **Equipment Redundancy** above). Despite the somewhat limited duration of relevant reliability data, the newer 7FA-class combined cycle units have undergone rapid design improvements and are demonstrating that they can live up to the high availabilities and reliabilities originally predicted. The applicant predicts a MBPP availability of over 90 percent (Duke 2000a, AFC § 2.2.3.5) and data from the North American Reliability Council ERC (NERC 1999, NERC 2000b) show yearly availability factors for combined cycle units of all types and ages during each year from 1995-1999 to average between 88.36 and 92.12 percent (five-year average of 90.87 percent). In fact, the newer, larger units can be expected to outperform the fleet of various (mostly older and smaller) gas turbine-based combined cycle units that make up the NERC statistics because of design improvements, better maintenance practices, and because the greater cycling frequency of the older units reduced both availability and reliability. Further, since the plant will consist of four (4) parallel gas

turbine generating trains, the adverse effect on availability of major maintenance operations is typically minimized by scheduling major maintenance operations during those times of year when the full plant output is not required to meet market demand. The applicant's estimate of 90 percent plant availability therefore appears to be a safe prediction. The stated procedures for assuring design, procurement and construction of a reliable power plant appear to be in keeping with industry norms, and staff believes they are likely to yield an adequately reliable plant.

FACILITY CLOSURE

Closure of the facility, whether planned or unplanned, cannot impact power plant reliability (Duke 2000a, AFC §§ 4.2, 4.2.1, 4.2.2). Reliability impacts on the electric system from facility closure, if any, could be slightly adverse because the project's location relative to the transmission system serves to reduce losses and provides added reactive power (Duke 2000a, AFC §§ 2.1.1.2, 2.1.1.4).

CONCLUSION

The applicant predicts an equivalent availability factor of over 90 percent, which staff believes is achievable in light of the industry norm of 90.87 percent for all combined cycle plants. Based on a review of the proposal, staff concludes that the plant will be built and operated in a manner consistent with industry norms for reliable operation. This should provide an adequate level of reliability.

REFERENCES

Duke (Duke Energy Morro Bay LLC). 2000 a. Application for Certification, Volumes 1a-1b, II-IV, Morro Bay Power Plant Project (00-AFC-12). Submitted to the California Energy Commission on October 23, 2000.

NERC (North American Reliability Council). 1999. 1982-1998 Historical Availability Statistics.

NERC (North American Reliability Council). 2000a. Reliability Assessment 2000-2009.

NERC (North American Reliability Council). 2000b. 1995-1999 Generating Availability Report.

UDI (Utility Data Institute). 1997 World Power Plants, 3rd Ed., McGraw-Hill Companies, Inc.

TRANSMISSION SYSTEM ENGINEERING

Richard Minetto, P.E. and Laiping Ng

INTRODUCTION

The Transmission System Engineering (TSE) analysis in this Preliminary Staff Assessment (PSA) indicates whether or not the transmission facilities associated with the proposed project conform to all applicable laws, ordinances, regulations and standards (LORS), and will ensure safe and reliable electric power transmission. The analysis includes conditions of certification for compliance.

Duke Energy North America, LLC (DENA), the applicant, proposes to modernize the Morro Bay Power Plant (MBPP) with a new combined-cycle generating facility. The property and project are referred to as the Morro Bay Modernization Project (MBMP). Figure 1 below shows an overall location for the project in San Luis Obispo County and within the City of Morro Bay.

Figure 1 – Location of MBMP

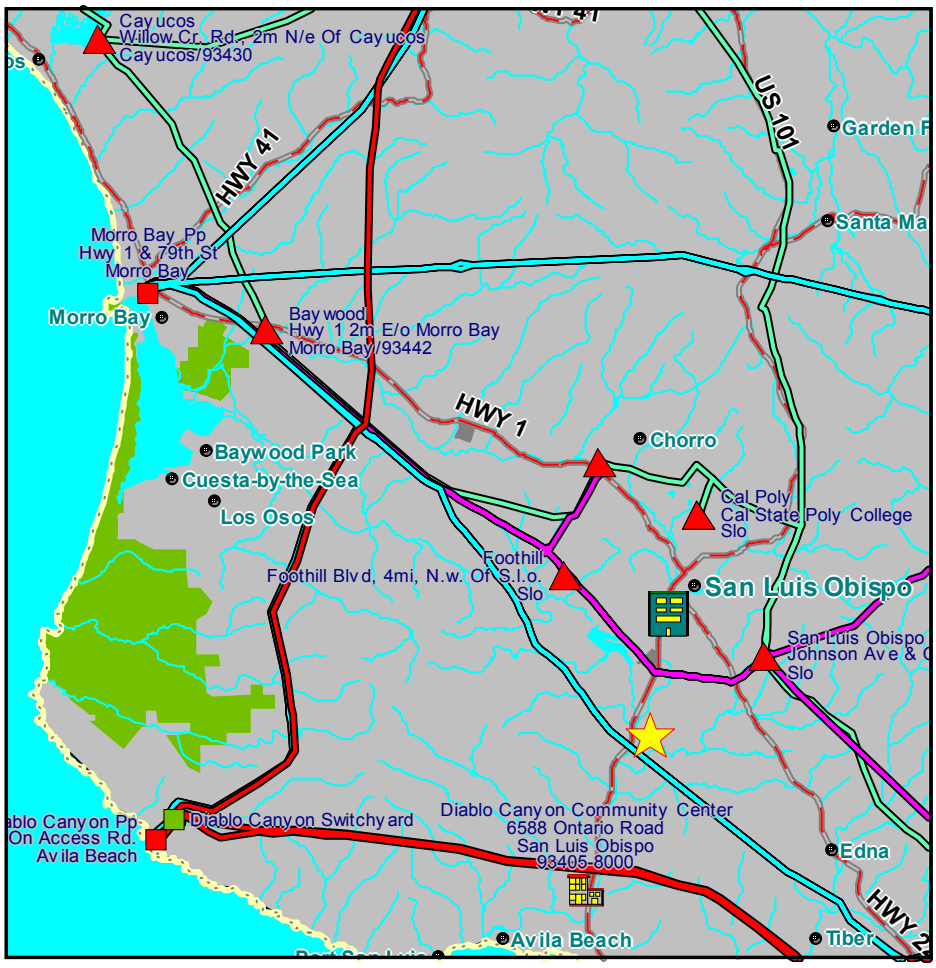

DENA proposes to interconnect the generating facility to the electrical grid through Pacific Gas and Electric Company's (PG&E) 230 kV bus at the Morro Bay Power Plant Switching Station. The California Independent System Operator (Cal-ISO) is responsible for ensuring electric system reliability for all participating transmission owning utilities and determines both the standards necessary to achieve reliability and whether the proposed project conforms to those standards. The Energy Commission will rely on the Cal-ISO's determinations to make its findings related to applicable reliability standards and the need for additional transmission facilities. The Cal-ISO will also provide testimony at the Energy Commission's hearings.

Staff's analysis also evaluates the power plant switchyard, outlet line, termination facilities and outlet alternatives, if applicable, identified by the applicant and provides proposed conditions of certification to ensure that the project complies with applicable LORS during the design, construction, operation and potential closure of the project.

Public Resources Code, section 25523 requires the Energy Commission to "prepare a written decision…which includes: …findings regarding conformity of the proposed site and related facilities…with public safety standards…and with other relevant local, regional, state, and federal standards, ordinances, and laws." Under the California Environmental Quality Act (CEQA) the Energy Commission must conduct an environmental review of the "whole of the action," which may include facilities not licensed by the Energy Commission (CCR, tit. 14, §15378). Therefore, the Energy Commission must identify and evaluate the environmental effects of construction and operation of any new or modified transmission facilities, beyond the project's interconnection with the existing transmission system, that result from the power plant's addition to the California transmission system.

LAWS, ORDINANCES, REGULATIONS AND STANDARDS

- California Public Utilities Commission (CPUC) General Order 95 (GO-95), "Rules for Overhead Electric Line Construction", formulates uniform requirements for construction of overhead lines. Compliance with this order ensures adequate service and safety to persons engaged in the construction, maintenance, operation or use of overhead electric lines and to the public in general.
- CPUC Rule 21 provides standards for the reliable connection of parallel generating stations connected to participating transmission owners.
- Western Systems Coordinating Council (WSCC) Reliability Criteria provides the performance standards used in assessing the reliability of the interconnected system. These Reliability Criteria require the continuity of service to loads as the first priority and preservation of interconnected operation as a secondary priority. The WSCC Reliability Criteria includes the Reliability Criteria for Transmission System Planning, Power Supply Design Criteria, and Minimum Operating Reliability Criteria. Analysis of the WSCC system is based to a large degree on WSCC Section 4 "Criteria for Transmission System Contingency Performance" which requires that the results of power flow and stability

simulations verify established performance levels. Performance levels are defined by specifying the allowable variations in voltage, frequency and loading that may occur on systems other than the one in which a disturbance originated. Levels of performance range from no significant adverse effect outside a system area during a minor disturbance (loss of load or facility loading outside emergency limits) to a performance level that only seeks to prevent system cascading and the subsequent blackout of islanded areas. While controlled loss of generation, load, or system separation is permitted in extreme circumstances, their uncontrolled loss is not permitted (WSCC 1998).

- North American Electric Reliability Council (NERC) Planning Standards provide policies, standards, principles and guides to assure the adequacy and security of the electric transmission system. With regard to power flow and stability simulations, these Planning Standards are similar to WSCC's Criteria for Transmission System Contingency Performance. The NERC planning standards provide for acceptable system performance under normal and contingency conditions, however the NERC planning standards apply not only to interconnected system operation but also to individual service areas (NERC 1998).
- Cal-ISO Reliability Criteria also provide policies, standards, principles and guides to assure the adequacy and security of the electric transmission system. With regard to power flow and stability simulations, these Planning Standards are similar to WSCC's Criteria for Transmission System Contingency Performance and the NERC Planning Standards. The Cal-ISO Reliability Criteria incorporate the WSCC Criteria and NERC Planning Standards. However, the Cal-ISO Reliability Criteria also provide some additional requirements that are not found in the WSCC Criteria or the NERC Planning Standards. The Cal-ISO Reliability Criteria apply to all existing and proposed facilities interconnecting to the Cal-ISO controlled grid.
- Cal-ISO Scheduling Protocols and Dispatch Protocols require conformance with NERC, WSCC, and Local Area Reliability and Planning Criteria. These standards will be applied to the assessment of the system reliability implications of the project. Also of major importance to projects which may sell power to the California deregulated wholesale market are the Cal-ISO Day/Hour Ahead Inter-zonal Congestion Management Scheduling Protocol (SP 10), the Transmission System Loss Management Scheduling Protocol (SP 4), and the Creation of the Real Time Merit Order Stack (SP 11). The Congestion Management Scheduling Protocol requires that the operation of power plants not violate system criteria when market participants request generation dispatch or the use of major interties. The Real Time Merit Order Stack is developed based on increasing energy bid prices so that the least cost bids are accepted early on and so that if congestion is anticipated, the highest bids are not selected. The Transmission System Loss Management `Scheduling Protocol uses the Cal-ISO power flow model to identify total transmission losses at each generating unit and scheduling point. Additional calculations are performed to determine the actual net power output required by the generating units to meet their scheduled obligations. (Cal-ISO 1998a, Cal-ISO 1998b).

- Cal-ISO Participating Generator Agreement consists of detailed explanations of the requirements in the Cal-ISO Tariff pertaining to the paralleled generating unit.

PROJECT DESCRIPTION

Figure 2 below shows an overall one-line diagram for MBMP. The MBMP provides a nominal output of 1200 megawatts (MW) to the PG&E 230 kV grid. While the overall site contains existing power generating units, DENA has proposed the demolition of the existing power facilities subsequent to operation of the new facility. The proposed generation will be located in an area that previously was used to store on site fuel oil. The proposed project site is located in San Luis Obispo County within the City of Morro Bay.

Figure 2 – One Line Diagram

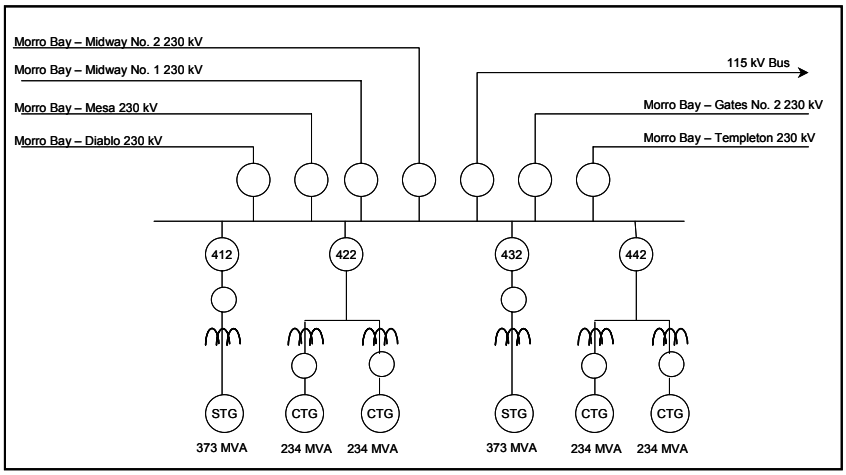

The generation addition has been proposed to consist of four 234 MVA gas combustion turbine generators (CTG), and two 373 MVA steam turbine generators (STG). The CTGs will be fueled by natural gas and air, and the STGs will be driven by exhaust from the CTGs. The output of each generator will be connected to the high voltage system through a dedicated 18/230 kV step-up transformer [1].

Firm design for the interconnection to the existing 230 kV switchyard has not been completed. The proposed site is approximately 300 feet from the perimeter of the existing switchyard. The applicant proposed to construct approximately 1000 feet of single circuit overhead 230 kV line and approximately 2000 feet of double circuit overhead 230 kV line to interconnect the plant output with the existing PG&E switchyard[2]. The switchyard is connected to the electrical grid through a number of 230 kV lines. DENA proposes to interconnect the overhead transmission line through four existing circuit breakers located within the PG&E switchyard.

[1] Draft Morro Bay Modernization Project, System Impact/Facilities Study Report, Page 2, April 9, 2001

[2] Draft Morro Bay Modernization Project, System Impact/Facilities Study Report, Page 2, April 9, 2001

PROJECT SWITCHYARD

The existing switchyard is proposed for interconnection of the plant output. Four existing circuit breakers (CB412, 422, 432, 442) are proposed for protection of the interconnection. The Draft System Impact/ Facilities Study (Draft SI/FS) completed by PG&E concluded that the addition of the MBMP creates no adverse effects on these circuit breakers. All equipment for control and protection for the generating units and unit transformers will be furnished and installed by the applicant.

TRANSMISSION LINE CHARACTERISTICS

The transmission line characteristics required for interconnection to the existing switchyard are not fully defined in the application. Staff has submitted data requests to the applicant to provide additional information regarding the transmission interconnection. This information is required to provide the necessary review of the proposed electrical interconnection to the 230 kV switchyard.

EXISTING FACILITIES AND RELATED SYSTEMS

The MBMP replaces four existing units with a new facility as described above. The project includes the demolition of the existing Units 1 through 4 and their respective stacks. A variety of site improvement initiatives including landscaping, and various pedestrian, bikeway, and vehicle paths are also being proposed as part of the project. The existing units 1 through 4 currently generate 1002 MW.

The output of the new station will tie directly to the PG&E 230 kV switchyard through existing breakers. Because the output of the proposed generation is greater than the existing system, the project may cause impacts on the electrical grid.

SYSTEM RELIABILITY

INTRODUCTION

A DRAFT SI/FS has been prepared by PG&E for the MBMP, and was submitted to the Commission on April 12, 2001. This study determines the effects of connecting a new power plant to the existing electric grid. The study identifies impacts and also ways in which impacts can be minimized or avoided. Any new transmission facilities such as the power plant switchyard, the outlet line, and, downstream facilities required for connecting a project to the grid are considered part of the project and are subject to the full AFC review process.

DRAFT SYSTEM IMPACT/FACILITIES STUDY SUMMARY

The general criteria for identifying thermal overloads uses transmission system power flow simulation modeling under normal (i.e. all elements in service) and emergency (i.e. one or more system elements out of service) conditions. The Cal-ISO Controlled Grid Reliability Criteria indicates that normal overloads are identified as any transmission facility (i.e., transformer bank, transmission line) exceeding 100% of its normal continuous rating. Likewise, contingency (emergency) overloads are identified as any transmission facility exceeding 100% of its continuous rating.

The power flow studies conducted for MBMP indicate that some normal and emergency condition overloads were identified for the various study scenarios. The specific overloaded facilities identified in the Draft SI/FS are as following:

- Steady State Power Flow studies: These studies were conducted using PG&E's 2003 Winter, 2004 Spring, and 2004 Summer WSCC Full Loop Base Cases. These studies analyze adverse impacts to normal operating conditions. Further studies were conducted taking single and multiple lines out of service for contingency analysis.
- Post Transient Power Flow Studies: Studies were conducted for 500 kV double line outages on Path 26.
- Dynamic Stability Study: This study was conducted to ascertain any instability effects of the MBMP following outages of certain other facilities.
- System Protection Study: This study was conducted to ascertain any equipment overloads as a result of the MBMP.
- Substation and Transmission Line Upgrades: Projects associated with the MBMP impacts were identified. These projects may be necessary to mitigate impacts of the interconnection of the MBMP.
- Study Generation Assumptions: Interconnection assumptions were finalized with input and concurrence from DENA, the Cal-ISO, and PG&E. These assumptions provided the basis for the modeling of expected generation and transmission improvement projects for impact assessment.

The intent of the Draft SI/FS is to analyze the potential impacts of the MBMP on the transmission grid. These studies provide the basis for determining any system modifications, Remedial Action Schemes (RAS) or congestion management necessary to prevent criteria violations due to the interconnection of MBMP to the electrical transmission grid.

The Draft SI/FS identifies the following points:

1. Steady State and Contingency Power Flows MBMP:
   a. The Morro Bay-Templeton 230 kV line is 16 % above its normal rating with all lines in service in the summer base case. Prior to MBMP, this line was loaded up to 96 % of its normal rating.
   b. The Morro Bay-Templeton 230 kV had a 25% overload following the outage of the Morro Bay-Gates 230 kV line for the Summer Base Case. Prior to MBMP, this overload was 4%
   c. The San Luis Obispo-Atascadero 70 kV line had a 29% overload following the outage of the Morro Bay-Templeton 230 kV line for the Summer Base Case. Prior to MBMP, this overload was 9%.
   d. The Morro Bay-Templeton 230 kV had a 15% overload following a bus fault on the Mesa 230 kV bus and a subsequent tie breaker failure for the Summer Base Case.

e. The loss of either the Midway 500/230 kV transformer bank for the Summer or Spring Base Cases showed that the remaining parallel 500/230 kV bank overloads beyond its emergency rating during single or multiple contingencies.

2. Post Transient Power Flow Studies:

   a. The double line outage of the Midway-Vincent #1 and #2 500 kV lines overloaded the PG&E portion of the Midway-Vincent #3 500 kV line beyond its emergency rating. This condition was present prior to MBMP and is not the applicant's responsibility.

3. Dynamic Stability Study:

   a. No adverse system impact on the stable operation of the transmission system following selected outages was present for the MBMP.

4. System Protection Study:

   a. No adverse equipment impacts for fault interruption facilities were present for the MBMP.

CAL-ISO SUMMARY

On May 11, 2001, the Cal-ISO issued a preliminary approval to connect the MBMP to the ISO controlled grid. The approval letter stated that:

- The Cal-ISO concurs with the study assumptions, conclusions and recommendations in the System Impact/Facilities Study.
- The Cal-ISO concurs with the proposed mitigation alternatives of the Morro Bay – Templeton 230 kV line to mitigate line overloads under normal conditions. Both rerate and reconductoring of the line would remove transmission line constraints and allow DENA to provide maximum generation output under normal peak load conditions. However, an alternative to line reconductoring and rerate is congestion management. With congestion management, generation output would be curtailed at times to maintain line loading within its rating.
- The Cal-ISO approves the recommendation of using Remedial Action Schemes (RAS) or Special Protection Schemes (SPS) to mitigate facility overloads caused by MBMP under various contingency conditions. DENA should only be responsible for mitigating the impacts of the incremental generation from the MBMP (190 MW). Per the Cal-ISO Grid Planning Criteria, a consideration of RAS/SPS failure should be included in the design of the RAS/SPS.

CONCLUSIONS

The Final SI/FS indicates that there are transmission impacts as a result of the MBMP. Specific alternatives are identified in the Final SI/FS to mitigate negative impacts. Table 1 below shows the proposed mitigation measures as outlined in the Final SI/FS that were determined by the applicant (DUKE 2001).

TABLE 1 – MITIGATION PROPOSALS

Description of Impact	*Mitigation*
Morro Bay-Templeton 230 kV line Normal Overload	Re-rate approximately of 230 kV circuit
Morro Bay-Templeton 230 kV line Emergency Overload	Re-rate approximately of 230 kV circuit
San Luis Obispo-Atascadero 70 kV line Emergency Overload	Congestion Management (generation reduction) and install a special protection scheme

These mitigation measures will assure conformance with WSCC, NERC, and Cal-ISO reliability and planning criteria.

CUMULATIVE IMPACTS

The SI/FS includes substantial potential generation projects. There are no new cumulative environmental impacts resulting from the MBMP relative to transmission connection and operation.

FACILITY CLOSURE

PLANNED CLOSURE

This type of closure occurs in a planned and orderly manner such as at the end of its useful economic or mechanical life or due to gradual obsolescence. Under such circumstances, the requirement for the owner to provide a closure plan 12 months prior to closure, in conjunction with applicable LORS, is considered sufficient to provide adequately for safety and reliability. For instance, a planned closure provides time for the owner to coordinate with the participating transmission owner (PTO)[3] to assure (as one example) that the PTO's system will not be closed into the outlet thus energizing the project substation. Alternatively, the owner may coordinate with the PTO to maintain some power service via the outlet line to supply critical station service equipment or other loads.[4]

UNEXPECTED TEMPORARY CLOSURE

This unplanned closure occurs when the facility is closed suddenly and/or unexpectedly for a short term due to unforeseen circumstances such as a natural or other disaster or emergency. During such a closure the facility cannot insert power into the utility system. Closures of this sort can be accommodated by establishment of an on-site contingency plan (see General Conditions Including Compliance Monitoring and Closure Plan).

[3] The PTO, in this instance, is Pacific Gas and Electric, e.g., the system owner to which the project is interconnected.

[4] These are mere examples, many more exist.

UNEXPECTED PERMANENT CLOSURE

This unplanned closure occurs when the project owner abandons the facility. This is considered to be a permanent closure. This includes unexpected closure where the owner remains accountable for implementing the on-site contingency plan. It can also include unexpected closure where the project owner is unable to implement the contingency plan, and the project is essentially abandoned. An on-site contingency plan, that is in place and approved by the CPM prior to the beginning of commercial operation of the facilities, will be developed to assure safety and reliability (see General Conditions Including Compliance Monitoring and Closure Plan).

CONCLUSIONS AND RECOMMENDATIONS

CONCLUSIONS

Based on the review of the SI/FS, the Cal-ISO grants preliminary approval to connect the MBMP to the grid. Additional information is still needed from the Applicant for use by staff in preparation of the Final Staff Analysis.

1. Staff's findings indicate that with the mitigation measures proposed by the applicant, the project will meet NERC, WSCC, and Cal-ISO reliability criteria.
2. The Cal-ISO will confirm staff's conclusion prior to issuance of the Final Staff Assessment.
3. DENA will need to provide additional information relevant to the transmission interconnection of the MBMP to the existing switchyard .
4. The power plant and switchyard are acceptable and will comply with LORS assuming the conditions of certification are implemented.
5. The issuance of the Cal-ISO's final interconnection approval will assure conformance with NERC, WSCC and Cal-ISO reliability criteria. A condition of certification TSE-1d provides for Energy Commission review of the Cal-ISO final interconnection approval letter and the PG&E/applicant Facility Interconnection Agreement.

RECOMMENDATIONS

Staff proposes the following preliminary conditions of certification to ensure system reliability and conformance with LORS.

CONDITIONS OF CERTIFICATION

TSE-1 The project owner shall ensure that the design, construction and operation of the proposed transmission facilities will conform to requirements listed below. The substitution of Compliance Project Manager (CPM) approved "equivalent" equipment and equivalent switchyard configurations is acceptable.

a) The power plant switchyard, outlet line and termination shall meet or exceed the electrical, mechanical, civil and structural requirements of CPUC General Order 95, Title 8, CCR, Articles 35, 37 and 37 of the, "High Voltage Electric Safety Orders", National Electric Code (NEC), and

b) Breakers and busses in the power plant switchyard and other switchyards, where applicable, shall be sized to comply with a short-circuit analysis.

c) Termination facilities at the interconnection shall comply with applicable Cal-ISO and PG&E interconnection standards (PG&E Interconnection Handbook and CPUC Rule 21).

d) The applicant shall provide an executed Generator Special Facilities Agreement (GSFA) for the transmission interconnection with PG&E. The GSFA shall be coordinated with and approved by the Cal-ISO.

Verification: At least 60 days prior to start of construction of transmission facilities, the project owner shall submit for approval to the CPM:

a) Design drawings, specifications and calculations conforming with CPUC General Order 95 and related industry standards, where applicable, for the poles/towers, foundations, anchor bolts, conductors, grounding systems and major switchyard equipment.

b) For each element of the transmission facilities as identified above, the submittal package to the CPM shall contain the design criteria, a discussion of the calculation method(s), a sample calculation based on "worst case conditions" and a statement by the registered engineer in responsible charge (signed and sealed) that the transmission element(s) will conform with CPUC General Order 95, Title 8, CCR, Articles 35, 36 and 37 of the, "High Voltage Electric Safety Orders", the NEC, PG&E Interconnection Handbook, CPUC Rule 21 and related industry standards.

c) Electrical one-line diagrams signed and sealed by the registered professional electrical engineer in responsible charge, a route map, and an engineering description of equipment and the configurations covered by requirements a through d above. Substitution of equipment and substation configurations shall be identified and justified by the project owner for CPM approval.

TSE-2 The project owner shall inform the CPM of any impending changes, which may not conform to the requirements a) through d) of TSE-1, and have not received CPM approval, and request approval to implement such changes. A detailed description of the proposed change and complete engineering, environmental, and economic rationale for the change shall accompany the request. Construction involving changed equipment, transmission facilities or switchyard configurations shall not begin without prior written approval of the changes by the CPM.

Verification: At least 60 days prior to construction of transmission facilities, the project owner shall inform the CPM of any impending changes which may not

conform to requirements of TSE-1 and request approval to implement such changes.

TSE-3 The project owner shall be responsible for the inspection of the transmission facilities during and after project construction and any subsequent CPM approved changes thereto, to ensure conformance with CPUC General Order 95, Title 8, CCR, Articles 35, 36 and 37 of the, "High Voltage Electric Safety Orders", the NEC, PG&E Interconnection Handbook, CPUC Rule 21 and related industry standards. In case of non-conformance, the project owner shall inform the CPM in writing within 10 days of discovering such non-conformance and describe the corrective actions to be taken

Verification: Within 60 days after first synchronization of the project, the project owner shall transmit to the CPM:

a) "As built" engineering description(s) and one-line drawings of the electrical portion of the facilities signed and sealed by the registered electrical engineer in responsible charge. A statement attesting to conformance with CPUC General Order 95, Title 8, CCR, Articles 35, 37 and 37 of the, "High Voltage Electric Safety Orders", the NEC, PG&E Interconnection Handbook, CPUC Rule 21 and related industry standards, and these conditions shall be concurrently provided.

b) An "as built" engineering description of the mechanical, structural, and civil portion of the transmission facilities signed and sealed by the registered engineer in responsible charge shall be maintained at the project site.

c) A summary of inspections of the completed transmission facilities, and identification of any nonconforming work and corrective actions taken, signed and sealed by the registered engineer in responsible charge.

REFERENCES

Cal-ISO (California Independent System Operator). 1998a. Cal-ISO Tariff Scheduling Protocol posted April 1998, Amendments 1,4,5,6, and 7 incorporated.

Cal-ISO (California Independent System Operator). 1998b. Cal-ISO Dispatch Protocol posted April 1998.

Cal-ISO (California Independent System Operator) 2001??. Cal-ISO Preliminary Approval Letter for MBMP, submitted to the California Energy Commission onMay 11, 2001.

DUKE (Duke Energy, North America) 2001 Comments to Morro Bay System Impact/facilities Study submitted to Pacific Gas and Electric Co. on April 16, 2001

DUKE (Duke Energy, North America) 2001??. Letter to CEC/Lewis from DENA, dated May 10, 2001. Transmitted to California Energy Commission on May 10, 2001.

MBMP (Morro Bay Modernization Project) 2000. Application for Certification Volumes I-IV and subsequent data, Morro Bay Modernization (00-AFC-12). Submitted to the California Energy Commission on October 23, 2000 and supplemented on December 8, 2000.

NERC (North American Electric Reliability Council). 1998. NERC Planning Standards, September 1997.

PG&E (Pacific Gas and Electric) 2001. Draft System Impact/Facilities Study. Submitted to the California Energy Commission on April 12, 2001.

PG&E (Pacific Gas and Electric) 2001 Response letter to DENA on comments to Morro Bay System Impact/facilities Study submitted to CAISO on April 17, 2001.

PG&E (Pacific Gas and Electric) 2001. Final System Impact/Facilities Study. Submitted to the California Energy Commission on May 14, 2001.

WSCC (Western Systems Coordinating Council) 1997. Reliability Criteria, August 1998.

DEFINITION OF TERMS

AAC — All Aluminum conductor.

Ampacity — Current-carrying capacity, expressed in amperes, of a conductor at specified ambient conditions, at which damage to the conductor is nonexistent or deemed acceptable based on economic, safety, and reliability considerations.

Ampere — The unit of current flowing in a conductor.

Bundled — Two wires, 18 inches apart.

Bus — Conductors that serve as a common connection for two or more circuits.

Conductor — The part of the transmission line (the wire) which carries the current.

Congestion Management
Congestion management is a scheduling protocol, which provides that dispatched generation and transmission loading (imports), will not violate criteria.

Downstream Facilities
Transmission lines, substations, switching stations and related equipment required to reliably accommodate the project that are beyond the point where the outlet line joins with the existing interconnected system.

Emergency Overload
See Single Contingency. This is also called an L-1.

Kcmil or kcm
Thousand circular mil. A unit of the conductor's cross sectional area, when divided by 1,273, the area in square inches is obtained.

Kilovolt (kV)
A unit of potential difference, or voltage, between two conductors of a circuit, or between a conductor and the ground.

Loop — An electrical cul de sac. A transmission configuration which interrupts an existing circuit, diverts it to another connection and returns it back to the interrupted circuit, thus forming a loop or cul de sac.

Megavar — One megavolt ampere reactive.

Megavars Mega-volt-Ampere-Reactive. One million Volt-Ampere-Reactive. Reactive power is generally associated with the reactive nature of motor loads that must be fed by generation units in the system.

Megavolt ampere (MVA)
A unit of apparent power, equals the product of the line voltage in kilovolts, current in amperes, the square root of 3, and divided by 1000.

Megawatt (MW)
A unit of power equivalent to 1,341 horsepower.

Normal Operation/ Normal Overload
When all customers receive the power they are entitled to without interruption and at steady voltage, and no element of the transmission system is loaded beyond its continuous rating.

N-1 Condition
See Single Contingency.

Outlet Transmission facilities (circuit, transformer, circuit breaker, etc.) linking generation facilities to the main grid.

Power Flow Analysis
A power flow analysis is a forward looking computer simulation of essentially all generation and transmission system facilities that identifies overloaded circuits, transformers and other equipment and system voltage levels.

Reactive Power
Reactive power is generally associated with the reactive nature of motor loads that must be fed by generation units in the system. An adequate supply of reactive power is required to maintain voltage levels in the system.

Remedial Action Scheme (RAS)
A remedial action scheme is an automatic control provision, which, for instance, will trip a selected generating unit upon a circuit overload.

Re-rate
Change the wind speed or other factor to provide a higher rating for the transmission line.

SF6 Sulfur hexafluoride is an insulating medium.

Single Contingency
: Also known as emergency or N-1 condition, occurs when one major transmission element (circuit, transformer, circuit breaker, etc.) or one generator is out of service.

Solid dielectric cable
: Copper or aluminum conductors that are insulated by solid polyethylene type insulation and covered by a metallic shield and outer polyethylene jacket.

Switchyard
: A power plant switchyard (switchyard) is an integral part of a power plant and is used as an outlet for one or more electric generators.

Thermal rating
: See ampacity.

TSE
: Transmission System Engineering.

Undercrossing
: A transmission configuration where a transmission line crosses below the conductors of another transmission line, generally at 90 degrees.

Underbuild
: A transmission or distribution configuration where a transmission or distribution circuit is attached to a transmission tower or pole below (under) the principle transmission line conductors.

ALTERNATIVES

Susan V. Lee

INTRODUCTION

The purpose of staff's alternatives analysis is to consider whether there are alternatives that could (1) feasibly attain the most of the basic objectives of the project, and (2) avoid or substantially lessen one or more of the significant effects of the project. If the Energy Commission identifies an alternative that meets these criteria, it does not have the authority to approve the alternative or require the applicant to move the proposed project to another location. However, in the event that the Energy Commission identifies significant adverse impacts that cannot be mitigated, the alternatives analysis is crucial, as the Commission could not license the project in that situation if there were feasible alternatives. If a project is proposed at one of the alternative sites, a new Application for Certification must be filed on that site and a new review process would ensue.

Energy Commission staff is required by Title 20, California Code of Regulations Section 1765 (part of the Energy Commission's siting regulations) to examine the "feasibility of available site and facility alternatives to the applicant's proposal which substantially lessen the significant adverse impacts of the proposal on the environment". The "Guidelines" for implementation of the California Environmental Quality Act" (CEQA), Title 14, California Code of Regulations, Section 15126.6, provides further direction by requiring an evaluation of the comparative merits of "a range of reasonable alternatives to the project, or to the location of the project, which would feasibly attain most of the project objectives." The analysis identifies and compares the impacts of the various alternatives, but in less detail than the analysis of the proposed project.

Duke's AFC (MBPP AFC 5-1 to 5-2) stated that "modification of an existing facility is exempt from … the requirement to consider offsite alternatives." Staff notes that Duke's proposed project requires construction of an entirely new generating facility and the eventual demolition of the existing power plant. If demolition of the existing plant is assumed with the current proposal, staff believes that such demolition can also be assumed to occur in conjunction with alternatives that could be constructed at other sites[1]. Therefore, Commission staff is providing an analysis of a full range of alternatives.

METHODOLOGY

To prepare this alternatives analysis, staff used the methodology summarized below:

[1] It is noted, however, that Duke has stated that "… if the proposed power project is not sited at the existing Morro Bay Power Plant, operations at the current plant will continue in operation with at least units 3 and 4 as they might be modified with retrofit installation SCR emission control systems" (Duke, 2001b).

- Identified the basic objectives of the project;
- Provided an overview of the project and its potentially significant adverse impacts;
- Evaluated the No Project alternative;
- Identified and evaluated feasible alternative electricity generation technologies;
- Considered other alternatives (smaller plant; different configurations)
- Identified screening criteria for alternative sites;
- Conducted a screening analysis to assess the feasibility of alternative sites;
- Determined whether the alternative technologies and sites reduced or avoided any significant impacts of the proposed project;
- Determined whether the alternative technologies and sites would cause one or more impacts that could be significant.

BASIC PROJECT OBJECTIVES

After reviewing the Morro Bay Power Project (MBPP) Application for Certification (AFC), Energy Commission staff has developed the following project objectives:

- The construction and operation of a highly efficient merchant power plant in the San Luis Obispo County region that supplies economic, reliable and environmentally sound electrical energy and capacity;
- The generation of approximately 1,200 MW (net) of electricity;
- The location of the site near key infrastructure, such as transmission line interconnections (230-kV or greater), and supplies of process water and natural gas;
- Maintenance of local electric reliability while reducing electric system losses.

The Applicant's objectives also include use of the existing site, because it believes that use of that site for a new plant (and the subsequent demolition of the existing plant) would improve the environment in the Morro Bay, reduce overall impacts, and allow development of a facility that could operate at maximum efficiency. However, while there are clearly advantages to use of existing infrastructure, there are also potential environmental impacts of continued operation at the existing site, as documented in this Staff Assessment. Therefore, staff did not include the Applicant's objective of use of the existing site in this analysis.

SUMMARY OF PROPOSED PROJECT

On October 23, 2000 Duke Energy Morro Bay LLC filed an Application for Certification (AFC) seeking approval from the California Energy Commission (Energy Commission) to construct and operate the proposed 1,200-megawatt (MW) Morro Bay Power Plant Project. The "modernization" Project is proposed to be located at the existing 1,002 MW Morro Bay Power Plant site that is owned and

operated by Duke Energy. This site is located within the City of Morro Bay, San Luis Obispo County, near Morro Bay Harbor, bordered on the west by Embarcadero Road and on the east by Highway 1.

The new units will replace currently operating generation Units 1 and 2 (326 megawatts [MW], 1950's technology) and Units 3 and 4 (676 megawatts [MW], 1960's technology) with two state-of-the-art 600 MW combined cycle units. Each new unit will be capable of producing 600 MW, so that upon completion of both phases, the Plant will be capable of producing a total of 1,200 MW. Each new unit will consist of two gas-fired turbines and one steam turbine driven by the heat produced by the other two turbines. Each new unit will have two, 145 foot tall stacks compared with the existing plant's three 450 foot tall stacks.

The combined cycle units are expected to use a maximum of 165,000 gallons per minute (gpm) each (464,000 gpm when both are operating) of seawater for cooling and boiler makeup, which is a reduction of 29 percent from the existing plant's usage. MBPP's freshwater usage will be about 10,000 gallons per day (gpd) from its onsite wells for routine operation.

Natural gas will be delivered from PG&E's Kettleman Compressor Station through PG&E pipeline 306. Natural gas originates from the south with El Paso Natural Gas in Arizona and from the north with PG&E/Northwest in Oregon.

The MBPP will continue to interconnect with the electrical grid at the existing PG&E switchyard located on the plant site.

To control emissions of air pollutants, the MBPP's combined cycle units will use the best available control technology (BACT) including selective catalytic reduction (SCR) for control of nitrogen oxides and an oxidation catalyst for control of carbon monoxide. The SCR system consists of the reduction catalyst and an aqueous ammonia injection system.

Duke Energy proposes construction of two new generating units in a single construction phase lasting 21 months, with initial start-up to follow one month later. Based on construction beginning in the winter of 2001, initial start-up will occur in the fall of 2002 and full-scale commercial operation will begin in fall 2003.

The Project will also include demolition of the onsite fuel oil tank farm, the existing power plant, and the three 450 feet tall exhaust stacks. Demolition would be completed in three stages:

- Stage One: Demolition of the tank farm would begin immediately after commissioning of the Project. It will take three months and is expected to be complete in 2001.
- Stage Two: Demolition of the three 450 foot stacks will begin after commercial operation of the new units and will be complete by 2004.
- Stage Three: Existing generating units will be dismantled by the end of 2007.

A series of traffic, landscaping and aesthetic features are also proposed as part of the Project, including bike paths, installation of a bridge across Morro Creek, landscaping, and refurbishment of the sea water intake structure.

The applicant chose the proposed site for this project for following reasons:

- Infrastructure for the power plant is already in place;
- The site is adjacent to the PG&E Morro Bay Switchyard where the applicant will connect to the transmission system;
- The site contains existing once-through seawater cooling water intake and discharge structures;
- Because of existing infrastructure, the applicant believes that use of the existing site would result in a lower level of environmental impact when compared to other site possibilities within San Luis Obispo County;

POTENTIAL SIGNIFICANT ENVIRONMENTAL IMPACTS

Staff's preliminary assessment of environmental impacts is presented in detail in the individual sections of this Staff Assessment. Issues of concern identified in those sections (some are preliminary at this time) are the following:

- Project Description: Selection of off-site laydown areas has not yet determined, resulting disturbance impacts need to be considered.
- Biological Resources: Potentially significant marine biological impacts from entrainment have been identified in the 316(b) biological studies.
- Cultural Resources: Determination of impacts on Morro Rock and historic resources.
- Visual Resources: Possible significant impacts may be attributed to (a) the construction laydown site if located near a scenic highway, (b) nighttime lighting, and (c) long-term visual impacts from the beach and trailer park.
- Soil/Water: Concerns are due to potential impacts resulting from (a) use of cooling water from Morro Bay, (b) MBPP's pumping of groundwater on City wells, (c) possible flooding, and (d) adequacy of MPBB's stormwater and erosion control plans.

The following sections first present alternatives that were eliminated from detailed consideration, and explain why these alternatives were not analyzed. Subsequent sections present alternatives analyzed in detail, including the No Project Alternative and site alternatives (involving construction of a 1,200 MW power plant in a different location).

ALTERNATIVES OUTSIDE THE SCOPE OF DETAILED CONSIDERATION

Public Resources Code Section 25305(c) states that conservation, load management, or other demand reducing measures reasonably expected to occur shall be explicitly examined in the Energy Commission's energy forecasts and shall not be considered as alternatives to a proposed facility during the siting process. The forecast that will address this issue is the Commission's California Energy Outlook. Thus, such alternatives are not included in this analysis.

The following sections define alternatives that are not considered herein for detailed analysis and explain why they were eliminated.

GENERATION TECHNOLOGY ALTERNATIVES

Staff compared various alternative technologies with the proposed project. We examined the principal electricity generation technologies that do not burn fossil fuels such as natural gas. These are geothermal, solar, hydroelectricity, wind, biomass, waste-to-energy. Staff also considered coal and nuclear power generation to provide a thorough analysis of alternative generation technologies.

GEOTHERMAL, SOLAR POWER, WIND, HYDROELECTRIC POWER

Solar, wind and hydroelectricity resources would require large land areas in order to generate 1,200 megawatts of electricity. Each of these technologies is described briefly below.

Geothermal Resources. Geothermal technologies use steam or high-temperature water (HTW) obtained from naturally occurring geothermal reservoirs to drive steam turbine/generators. There are vapor dominated resources (dry, super-heated steam) and liquid-dominated resources (LDR) where various techniques are utilized to extract energy from the HTW. Geothermal is a commercially available technology, but it is limited to areas geologic conditions resulting in high subsurface temperatures. Even in areas where such conditions are present, there have been issues with the reliability of the steam supply and the corrosiveness of the supply. There are no viable geothermal resources in the San Luis Obispo County region.

Solar. Solar radiation (sunlight) can be collected to generate electricity via solar thermal and solar photovoltaic technologies. These technologies are largely infeasible for the Morro Bay area due to their large land requirements and the lack of consistent sunshine. For example, centralized solar projects using the parabolic trough technology require at least approximately 5 acres per MW; consequently 1,200 MW would require at least 6,000 acres, more than 600 times the amount of space used by the proposed combined-cycle facility.

Wind. Wind generation, while it does not require use of fossil fuels, also has environmental effects. Wind farms large enough to produce significant quantities of electricity require use of large amounts of land, can have significant visual impacts,

and in some areas, they have resulted in a large number of raptor deaths. The noise generated by the wind turbines can also be of concern.

Generation from wind is not always available because, even in prime locations, the wind does not blow continuously. In California, the average wind generation capacity factor has been 25 to 30 percent. Although the cost of wind-generated energy, with the inclusion of federal production tax credits, is somewhat competitive, such low production cost is highly dependent on a very high quality wind resource. Such a resource does not exist within over 100 miles of Morro Bay. Because centralized wind generation areas generally require 40 to 50 acres per MW, generation of 1,200 MW would require 48,000 to 60,000 acres.

Hydroelectric Power. Hydroelectric facilities do exist in San Luis Obispo County (e.g., Lopez Lake, Lake Nacimiento, Whale Rock Reservoir and Santa Margarita Lake) (MBPP AFC 5-43). However, new large hydroelectric facilities capable of generating 1,200 megawatts would require inundation of more than 70,000 acres with water, resulting in extensive biological and environmental impacts.

BIOMASS

Major biomass fuels include forestry and mill wastes, agricultural field crop and food processing wastes, and construction and urban wood wastes. Several techniques are used to convert these fuels to electricity, including direct combustion, gasification, and anaerobic fermentation. Biomass facilities do not require the extensive amount of land as the other renewable energy sources discussed above. However, most biomass facilities produce only small amounts of electricity (in the range of 5-25 MW), not meeting project objectives. Biomass facilities also generate significant air emissions and require numerous truck deliveries to supply the plant with the waste. Also, in waste-to-energy facilities there is some concern regarding the emission of toxic chemicals, such as dioxin, and the disposal of the resultant toxic ash.

CONCLUSIONS REGARDING NON-FOSSIL FUEL ENERGY SOURCES

The renewable energy technologies discussed above have the potential for significant land use, biological, air quality, noise, and visual impacts. In addition, the generation of 1,200 MW of electricity from these sources would require major commitments of land or other resources. Any new renewable power facility would require connection to the transmission grid, so impacts of constructing such transmission line interconnections would also need to be considered. Consequently, staff does not believe that these technologies present feasible alternatives to the proposed project.

COAL

Staff also considered the option of building a coal-fired power plant. Conventional boiler steam turbine technology using coal as a fuel would be feasible for commercial scale generation. However, coal would have to be imported from outside California, resulting in increased truck and/or train traffic, and coal storage issues. Furthermore, coal combustion results in a higher level of emissions than that for natural gas burning facilities. The Energy Element of the San Luis Obispo

County General Plan would allow use of coal only if other cleaner fuels became unavailable. For these reasons staff concluded that this alternative technology option is not feasible.

NUCLEAR POWER

Staff did not consider a nuclear power plant alternative. The Diablo Canyon nuclear facility, owned and operated by PG&E, is already operating in San Luis Obispo County. California law prohibits new nuclear plants until the scientific and engineering feasibility of disposal of high-level radioactive waste has been demonstrated. Consequently, staff concluded that nuclear power is not a feasible alternative.

SMALL POWER PLANTS

Staff also considered the possibility of a smaller sized alternative, such as a 240 MW gas fired combined cycle project located at the MBPP site. This is only about 20% of the electricity the applicant proposes to construct, but is considered here as an alternative in order to facilitate a thorough analysis of project options. This smaller project would significantly reduce the amount of cooling water required for the project thereby reducing the quantity of biota impinged or entrained and reducing the size of the thermal plume. However, this could also result in a higher thermal discharge temperature than the proposed project. This alternative would reduce the impacts associated with construction of the large new facility (traffic, noise, and dust). However, it would not eliminate potentially significant impact on biological and water resources because the same cooling sources and discharges would be used. This alternative would also not fully meet the project objectives, which require development of 1,200 MW of generation. This objective is especially critical in today's energy environment. Therefore, the development of a smaller facility was eliminated from consideration.

PARTIAL UPGRADE ALTERNATIVE

The AFC (MBPP AFC 5-7) presents an alternative based on the scenario in Duke's August 1999 AFC, in which:

- Units 3 and 4 (the newer, 1960's technology units with 676 MW capacity) would continue to operate indefinitely
- Units 1 and 2 (the older and smaller, 326 MW units) would be replaced by a new 500 megawatt (MW) combined-cycle facility.

According to Duke, this proposal was made because existing Units 3 and 4 at MBPP are competitive in the California energy market. However, in response to the 1999 AFC, the City of Morro Bay sought the complete and early demolition of the existing units as a condition of its support for the modernization Project. As a result, Duke agreed to withdraw the AFC in October 1999.

Following withdrawal of the 1999 AFC, Duke, the City of Morro Bay, and residents participated in discussions of how the use of the site could be improved. As a result of those discussions, the proposed modernization project was developed and the current AFC was prepared and submitted.

The Partial Upgrade Alternative is therefore eliminated because it would have substantially greater visual impacts than the proposed project, and it would have greater air quality impacts due to the continued use of the older turbines.

OTHER ALTERNATIVES CONSIDERED IN THE AFC

The AFC (MBPP AFC 5-17 to 5-38) considers several other alternatives: (1) different structure alternatives for enclosing the new units, (2) alternative cooling technologies, (3) changes to the cooling water discharge location or the water intake system, and (4) alternative configurations of the new units within the existing MBPP site. These alternatives are not considered in this section but are considered in the Staff Assessment sections addressing the issues relevant to the resources that would be affected. Structure alternatives, if required to mitigate visual impacts, will be considered in the Visual Resources Section. Cooling technologies are addressed in the Soils and Water Resources Section, and cooling water discharge/intake options are considered in the Biological Resources Section.

The AFC presented four configurations within the onsite tank farm area as alternatives to the configuration proposed for the project (MBPP AFC 5-15 to 5-16 and AFC Figure 5-2): (1) the new units perpendicular to each other (the configuration selected as the Project as defined by this AFC); (2) stacks back to back, plant configuration perpendicular to the coast (shift to northern most section of the tank farm); (3) stacks in a row, perpendicular to the coast; and (4) stacks back to back, plant configuration perpendicular and parallel to the coast to form two sides and the corner of a square. These configurations were the subject of detailed discussions between Duke, the City of Morro Bay, and residents. The result of these discussions was the development of the proposed project's configuration, which was determined to be preferred over the alternative configurations. Staff considers that the four configurations are therefore essentially design options that lead to the development of the proposed project. As a result, the alternative configurations described in the AFC are not evaluated as project alternatives.

ALTERNATIVES ANALYZED

The following sections evaluate several alternatives in comparison to the proposed MBPP project: the No Project Alternative, and six alternative power plants sites.

THE NO PROJECT ALTERNATIVE

The CEQA Guidelines state, "The purpose of describing and analyzing a No Project Alternative is to allow decision makers to compare the impacts of approving the proposed project with the impacts of not approving the proposed project." (Cal. Code Regs., tit. §15126.6(i).) Toward that end, the No Project analysis considers "existing conditions" and "what would be reasonably expected to occur in the foreseeable future if the project were not approved…" (§15126.6(e)(2)).

In Duke's response to Data Request Letter 23 (Duke, 2000a), several No Project operational scenarios are described based on the potential for the existing plant to run at 30, 39, and 59 percent of capacity. Which of these scenarios would actually

occur in the absence of the new project and over what period of time would depend primarily on statewide factors such as:

- Levels of economic growth
- Natural gas prices (higher gas prices could lead to greater electricity consumption)
- Conservation policies and their effectiveness
- Weather (hotter or cooler than normal summers, high or low hydroelectric production as a result of varying levels of winter precipitation)
- Imports of electricity
- Wholesale power policies
- Whether or not new power plants are constructed or planned re-power of existing plants occurs
- Transmission system congestion or improvements.

After consideration of information presented by Duke, the No Project Alternative has been defined as follows. The No Project Alternative assumes that the proposed project is not constructed. The existing plant would be left "as is". Initially, Units 1-4 would remain in operation, and the three existing 450-foot tall stacks would remain in place. No new combined-cycle units would be added. Due to the age of Units 1 and 2, it is assumed that these units would remain in service for about five years, and that Units 3 and 4 only would continue to operate, but a lower levels, subsequent to that. Based on this speculative timeframe, in combination with Duke's three scenarios (59, 39, and 30 percent of capacity described above), the No Project Alternative is assumed to be as follows:

- 2002 to 2006: Units 1 through 4 operational (total capacity averaging 59% of current, or producing about 590 MW which was the output of the existing plant in the year 2000)
- 2006 to 20010: Units 3 and 4 only, operating at 39% of current, or about 390 MW
- After 20010: Units 3 and 4 only, operating at 30% of current capacity, or about 300 MW)

The MBPP AFC (pages 5-8 to 5-9) states that the No Project Alternative would result in greater environmental effects than the proposed project. However, when Duke provided details on the specific environmental effects of the No Project Alternative (estimated for three operational scenarios in Duke's Data Response, Duke, 2001a), it was clear that some effects were greater under the proposed project than in the No Project scenario. The No Project scenario effects detailed by Duke include:

- Greater environmental impacts in terms of operational noise and use of greater amounts of cooling water per MW-hour of energy produced.

- Some air pollutants in the No Project scenarios would be generally greater than for the new project (NOx, CO, VOC) and others would be generally less in the No Project scenarios (SOx, CO2, and PM10). Changes in air emissions were estimated by Duke as follows:
  - NOx emissions could be 17% lower than those of the new project at the 30% capacity level, but up to 62% greater than the new project at 59% capacity
  - SOx emissions would be between 35 and 65% of those of the proposed project
  - CO emissions in the No Project scenarios would be between 29 and 250% greater than those of the new project
  - CO2 emissions would be lower than emissions of the new project in all No Project scenarios, ranging from 42% (at low capacity) to 82% (at higher capacity) of new project emissions
  - VOC emissions could range from 90% to 174% of the new project
  - PM10 emission would be less in all No Project scenarios, ranging from 48 to 93% of new project emissions.
- Reduced efficiency in power generation, resulting in higher energy production costs.
- Potential reduced reliability during periods of high electricity demand as a result of continued operation of older generating units.
- Existing Units 1 through 4 at MBPP would be required to meet stringent new air emission levels restriction by adding selective catalytic reduction (SCR) which would also be used by the proposed project to control emissions. The older units would require larger onsite storage quantities of ammonia and increased transport and storage of hazardous materials at the existing site. Even with the SCR retrofit technology for the existing boilers, emissions would be higher than with SCR technology applied to new combined cycle units.
- The capacity of the existing facility is 198 MW less than the proposed project at 1200 MW. However, Duke's No Project scenarios present further reduced capacity estimates of future operational levels, depending on supply and demand conditions defined above, ranging from 30 to 59% of existing plant capacity. The replacement of this (future) power would require addition of small modern power generation plant at another location

With respect to local, state, and regional transmission and distribution of electricity, the current system transmits power generated (a) to local demand (30% to 40% of power generated; DUKE, 2001), and (b) into the regional transmission system at PG&E's Gates substation (near Coalinga in the Central Valley) for the MBPP switchyard. The No Project Alternative would maintain this current system. The proposed project would result in the increased power generated by the MBPP to serve both local and regional demand, thereby improving the State's overall electrical reliability.

As for the visual impacts, under the No Project alternative the three 450-foot smokestacks and the fuel storage tanks, and the existing generating building would not be removed, thereby maintaining the visual impact that exists today. Duke proposes to remove the large exhaust stacks and replace them with four 145-foot exhaust stacks, thus slightly reducing the visual impact of the power plant. Duke also proposes to remove the large fuel storage tanks and the main generating structure on the property, thus further reducing the visual impact of the power plant. In this regard, the proposed project would be superior to the No Project Alternative.

Water quality and biological resources impacts of the No Project Alternative would be less than those of the proposed project because the plant capacity would be significantly less. Water intake and discharge would be reduced, thus reducing impacts to the marine environment.

The No Project Alternative would have substantially less of an impact on traffic than would the proposed project. Since there would be no construction, there would be no construction-related traffic along Highway 1, Highway 41, and other areas adjacent to the existing plant site in the center of the City of Morro Bay.

Under the No Project scenario, existing operational impacts would continue to occur, but at diminishing levels due to the expected reduction in operational levels of the plant over time. These operational impacts include the continued visual impacts of the facility itself, noise and air quality impacts, and to some extent, marine biological and water quality effects of the existing plant. The No Project scenario would avoid the construction-related impacts of the proposed project (primarily related to increased traffic, construction noise, visual resources, and air emissions) because no new construction would occur, and demolition of the existing plant would not occur.

SITE ALTERNATIVES

DETERMINING THE GEOGRAPHIC AREA FOR SITE ALTERNATIVES

In considering site alternatives, the staff had to determine a reasonable geographical area within which a plant could be located and still meet project objectives. Since alternatives must consider the underlying objectives of the proposed project as listed above, staff confined the geographic area of site alternatives to (a) the San Luis Obispo County region, and (b) sites that have existing transmission capacity to the Morro Bay area.

The AFC (MBPP AFC 5-5) argues that the power plant is a “coastal dependent” facility because it relies on seawater for cooling. Under this argument, only coastal sites could be considered in an alternatives analysis. However, current technologies allow use of reclaimed water or potable water for cooling (assuming that sufficient supplies exist), and cooling towers can be used. Therefore, this analysis was not restricted to coastal locations.
The AFC presents several key criteria required for reasonable selection of an offsite alternative, as shown in **ALTERNATIVES Table 1**.

ALTERNATIVES Table 1
Criteria for Offsite Alternatives

AFC Criteria for Offsite Alternatives *	Staff Response
For a coastal location, a potential alternative site would have to be among those areas identified by the CCC in 1978 as a location that is not inappropriate for a power plant pursuant to Section 30416(b) of the CCA.	A new coastal site would be difficult to permit given current regulations and land uses. Therefore, only non-coastal alternative sites are considered herein.
The potential alternative site would also have to be among those areas identified in 1978 by the Commission as suitable for a power plant.	Staff is not bound to consider only sites identified in 1978.
The potential alternative site would have to be zoned or be capable of being rezoned "Heavy Industrial" or "Coastal Dependent Industrial."	Agreed.
The site would have to be large enough to support construction of a 1,200 MW generating facility.	Agreed.
The site would need to have sufficient existing infrastructure, or access thereto within a reasonable distance, to support a 1,200 MW generating facility, including • Natural gas pipelines (20-inch or larger). • Major roads to support deliveries and operations. • Water for utilities and cooling (e.g., ground water, wastewater treatment facility effluent). • Reasonable proximity to an existing transmission line system to facilitate connecting transmission lines and switching facilities (230-kV or higher and with the capacity for the new plant).	Agreed.

* MPPP AFC 5-6

None of these alternative sites has been subjected to an in-depth analysis similar to that conducted for the MBPP site. However, the analysis of each alternative site provides adequate information for the decision-makers consistent with CEQA and Energy Commission regulations.

ALTERNATIVE SITE SCREENING ANALYSIS

Alternative sites were identified through a review of the applicant's AFC and an analysis of site availability within and around San Luis Obispo County. The AFC did not present any alternative sites. The public has suggested consideration of Duke's tank farm in the hills, northeast of the existing plant. Based on that input and staff's consideration of sites meeting screening criteria, staff selected six alternative sites that satisfied the preliminary site requirements within San Luis Obispo County or on/near existing transmission paths.

Staff found no alternative coastal site that could support a facility of this size. This is due to the lack of "Heavy Industry" zoning (which would be required for construction of a power plant) in coastal areas. Staff was therefore required to search for inland site alternatives for this project. The use of an inland site would require a change in the cooling system from once-through ocean water cooling to an air-cooled condenser or to cooling tower technologies. This would entail a significant change in

facility design, but is contemplated here in order to conduct a thorough analysis of site alternatives.

Water Availability. The main constraint to power plant siting for alternatives to the MBPP is availability of cooling water. As described below, several alternative sites located in the Central Valley are evaluated; these sites have good access to transmission and have been identified as potential power plant sites in the CEC's ongoing effort to identify sites that could be used to add generation capacity for the State. A variety of potential sources of cooling water for power generation is available; however, the State Water Resources Control Board Policy 75-98 has established the following priority system for use of water for power plant cooling:

- Wastewater being discharged to the ocean
- Ocean water
- Brackish water from natural sources or irrigation return flow
- Inland waste waters of low total dissolved solids
- Other inland waters.

The first source (wastewater discharge to ocean) is not available in the project area in sufficient quantities and the other alternative sites considered are not coastal. The second source, ocean water, is infeasible for all alternative sites except Diablo Canyon, given their distance from the ocean. Both the City of Morro Bay and the Central Valley in general are in very constrained water supply situations. As a result, the remaining sites identified below have very limited access to groundwater. Irrigation return flow is not available, according to water district staff, and there are no significant quantities of available wastewater (i.e., reclaimed water) near these sites. Therefore, two options are available for water supply for the alternative sites: (1) use of potable water from public providers (e.g., the State Water Project via the California Aqueduct), or (2) use of dry cooling technology that minimizes water needs.

Water supplies in the Central Valley are extremely limited, so additional withdrawal of large quantities of groundwater is not an option. The major source of water in the Valley is the California Aqueduct, but the Aqueduct carries water to various entities (including San Luis Obispo County/Morro Bay) under contract. Therefore, in order to use water from the Aqueduct, two conditions must be met: (1) the user must contract for (purchase) water from sources with an excess of water, and (2) adequate capacity must be available in the Aqueduct to transport the water. The user must pay the transport costs (pumping) for water shipped via the Aqueduct. Water purchased to be shipped via the Aqueduct must be of drinking water quality.

The Aqueduct is controlled by the California Department of Water Resources and the U.S. Bureau of Reclamation (USBOR). The area around the alternatives sites considered below is in USBOR jurisdiction (USBOR, 2001). Aqueduct water is committed to certain contractors, who may have excess water available to sell to a power plant developer. Water rights would have to be researched to guarantee that adequate water supplies could be developed for wet cooling needs. As an

example, the Hanford Energy Project (a 99 MW power plant requiring about 750,000 gallons per day) was recently approved by the CEC. In order to meet these water needs (which are significantly smaller than those that would be required for a 1200 MW plant), the Hanford applicant entered into water contracts with six separate water agencies/jurisdictions.

As a result of the questionable sources of water available in the Central Valley, this analysis assumes that dry cooling may be required for these sites. The following sections briefly explain cooling technologies (see also the **Soil and Water Resources** section of this Staff Assessment).

Cooling Technologies. Cooling water requirements using a wet cooling tower system ranges from about 3 to 6 million gallons of water per day when reclaimed water is used in a 600 MW facility (Metcalf AFC). In the MBPP AFC, the applicant proposes to use a once-through cooling system using seawater, with an average use of 475.2 million gallons of water per day or 330,000 gallons per minute. **Table ALTERNATIVES 2** summarizes water use and available cooling technologies.

Table ALTERNATIVES-2
Comparison of Cooling Technologies

Technology	Examples of Use	Water Requirements
Once through cooling using seawater	• Morro Bay Power Plant • Moss Landing Power Plant	475 million gpd
Wet cooling tower system (using reclaimed or fresh water)	• Metcalf Energy Center (proposed) • Pastoria Energy Facility (approved in 2001)	3 to 6 million gpd
Dry cooling	• Sutter Power Plant (under construction)	200,000 gpd

Dry cooling is a process by which cooling is accomplished by a large radiator that uses fans to move air across the coolers. This process requires only about 200,000 gallons of water per day (CEC, Sutter Power Plant Project Description from website). However, there are several concerns related to dry cooling technology:

- It is more expensive to construct because of the greater capital costs of the equipment
- It is more expensive to operate because of the electricity needed to power cooling fans
- Because air is used instead of water for cooling, the turbines operate less efficiently and less power is produced
- Power plants with dry cooling are noisier than water cooled plants
- The visual impacts of dry cooling plants are greater than those with water cooling because the cooling towers are much larger.

Despite the concerns related to dry cooling, this is an accepted technology and therefore, inadequate water supply is not considered to be a reason in itself to rule out a power plant site alternative.

ALTERNATIVE SITES

The six alternative sites are considered herein are listed below, and their locations are illustrated on ALTERNATIVES Figure 1 and Figure 2:

- Tank Farm Alternative (San Luis Obispo County, 3 miles northeast of Morro Bay)
- Morro Creek Alternative (San Luis Obispo County, 1 mile northeast of the existing plant)
- Gates Substation Alternative (Fresno County, 13 miles east of Coalinga)
- Lemoore Naval Air Station (Kings and Fresno Counties)
- Pleasant Valley State Prison (Coalinga, Fresno County)
- Avenal State Prison (Avenal, Fresno County)

TANK FARM ALTERNATIVE

Project and Site Description

The applicant owns an existing tank farm approximately 3 miles northeast of downtown Morro Bay, which occupies a portion of the 62 acres owned by Duke. The tank farm has historically been used for storage of water for fire fighting and fuel oil, which was originally pumped to this location from offshore tankers via a pipeline to Estero Bay. There are two existing 500,000-barrel fuel oil tanks. The site is within the jurisdiction of San Luis Obispo County. The site is at an elevation of approximately 660 feet, and is accessible by a paved access road from Highway 41. The elevation rise along the 1.2-mile access road is from about 200 feet (at Highway 41) to about 660 feet at the tank farm site.

The surrounding land uses are agricultural and industrial (the existing tank farm is surrounded by avocado orchards). The natural gas supply pipeline line is immediately adjacent to the tank farm site so only an interconnection system would be required. The transmission system interconnection line would be approximately 3 miles long (to the MBPP Switchyard). The route is assumed to follow the existing natural gas pipeline that runs between the tank farm and the existing MBPP site.

ALTERNATIVES Figure 1
Morro Creek and Tank Farm Alternative Sites

ALTERNATIVES Figure 2
Gates Substation, Lemoore AFB, Avenal, and Pleasant Valley Alternative Sites

Water for cooling at the Tank Farm site would have to be provided either by the City of Morro Bay or from the ocean. With the 660-foot elevation difference between the tank farm and the ocean, seawater is not considered a feasible source of water. The City of Morro Bay receives most of its water from the State Water Project pipeline. The City also has wells (on property leased from Duke) that provided city water prior to the completion of the SWP. These wells are currently in jeopardy of contamination from a subsurface plume from a gas station underground tank leak. The City's desalination plant has a capacity of 576,000 gpd (potentially expandable to 1,200,000 gpd), but it is not currently operational and its reliability is questionable (Duke, 2000a). Given that the city has no excess water available, dry cooling is the only option for the Tank Farm site. The potential impacts of that form of cooling are addressed above.

Advantages

- This site is zoned for agriculture and is currently used for industrial purposes.
- The applicant has site control.
- The site is currently disturbed: it is graded and paved in some areas, so there would be minimal new disturbance to biological resources.
- The site is located only one mile off of Highway 41. The turnoff to the tank farm is 2.1 miles east of Highway 1 and about 13.5 miles west of Highway 101. The proximity to these highways would facilitate material transport for deliveries and operations.
- Natural gas pipelines are located immediately adjacent to the site.
- Use of this site would eliminate potentially significant impacts to the marine environment.
- Operational impacts of the existing MBPP would be reduced or eliminated.

Disadvantages

- Access to the site is via a single lane paved roadway (1.2 miles northwest of Highway 41) designed for light traffic and not heavy construction vehicle traffic. The road would require significant improvement, affecting adjacent avocado orchards.
- There are wetlands areas within the tank farm property (resulting from the creation of a bermed area intended to protect downslope areas from a tank rupture or leak) that would be disturbed or eliminated by construction of a new plant at this site.
- Use of reclaimed water is not feasible. Limited amounts of water could be provided by the City of Morro Bay where the existing water system in Morro Bay is already severely challenged.
- A 3-mile transmission line would have to be built to connect with the MBPP Switchyard. This line would be highly visible as it followed the existing gas pipeline along the ridgelines toward the west and south.

- Construction in this hilltop location would require implementation of comprehensive measures to prevent erosion and sedimentation into Morro Creek, which runs parallel to Highway 41.
- Visual impacts of this site on the ridge above the City of Morro Bay would likely be significant. Visual screening would be difficult in this location due to the hilltop setting, especially with use of dry cooling technology. (On the other hand, this alternative could result in the elimination of the existing plant in central Morro Bay.).
- Construction ridgetop location has potential for disturbance of cultural resources (although site is disturbed due to presence of existing infrastructure).

MORRO CREEK SITE

Members of the public stated that the applicant could achieve project objectives with an electric generation facility located just east of but physically adjacent to the City of Morro Bay near existing transmission lines but further from the coast. One such potential site is located along the north side of Little Morro Creek Road approximately one mile east of the existing plant. This area is within unincorporated San Luis Obispo County in an area that is currently agricultural with low density residential usage.

The existing natural gas pipeline to the MBPP passes immediately west of this site, and the 230 kV transmission line to the Gates Substation is within a few hundred feet to the south. As for the Tank Farm site (above), water supply would be limited. Water would need to be pumped from the ocean (over one mile away), or dry cooling could be used.

Advantages

- The site can easily be connected to the PG&E substation and is adjacent to the existing gas line.
- The site has an accessible road system.
- Views of the site from the coast and from central Morro Bay would be limited.
- Use of this site would eliminate potentially significant impacts to the marine environment if dry cooling were used.
- Operational impacts of the existing MBPP at its current site would be reduced or eliminated (but these noise and air quality impacts would be shifted just one mile to the east).

Disadvantages

- Owner does not have site control
- Land for the first site is not zoned heavy industrial but rather agriculture and vineyard and is currently used for agriculture. This site would require a rezoning decision by the County of San Luis Obispo.

- The site is over one mile from the coast and therefore has limited access to cooling water
- The site would be less visible from central Morro Bay and from offshore due to its location north and east of a ridge with over 200 feet of elevation. However, additional visual impacts may be significant at this alternative site.
- There is the potential for flooding and liquefiable soils due to the site's location within the floodplain of Morro Creek.
- The floodplain location near the coast has the potential for cultural resources that could be destroyed or disturbed during construction.
- Surveys and mitigation would likely be required for biological resources.

GATES SUBSTATION ALTERNATIVE

Project and Site Description

The PG&E-owned Gates Substation is a major transmission substation providing 500/230/70 kV service on the backbone of the 500 kV system. The site is located in Fresno County, about 65 miles northeast of the existing MBPP, at 18336 West Jayne Avenue, 1.7 miles east of Interstate 5, 5 miles southwest of the community of Huron and 13 miles east of Coalinga. The substation was constructed in the early 1970's.

Staff considered a location adjacent to PG&E's Gates Substation as an alternative power plant site for Morro Bay site because it is this substation that receives the bulk of the power generated by the MBPP and transmits it to the regional transmission system. The site would be located immediately northeast (to the east of the 500 kV switchyard) or southwest (south of the 500 kV switchyard) from the portions of the Gates Substation used by PG&E. The existing Gates Substation owned by PG&E incorporates adequate land that could be available for power plant development, but even if PG&E had other plans for this land, adjacent land is agricultural and so could be converted to use for a power plant.

According to a Site Evaluation completed for the CEC's Peaking Plant Project (CEC, 2001a), a power plant in this location would be served by the northwest/southeast trending PG&E main gas pipelines, 300A and 300B which cross the property approximately 3600 and 1100 feet south and west of the substation, respectively. The transmission system interconnection line would be available immediately adjacent to the power plant at the Gates Substation.

It should be noted that the Gates Substation is the southern end of the 90-mile segment of Path 15 (between Los Banos and Gates) where there is an existing transmission constriction, especially with respect to power flowing from south to north. However, because MBPP power would feed to the Gates Substation in all circumstances considered in this analysis, the transmission constriction would be the same in all alternatives.

Required infrastructure for this site would be provided as follows:

- Substation water is supplied from an onsite well that is sufficient only for current station domestic uses. Groundwater is located at a depth of about 200 feet, and adjacent land uses are primarily irrigated farmland. As discussed above, groundwater sources have not been identified in quantities needed for once-through cooling, but could support a dry cooling plant. The California Aqueduct is located 4 miles east of the substation site.
- Major transmission lines (230 kV and 500 kV) are located onsite.
- Natural gas pipelines are available within one mile of the substation.

The Gates Substation is surrounded by agricultural land uses with annual crops, orchards, and vineyards. No residences or other buildings are visible from the substation. No wetlands or vernal pools were observed in the vicinity of the substation. This area is potential habitat for kit fox, kangaroo rat, and horned toads (species of concern in the area).

Advantages

- The surrounding area is agricultural so there are few sensitive receptors for air quality, noise, and visual impacts.
- Existing industrial-type uses (major substation and transmission lines) reduce visual resource impacts that would otherwise exist at this site
- The site is just off Interstate 5, thus facilitating material transport for deliveries and operations.
- Use of this site would eliminate potentially significant impacts to the marine environment.
- Operational impacts of the existing MBPP would be reduced or eliminated.

Disadvantages

- Reclaimed water is not available, and groundwater supplies are limited in the Central Valley. For wet cooling, water could probably be provided via the California Aqueduct based on purchase agreements made by Duke and Duke would also have to pay the transportation (pump) costs to get water to this site. Local water supplies are severely limited in this heavily agricultural area.
- Transmission line losses would result from transmission of local power back to the MBPP Substation (for service to the City of Morro Bay and surrounding areas). However, these losses would be less than those required to transmit the bulk of MBPP power from MBPP to Gates (as is the case under the existing or proposed projects).
- Surveys and mitigation would likely be required for biological resources.
- The site is not within the applicant's control.

LEMOORE NAVAL AIR STATION

The Lemoore Naval Air Station began operation in 1961 and is located about 95 miles north-northeast of Morro Bay. It includes about 18,000 acres, 4,000 of which are utilized for base operations (CEC, 2001b). The base is approximately 10 miles by 5 miles (east-west). The remaining base acreage is leased for agriculture. PG&E's 230 kV Henrietta Substation is located about 1 mile south of the base and is connected with the Gates Substation (which is approximately 15 miles to the southwest) by existing 230 kV transmission lines. The base is primarily within Kings County, with a portion in Fresno County.

Base personnel identified two potential sites on the base, including a 20-acre site northwest of the main gate that has been reserved for potential future development of a golf course, and a former landfill that has been fully restored and covered and is being monitored for methane gas production. Because of the noise caused by naval flight training (40-50 take-offs and landings per day), use of base land has been restricted and a large agricultural area has been retained to prevent residential encroachment to the airfields. Non-military land uses within the Base are open fields and agricultural areas (cotton fields and pistachio groves).

A housing development within the base is located one mile east of the main gate. State Highway 198 passes across the southern boundary of the base and leads to Highway 99 (about 30 miles to the east) and Interstate 5 (about 15 miles to the west).

Required infrastructure for this site is as follows:

- Water service to the base is from the Westlands Water District (through the nearby California Aqueduct), which primarily serves agricultural users and is in short supply. The Base's existing supply of drinking and irrigation water is extremely limited. Water disposal is currently through an on-site treatment plant and evaporator ponds. Treated water from the evaporator ponds could be available for power plant cooling, but volume would be insufficient for anything but dry cooling. The City of Lemoore has no fresh water available, and all current supplies of recycled wastewater are under contract for agricultural use (City of Lemoore, 2001).
- Transmission lines of 230 kV are located 0.5 miles south of the identified sites.
- Natural gas is supplied to the base via a 6-inch high-pressure gas line, which is stepped down for distribution within the base. The 6-inch line is approximately 0.3 miles north of the base.

Advantages

- Use of this site would eliminate potentially significant impacts to the marine environment.
- Operational impacts of the existing MBPP would be reduced or eliminated.

- No significant visual or land use impacts: nearest receptors are about 5 miles away
- Access to transmission grid
- Previously-disturbed landfill site is unlikely to contain cultural resources
- Transmission lines exist to serve local power demand in Morro Bay area (via Henrietta and Gates Substations, both of which have 230 kV circuits)
- Noise in the area is dominated by flight operations, and there are no sensitive land uses near the identified sites.
- Excellent access along Highway 198 from east or west; low traffic volumes.

Disadvantages

- Adequate water supply may be difficult to obtain
- Fresno Kangaroo rat may be present in the area; surveys and mitigation would likely be required for biological resources.
- Greater distance to serve local power needs (nearly 100 miles)
- Facility height may be restricted by naval flight requirements.
- The site is not within the applicant's control.
- Pleasant Valley State Prison
- Project and Site Description
- The Pleasant Valley State Prison is located east of the City of Coalinga on Jayne Avenue (in Fresno County), about 60 miles north-northeast of Morro Bay. The prison site is 640 acres in total. It opened in 1994 and houses about 5,000 prisoners. Prior to its use as a prison, the site was in agricultural use (CEC, 2000c).
- There are no nearby residences (aside from the prison inmates), and agricultural land uses surround the site. Jayne Avenue has access to Interstate 5, approximately 7 miles to the east. State Highways 33 and 198 also pass through Coalinga, giving it good transportation access. Oil fields surround the town and oil infrastructure (pipelines, wells, tanks) is visible. The 500/230 kV Gates Substation is located 10 miles east of this site, and a transmission interconnection would be required.
- Required infrastructure for this site is as follows:
- Natural gas is available off Line #105 from 4th Street, where additional gas pressure could be provided. Quantity of gas available is uncertain.
- Transmission access is about 10 miles to the east at the Gates Substation, so a 10-mile 230 kV transmission line would need to be constructed.
- Adequate water for once-through cooling may not be available (see discussion above), but dry cooling could be implemented. The City of Coalinga obtains drinking water from the California Aqueduct under contract with the USBOR.

Additional water supplies are dependent on weather and availability; long-term contracts may not be available.

Advantages

- Use of this site would eliminate potentially significant impacts to the marine environment.
- Operational impacts of the existing MBPP would be reduced or eliminated.

Disadvantages

- The site is within a few miles of the City of Coalinga and would be visible from the city as it is slightly downhill from the city.
- Noise may disturb prison occupants.
- Source of water is not defined.
- While there is a gas pipeline in Coalinga, the adequacy of the natural gas supply has not been confirmed.
- Surveys and mitigation would likely be required for biological resources.
- The site is not within the applicant's control.

AVENAL STATE PRISON

The Avenal State Prison is located in Kings County on a 640 acres parcel on Highway 33 (about 3 miles south of the City of Avenal). The prison was opened in 1987 after being solicited by the local community. It is surrounded by gentle rolling hills and is at about 750 feet of elevation. Agricultural land uses surround the site. The site is located about 10 miles south of the Gates Substation and 60 miles northeast of Morro Bay. There are no nearby residences (aside from prison occupants). There is a 66 kV substation, shooting range, and sewer treatment plant nearby.

Two possible sites are considered: one near the natural gas connection north of the prison site (further from the highway but also further away from transmission), and one near the substation (but further from the natural gas line).

Required infrastructure for this site is as follows:

- The existing 230 kV transmission line between Morro Bay and the Gates Substation is less than 5 miles to the northwest of this site, so an interconnection would be required. A 66 kV substation is located across the street from the prison; 66 kV lines from this substation go to north to the Kettleman Hills Substation and then to the Gates Substation, so a parallel route for a new 230 kV line could be constructed adjacent to existing lines. The Gates Substation is less than 10 miles to the north.
- Potable water is available from the City of Avenal (via City of Coalinga which provides water to Avenal), but adequate supplies for once-through cooling are unlikely.

- There is an 18-inch natural gas pipeline (from Line 105) at the site.

Advantages

- Easy access from Highway 33 for construction and maintenance
- Adjacent to another major industrial facility (State Prison) so some benefits of co-location of industrial land uses and their associated impacts would result.
- Use of this site would eliminate potentially significant impacts to the marine environment.
- Operational impacts of the existing MBPP would be reduced or eliminated.

Disadvantages

- Transmission access at a distance (5 miles away) so a new 230 kV transmission line would need to be constructed.
- A power plant in this location would be highly visible from Highway 33, despite the adjacent prison.
- Surveys and mitigation would likely be required for biological resources.
- The site is not within the applicant's control.

ALTERNATIVE SITES ELIMINATED

SITES TO THE NORTH

Intervenors suggested consideration of alternative sites to the north (e.g., expansion of Duke's Moss Landing plant) because these sites would not require use of the constricted portion of the transmission segment known as "Path 15." These northern sites are not considered herein because:

- There is a current application before the California Public Utilities Commission for expansion of the portion of Path 15 between PG&E's Gates and Los Banos Substations. This proposal calls for construction of a 90-mile 500 kV transmission line by mid-2004. Given that the on-line date for the MBPP modernization (or for any other new plant that would be approved in 2001) is 200x, this transmission constriction is not expected to be relevant.
- The MBPP currently provides 30 to 40 percent of its power to the coastal San Luis Obispo County area (including the City of Morro Bay). Therefore, site alternatives were limited to areas near the existing 230 kV transmission lines into the Morro Bay Substation because the Moss Landing site could not provide this local power.

CALIFORNIA MEN'S COLONY

This prison facility opened in 1954 and is located along Highway 1 just west of San Luis Obispo. There is a 115 kV substation on the prison grounds. The plant is immediately east of and adjacent to Chorro Creek, which has a high level of biological sensitivity (CEC, 2001d). There are residences in close proximity to the

prison facility and substation site, so noise and visibility would be significant concerns. The site is constrained with hills around it, and would be highly visible from Highway 1, a scenic highway, and about 3 miles northwest of the City of San Luis Obispo. The site was eliminated from further consideration because it offers no significant advantages over the proposed site.

DIABLO CANYON ALTERNATIVE

The Diablo Canyon Nuclear Plant is located about 10 miles south of the City of Morro Bay and about 7 miles west of Highway 101. There are 750 acres within the Plant property, including a large amount of coastline. This large amount of land was set aside to protect the plant from adjacent development, unauthorized intrusion, and to mitigate environmental impacts by creating an undeveloped buffer around the Plant.

The nearest natural gas supply interconnection line is approximately 6 miles east of the plant, so a new gas line would need to be installed over that distance. The transmission system interconnection currently exists, since Diablo Canyon generates power that supplies the whole State of California. There are 5 existing transmission circuits at the plant site: three 500 kV lines (one to Gates Substation and two to Midway Substation near Buttonwillow) and two 230 kV lines that both connect to the Morro Bay switchyard. The lines originate at a switchyard located adjacent to the nuclear facility. Water at this site could be provided by seawater, if an adequate coastal site could be identified.

While this site offers the potential to remove the existing MBPP from the center of the City of Morro Bay, its use would result in the relocation of marine biological impacts and visual impacts to another scenic area of the coast. In addition, the availability of this land for use as a thermal power plant is questionable since the nuclear power plant requires a high level of security and isolation.

CONCLUSIONS REGARDING ALTERNATIVE SITES

This screening level analysis has not resulted in the identification of “fatal flaws” for any of the six alternative sites. However, more detailed analysis of conditions and resources at each site might result in identification of potential impacts beyond those listed above. In comparison to the potential significant impacts of the proposed project:

- Each of the six sites has the potential to eliminate impacts to the marine environment (though it is noted that use of dry cooling at the proposed project site would also reduce or eliminate most impacts to the marine environment, even if units 3 and 4 were to remain operational).
- Five of the six alternative sites would have less visual impact than the proposed project. The visual impacts of the Tank Farm alternative site could be significant, similar to the impacts of the proposed project.
- Water supply could be a significant impact at all six sites, as it may be with respect to groundwater pumping and use of seawater in Morro Bay for the proposed project.

- The potential for impacts to cultural resources has not been specifically evaluated at each site. Construction at any of the four locations outside of San Luis Obispo County would be on flat land, not affecting any topographic features (such as Morro Rock) that may have cultural significance.

Alternatives Table 3 summarizes the major issues and concerns regarding the six alternative sites. Where infrastructure connections (e.g., new gas pipelines or transmission lines) are required to be constructed, these impacts are also considered.

ALTERNATIVES Table 3
Comparison of Alternative Sites

Alternative Site	Major Issues, Concerns, or Benefits	Potentially Significant Impacts of Proposed Project				Preliminary Comparison to Proposed MBPP
		Biological Resources	Cultural Resources	Visual Resources	Soil / Water	
Tank Farm Alternative	• Plant and transmission lines would be highly visible from City of Morro Bay • Greater construction impacts for plant, transmission line, and water supply	Disturbed site; no marine impacts. Better than proposed.	Disturbed site with ridgetop location; similar to proposed.	Ridgetop location above Morro Bay; similar to proposed.	Water supply concern; greater construction impacts.	Potentially Worse
Morro Creek Alternative	• Operational impacts would be relocated only one mile from existing site • Site is less visible from central Morro Bay	Agricultural site; no marine impacts. Better than proposed.	Unknown, but potential for impacts along Morro Creek.	Less visible than proposed site, but still potentially significant	Water supply concern.	Uncertain
Gates Substation Alternative	• Gas, transmission, and land is available • Minimal visual impacts (isolated location)	Agricultural site adjacent to substation. Better than proposed.	Unknown, but agricultural site adjacent to substation appears better than proposed.	No sensitive viewers; better than proposed.	Water supply concern.	Potentially Better
Lemoore Naval Air Station	• Gas, transmission, and land is available • Minimal visual impacts (isolated location)	Unknown, but as existing military base, likely better than proposed.	Unknown, but as existing military base, likely better than proposed.	No sensitive viewers; better than proposed	Water supply concern.	Potentially Better
Pleasant Valley State Prison	• 10-mile transmission connection required • Visual impacts from City of Coalinga	Potential biological impacts along transmission line; likely better than proposed	Unknown.	Potential sensitive views; still better than proposed	Water supply concern.	Uncertain
Avenal State Prison	• 5 to 10 mile transmission connection required • Visual impacts from Highway 33	Potential biological impacts along transmission line; likely better than proposed	Unknown.	Potential sensitive views; still better than proposed	Water supply concern.	Uncertain

CONCLUSION

Staff does not believe that energy efficiency measures and alternative technologies (geothermal, solar, wind, and hydroelectric) present any feasible alternatives to the proposed project.

The No Project Alternative, while it would result in the reduction of construction impacts and some air pollutants, would also not allow the proposed modernization to occur. Modernization would reduce visual and noise impacts of the existing plant by removal of the existing stacks and generation building, and would also contribute to meeting the State's growing needs from electrical power. While the existing operational impacts such as air emissions and water quality effects would continue, these effects would be reduced due to the reduced capacity of the plant over time.

The option of constructing a smaller project, such as a 240 MW combined cycle unit would still have traffic, biological resources and water resource impacts (depending on its location) similar to those of the proposed project. In addition, the reduction in power generated would exacerbate the State's current electricity shortages. Therefore, the smaller option is not better than the proposed project.

The proposed MBPP would make use of many existing infrastructure systems: water intake and discharge, transmission interconnection, natural gas supplies, and other existing mechanical systems. Construction of the proposed project within the existing MBPP also avoids new environmental impacts that would be associated with development at another site.

This section presented an analysis of six alternative sites. CEQA requires that an alternatives analysis focus on elimination of the project's potential significant impacts to less than significant levels. In the MBPP these potential significant adverse impacts may occur in biological resources, soils and water resources, visual resources, and cultural resources. However, staff believes that additional information is likely to indicate that mitigation measures will be able to reduce many of these effects to less than significant levels. Two alternative sites appear to have the potential to eliminate most significant impacts preliminary identified for the proposed project without creating greater impacts in their new locations. Staff is not yet able to identify which of the alternatives is "environmentally superior" (Cal. Code Regs., tit.14, S.15126.6 (e)(2)).

REFERENCES

CEC (California Energy Commission). 2000a. Identification Report, February 2001.

CEC (California Energy Commission). 2001a. Peaking Unit Site Investigation for the California Energy Commission: Site #46, PG&E Gates Substation.

CEC (California Energy Commission). 2001b. Peaking Unit Site Investigation for the California Energy Commission: Lemoore Naval Air Station.

CEC (California Energy Commission). 2001c. Peaking Unit Site Investigation for the California Energy Commission: Site #48, Pleasant Valley State Prison.

CEC (California Energy Commission). 2001d. Peaking Unit Site Investigation for the California Energy Commission: Site #55, California Men's Colony.

City of Lemoore. 2001. Personal conversation of Richard Perrera, Lemoore Water Department, with Rebecca Morgenstern of Aspen Environmental Group. May 2, 2001.

DUKE (Duke Energy Morro Bay LLC). 2001. Robert Cochran, Duke Energy Representative, personal conversation with Susan Lee of Aspen Environmental Group. February 21.

DUKE (Duke Energy Morro Bay LLC) 2000a. Application for Certification, Volumes 1a-1b, II-IV, Morro Bay Power Plant Project (00-AFC-12). Submitted to the California Energy Commission on October 23, 2000.

DUKE (Duke Energy Morro Bay LLC). 2001a. Response to Data Requests; Data Request Letters 216 and 23. April 11, 2001.

DUKE (Duke Energy Morro Bay LLC) 2000j. Data Adequacy Responses to the CEC Comments on the Morro Bay Power Plant AFC, dated and submitted to the California Energy Commission on December 8, 2000.

DUKE (Duke Energy Morro Bay LLC) 2001b. Responses to CEC 2/9/01 Data Requests (Second set of responses to CEC data request Set 1), dated and submitted to California Energy Commission on April 11, 2001.

DUKE (Duke Energy Morro Bay LLC) 2001e. Responses to CEC 4/2/01 Data Requests (First set of responses to CEC data request Set 2 and continuation of responses to Set 1), dated April 24, 2001. Submitted to California Energy Commission on April 26, 2001.

Duke Energy. 2001b. Response to Data Requests; Data Request Letter 187. April 24, 2001.

LNAS (Lamoore Naval Air Station). 2001. Personal communication, Jim Williams, Maintenance and Utilities Director of Lemoore NAS with Rebecca Morgenstern, Aspen Environmental Group. May 2.

USBOR (U.S. Bureau of Reclamation). 2001. Personal communication, Jon Anderson, water rights specialist, with Rebecca Morgenstern, Aspen Environmental Group. April 30.

GENERAL CONDITIONS
INCLUDING
COMPLIANCE MONITORING AND CLOSURE PLAN

Connie Bruins

INTRODUCTION

The project General Conditions Including Compliance Monitoring and Closure Plan (Compliance Plan) have been established as required by Public Resources Code section 25532. The plan provides a means for assuring that the facility is constructed, operated and closed in conjunction with air and water quality, public health and safety, environmental and other applicable regulations, guidelines, and conditions adopted or established by the California Energy Commission (Energy Commission) and specified in the written decision on the Application for Certification or otherwise required by law.

The Compliance Plan is composed of the following elements:

1. General conditions that:
   a) set forth the duties and responsibilities of the Compliance Project Manager (CPM), the project owner, delegate agencies, and others;
   b) set forth the requirements for handling confidential records and maintaining the compliance record;
   c) state procedures for settling disputes and making post-certification changes;
   d) state the requirements for periodic compliance reports and other administrative procedures that are necessary to verify the compliance status for all Energy Commission approved conditions; and
   e) establish requirements for facility closure plans.

2. Specific conditions of certification:

   Specific conditions of certification that follow each technical area contain the measures required to mitigate any and all potential adverse project impacts associated with construction, operation and closure to an insignificant level. Each specific condition of certification also includes a verification provision that describes the method of verifying that the condition has been satisfied.

GENERAL CONDITIONS OF CERTIFICATION

DEFINITIONS

To ensure consistency, continuity and efficiency, the following terms, as defined, apply to all technical areas, including Conditions of Certification:

SITE MOBILIZATION:

Moving trailers and related equipment onto the site, usually accompanied by minor ground disturbance, grading for the trailers and limited vehicle parking, trenching for utilities, installing utilities, grading for an access corridor, and other related activities. Ground disturbance, grading, etc. for site mobilization are limited to the portion of the site necessary for placing the trailers and providing access and parking for the occupants. Site mobilization is for temporary facilities and is therefore not considered construction.

GROUND DISTURBANCE:

Onsite activity that results in the removal of soil or vegetation, boring, trenching or alteration of the site surface. This does not include driving or parking a passenger vehicle, pickup truck, or other light vehicle, or walking on the site.

GRADING:

Onsite activity conducted with earth-moving equipment that results in alteration of the topographical features of the site such as leveling, removal of hills or high spots, or moving of soil from one area to another.

CONSTRUCTION:

[From section 25105 of the Warren-Alquist Act.] Onsite work to install permanent equipment or structures for any facility. Construction does **not** include the following:

a. The installation of environmental monitoring equipment.
b. A soil or geological investigation.
c. A topographical survey.
d. Any other study or investigation to determine the environmental acceptability or feasibility of the use of the site for any particular facility.
e. Any work to provide access to the site for any of the purposes specified in a., b., c., or d.

START OF COMMERCIAL OPERATION

a. The project startup team has completed work.
b. The plant manager accepts control from the construction manager.
c. Expenses for the project are switched from construction to operation.
d. The facility has reached steady state with reliability at the rated capacity.
e. Financing accounting switches from construction (capital costs) to operations (Income-producing expenses) financing.

COMPLIANCE PROJECT MANAGER (CPM) RESPONSIBILITIES

A CPM will oversee the compliance monitoring and shall be responsible for:

1. ensuring that the design, construction, operation, and closure of the project facilities is in compliance with the terms and conditions of the Commission Decision;
2. resolving complaints;
3. processing post-certification changes to the conditions of certification, project description, and ownership or operational control;
4. documenting and tracking compliance filings; and,
5. ensuring that the compliance files are maintained and accessible.

The CPM is the contact person for the Energy Commission and will consult with appropriate responsible agencies and the Energy Commission when handling disputes, complaints and amendments.

All project compliance submittals are submitted to the CPM for processing. Where a submittal required by a condition of certification requires CPM approval, it should be understood that the approval would involve all appropriate staff and management.

The Commission has established a toll free compliance telephone number of **1-800-858-0784** for the public to contact the Commission about power plant construction or operation-related questions, complaints or concerns.

PRE-CONSTRUCTION AND PRE-OPERATION COMPLIANCE MEETING

The CPM may schedule pre-construction and pre-operation compliance meetings prior to the projected start-dates of construction, plant operation, or both. The purpose of these meetings will be to assemble both the Energy Commission's and the project owner's technical staff to review the status of all pre-construction or pre-operation requirements and milestones contained in the Energy Commission's conditions of certification to confirm that they have been met, or if they have not been met, to ensure that the proper action is taken. In addition, these meetings shall ensure, to the extent possible, that Energy Commission conditions will not delay the construction and operation of the plant due to oversight or inadvertence and to preclude any last minute, unforeseen issues from arising. Pre-construction meetings held during the certification process must be publicly noticed unless they are confined to administrative issues and processes.

ENERGY COMMISSION RECORD

The Energy Commission shall maintain as a public record, in either the Compliance file or Docket file, for the life of the project (or other period as required):

1. all documents demonstrating compliance with any legal requirements relating to the construction and operation of the facility;
2. all monthly and annual compliance reports filed by the project owner;
3. all complaints of noncompliance filed with the Energy Commission; and,
4. all petitions for project or condition changes and the resulting staff or Energy Commission action taken.

PROJECT OWNER RESPONSIBILITIES

It is the responsibility of the project owner to ensure that the general compliance conditions and the conditions of certification are satisfied. The general compliance conditions regarding post-certification changes specify measures that the project owner must take when requesting changes in the project design, compliance conditions, or ownership. Failure to comply with any of the conditions of certification or the general compliance conditions may result in reopening of the case and revocation of Energy Commission certification, an administrative fine, or other action as appropriate.

ACCESS

The CPM, responsible Energy Commission staff, and delegate agencies or consultants, shall be guaranteed and granted unrestricted access to the power plant site, related facilities, project-related staff, and the records maintained on site, for the purpose of conducting audits, surveys, inspections, or general site visits. Although the CPM will normally schedule site visits on dates and times agreeable to the project owner, the CPM reserves the right to make unannounced visits at any time.

COMPLIANCE RECORD

The project owner shall maintain project files on-site or at an alternative site approved by the CPM, for the life of the project. The files shall contain copies of all “as-built” drawings, all documents submitted as verification for conditions, and all other project-related documents for the life of the project, unless a lesser period is specified by the conditions of certification.

Energy Commission staff and delegate agencies shall, upon request to the project owner, be given unrestricted access to the files.

COMPLIANCE VERIFICATIONS

Each condition of certification is followed by a means of verification. The verification describes the Energy Commission’s procedure(s) to ensure post-certification compliance with adopted conditions. The verification procedures, unlike the

conditions, may be modified, as necessary by the CPM, and in most cases without full Energy Commission approval.

Verification of compliance with the conditions of certification can be accomplished by:

1. reporting on the work done and providing the pertinent documentation in monthly and/or annual compliance reports filed by the project owner or authorized agent as required by the specific conditions of certification;
2. appropriate letters from delegate agencies verifying compliance;
3. Energy Commission staff audits of project records; and/or
4. Energy Commission staff inspections of mitigation and/or other evidence of mitigation.

Verification lead times (e.g., 90, 60 and 30-days) associated with start of construction may require the project owner to file submittals during the certification process, particularly if construction is planned to commence shortly after certification.

A cover letter from the project owner or authorized agent is required for all compliance submittals and correspondence pertaining to compliance matters. **The cover letter subject line shall identify the involved condition(s) of certification by condition number and include a brief description of the subject of the submittal**. The project owner shall also identify those submittals **not** required by a condition of certification with a statement such as: “This submittal is for information only and is not required by a specific condition of certification.” When submitting supplementary or corrected information, the project owner shall reference the date of the previous submittal.

The project owner is responsible for the delivery and content of all verification submittals to the CPM, whether such condition was satisfied by work performed by the project owner or an agent of the project owner.

All submittals shall be addressed as follows:

Compliance Project Manager
California Energy Commission
1516 Ninth Street (MS-2000)
Sacramento, CA 95814

If the project owner desires Energy Commission staff action by a specific date, they shall so state in their submittal and include a detailed explanation of the effects on the project if this date is not met.

COMPLIANCE REPORTING

There are two different compliance reports that the project owner must submit to assist the CPM in tracking activities and monitoring compliance with the terms and conditions of the Commission Decision. During construction, the project owner or authorized agent will submit Monthly Compliance Reports. During operation, an Annual Compliance Report must be submitted. These reports, and the requirement for an accompanying compliance matrix, are described below. The majority of the conditions of certification require that compliance submittals be submitted to the CPM in the monthly or annual compliance reports.

COMPLIANCE MATRIX

A compliance matrix shall be submitted by the project owner to the CPM along with each monthly and annual compliance report. The compliance matrix is intended to provide the CPM with the current status of all compliance conditions in a spreadsheet format. The compliance matrix must identify:

1. the technical area,
2. the condition number,
3. a brief description of the verification action or submittal required by the condition,
4. the date the submittal is required (e.g., 60 days prior to construction, after final inspection, etc.),
5. the expected or actual submittal date,
6. the date a submittal or action was approved by the Chief Building Official (CBO), CPM, or delegate agency, if applicable,
7. the compliance status for each condition (e.g., “not started”, “in progress” or “completed date”), and
8. the project’s preconstruction and construction milestones, including dates and status.

Completed or satisfied conditions do not need to be included in the compliance matrix after they have been identified as completed/satisfied in at least one monthly or annual compliance report.

PRE-CONSTRUCTION MATRIX

Prior to commencing construction a compliance matrix addressing <u>only</u> those conditions that must be fulfilled before the start of construction shall be submitted by the project owner to the CPM. This matrix will be included with the project owner’s **first** compliance submittal. It will be in the same format as the compliance matrix referenced above.

TASKS PRIOR TO START OF CONSTRUCTION

Construction shall not commence until the pre-construction matrix is submitted, all pre-construction conditions have been complied with, and the CPM has issued a letter to the project owner authorizing construction. Project owners frequently anticipate starting project construction as soon as the project is certified. In some

cases it may be necessary for the project owner to file submittals prior to certification if the required lead-time for a required compliance event extends beyond the date anticipated for start of construction. It is also important that the project owner understand that pre-construction activities that are initiated prior to certification are performed at the owner's own risk. Failure to allow specified lead-time may cause delays in start of construction.

Various lead times for verification submittals to the CPM for conditions of certification are established to allow sufficient staff time to review and comment, and if necessary, allow the project owner to revise the submittal in a timely manner. This will ensure that project construction may proceed according to schedule.

MONTHLY COMPLIANCE REPORT

The first Monthly Compliance Report is due the month following the Energy Commission business meeting date on which the project was approved, unless otherwise agreed to by the CPM. The first Monthly Compliance Report shall include an initial list of dates for each of the events identified on the Key Events List. The Key Events List is found at the end of this section.

During pre-construction and construction of the project, the project owner or authorized agent shall submit an original and five copies of the Monthly Compliance Report within 10 working days after the end of each reporting month. Monthly Compliance Reports shall be clearly identified for the month being reported. The reports shall contain at a minimum:

1. a summary of the current project construction and milestones status, a revised/updated schedule if there are significant delays, and an explanation of any significant changes to the schedule;
2. documents required by specific conditions to be submitted along with the Monthly Compliance Report. Each of these items must be identified in the transmittal letter, and should be submitted as attachments to the Monthly Compliance Report;
3. an initial, and thereafter updated, compliance matrix which shows the status of all conditions of certification and preconstruction and construction milestones (fully satisfied and/or closed conditions do not need to be included in the matrix after they have been reported as closed);
4. a list of conditions and milestones that have been satisfied during the reporting period, and a description or reference to the actions which satisfied the condition;
5. a list of any submittal deadlines that were missed accompanied by an explanation and an estimate of when the information will be provided;
6. a cumulative listing of any approved changes to conditions of certification;
7. a listing of any filings with, or permits issued by, other governmental agencies during the month;

8. a projection of project compliance activities scheduled during the next two months. The project owner shall notify the CPM as soon as any changes are made to the project construction schedule that would affect compliance with conditions of certification or milestones;
9. a listing of the month's additions to the on-site compliance file; and
10. any requests to dispose of items that are required to be maintained in the project owner's compliance file.
11. a listing of complaints, notices of violation, official warnings, and citations received during the month; a description of the resolution of any complaints which have been resolved, and the status of any unresolved complaints.

ANNUAL COMPLIANCE REPORT

After the air district has issued a Permit to Operate, the project owner shall submit Annual Compliance Reports instead of Monthly Compliance Reports. The reports are for each year of commercial operation and are due to the CPM each year at a date agreed to by the CPM. Annual Compliance Reports shall be submitted over the life of the project unless otherwise specified by the CPM. Each Annual Compliance Report shall identify the reporting period and shall contain the following:

1. an updated compliance matrix which shows the status of all conditions of certification (fully satisfied and/or closed conditions do not need to be included in the matrix after they have been reported as closed);
2. a summary of the current project operating status and an explanation of any significant changes to facility operations during the year;
3. documents required by specific conditions to be submitted along with the Annual Compliance Report. Each of these items must be identified in the transmittal letter, and should be submitted as attachments to the Annual Compliance Report;
4. a cumulative listing of all post-certification changes approved by the Energy Commission or cleared by the CPM;
5. an explanation for any submittal deadlines that were missed, accompanied by an estimate of when the information will be provided;
6. a listing of filings made to, or permits issued by, other governmental agencies during the year;
7. a projection of project compliance activities scheduled during the next year;
8. a listing of the year's additions to the on-site compliance file, and
9. an evaluation of the on-site contingency plan for unexpected facility closure, including any suggestions necessary for bringing the plan up to date [see General Conditions for Facility Closure addressed later in this section].
10. a listing of complaints, notices of violation, official warnings, and citations received during the year; a description of the resolution of any complaints which have been resolved, and the status of any unresolved complaints.

CONFIDENTIAL INFORMATION

Any information, which the project owner deems confidential shall be submitted to the Energy Commission's Docket with an application for confidentiality pursuant to Title 20, California Code of Regulations, section 2505(a). Any information, which is determined to be confidential, shall be kept confidential as provided for in Title 20, California Code of Regulations, section 2501 et. seq.

DEPARTMENT OF FISH AND GAME FILING FEE

Pursuant to the provisions of Fish and Game Code Section 711.4, the project owner shall pay a filing fee in the amount of eight hundred and fifty dollars ($850). The payment instrument shall be provided to the Commission's Project Manager at the time of project certification and shall be made payable to the California Department of Fish and Game. The Commission's Project Manager will submit the payment to the Office of Planning and Research at the time of filing of the notice of decision pursuant to Public Resources Code Section 21080.5.

REPORTING OF COMPLAINTS, NOTICES, AND CITATIONS

Prior to the start of construction, the project owner must send a letter to property owners living within one mile of the project notifying them of a telephone number to contact project representatives with questions, complaints or concerns. If the telephone is not staffed 24 hours per day, it shall include automatic answering, with date and time stamp recording. The telephone number shall be posted at the project site and easily visible to passersby during construction and operation.

In addition to the monthly and annual compliance reporting requirements described above, the project owner shall report and provide copies of all complaint forms, notices of violation, notices of fines, official warnings, and citations, within 10 days of receipt, to the CPM. Complaints shall be logged and numbered. Noise complaints shall be recorded on the form provided in the **NOISE** conditions of certification. All other complaints shall be recorded on the complaint form on the following page.

COMPLAINT REPORT/RESOLUTION FORM

PROJECT NAME:
AFC Number:

COMPLAINT LOG NUMBER _____
Complainant's name and address:

Phone number:

Date and time complaint received:

Indicate if by telephone or in writing (attach copy if written):
Date of first occurrence:

Description of complaint (including dates, frequency, and duration):

Findings of investigation by plant personnel:

Indicate if complaint relates to violation of a CEC requirement:
Date complainant contacted to discuss findings:

Description of corrective measures taken or other complaint resolution:

Indicate if complainant agrees with proposed resolution:
If not, explain:

Other relevant information:

If corrective action necessary, date completed:
Date first letter sent to complainant: _____(copy attached)
Date final letter sent to complainant: _____(copy attached)

This information is certified to be correct.
Plant Manager's Signature: _____ Date:

(Attach additional pages and supporting documentation, as required.)

CONSTRUCTION MILESTONES

The following is the procedure for establishing and enforcing milestones, which include milestone dates for pre-construction and construction phases of the project.

Milestones, and method of verification must be established and agreed upon by the project owner and the CPM no later than 30 days after project approval, the date of docketing. If this deadline is not met, the CPM will establish the milestones.

I. ESTABLISH PRE-CONSTRUCTION MILESTONES TO ENABLE START OF CONSTRUCTION WITHIN ONE YEAR OF CERTIFICATION

1. Obtain site control.
2. Obtain financing.
3. Mobilize site.
4. Begin rough grading for permanent structures (start of construction).

II. ESTABLISH CONSTRUCTION MILESTONES FROM DATE OF START OF CONSTRUCTION

1. Begin pouring major foundation concrete.
2. Begin installation of major equipment.
3. Complete installation of major equipment.
4. Begin gas pipeline construction.
5. Complete gas pipeline interconnection.
6. Begin T-line construction.
7. Complete T-line interconnection.
8. Begin commercial operation.

The CPM will negotiate the above-cited pre-construction and construction milestones with the project owner based on an expected schedule of construction. The CPM may agree to modify the final milestones from those listed above at any time prior to or during construction if the project owner demonstrates good-cause for not meeting the originally-established milestones. Otherwise, failure to meet milestone dates without a finding of good cause is considered cause for possible forfeiture of certification or other penalties.

III. A finding that there is good cause for failure to meet milestones will be made if any of the following criteria are met:

1. The change in any milestone does not change the established commercial operation date milestone.
2. The milestone is changed due to circumstances beyond the project owner's control.
3. The milestone will be missed, but the project owner demonstrates a good-faith effort to meet the project milestone.
4. The milestone is missed due to unforeseen natural disasters or acts of God which prevent timely completion of the milestones.

If a milestone date cannot be met, the CPM will make a determination whether the project owner has demonstrated good cause for failure to meet the milestone. If the determination is that good cause exists, the CPM will negotiate revised milestones.

If the project owner fails to meet one or more of the established milestones, and the CPM determines that good cause does not exist, the CPM will make a recommendation to the Executive Director. Upon receiving such recommendation, the Executive Director will take one of the following actions.

1. Conclude that good cause exists and direct that revised milestones be established; or
2. Issue a reprimand, impose a fine, or take other appropriate remedial action and direct that revised milestones be established; or
3. Recommend, after consulting with the Energy Facility Siting and Environmental Committee, that the Commission issue a finding that the project owner has forfeited the project's certification.

The project owner has the right to appeal a finding of no good cause, or any recommended remedial action, to the Energy Facility Siting and Environmental Committee, and to the full Commission.

FACILITY CLOSURE

At some point in the future, the project will cease operation and close down. At that time, it will be necessary to ensure that the closure occurs in such a way that public health and safety and the environment are protected from adverse impacts. Although the project setting for this project does not appear, at this time, to present any special or unusual closure problems, it is impossible to foresee what the situation will be in 30 years or more when the project ceases operation. Therefore, provisions must be made which provide the flexibility to deal with the specific situation and project setting which that exist at the time of closure. LORS pertaining to facility closure are identified in the sections dealing with each technical area. Facility closure will be consistent with LORS in effect at the time of closure.

There are at least three circumstances in which a facility closure can take place, planned closure, unexpected temporary closure and unexpected permanent closure**.**

PLANNED CLOSURE

A planned closure occurs at the end of a project's life, when the facility is closed in an anticipated, orderly manner, at the end of its useful economic or mechanical life, or due to gradual obsolescence.

UNEXPECTED TEMPORARY CLOSURE

An unplanned unexpected temporary closure occurs when the facility is closed suddenly and/or unexpectedly, on a short-term basis, due to unforeseen circumstances such as a natural disaster, or an emergency.

UNEXPECTED PERMANENT CLOSURE

An unplanned unexpected permanent closure occurs if the project owner closes the facility suddenly and/or unexpectedly, on a permanent basis. This includes unexpected closure where the owner remains accountable for implementing the on-site contingency plan. It can also include unexpected closure where the project owner is unable to implement the contingency plan, and the project is essentially abandoned.

GENERAL CONDITIONS FOR FACILITY CLOSURE

PLANNED CLOSURE

In order to ensure that a planned facility closure does not create adverse impacts, a closure process that provides for careful consideration of available options and applicable laws, ordinances, regulations, standards, and local/regional plans in existence at the time of closure, will be undertaken. To ensure adequate review of a planned project closure, the project owner shall submit a proposed facility closure plan to the Energy Commission for review and approval at least twelve months prior to commencement of closure activities (or other period of time agreed to by the CPM). The project owner shall file 120 copies (or other number of copies agreed upon by the CPM) of a proposed facility closure plan with the Energy Commission. The plan shall:

1. identify and discuss any impacts and mitigation to address significant adverse impacts associated with proposed closure activities and to address facilities, equipment, or other project related remnants that will remain at the site.
2. identify a schedule of activities for closure of the power plant site, transmission line corridor, and all other appurtenant facilities constructed as part of the project;
3. identify any facilities or equipment intended to remain on site after closure, the reason, and any future use; and
4. address conformance of the plan with all applicable laws, ordinances, regulations, standards, local/regional plans in existence at the time of facility closure, and applicable conditions of certification.

Also, in the event that there are significant issues associated with the proposed facility closure plan's approval, or the desires of local officials or interested parties are inconsistent with the plan, the CPM shall hold one or more workshops and/or the Commission may hold public hearings as part of its approval procedure.

In addition, prior to submittal of the proposed facility closure plan, a meeting shall be held between the project owner and the Commission CPM for the purpose of discussing the specific contents of the plan.

As necessary, prior to, or during the closure plan process, the project owner shall take appropriate steps to eliminate any immediate threats to public health and

safety and the environment, but shall not commence any other closure activities, until Commission approval of the facility closure plan is obtained.

UNEXPECTED TEMPORARY CLOSURE

In order to ensure that public health and safety and the environment are protected in the event of an unexpected temporary facility closure, it is essential to have an on-site contingency plan in place. The on-site contingency plan will help to ensure that all necessary steps to mitigate public health and safety, and environmental impacts, are taken in a timely manner.

The project owner shall submit an on-site contingency plan for CPM review and approval. The plan shall be submitted no less that 60 days (or other time agreed to by the CPM) prior to commencement of commercial operation. The approved plan must be in place prior to commercial operation of the facility and shall be kept at the site at all times.

The project owner, in consultation with the CPM, will update the on-site contingency plan as necessary. The CPM may require revisions to the on-site contingency plan over the life of the project. In the annual compliance reports submitted to the Energy Commission, the project owner will review the on-site contingency plan, and recommend changes to bring the plan up to date. Any changes to the plan must be approved by the CPM.

The on-site contingency plan shall provide for taking immediate steps to secure the facility from trespassing or encroachment. In addition, for closures of more than 90 days (unless other arrangements are agreed to by the CPM), the plan shall provide for removal of hazardous materials and hazardous wastes, draining of all chemicals from storage tanks and other equipment and the safe shutdown of all equipment (also see specific conditions of certification for the technical areas of Hazardous Materials Management and Waste Management).

In addition, consistent with requirements under unexpected permanent closure addressed below, the nature and extent of insurance coverage, and major equipment warranties must also be included in the on-site contingency plan. In addition, the status of the insurance coverage and major equipment warranties must be updated in the annual compliance reports.

In the event of an unexpected temporary closure, the project owner shall notify the CPM, as well as other responsible agencies, by telephone, fax, e-mail, etc., within 24 hours and shall take all necessary steps to implement the on-site contingency plan. The project owner shall keep the CPM informed of the circumstances and expected duration of the closure.

If the CPM determines that a temporary closure is likely to be permanent, or for a duration of more than twelve months, a closure plan consistent with that for a planned closure shall be developed and submitted to the CPM within 90 days of the CPM's determination (or other period of time agreed to by the CPM).

UNEXPECTED PERMANENT CLOSURE

The on-site contingency plan required for unexpected temporary closure shall also cover unexpected permanent facility closure. All of the requirements specified for unexpected temporary closure shall also apply to unexpected permanent closure.

In addition, the on-site contingency plan shall address how the project owner will ensure that all required closure steps will be successfully undertaken in the unlikely event of abandonment.

In the event of an unexpected permanent closure, the project owner shall notify the CPM, as well as other responsible agencies, by telephone, fax, e-mail, etc., within 24 hours and shall take all necessary steps to implement the on-site contingency plan. The project owner shall keep the CPM informed of the status of all closure activities.

A closure plan consistent with that for a planned closure shall be developed and submitted to the CPM within 90 days of the permanent closure (or other period of time agreed to by the CPM).

DELEGATE AGENCIES

To the extent permitted by law, the Energy Commission may delegate authority for compliance verification and enforcement to various state and local agencies that have expertise in subject areas where specific requirements have been established as a condition of certification. If a delegate agency does not participate in this program, the Energy Commission staff will establish an alternative method of verification and enforcement. Energy Commission staff reserves the right to independently verify compliance.

In performing construction and operation monitoring of the project, the Energy Commission staff acts as, and has the authority of, the Chief Building Official (CBO). The Commission staff retains this authority when delegating to a local CBO. Delegation of authority for compliance verification includes the authority for enforcing codes, the responsibility for code interpretation where required, and the authority to use discretion, as necessary, in implementing the various codes and standards.

Whenever an agency's responsibility for a particular area is transferred by law to another entity, all references to the original agency shall be interpreted to apply to the successor entity.

ENFORCEMENT

The Energy Commission's legal authority to enforce the terms and conditions of its Decision is specified in Public Resources Code sections 25534 and 25900. The Energy Commission may amend or revoke the certification for any facility, and may impose a civil penalty for any significant failure to comply with the terms or conditions of the Commission Decision. The specific action and amount of any

fines the Commission may impose would take into account the specific circumstances of the incident(s). This would include such factors as the previous compliance history, whether the cause of the incident involves willful disregard of LORS, inadvertence, unforeseeable events, and other factors the Commission may consider.

Moreover, to ensure compliance with the terms and conditions of certification and applicable laws, ordinances, regulations, and standards, delegate agencies are authorized to take any action allowed by law in accordance with their statutory authority, regulations, and administrative procedures.

NONCOMPLIANCE COMPLAINT PROCEDURES

Any person or agency may file a complaint alleging noncompliance with the conditions of certification. Such a complaint will be subject to review by the Energy Commission pursuant to Title 20, California Code of Regulations, section 1230 et. seq., but in many instances the noncompliance can be resolved by using the informal dispute resolution process. Both the informal and formal complaint procedure, as described in current State law and regulations, are described below. They shall be followed unless superseded by current law or regulations.

INFORMAL DISPUTE RESOLUTION PROCEDURE

The following procedure is designed to informally resolve disputes concerning interpretation of compliance with the requirements of this compliance plan. The project owner, the Energy Commission, or any other party, including members of the public, may initiate this procedure for resolving a dispute. Disputes may pertain to actions or decisions made by any party including the Energy Commission's delegate agents.

This procedure may precede the more formal complaint and investigation procedure specified in Title 20, California Code of Regulations, section 1230 et. seq., but is not intended to be a substitute for, or prerequisite to it. This informal procedure may not be used to change the terms and conditions of certification as approved by the Energy Commission, although the agreed upon resolution may result in a project owner, or in some cases the Energy Commission staff, proposing an amendment.

The procedure encourages all parties involved in a dispute to discuss the matter and to reach an agreement resolving the dispute. If a dispute cannot be resolved, then the matter must be referred to the full Energy Commission for consideration via the complaint and investigation process. The procedure for informal dispute resolution is as follows:

REQUEST FOR INFORMAL INVESTIGATION

Any individual, group, or agency may request the Energy Commission to conduct an informal investigation of alleged noncompliance with the Energy Commission's terms and conditions of certification. All requests for informal investigations shall be made to the designated CPM.

Upon receipt of a request for informal investigation, the CPM shall promptly notify the project owner of the allegation by telephone and letter. All known and relevant information of the alleged noncompliance shall be provided to the project owner and to the Energy Commission staff. The CPM will evaluate the request and the information to determine if further investigation is necessary. If the CPM finds that further investigation is necessary, the project owner will be asked to promptly investigate the matter and within seven (7) working days of the CPM's request, provide a written report of the results of the investigation, including corrective measures proposed or undertaken, to the CPM. Depending on the urgency of the noncompliance matter, the CPM may conduct a site visit and/or request the project owner to provide an initial report, within forty-eight (48) hours, followed by a written report filed within seven (7) days.

REQUEST FOR INFORMAL MEETING

In the event that either the party requesting an investigation or the Energy Commission staff is not satisfied with the project owner's report, investigation of the event, or corrective measures undertaken, either party may submit a written request to the CPM for a meeting with the project owner. Such request shall be made within fourteen (14) days of the project owner's filing of its written report. Upon receipt of such a request, the CPM shall:

1. immediately schedule a meeting with the requesting party and the project owner, to be held at a mutually convenient time and place;
2. secure the attendance of appropriate Energy Commission staff and staff of any other agency with expertise in the subject area of concern as necessary;
3. conduct such meeting in an informal and objective manner so as to encourage the voluntary settlement of the dispute in a fair and equitable manner; and,
4. after the conclusion of such a meeting, promptly prepare and distribute copies to all in attendance and to the project file, a summary memorandum which fairly and accurately identifies the positions of all parties and any conclusions reached. If an agreement has not been reached, the CPM shall inform the complainant of the formal complaint process and requirements provided under Title 20, California Code of Regulations, section 1230 et. seq.

FORMAL DISPUTE RESOLUTION PROCEDURE-COMPLAINTS AND INVESTIGATIONS

If either the project owner, Energy Commission staff, or the party requesting an investigation is not satisfied with the results of the informal dispute resolution process, such party may file a complaint or a request for an investigation with the Energy Commission's General Counsel. Disputes may pertain to actions or decisions made by any party including the Energy Commission's delegate agents. Requirements for complaint filings and a description of how complaints are processed are in Title 20, California Code of Regulations, section 1230 et. seq.

The Chairman, upon receipt of a written request stating the basis of the dispute, may grant a hearing on the matter, consistent with the requirements of noticing

provisions. The Commission shall have the authority to consider all relevant facts involved and make any appropriate orders consistent with its jurisdiction (Title 20, California Code of Regulations, sections 1232 - 1236).

POST CERTIFICATION CHANGES TO THE COMMISSION DECISION: AMENDMENTS, INSIGNIFICANT PROJECT CHANGES AND VERIFICATION CHANGES

The project owner must petition the Energy Commission, pursuant to Title 20, California Code of Regulations, section 1769, to 1) delete or change a condition of certification; 2) modify the project design or operational requirements; and 3) transfer ownership or operational control of the facility.

A petition is required for **amendments** and for **insignificant project changes**. For verification changes, a letter from the project owner is sufficient. In all cases, the petition or letter requesting a change should be submitted to the Commission's Docket in accordance with Title 20, California Code of Regulations, section 1209. The criteria that determine which type of change process applies are explained below.

AMENDMENT

A proposed change will be processed as an amendment if it involves a change to the requirement or protocol (and in some cases the verification) portion of a condition of certification, an ownership or operator change, or a potential significant environmental impact.

INSIGNIFICANT PROJECT CHANGE

The proposed change will be processed as an insignificant project change if it does not require changing the language in a condition of certification, have a potential for significant environmental impact, and cause the project to violate laws, ordinances, regulations or standards.

VERIFICATION CHANGE

The proposed change will be processed as a verification change if it involves only the language in the verification portion of the condition of certification. This procedure can only be used to change verification requirements that are of an administrative nature, usually the timing of a required action. In the unlikely event that verification language contains technical requirements, the proposed change must be processed as an amendment.

KEY EVENT LIST

PROJECT: _____

DOCKET #: _____

COMPLIANCE PROJECT MANAGER: _____

EVENT DESCRIPTION	DATE
Certification Date	
Online Date	
POWER PLANT SITE ACTIVITIES	
Start Site Mobilization	
Start Ground Disturbance	
Start Rough Grading	
Start Construction	
First Combustion of Gas Turbine	
Start Commercial Operation	
Complete All Construction	
TRANSMISSION LINE ACTIVITIES	
Start T/L Construction	
Synchronization with Grid	
Complete T/L Construction	
FUEL SUPPLY LINE ACTIVITIES	
Start Fuel Supply Line Construction	
Complete Fuel Supply Line Construction	
WATER SUPPLY LINE ACTIVITIES	
Start Water Supply Line Construction	
Complete Water Supply Line Construction	

MORRO BAY POWER PROJECT
PREPARATION TEAM

Executive Summary ..... Kae Lewis

Introduction ..... Kae Lewis

Project Description ..... Kae Lewis

Air Quality ..... Magdy Badr

Public Health ..... Obed Odoemelam

Worker Safety and Fire Protection ..... Alvin Greenberg

Transmission Line Safety and Nuisance ..... Obed Odoemelam

Hazardous Materials Management ..... Alvin Greenberg

Waste Management ..... Alvin Greenberg

Land Use ..... Mark Hamblin / Sue Walker

Traffic and Transportation ..... James Fore / Steve Brown

Noise ..... Jim Buntin

Visual Resources ..... Michael Clayton

Cultural Resources ..... Dorothy Torres / Gary Reinoehl

Socioeconomic Resources ..... Amanda Stennick / Michael Fajans

Biological Resources ..... Dick Anderson

Soil and Water Resources ..... Joe Crea / Dominique Brocard
..... Jim Henneforth / Jim Thurber / Mike Krolak

Geology and Paleontology ..... Neal Mace

Facility Design ..... Brian Payne

Power Plant Reliability ..... Dr. Hamid Rastegar

Power Plant Efficiency ..... Dr. Hamid Rastegar

Transmission System Engineering ..... Richard Minetto / Laiping Ng

Alternatives ..... Susan Lee

Compliance Monitoring and Facility Closure ..... Connie Bruins

Project Secretary ..... Luz Manriquez