APPENDIX 2A

Additional Heat Balance Diagrams

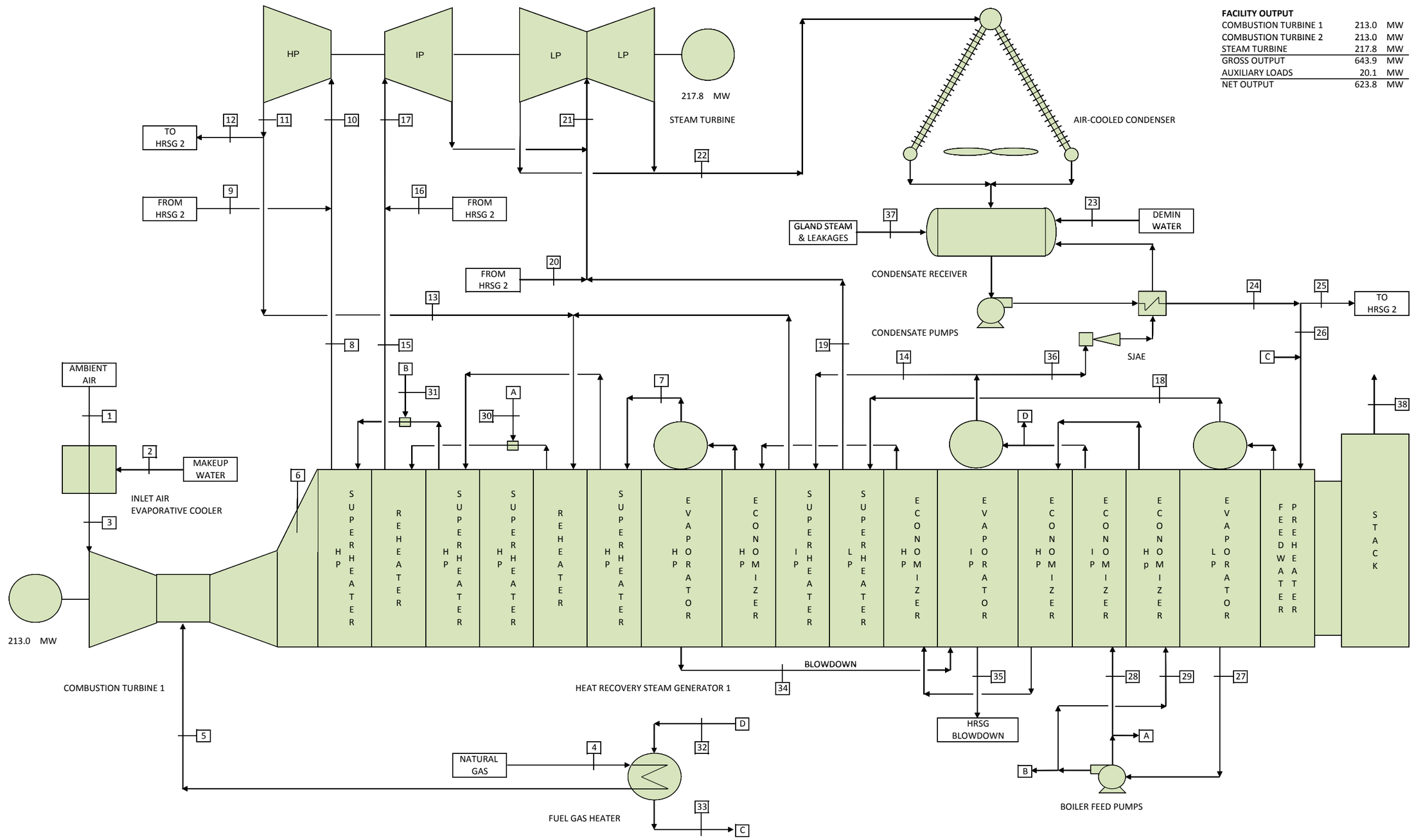

FACILITY OUTPUT

COMBUSTION TURBINE 1	213.0	MW
COMBUSTION TURBINE 2	213.0	MW
STEAM TURBINE	217.8	MW
GROSS OUTPUT	643.9	MW
AUXILIARY LOADS	20.1	MW
NET OUTPUT	623.8	MW

Rev.		By	Date
A	Issued for AFC	JBM	6/22/2009

Notes:
1. Fuel gas flowrates are based on an assumed natural gas higher heating value of 23,130 Btu/lb.
2. Balance shown with HRSG blowdown at 0% of steaming rate.

Design Case: Case B

Configuration:	2x1	Site Altitude:	21 ft
Dry Bulb Temp.:	59 deg. F	Relative Humidity:	60 %
No. Units On:	2	CTG Load:	100 %
Evap. Cooler:	On		

RADBACK ENERGY

Contra Costa Generating Station

Heat and Mass Balance Diagram

Rev. A

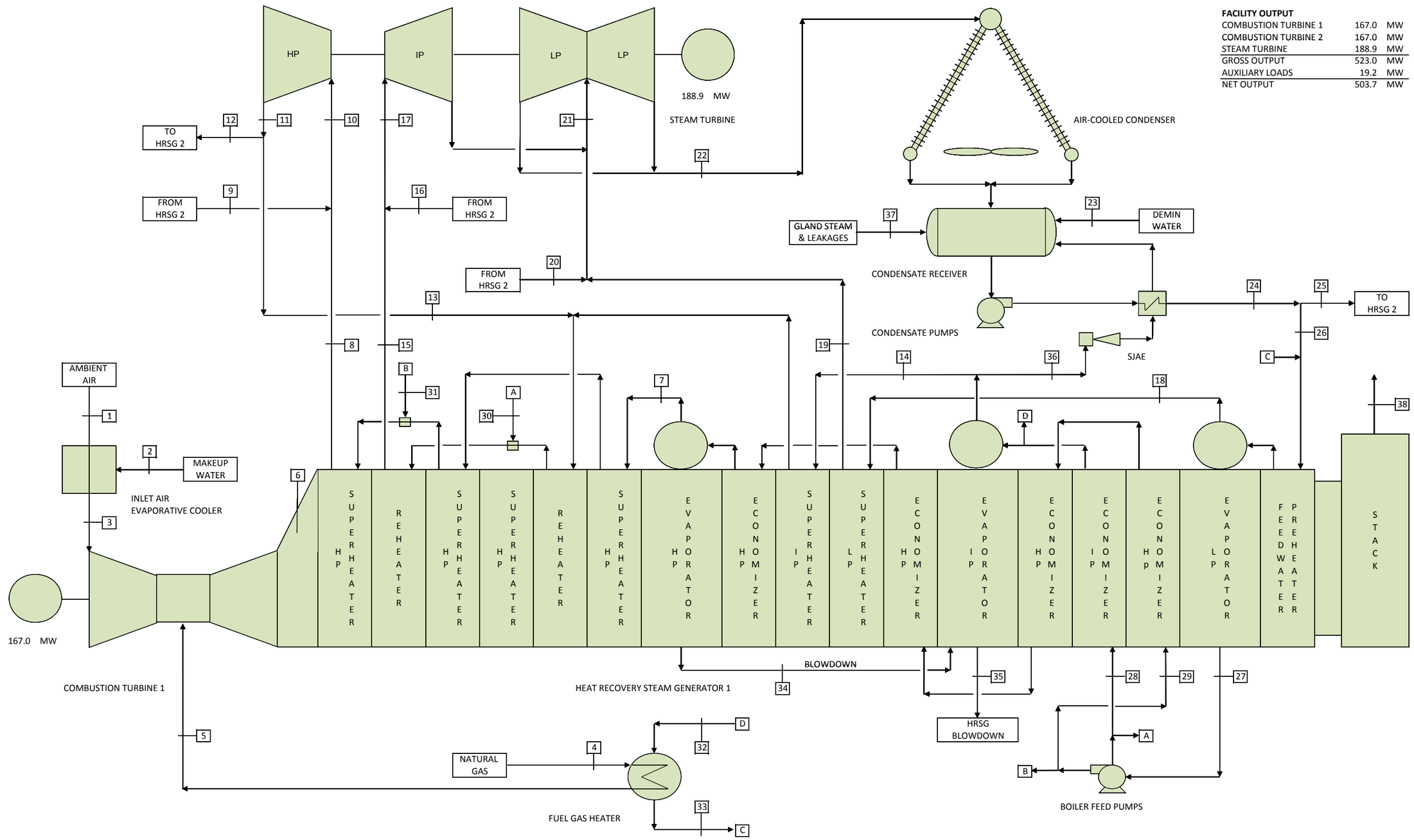

FACILITY OUTPUT

COMBUSTION TURBINE 1	167.0	MW
COMBUSTION TURBINE 2	167.0	MW
STEAM TURBINE	188.9	MW
GROSS OUTPUT	523.0	MW
AUXILIARY LOADS	19.2	MW
NET OUTPUT	503.7	MW

Rev.		By	Date
A	Issued for AFC	JBM	6/22/2009

Notes:
1. Fuel gas flowrates are based on an assumed natural gas higher heating value of 23,130 Btu/lb.
2. Balance shown with HRSG blowdown at 0% of steaming rate.

Design Case: Case D

Configuration:	2x1	Site Altitude:	21 ft
Dry Bulb Temp.:	59 deg. F	Relative Humidity:	60 %
No. Units On:	2	CTG Load:	80 %
Evap. Cooler:	Off		

RADBACK ENERGY

Contra Costa Generating Station

Heat and Mass Balance Diagram

Rev. A

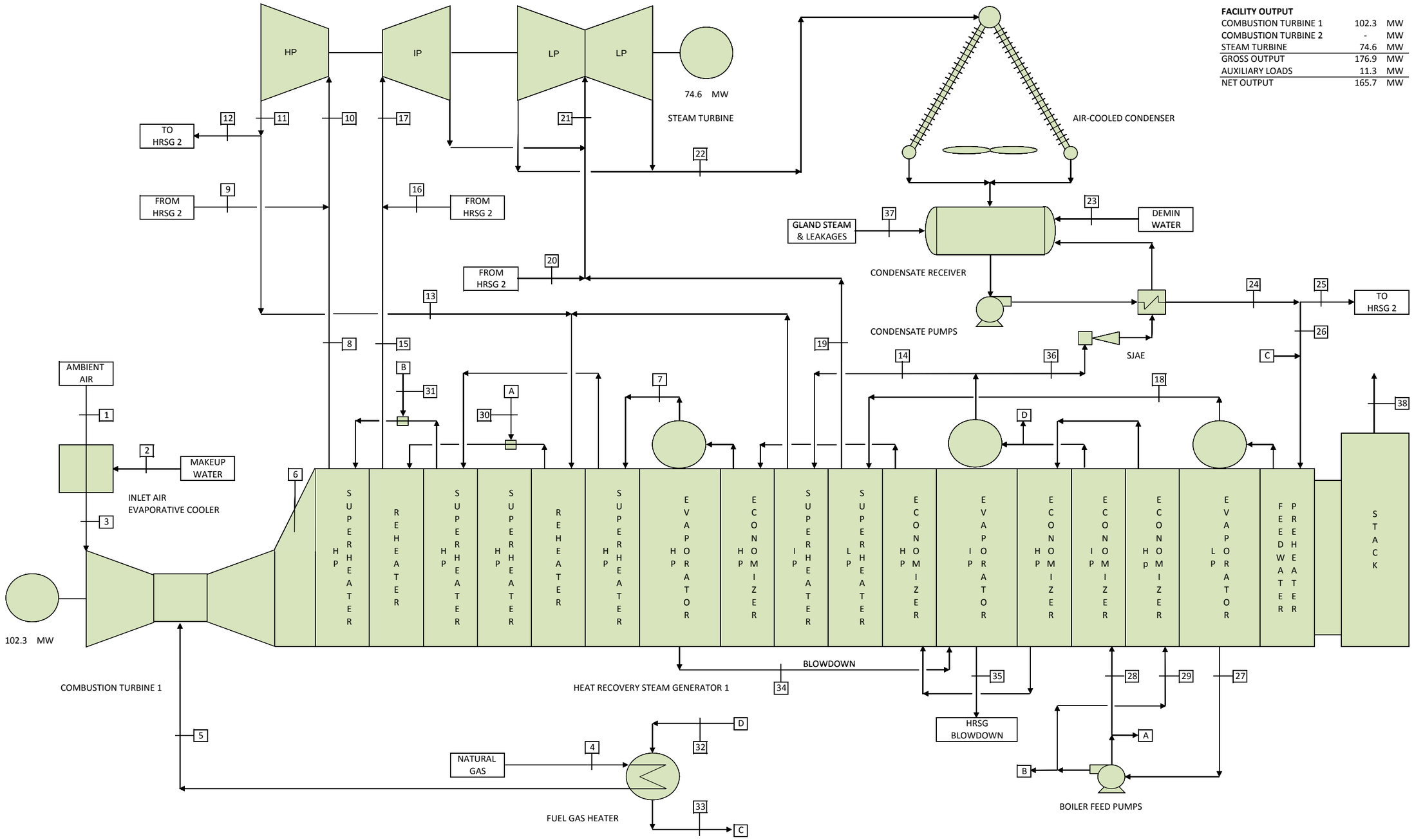

FACILITY OUTPUT

COMBUSTION TURBINE 1	102.3	MW
COMBUSTION TURBINE 2	-	MW
STEAM TURBINE	74.6	MW
GROSS OUTPUT	176.9	MW
AUXILIARY LOADS	11.3	MW
NET OUTPUT	165.7	MW

Rev.		By	Date
A	Issued for AFC	JBM	6/22/2009

Notes:
1. Fuel gas flowrates are based on an assumed natural gas higher heating value of 23,130 Btu/lb.
2. Balance shown with HRSG blowdown at 0% of steaming rate.

Design Case: Case R

Configuration:	2x1	Site Altitude:	21 ft
Dry Bulb Temp.:	59 deg. F	Relative Humidity:	60 %
No. Units On:	1	CTG Load:	49 %
Evap. Cooler:	Off		

RADBACK ENERGY

Contra Costa Generating Station

Heat and Mass Balance Diagram

Rev. A

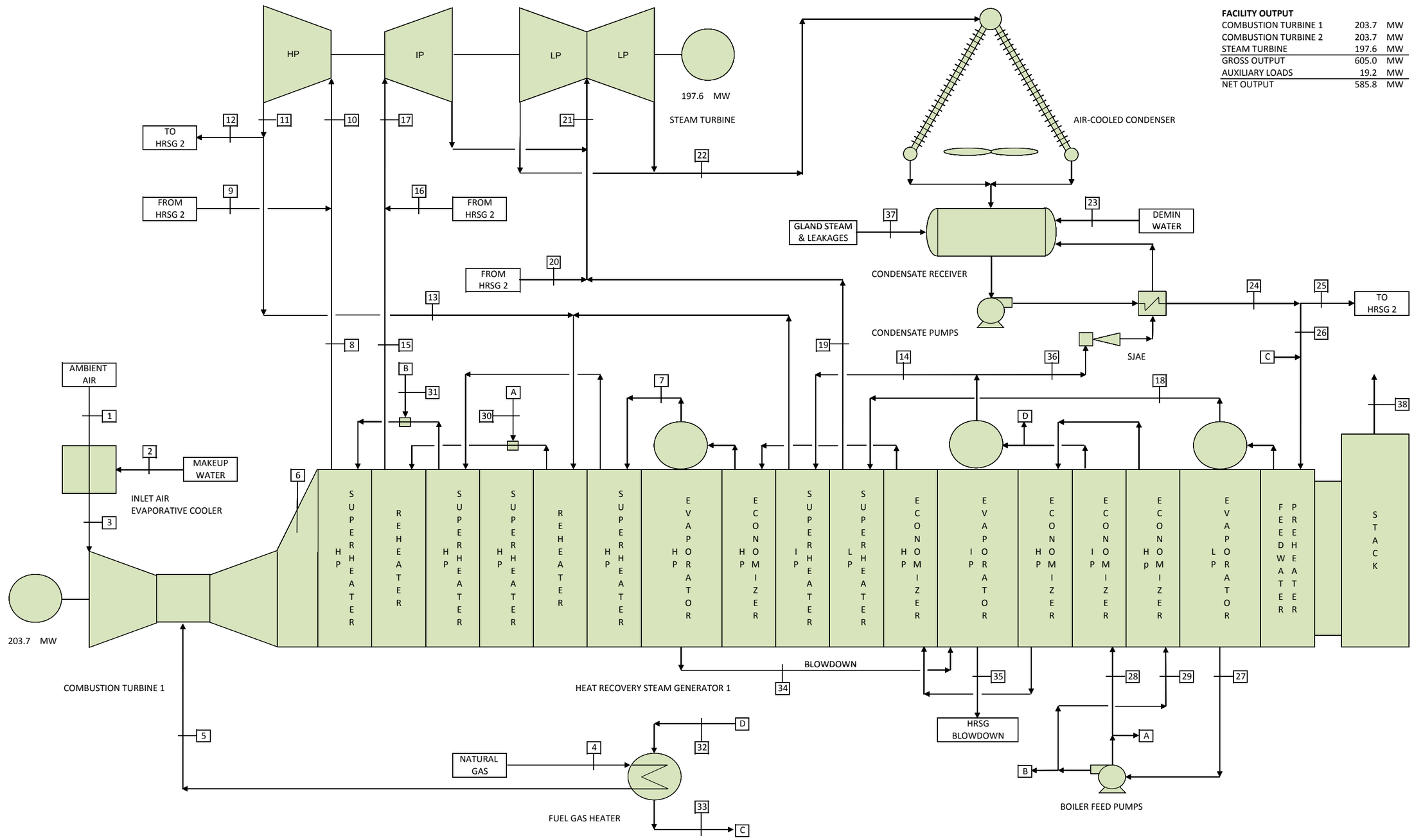

FACILITY OUTPUT

COMBUSTION TURBINE 1	203.7	MW
COMBUSTION TURBINE 2	203.7	MW
STEAM TURBINE	197.6	MW
GROSS OUTPUT	605.0	MW
AUXILIARY LOADS	19.2	MW
NET OUTPUT	585.8	MW

Rev.		By	Date
A	Issued for AFC	JBM	6/22/2009

Notes:
1. Fuel gas flowrates are based on an assumed natural gas higher heating value of 23,130 Btu/lb.
2. Balance shown with HRSG blowdown at 0% of steaming rate.

Design Case: Case H

Configuration:	2x1	Site Altitude:	21 ft
Dry Bulb Temp.:	104 deg. F	Relative Humidity:	18 %
No. Units On:	2	CTG Load:	100 %
Evap. Cooler:	On		

RADBACK ENERGY

Contra Costa Generating Station

Heat and Mass Balance Diagram

Rev. A

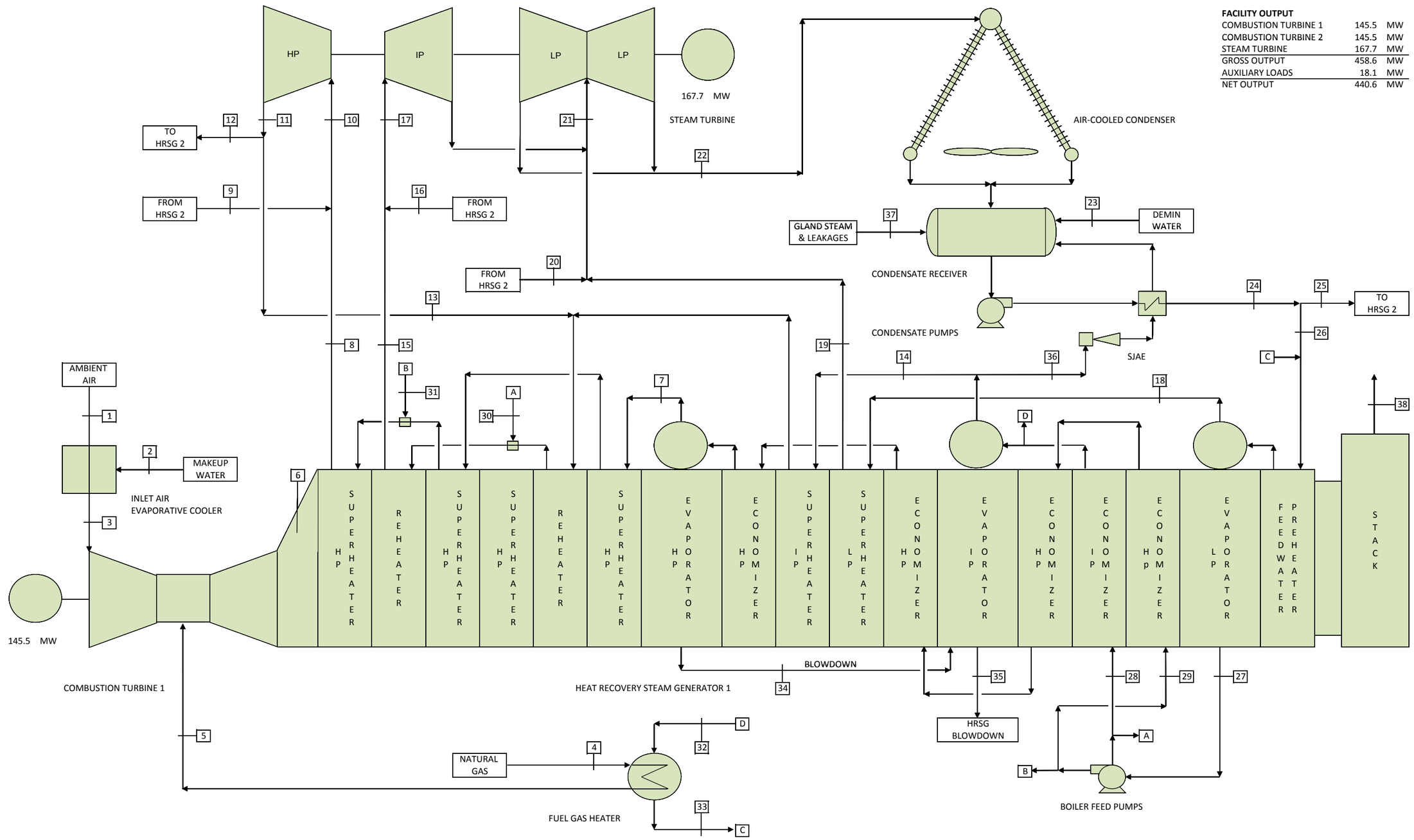

FACILITY OUTPUT

COMBUSTION TURBINE 1	145.5	MW
COMBUSTION TURBINE 2	145.5	MW
STEAM TURBINE	167.7	MW
GROSS OUTPUT	458.6	MW
AUXILIARY LOADS	18.1	MW
NET OUTPUT	440.6	MW

Rev.		By	Date
A	Issued for AFC	JBM	6/22/2009

Notes:
1. Fuel gas flowrates are based on an assumed natural gas higher heating value of 23,130 Btu/lb.
2. Balance shown with HRSG blowdown at 0% of steaming rate.

Design Case: Case J

Configuration:	2x1	Site Altitude:	21 ft
Dry Bulb Temp.:	104 deg. F	Relative Humidity:	18 %
No. Units On:	2	CTG Load:	80 %
Evap. Cooler:	Off		

RADBACK ENERGY

Contra Costa Generating Station

Heat and Mass Balance Diagram

Rev. A

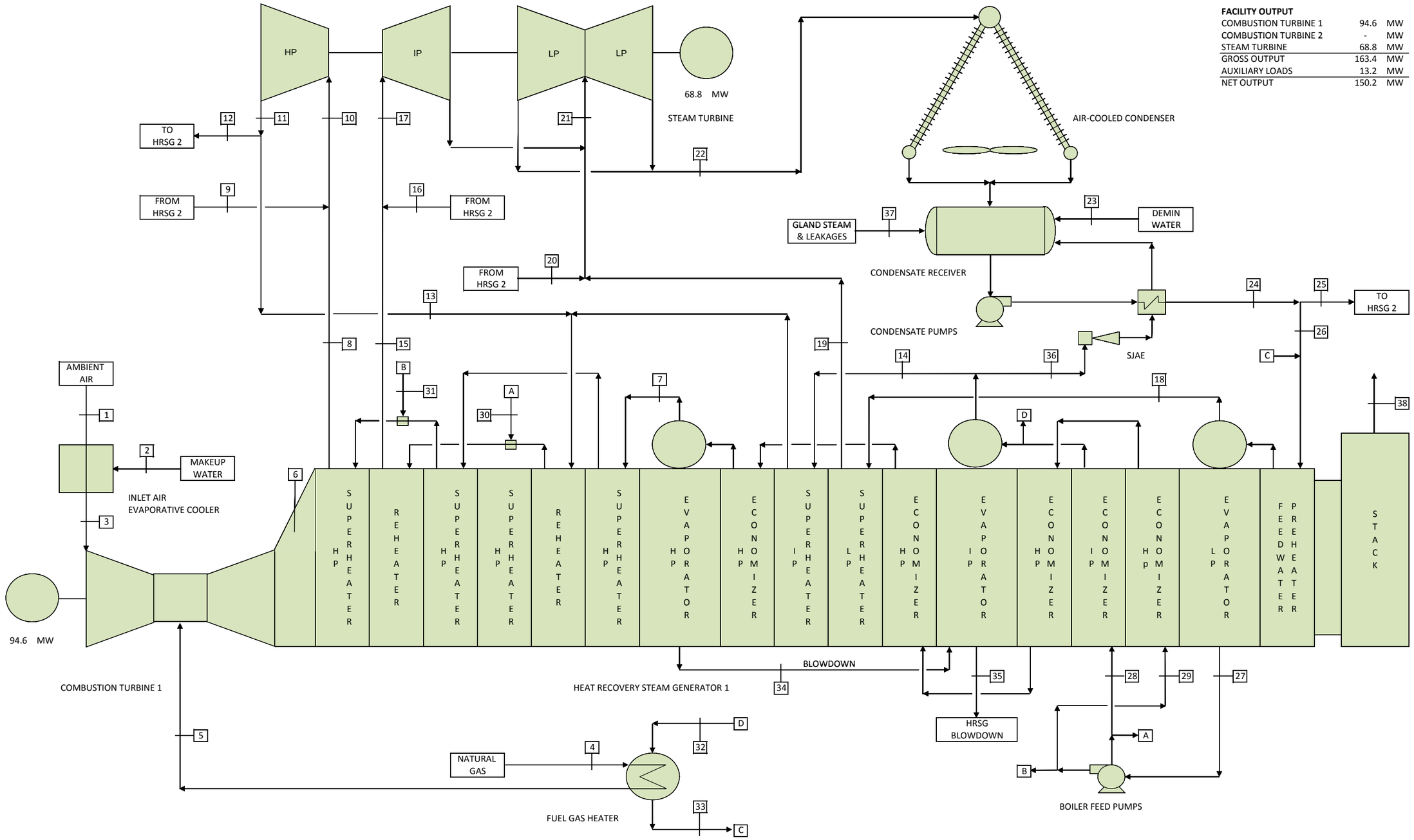

FACILITY OUTPUT

COMBUSTION TURBINE 1	94.6	MW
COMBUSTION TURBINE 2	-	MW
STEAM TURBINE	68.8	MW
GROSS OUTPUT	163.4	MW
AUXILIARY LOADS	13.2	MW
NET OUTPUT	150.2	MW

Rev.		By	Date
A	Issued for AFC	JBM	6/22/2009

Notes:
1. Fuel gas flowrates are based on an assumed natural gas higher heating value of 23,130 Btu/lb.
2. Balance shown with HRSG blowdown at 0% of steaming rate.

Design Case: Case X

Configuration:	2x1	Site Altitude:	21 ft
Dry Bulb Temp.:	104 deg. F	Relative Humidity:	18 %
No. Units On:	1	CTG Load:	52 %
Evap. Cooler:	Off		

RADBACK ENERGY

Contra Costa Generating Station

Heat and Mass Balance Diagram

Rev. A

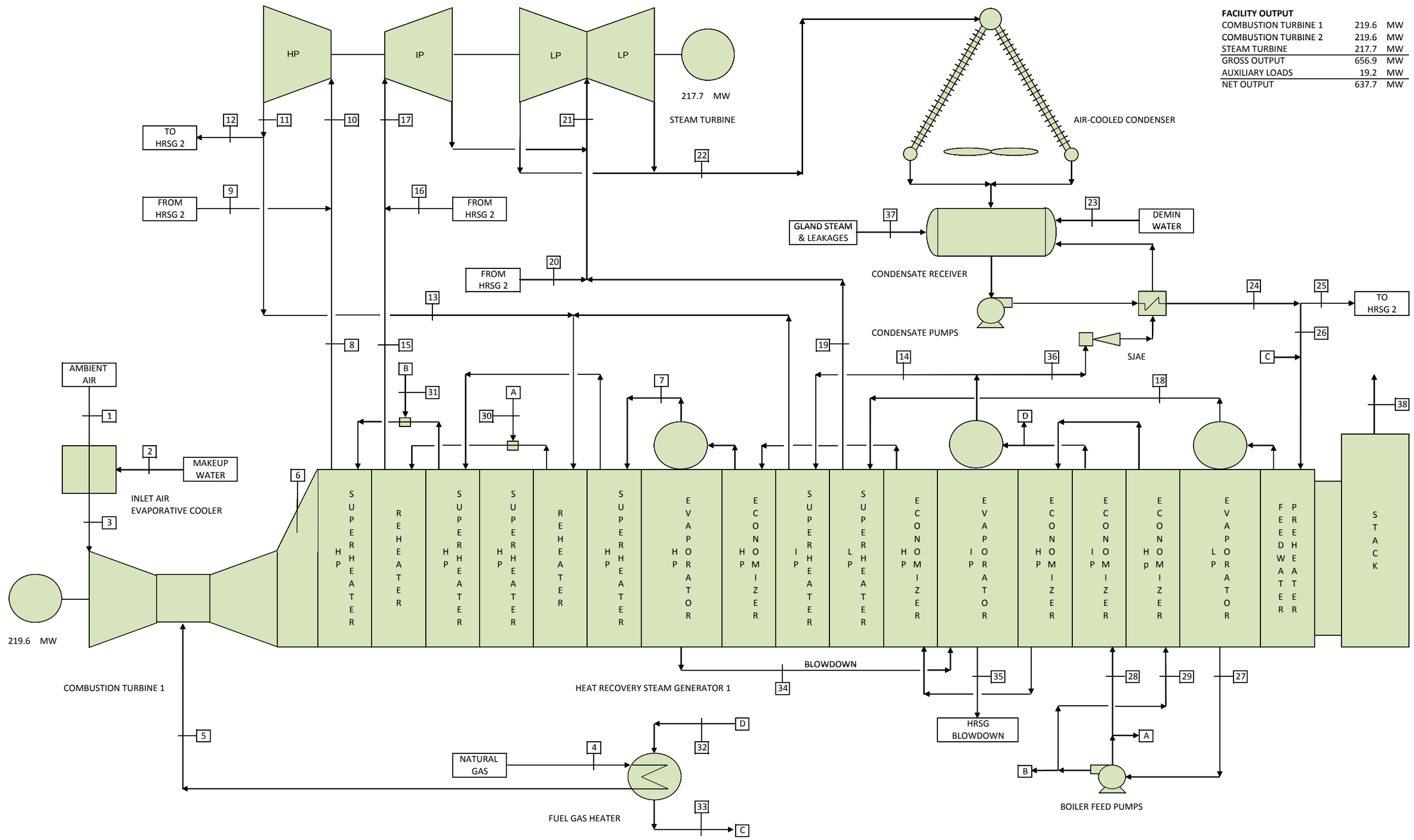

FACILITY OUTPUT

COMBUSTION TURBINE 1	219.6	MW
COMBUSTION TURBINE 2	219.6	MW
STEAM TURBINE	217.7	MW
GROSS OUTPUT	656.9	MW
AUXILIARY LOADS	19.2	MW
NET OUTPUT	637.7	MW

Rev.		By	Date
A	Issued for AFC	JBM	6/22/2009

Notes:
1. Fuel gas flowrates are based on an assumed natural gas higher heating value of 23,130 Btu/lb.
2. Balance shown with HRSG blowdown at 0% of steaming rate.

Design Case: Case 01C

Configuration:	2x1	Site Altitude:	21 ft
Dry Bulb Temp.:	34 deg. F	Relative Humidity:	83 %
No. Units On:	2	CTG Load:	100 %
Evap. Cooler:	Off		

RADBACK ENERGY

Contra Costa Generating Station

Heat and Mass Balance Diagram

Rev. A

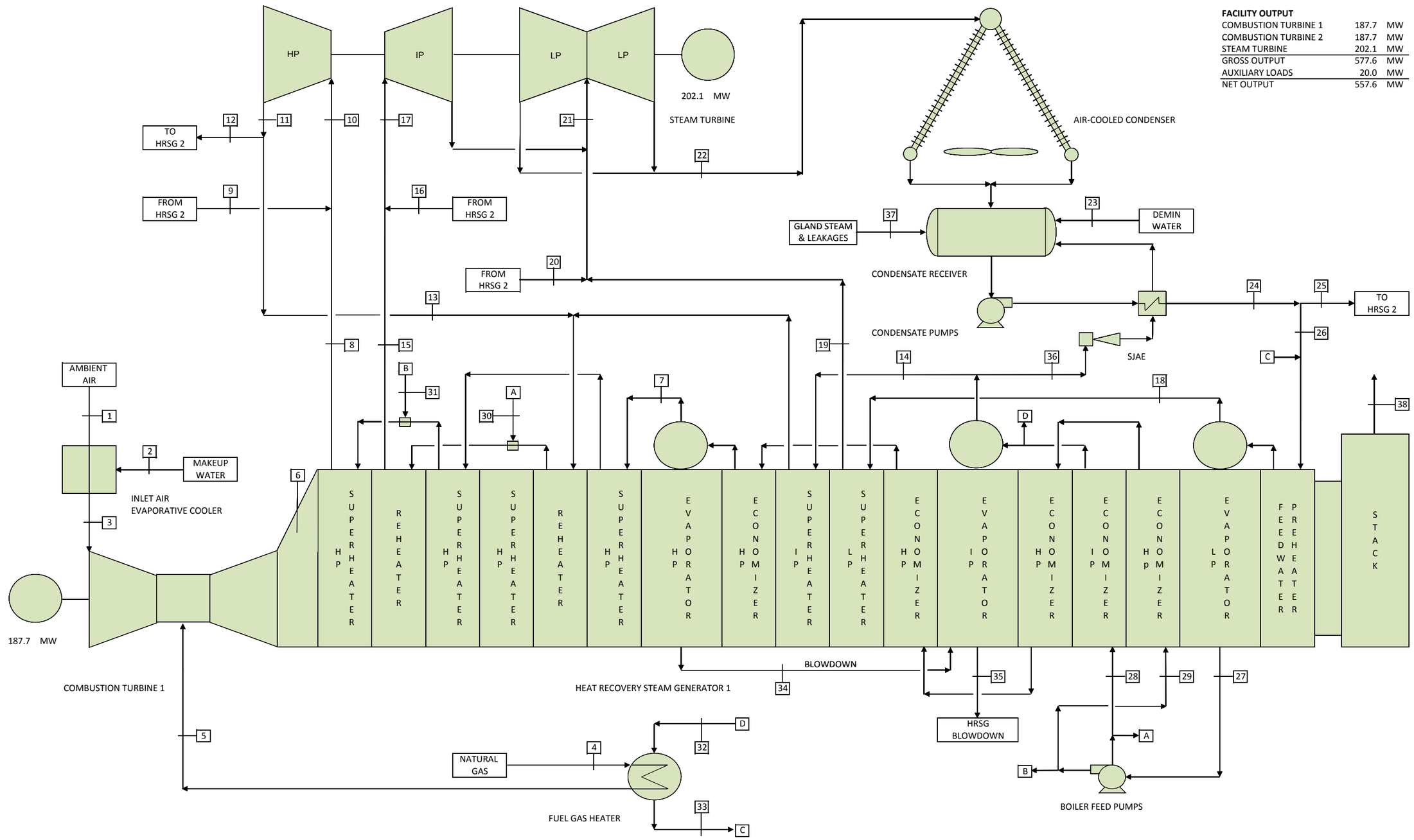

FACILITY OUTPUT

COMBUSTION TURBINE 1	187.7	MW
COMBUSTION TURBINE 2	187.7	MW
STEAM TURBINE	202.1	MW
GROSS OUTPUT	577.6	MW
AUXILIARY LOADS	20.0	MW
NET OUTPUT	557.6	MW

Rev.		By	Date
A	Issued for AFC	JBM	6/22/2009

Notes:
1. Fuel gas flowrates are based on an assumed natural gas higher heating value of 23,130 Btu/lb.
2. Balance shown with HRSG blowdown at 0% of steaming rate.

Design Case: Case 01F

Configuration:	2x1	Site Altitude:	21 ft
Dry Bulb Temp.:	34 deg. F	Relative Humidity:	83 %
No. Units On:	2	CTG Load:	80 %
Evap. Cooler:	Off		

RADBACK ENERGY

Contra Costa Generating Station

Heat and Mass Balance Diagram

Rev. A

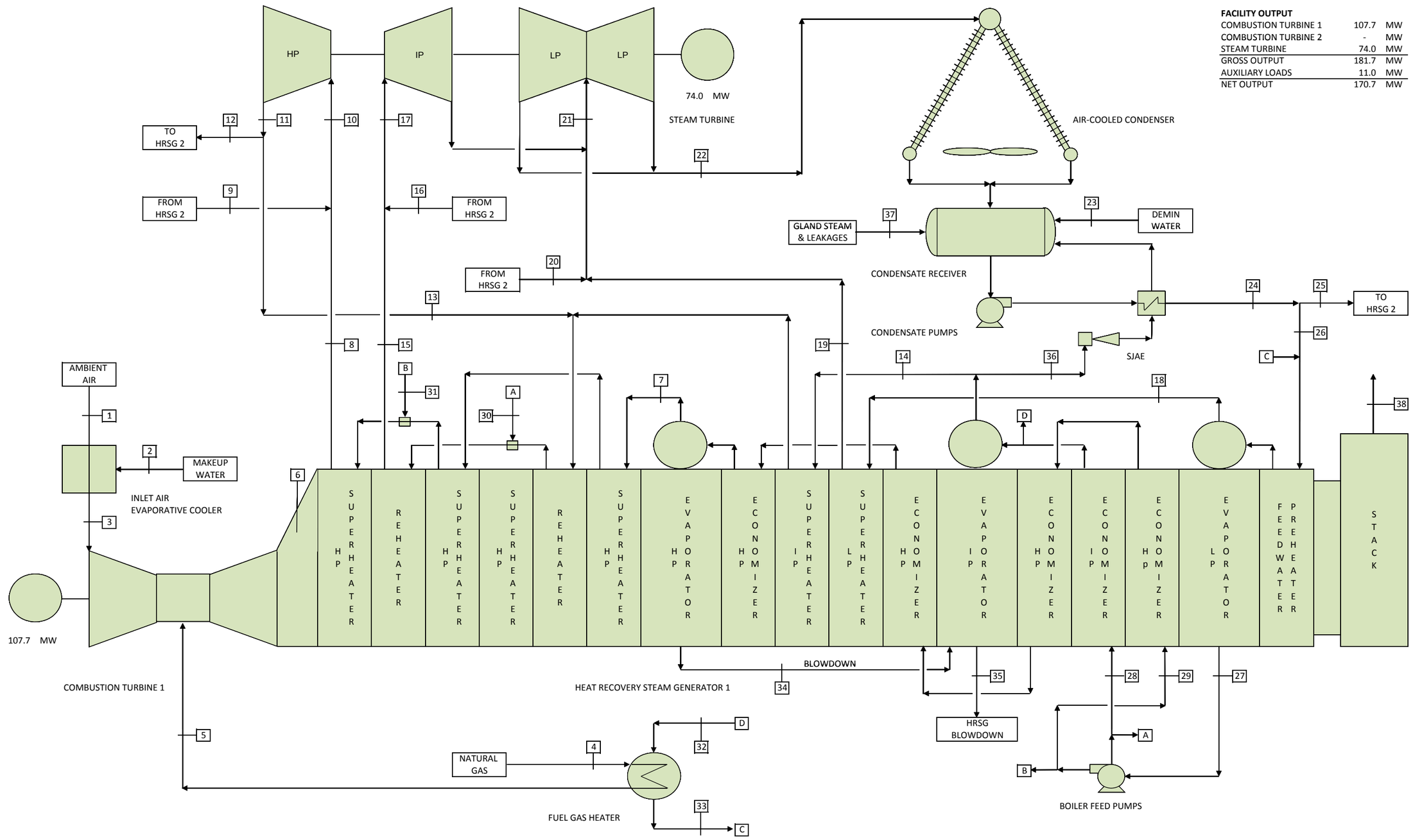

FACILITY OUTPUT

COMBUSTION TURBINE 1	107.7	MW
COMBUSTION TURBINE 2	-	MW
STEAM TURBINE	74.0	MW
GROSS OUTPUT	181.7	MW
AUXILIARY LOADS	11.0	MW
NET OUTPUT	170.7	MW

Rev.		By	Date
A	Issued for AFC	JBM	6/22/2009

Notes:
1. Fuel gas flowrates are based on an assumed natural gas higher heating value of 23,130 Btu/lb.
2. Balance shown with HRSG blowdown at 0% of steaming rate.

Design Case: Case 01E

Configuration:	2x1	Site Altitude:	21 ft
Dry Bulb Temp.:	34 deg. F	Relative Humidity:	83 %
No. Units On:	1	CTG Load:	49 %
Evap. Cooler:	Off		

RADBACK ENERGY

Contra Costa Generating Station

Heat and Mass Balance Diagram

Rev. A

Contra Costa Generating Station

Heat and Mass Balance Data

Case B

Stream No.	Units	1	2	3	4	5	6	7	8
Mass Flow	lb/hr	4,019,389	5,087	4,024,477	91,048	91,048	4,115,525	478,789	478,852
Temperature	°F	53	70	59	59	110	1,114	633	1,051
Pressure	psia	14.55	75	14.68	500	500	15.26	1,961	1,895
Stream No.	**Units**	**9**	**10**	**11**	**12**	**13**	**14**	**15**	**16**
Mass Flow	lb/hr	478,852	957,703	920,085	460,043	460,043	81,719	541,436	541,436
Temperature	°F	1,051	1,049	672	671	671	458	1,048	1,048
Pressure	psia	1,895	1,849	441	434	434	456	411	411
Stream No.	**Units**	**17**	**18**	**19**	**20**	**21**	**22**	**23**	**24**
Mass Flow	lb/hr	1,082,872	82,223	82,223	82,223	1,278,493	1,278,493	0	1,286,236
Temperature	°F	1,047	312	580	580	597	103	70	102
Pressure	psia	400	79	75	75	68	1.05	5	130
Stream No.	**Units**	**25**	**26**	**27**	**28**	**29**	**30**	**31**	**32**
Mass Flow	lb/hr	643,118	643,118	568,520	89,994	478,789	-325	63	7,625
Temperature	°F	102	102	312	313	316	313	316	455
Pressure	psia	130	130	99	564	2,018	564	2,018	554
Stream No.	**Units**	**33**	**34**	**35**	**36**	**37**	**38**		
Mass Flow	lb/hr	7,625	0	0	650	6,443	4,115,525		
Temperature	°F	119	633	458	458	103	195		
Pressure	psia	544	1,961	456	456	1.05	14.68		

Contra Costa Generating Station

Heat and Mass Balance Data

Case D

Stream No.	Units	1	2	3	4	5	6	7	8
Mass Flow	lb/hr	3,241,369	0	3,241,369	74,840	74,840	3,316,209	385,881	403,319
Temperature	°F	59	70	59	59	110	1,173	610	1,051
Pressure	psia	14.55	75	14.68	500	500	15.06	1,657	1,605
Stream No.	**Units**	**9**	**10**	**11**	**12**	**13**	**14**	**15**	**16**
Mass Flow	lb/hr	403,319	806,638	774,953	387,477	387,477	61,537	483,851	483,851
Temperature	°F	1,051	1,049	687	686	686	445	1,049	1,049
Pressure	psia	1,605	1,567	393	387	387	401	368	368
Stream No.	**Units**	**17**	**18**	**19**	**20**	**21**	**22**	**23**	**24**
Mass Flow	lb/hr	967,702	60,163	60,163	60,163	1,114,286	1,114,286	0	1,121,013
Temperature	°F	1,048	299	568	568	592	101	70	100
Pressure	psia	357	66	64	64	59	0.98	5	130
Stream No.	**Units**	**25**	**26**	**27**	**28**	**29**	**30**	**31**	**32**
Mass Flow	lb/hr	560,507	560,507	507,004	69,266	385,881	34,838	17,439	7,079
Temperature	°F	100	100	299	300	303	300	303	437
Pressure	psia	130	130	86	473	1,694	473	1,694	463
Stream No.	**Units**	**33**	**34**	**35**	**36**	**37**	**38**		
Mass Flow	lb/hr	7,079	0	0	650	5,427	3,316,209		
Temperature	°F	140	610	445	445	101	180		
Pressure	psia	453	1,657	401	401	0.98	14.68		

Contra Costa Generating Station

Heat and Mass Balance Data

Case R

Stream No.	Units	1	2	3	4	5	6	7	8
Mass Flow	lb/hr	2,685,762	0	2,685,762	57,849	57,849	2,743,611	328,987	353,275
Temperature	°F	59	70	59	59	110	1,213	538	1,050
Pressure	psia	14.55	75	14.68	500	500	14.94	948	913
Stream No.	**Units**	**9**	**10**	**11**	**12**	**13**	**14**	**15**	**16**
Mass Flow	lb/hr	353,275	353,050	339,183	339,183	339,183	45,575	434,359	434,359
Temperature	°F	1,050	1,049	718	718	718	387	1,049	1,049
Pressure	psia	913	900	198	196	196	212	166	166
Stream No.	**Units**	**17**	**18**	**19**	**20**	**21**	**22**	**23**	**24**
Mass Flow	lb/hr	434,359	40,676	40,676	40,676	486,528	486,528	0	490,428
Temperature	°F	1,048	256	512	512	579	101	70	104
Pressure	psia	161	33	31	31	26	0.98	5	130
Stream No.	**Units**	**25**	**26**	**27**	**28**	**29**	**30**	**31**	**32**
Mass Flow	lb/hr	0	490,428	456,209	53,332	328,987	49,601	24,288	6,457
Temperature	°F	104	104	256	257	258	257	258	378
Pressure	psia	130	130	53	269	975	269	975	259
Stream No.	**Units**	**33**	**34**	**35**	**36**	**37**	**38**		
Mass Flow	lb/hr	6,457	0	0	1,300	2,600	2,743,611		
Temperature	°F	126	538	387	387	101	160		
Pressure	psia	249	948	212	212	0.98	14.68		

Contra Costa Generating Station

Heat and Mass Balance Data

Case H

Stream No.	Units	1	2	3	4	5	6	7	8
Mass Flow	lb/hr	3,964,852	26,286	3,991,138	88,148	88,148	4,079,286	479,855	481,255
Temperature	°F	76	70	104	59	110	1,120	634	1,052
Pressure	psia	14.55	75	14.68	500	500	15.25	1,971	1,905
Stream No.	**Units**	**9**	**10**	**11**	**12**	**13**	**14**	**15**	**16**
Mass Flow	lb/hr	481,255	962,510	924,703	462,352	462,352	80,863	543,914	543,914
Temperature	°F	1,052	1,050	673	672	672	458	1,051	1,051
Pressure	psia	1,905	1,858	444	436	436	457	413	413
Stream No.	**Units**	**17**	**18**	**19**	**20**	**21**	**22**	**23**	**24**
Mass Flow	lb/hr	1,087,827	83,168	83,168	83,168	1,285,494	1,285,494	0	1,293,269
Temperature	°F	1,050	312	582	582	598	139	70	137
Pressure	psia	402	80	76	76	68	2.80	5	130
Stream No.	**Units**	**25**	**26**	**27**	**28**	**29**	**30**	**31**	**32**
Mass Flow	lb/hr	646,635	646,635	570,848	88,894	479,855	699	1,401	7,381
Temperature	°F	137	137	312	313	316	313	316	455
Pressure	psia	130	130	100	567	2,028	567	2,028	557
Stream No.	**Units**	**33**	**34**	**35**	**36**	**37**	**38**		
Mass Flow	lb/hr	7,381	0	0	650	6,475	4,079,286		
Temperature	°F	119	634	458	458	139	215		
Pressure	psia	547	1,971	457	457	2.80	14.68		

Contra Costa Generating Station

Heat and Mass Balance Data

Case 04B

Stream No.	Units	1	2	3	4	5	6	7	8
Mass Flow	lb/hr	3,087,806	0	3,087,806	68,681	68,681	3,156,487	369,702	393,398
Temperature	°F	104	70	104	59	110	1,203	606	1,052
Pressure	psia	14.55	75	14.68	500	500	15.02	1,617	1,567
Stream No.	**Units**	**9**	**10**	**11**	**12**	**13**	**14**	**15**	**16**
Mass Flow	lb/hr	393,398	786,796	755,893	377,947	377,947	57,046	481,195	481,195
Temperature	°F	1,052	1,050	692	692	692	444	1,051	1,051
Pressure	psia	1,567	1,530	391	385	385	397	366	366
Stream No.	**Units**	**17**	**18**	**19**	**20**	**21**	**22**	**23**	**24**
Mass Flow	lb/hr	962,389	56,818	56,818	56,818	1,101,634	1,101,634	0	1,108,227
Temperature	°F	1,050	298	567	567	590	134	70	133
Pressure	psia	356	65	63	63	58	2.48	5	130
Stream No.	**Units**	**25**	**26**	**27**	**28**	**29**	**30**	**31**	**32**
Mass Flow	lb/hr	554,114	554,114	503,479	63,879	369,702	46,202	23,697	6,183
Temperature	°F	133	133	298	299	301	299	301	434
Pressure	psia	130	130	85	461	1,651	461	1,651	451
Stream No.	**Units**	**33**	**34**	**35**	**36**	**37**	**38**		
Mass Flow	lb/hr	6,183	0	0	650	5,293	3,156,487		
Temperature	°F	122	606	444	444	134	196		
Pressure	psia	441	1,617	397	397	2.48	14.68		

Contra Costa Generating Station

Heat and Mass Balance Data

Case X

Stream No.	Units	1	2	3	4	5	6	7	8
Mass Flow	lb/hr	2,713,931	0	2,713,931	55,445	55,445	2,769,376	333,025	357,251
Temperature	°F	104	70	104	59	110	1,213	538	1,051
Pressure	psia	14.55	75	14.68	500	500	14.94	949	913
Stream No.	**Units**	**9**	**10**	**11**	**12**	**13**	**14**	**15**	**16**
Mass Flow	lb/hr	357,251	357,053	343,028	343,028	343,028	45,657	437,489	437,489
Temperature	°F	1,051	1,050	718	718	718	387	1,050	1,050
Pressure	psia	913	900	199	197	197	213	167	167
Stream No.	**Units**	**17**	**18**	**19**	**20**	**21**	**22**	**23**	**24**
Mass Flow	lb/hr	437,489	41,818	41,818	41,818	490,929	490,929	0	494,829
Temperature	°F	1,050	257	512	512	579	188	70	121
Pressure	psia	162	34	31	31	26	1.61	5	130
Stream No.	**Units**	**25**	**26**	**27**	**28**	**29**	**30**	**31**	**32**
Mass Flow	lb/hr	0	494,829	459,181	53,126	333,025	48,804	24,226	6,169
Temperature	°F	121	121	257	258	259	258	259	379
Pressure	psia	130	130	54	270	977	270	977	260
Stream No.	**Units**	**33**	**34**	**35**	**36**	**37**	**38**		
Mass Flow	lb/hr	6,169	0	0	1,300	2,600	2,769,376		
Temperature	°F	126	538	387	387	188	171		
Pressure	psia	250	949	213	213	1.61	14.68		

Contra Costa Generating Station

Heat and Mass Balance Data

Case 01C

Stream No.	Units	1	2	3	4	5	6	7	8
Mass Flow	lb/hr	4,069,532	0	4,069,532	92,943	92,943	4,162,474	478,572	478,572
Temperature	°F	34	70	34	59	110	1,108	633	1,047
Pressure	psia	14.55	75	14.68	500	500	15.28	1,957	1,891
Stream No.	**Units**	**9**	**10**	**11**	**12**	**13**	**14**	**15**	**16**
Mass Flow	lb/hr	478,572	957,144	919,548	459,774	459,774	82,758	542,207	542,207
Temperature	°F	1,047	1,045	670	669	669	458	1,044	1,044
Pressure	psia	1,891	1,845	442	434	434	456	411	411
Stream No.	**Units**	**17**	**18**	**19**	**20**	**21**	**22**	**23**	**24**
Mass Flow	lb/hr	1,084,414	83,296	83,296	83,296	1,282,162	1,282,162	0	1,289,901
Temperature	°F	1,044	312	582	582	597	101	70	100
Pressure	psia	400	80	76	76	68	0.98	5	130
Stream No.	**Units**	**25**	**26**	**27**	**28**	**29**	**30**	**31**	**32**
Mass Flow	lb/hr	644,951	644,951	569,431	91,184	478,572	-325	0	7,776
Temperature	°F	100	100	312	313	316	313	316	455
Pressure	psia	130	130	100	563	2,014	563	2,014	553
Stream No.	**Units**	**33**	**34**	**35**	**36**	**37**	**38**		
Mass Flow	lb/hr	7,776	0	0	650	6,439	4,162,474		
Temperature	°F	119	633	458	458	101	194		
Pressure	psia	543	1,957	456	456	0.98	14.68		

Contra Costa Generating Station

Heat and Mass Balance Data

Case 01F

Stream No.	Units	1	2	3	4	5	6	7	8
Mass Flow	lb/hr	3,554,959	0	3,554,959	83,113	83,113	3,638,072	422,508	434,881
Temperature	°F	34	70	34	59	110	1,153	620	1,051
Pressure	psia	14.55	75	14.68	500	500	15.14	1,784	1,726
Stream No.	**Units**	**9**	**10**	**11**	**12**	**13**	**14**	**15**	**16**
Mass Flow	lb/hr	434,881	869,761	835,598	417,799	417,799	69,175	511,478	511,478
Temperature	°F	1,051	1,049	682	681	681	451	1,049	1,049
Pressure	psia	1,726	1,685	416	409	409	426	388	388
Stream No.	**Units**	**17**	**18**	**19**	**20**	**21**	**22**	**23**	**24**
Mass Flow	lb/hr	1,022,956	68,365	68,365	68,365	1,187,997	1,187,997	0	1,195,148
Temperature	°F	1,048	305	574	574	594	101	70	100
Pressure	psia	378	72	69	69	63	0.98	5	130
Stream No.	**Units**	**25**	**26**	**27**	**28**	**29**	**30**	**31**	**32**
Mass Flow	lb/hr	597,574	597,574	536,416	77,031	422,508	24,505	12,373	7,206
Temperature	°F	100	100	305	306	308	306	308	445
Pressure	psia	130	130	92	511	1,828	511	1,828	501
Stream No.	**Units**	**33**	**34**	**35**	**36**	**37**	**38**		
Mass Flow	lb/hr	7,206	0	0	650	5,851	3,638,072		
Temperature	°F	120	620	451	451	101	185		
Pressure	psia	491	1,784	426	426	0.98	14.68		

Contra Costa Generating Station

Heat and Mass Balance Data

Case 01E

Stream No.	Units	1	2	3	4	5	6	7	8
Mass Flow	lb/hr	2,676,715	0	2,676,715	58,175	58,175	2,734,890	326,851	351,055
Temperature	°F	34	70	34	59	110	1,213	538	1,050
Pressure	psia	14.55	75	14.68	500	500	14.94	948	913
Stream No.	**Units**	**9**	**10**	**11**	**12**	**13**	**14**	**15**	**16**
Mass Flow	lb/hr	351,055	350,815	337,035	337,035	337,035	45,471	432,070	432,070
Temperature	°F	1,050	1,049	718	718	718	386	1,049	1,049
Pressure	psia	913	900	197	195	195	211	165	165
Stream No.	**Units**	**17**	**18**	**19**	**20**	**21**	**22**	**23**	**24**
Mass Flow	lb/hr	432,070	40,449	40,449	40,449	483,938	483,938	0	487,838
Temperature	°F	1,048	256	512	512	581	101	70	104
Pressure	psia	160	33	31	31	26	0.98	5	130
Stream No.	**Units**	**25**	**26**	**27**	**28**	**29**	**30**	**31**	**32**
Mass Flow	lb/hr	0	487,838	453,896	53,277	326,851	49,564	24,204	6,506
Temperature	°F	104	104	256	257	258	257	258	378
Pressure	psia	130	130	53	268	974	268	974	258
Stream No.	**Units**	**33**	**34**	**35**	**36**	**37**	**38**		
Mass Flow	lb/hr	6,506	0	0	1,300	2,600	2,734,890		
Temperature	°F	126	538	386	386	101	160		
Pressure	psia	248	948	211	211	0.98	14.68		