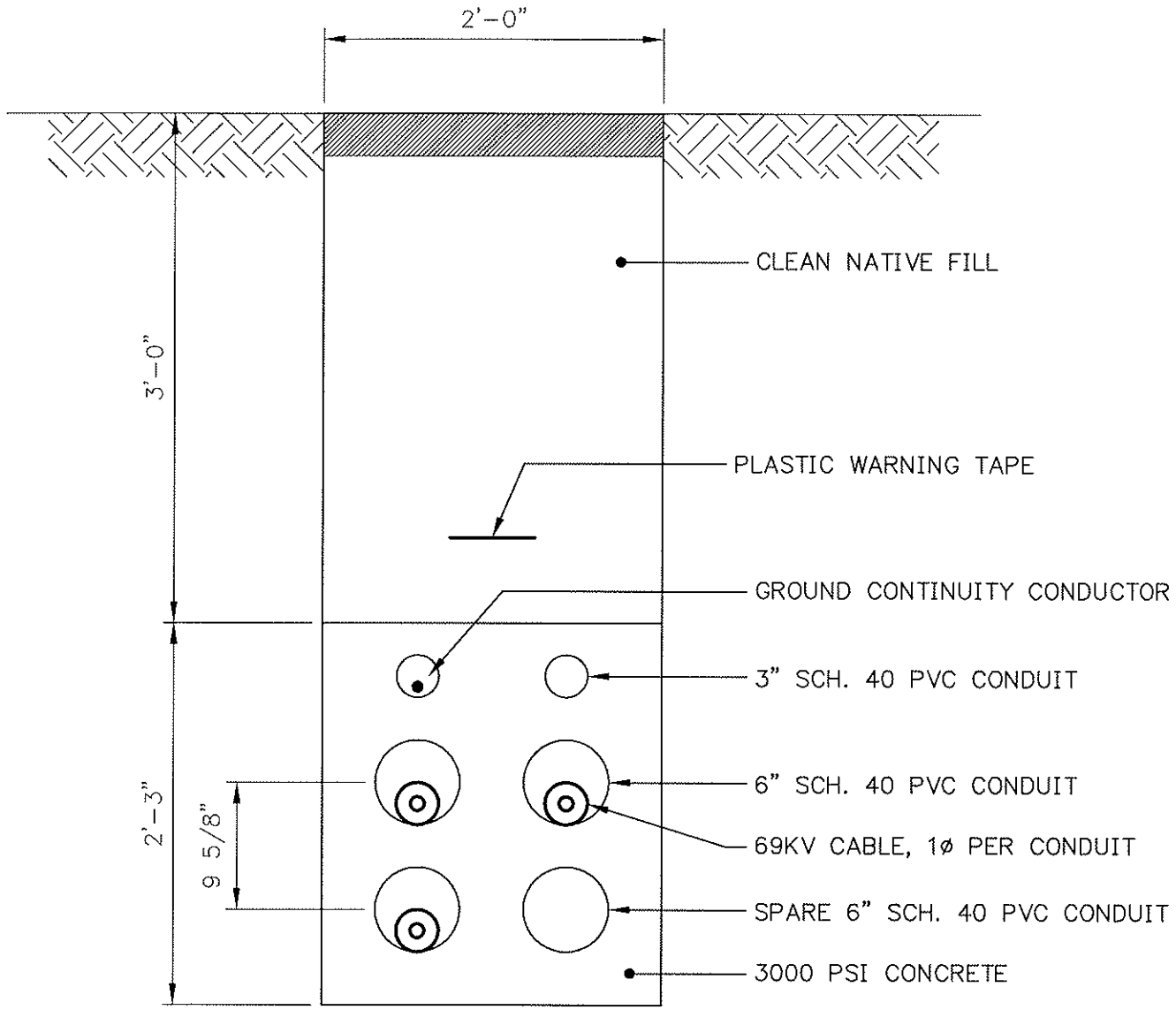

Sega
Engineers–Architects–Technicians
Design–Construction–Field Service
16041 Foster
P.O. Box 1000
Stilwell, Kansas 66085–1000

J POWER GROUP
J-POWER USA
Development Co., Ltd

ORANGE GROVE PROJECT

DWG. TITLE: TYPICAL CROSS SECTION–UNDERGROUND TRANSMISSION LINE

JOB NO. 07–0098 | DWG. NO. SKETCH–1 | REV 0

N:\2007\07098\dwgs\ee\SKETCH-1.dwg Jun 06, 2007–12:32:55 pm Rick Kohns