Appendix B

Orange Grove Single-Line Diagram

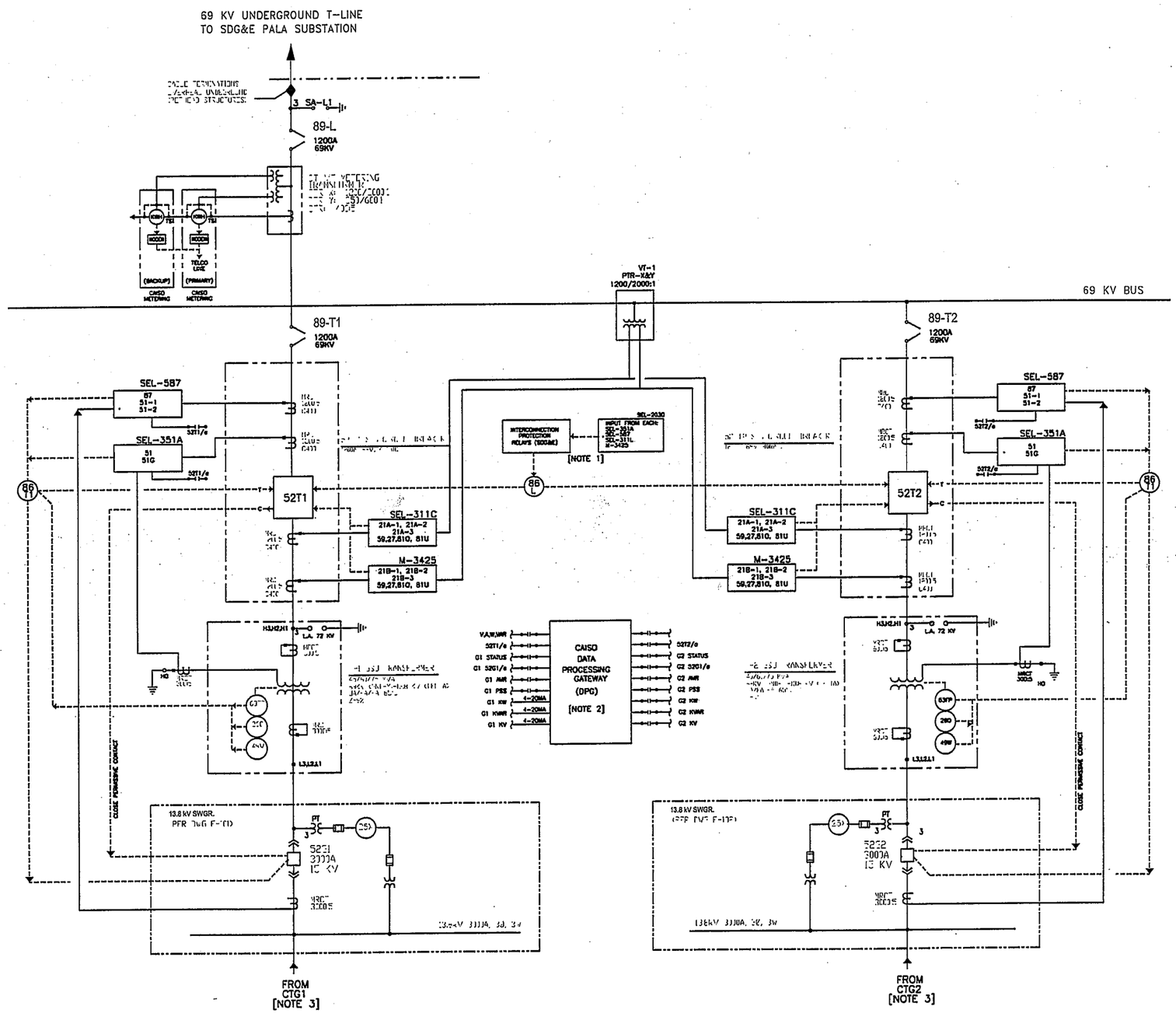

NOTES

1. INTERCONNECTION PROTECTION SYSTEM SHALL BE DEFINED BY SDG&E.
2. THE INPUTS TO DPG SHALL BE PER CAISO REQUIREMENTS.
3. DETAILS FOR 13.8 KV SWITCHGEAR AND GENERATOR PROTECTIONS ARE SHOWN ON SDGA DRAWINGS E-101 AND E-102.

REFERENCES:

E-10 69 KV SWITCHYARD LAYOUT
E-101 PLANT SINGLE-LINE-DIAGRAM
E-102 138 KV RELAYING ONE-LINE-SCHEMATIC 1
E-102 138 KV RELAYING ONE-LINE-SCHEMATIC 2

DEVICE LISTING:

21A-1 ZONE 1 IMPEDANCE
21A-2 ZONE 2 IMPEDANCE
21A-3 ZONE 3 IMPEDANCE
21B-1 ZONE 1 B. IMPEDANCE
21B-2 ZONE 2 B. IMPEDANCE
21B-3 ZONE 3 B. IMPEDANCE
25 SYNCHRONIZER (BD)
25C SYNC. CHECK (CD)
26 TRANSFORMER "G" TH TEMP TRIP
27 UNDERVOLTAGE TRIP V < 80% TYPE C 10 SEC (3-PH U-LINE)
49W TRANSFORMER WINDINGS TEMP "G" TRIP
50/51 TRANSFORMER 1A V OVERCURRENT (3-PH) (BASIC)
51-1 TRANSFORMER OVERCURRENT - DWG 1 BACKUP
51-2 TRANSFORMER OVERCURRENT - DWG 2 BACKUP
51G TRANSFORMER GROUND OVERCURRENT (1-2)
51V VOLTAGE CONTROLLED OVERCURRENT (3-PH)
52 CIRCUIT BREAKER
59 OVERVOLTAGE TRIP V > 110% TYPE C 10 SEC (1-PH OR 3-PH)
63FP TRANSFORMER FAULT-SUDDEN PRESSURE RELAY
81U OVERFREQUENCY
81U UNDERFREQUENCY
86 LOCKOUT
87 TRANSFORMER DIFFERENTIAL (3-PH)

AVR AUTOMATIC VOLTAGE REGULATOR
PSS POWER SYSTEM STABILIZER

PRELIMINARY

REV	DATE	BY	SUB	APP	DESCRIPTION
A	11/26/07	AKT	AT		75% REVIEW

REV	DATE	BY	SUB	APP	DESCRIPTION

DESIGNED BY
DRAWN BY
CHECKED BY
IN CHARGE
DATE

WestPower
Power Generation & Distribution Engineering
2930 Domingo Ave, Suite 101, Berkeley, CA 94705
Phone : (510) 351-5566 Fax : (510) 848-0505

ORANGE GROVE POWER PLANT
69 KV SWITCHYARD
SINGLE-LINE-DIAGRAM

CADD FILE NO	CADD DATE
ORG-E-1	11/26/07
SCALE: AS NOTED	
CONTRACT NUMBER	ACTIVITY CODE
DWG NO. ORG-E-1	REV A / PAGE NO