Appendix F

Power Flow Plots

Power Flow Plot #	Description
01	2008 Heavy Summer FY Pre-Project: Ash – Ash Tap – Valley Center – Felicita 69 kV TL681 Outage (MVA/%) Non-Coincident Peak Loads @ Rincon and Valley Center Substations No Overload on Rincon – Lilac, TL 683
02	2008 Heavy Summer FY Post-Project: Ash – Ash Tap – Valley Center – Felicita 69 kV TL681 Outage (MVA/%) Non-Coincident Peak Loads @ Rincon and Valley Center Substations Overload on Rincon – Lilac, TL 683

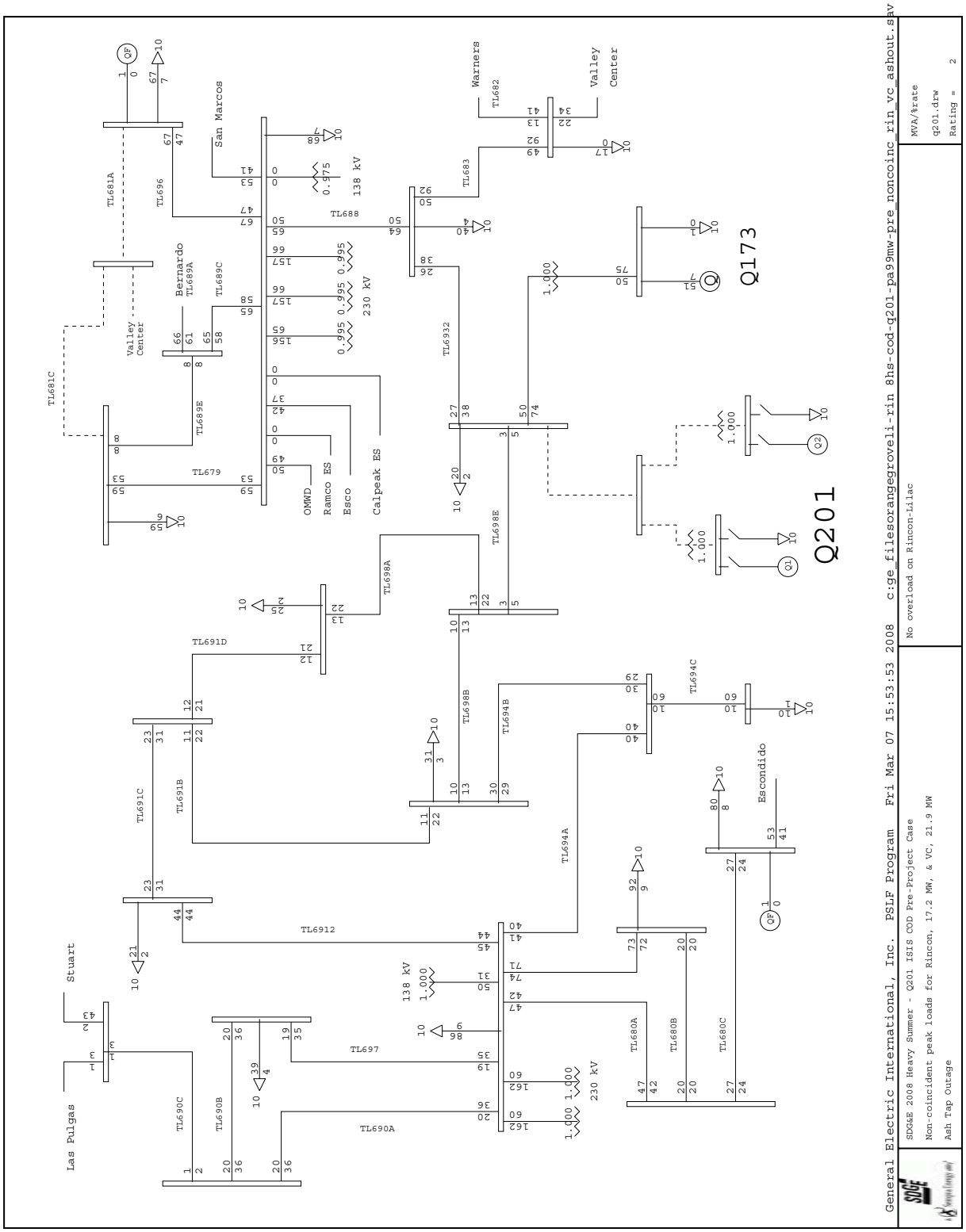
General Electric International, Inc. PSLF Program Fri Mar 07 15:53:53 2008 c:ge_filesorangegroveli-rin 8hs-cod-q201-pa99mw-pre_noncoinc_rin_vc_ashout.sav
SDG&E 2008 Heavy Summer - Q201 ISIS COD Pre-Project Case
Non-coincident peak loads for Rincon, 17.2 MW, & VC, 21.9 MW
Ash Tap Outage
No overload on Rincon-Lilac
MVA/%rate
q201.drw
Rating = 2
Q201
Q173
138 kV
230 kV
San Marcos
Warners
Valley Center
Bernardo
Escondido
Stuart
Las Pulgas
OMWD
Ramco ES
Esco
Calpeak ES
TL681A
TL681C
TL696
TL689A
TL689C
TL689E
TL688
TL679
TL682
TL683
TL6932
TL698A
TL698B
TL698E
TL691D
TL691C
TL691B
TL694A
TL694B
TL694C
TL6912
TL697
TL690A
TL690B
TL690C
TL680A
TL680B
TL680C

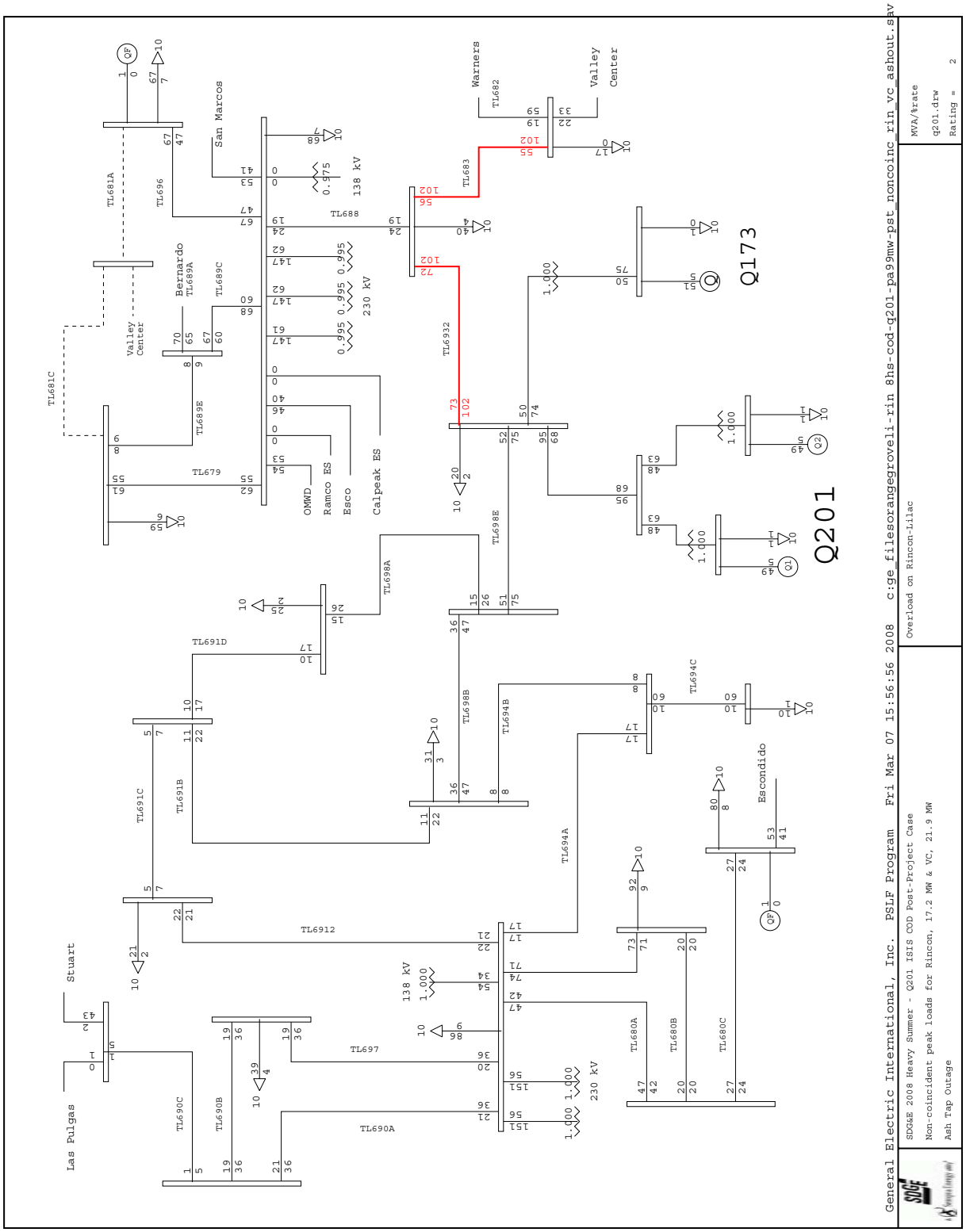
General Electric International, Inc. PSLF Program Fri Mar 07 15:56:56 2008 c:ge_filesorangegroveli-rin 8hs-cod-q201-pa99mw-pst_noncoinc_rin_vc_ashout.sav
SDG&E 2008 Heavy Summer - Q201 ISIS COD Post-Project Case
Non-coincident peak loads for Rincon, 17.2 MW & VC, 21.9 MW
Ash Tap Outage
MVA/%rate
q201.drw
Rating = 2
Overload on Rincon-Lilac
Q201
Q173
138 kV
230 kV
San Marcos
Warners
Valley Center
Bernardo
Escondido
Stuart
Las Pulgas
OMWD
Ramco ES
Esco
Calpeak ES
TL681A
TL681C
TL696
TL688
TL689A
TL689C
TL689E
TL679
TL682
TL683
TL6932
TL698A
TL698E
TL691D
TL691C
TL691B
TL698B
TL694B
TL694C
TL694A
TL6912
TL697
TL690C
TL690B
TL690A
TL680A
TL680B
TL680C