APPENDIX 3-C CONDUCTOR CABLE SPEC SHEET

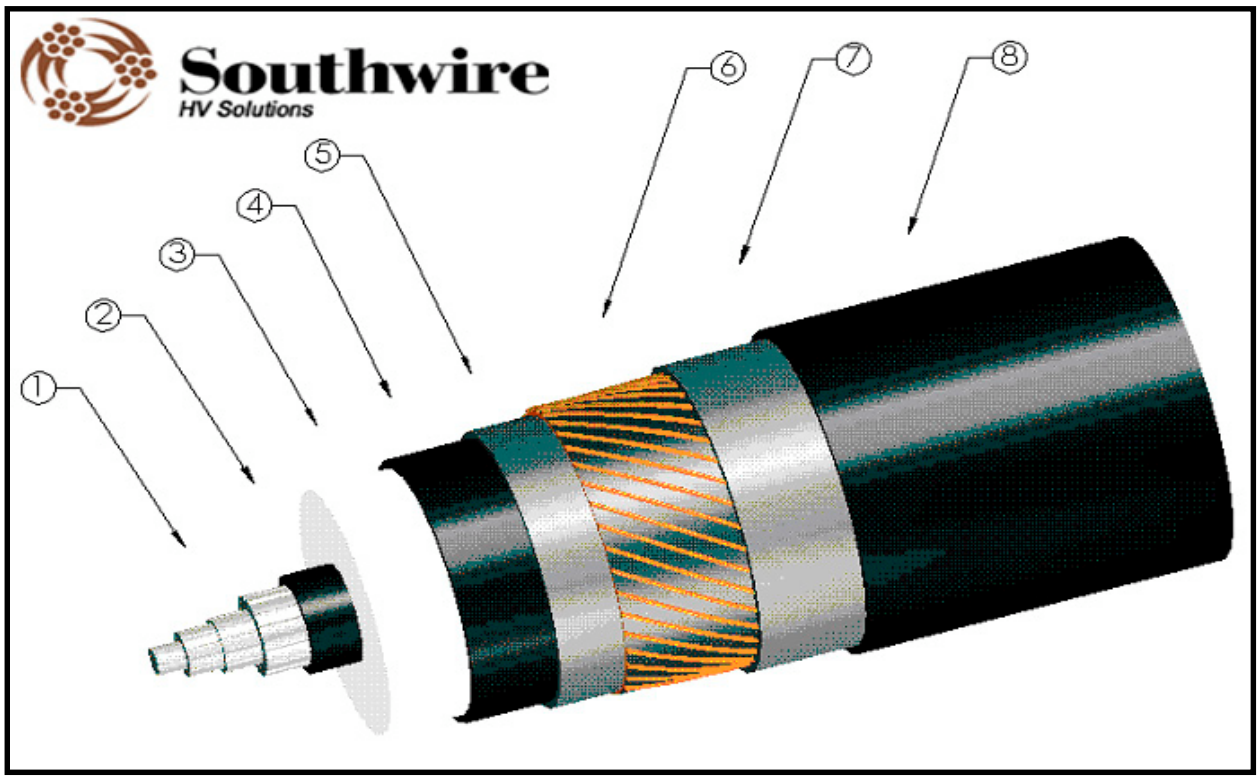

High Voltage Solid Dielectric Cable
69 kV — Aluminum conductor with concentric Copper wires

Component	Description	Material	Thickness (mils)	Diameter (in.)
1	Reverse concentric stranded compressed Conductor 1750 91 Strand kcmil — 91	Aluminum	n / a	1.48
2	Conductor Shield	SC-XLPE	40	1.57
3	Super Clean XLPE Insulation	XLPE	650	2.87
4	Insulation Shield	SC-XLPE	70	3.01
5	Water-Swellable Semi-Conductive Tape	Polyester non-woven Fabric	79	3.09
6	42 × AWG 14 Concentric Wires	Copper	64	3.22
7	Water-Swellable Non-Conductive Tape	Polyester non-woven Fabric	13	3.25
8	Jacket	LLDPE	130	3.51
8	Semi-Conductive Jacket Layer	SC-PE	10	3.53
Approximate Finished Cable Weight = 5.1 pounds per foot				

Note: Drawing not to scale. Values for tendering purposes only.
Values in manufacturing specification may vary.

All information contained in or disclosed by this document is considered confidential and proprietary by Southwire HV Solutions of Carrollton, GA USA. Except for the rights expressly granted in writing by Southwire HV Solutions, all design, manufacturing, use, reproduction, sales and other rights in such information are reserved by Southwire HV Solutions.

Dwg. No: 69690699-XS01		**Customer:**
Date: 2007 - 10 - 12	**Rev. 0**	**Prepared by: CCS**

Southwire
HV Solutions

Cable Characteristics

File Number:	69690699	**Voltage:**	69 kV
Customer:	0	**Standard:**	AEIC CS9-06
Drawing:	. No: 69690699-XS01	**Cable Type:**	1750 91 Strand kcmil Al 650 mils XLPE 42 × AWG 14 Cu CN PE
Prepared by:	CCS	**Date:**	10/12/2007
		Revision:	0

Operating Voltage Stresses	Voltages = ø-ø: 69 kV; ø-g: 40 kV; BIL: 350 kV	
	C. Shield = 84.1 V / mil	3.31 kV / mm.
	Average = 61.29 V / mil	2.41 kV / mm.
	I. Shield = 46.03 V / mil	1.81 kV / mm.

Insulation Expansion	90 °C = 39 mils	(1.3 %)	1 mm.
	105 °C = 66 mils	(2.2 %)	1.68 mm.

Conductor Resistance	R dc 20 °C = 0.00991 Ohms / 1000 ft.	0.03251 Ohms / km.
	R dc 90 °C = 0.01216 Ohms / 1000 ft.	0.0399 Ohms / km.
	R ac 90 °C = 0.01308 Ohms / 1000 ft.	0.04292 Ohms / km.

Concentric Sheath Resistance	R dc 20 °C = 0.0601 Ohms / 1000 ft.	0.1972 Ohms / km.
	R dc 75 °C = 0.07311 Ohms / 1000 ft.	0.23986 Ohms / km.
	R ac 75 °C = 0.07457 Ohms / 1000 ft.	0.24465 Ohms / km.
	ac resistance calculated on 2% linear increase basis	

Capacitance, Inductance, Surge Impedance	C = 64.6246 pF / ft. (nF / 1000 ft.)	0.21202 nF / m. (µF / km.)
	L = 0.21353 µH / ft. (mH / 1000 ft.)	0.70056 µH / m. (mH / km.)
	Z S = 57 Ohms **Configuration: FALSE**	
	XLPE loss factor = 0.0005, relative permittivity = 2.3	

Charging Current, Shunt Reactance, Dielectric Loss	I C = 0.97 Amps / 1000 ft.	3.184 Amps /km.
	X C = 41050 Ohms / 1000 ft.	12512 Ohms / km.
	W D = 0.019 W / ft.	0.063 W / m.

Operating, Fault Sheath Voltage Rise	SVR = #N/A		#N/A
	L = 0 ft.		0 m.
	SVR = #N/A	Fault SVR =	#N/A
	SVR calculated at Amps		

Concentric neutral short circuit current capacity

File Number:	69690699	Voltage:	69 kV
Customer:	0	Standard:	AEIC CS9-06
Drawing:	. No: 69690699-XS01	Cable Type:	1750 91 Strand kcmil Al 650 mils XLPE 42 × AWG 14 Cu CN PE
Prepared by:	CCS	Date:	10/12/2007
		Revision:	0

Concentric neutral short circuit current carrying capacity to IEC 949

Cross section:	87 mm²	Specified short circuit current:	30 kA
Neutral metal:	copper	Duration:	0.5 second
Initial temperature:	75 °C	Final temperature:	200 °C
K (mat. constant):	226 $As^{0.5}/mm^2$	Beta (rec.of coeff.):	234.5 K

Maximum permissible short circuit current for 0.5 second is 16.3 kA.

Concentric Neutral

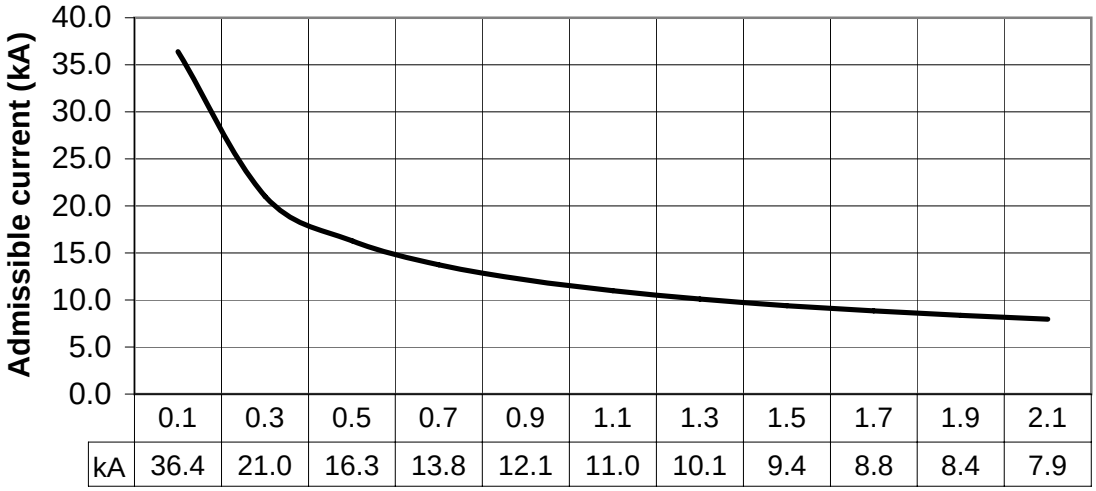

	0.1	0.3	0.5	0.7	0.9	1.1	1.3	1.5	1.7	1.9	2.1
kA	36.4	21.0	16.3	13.8	12.1	11.0	10.1	9.4	8.8	8.4	7.9

Duration (s)

Conductor short circuit current capacity

File Number:	69690699	Voltage:	69 kV
Customer:	0	Standard:	AEIC CS9-06
Drawing:	. No: 69690699-XS01	Cable Type:	1750 91 Strand kcmil Al 650 mils XLPE 42 × AWG 14 Cu CN PE
Prepared by:	CCS	Date:	10/12/2007
		Revision:	0

Conductor short circuit current carrying capacity to IEC 949

Cross section:	887 mm²	Specified short circuit current:	30 kA
Conductor metal:	Aluminum	Duration:	0.5 second
Initial temperature:	90 °C	Final temperature:	250 °C
K (mat. constant):	148 $As^{0.5}/mm^2$	Beta (rec.of coeff.):	228 K

Maximum permissible short circuit current for 0.5 second is 118.5 kA.

Conductor

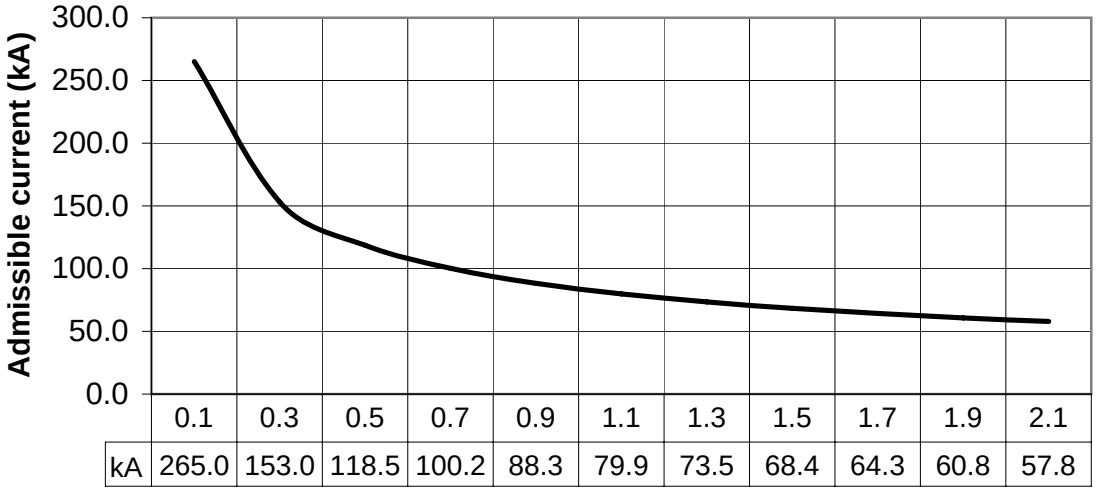

	0.1	0.3	0.5	0.7	0.9	1.1	1.3	1.5	1.7	1.9	2.1
kA	265.0	153.0	118.5	100.2	88.3	79.9	73.5	68.4	64.3	60.8	57.8

Duration (s)