APPENDIX 6.2-F- SPECIFICATIONS FOR BLACK START ENGINE

CUMMINS CAL PACIFIC LLC.
1939 Deere Avenue
Irvine, CA 92606 United States
(949) 253-6000

July 12, 2007

Industrial Construction Company
0
Cleveland OH
Phone No.: 440-746-9200 x134
Fax No. :
Email : hkern@icconstruction.com
Attention: Hans Kern

Project Name: **Pala Black Start**
Quotation No: **TG39275.448**

Thank you for your inquiry, We are pleased to quote as follows:

Qty.	Notes	Model/Options	Description
ITEM A			
1	a	625GTA38GS2	NATURAL GAS GENSET
	a	L032	Rating - 60 Hertz,625KW Standby Power, 8.5:1 C/R
	a	308B	Voltage - 277/480, 139/240, 125°C Rise.....
	a	0	Exciter/Regulator - PMG, 1 Phase Sensor.....
	a	A292	Heater-Alternator, 120 Volt AC.....
	a	A275	Isochronous/Droop.....
	a	KP89	Circuit Breaker 1000A, 3 Pole, 600V, Thermo-Magnetic, UL.....
	a	H643	Engine Control-PCC 2100.....
	a	H527	Warning-Low Coolant Level.....
	a	H606	AC Control-with Meters.....
	a	E074	Engine Cooling - Radiator.....
	a	D041	Engine Air Cleaner - Normal Duty.....
	a	C002	Natural Gas Fuel.....
	a	(2) MM-2	Flexible Fuel Connector.....
	a	(2) SO1044	Fuel Strainer.....
	a	H426	Coolant Heater 8000W 480V/240……
	a	L029	Warranty - 2 Year Standby.....
	b	CN-2-6	Vibration Isolators - Gen Set (Price of 10).....
	a	1400-Dry	Battery - 12 Volt DC (Group 8D) (Price of 4).....
	a	Lube oil	Lube Oil.....
	a	Anti-Freeze	Anti-Freeze - 50/50.....
	b	Enclosure	Sound Attenuated Enclosure 42 dBA @ 400'
	e	S&T	Basic Start and Test
	d	NSCR	Three Way Catalytic Convertor and AFRC (shipped Loose)
	b	Battery Charger	Battery Charger

Option Notes:

a : Factory Assembled.
b : Assemble at CCP's facility.
c : Shipped loose Items. Assemble/Install by CCP at job site.
d : Shipped loose Items. Assemble/Install by customer at job site.
e : Start & Test perform by CCP.
f : Start & Test perform by customer.

Availability: Subject to manufacturer lead time.
Currently, manufacturing lead time is approximately 26 weeks from order acceptance

Clarifications and Exceptions:

This quote is based on our understanding of your verbal specifications, which are documented by our submittal package and by the above quotation. These specifications may or may not meet all jobsite requirements. Any additions or deletions that result from a project requirement that are not included in the Cummins Cal Pacific submittals or in the above quotation will be addressed by separate change order to be supplied by Cummins Cal Pacific and authorized by Purchaser prior to any changes being implemented

Air Pollution Control Permit:
This product is designed to meet the stringent air quality control standards of California Air Pollution Districts. However, these districts can and do change requirements from time to time.
Please note that permits to use this generator are the responsibility of the Purchaser, however, Cummins Cal Pacific can provide the following data in support of air quality procedures by the district noted below.

San Diego County Air Pollution Control District Permit
All engines installed over 50 horsepower require registration with the SDAPCD. The engine utilized in the generator proposed is current product and should be adequate for SDAPCD Permits to Construct issued before the end of 2007 at which time gensets 60 kW and under will require lower emissions. For permits issued beyond this date for this size product, a more advanced engine technology may be needed. If you would like a quotation which includes this new lower emission product, please let us know.

The California Air Resources Board (CARB), and the San Diego Air Pollution Control District (SDAPCD) have recently implemented new regulations in order to help control diesel particulate emissions. These regulations require that each generator installation be subject to various screening processes, by which the Air Pollution Control District will determine allowable emissions limits for that specific location. Based on the results of these screening processes, additional emissions control equipment, such as a diesel particulate filter, may be required. Most generator installations will not require any additional equipment, but as the supplier of a diesel generator, we have no way of knowing what the requirements will be, prior to the screenings being done. Therefore, we have not included, nor can we be accountable for additional equipment requirements resulting from these screenings.

If the specifics of add-on emissions control have been determined, please provide this detail, and we will provide a quote accordingly.

Permits and licenses: Permit and license costs (Air Pollution/Quality, Fire, Building, etc.) are not included in this quote. Cummins Cal Pacific, LLC. will provide information as may be necessary for the acquisition of permits and licenses, but Cummins Cal Pacific, LLC. does not assume any responsibility for obtaining any permits or licenses that may be required.

Shipment: This price is F.O.B. jobsite on truck curbside. Offloading and placement of the goods shall be solely your responsibility. All deliveries are Monday through Friday 6:00 a.m. to 5:00 p.m. (Deliveries outside normal business hours will be invoiced as necessary). All items shipped to site are the responsibility of the Purchaser, whether or not installed by Cummins Cal Pacific or by Purchaser.

Start & Test: Upon completion of installation by others, Start & Test will be performed per the Start & Test Scope of Work, which is a part of this quotation as described below:

The Scope of this test is as follows:

1) Confirm Product Under Test has been supplied to agreed Cummins Cal Pacific quotation.
2) Confirm proper installation of the Items Under Test and make recommended changes as appropriate.
3) Conduct Operational Tests to confirm control logic, load acceptance and steady state operation of Product Under Test.
4) Product Under Test will be loaded using available facility load.
5) It is assumed that training will be done at the time of the start & test. If additional sessions are necessary, we will be glad to quote this training at an additional cost.

Venting: Tank venting (indoor/outdoor), as may be required and (if not included above), is not included.
If the specifics of venting have been determined, please provide this detail, and we will quote accordingly.

Warranties: Product warranties are being supplied with this equipment from Cummins Power Generation and are described on CPG Bulletin # AB2001-01 12/2002. No other warranties are supplied beyond this warranty.

Not a Contractor: CUMMINS CAL PACIFIC, LLC. is a supplier of materials and related services; Cummins Cal Pacific, LLC. is not a contractor.

Invoicing: All invoices will be for product delivered and service provided. Partial invoicing will reflect percent of completion. Cummins Cal Pacific does not agree to the witholding of retention.

Credit: Credit is subject to Cummins Cal Pacific, LLC.'s approval in its sole discretion. This quote in no way constitutes approval of credit.

Terms and Conditions:

1. Payment terms are net 30 Days, subject to all of the Credit Terms contained in our Credit Application and this document. (1 ½% per month will be charged on past due accounts).
2. Partial shipments will be invoiced proportional to total quoted price, payable 30 days after shipment. Note: If your job conditions or schedule result in partial or incomplete shipment of products and equipment provided by Cummins Cal Pacific, LLC., you will be invoiced according to the dollar value of the shipped items. These invoices then become due and payable 30 days after shipment and not when the job is completed.
3. All purchase orders must reference our quotation.
4. All purchase orders must be acknowledged in writing by Cummins Cal Pacific, LLC. to be deemed accepted.
5. Purchase orders which are issued with a hold for release date are subject to re-evaluation at the time of release.
6. Unless mutually agreed upon in writing, Cummins Cal Pacific, LLC will not accept purchase orders which:
   a) specify delivery dates that are not subject to manufacturer's leadtimes.
   b) contain penalty clauses or liquidated damage clauses.
   c) require Cummins Cal Pacific, LLC. to indemnify and hold harmless the purchaser, unless the purchaser also agrees to indemnify and hold harmless Cummins Cal Pacific, LLC.
   d) require Cummins Cal Pacific, LLC. to pay any and all legal expenses for the purchaser in the event of a dispute.
   e) require Cummins Cal Pacific, LLC. to be responsible for system design work and/or guarantee that a performance standard for a system will be met.
   f) require completion and acceptance of the project by the owner before payment.
7. Start and Test may be invoiced separately at your request but it is subject to Cummins Cal Pacific, LLC.'s partial invoicing policy.
8. Provided CCP is ready for shipment and the purchaser can't take delivery, monthly storage fees at a rate of .5% of P.O value will be issued for material not accepted on the requested delivery date.
9. Notwithstanding anything in this agreement or under law, buyer and seller agree that seller's only liability for any breach of this agreement (or any defect in any item of property sold by seller) shall be limited to the replacement of the defective part or replacement of the defective product ; and buyer shall have no other right, claim or remedy against seller, including, but not limited to any right to recover consequential damages under any circumstance.

Validity of the Quote: This quote is valid for 30 days following the quote date. This quote may be modified and/or rescinded by Cummins Cal Pacific, LLC. at its sole discretion unless and until accepted on or before the quote date.

Note: The Terms and conditions of this quotation govern over any conflict between this quotation and customer's purchase order or other document, made either prior or subsequent to this quotation.

Thank you for this opportunity to quote Cummins Power Generation products. Please call if we may answer any, questions or be of further service.

Submitted by
Cummins Cal Pacific, LLC.

Tom S Golnick
Account Manager
Direct Cell: 619-778-1402
Office Phone: 949-253-6000
Fax: 760-941-4586
Email: tom.g.golnick@cummins.com

Accepted By:_____

Print Name:_____

Firm Name:_____

Customer P.O.:_____ Date:_____

Delivery Date Requested
by Purchaser _____

Note: If no delivery date is provided, Cummins Cal Pacific will hold placing material orders until such date is made available. It is the responsibility of Purchaser to supply a delivery date that is within factory lead times.

Gaseous Fuel Generator Set Model GFJB

KW(KVA) @ 0.8 P.F.						
Compression	60 HZ-1800 RPM			50 HZ-1500 RPM		
Ratio	Standby	Prime	Cont.	Standby	Prime	Cont
8.5:1	625(781)	565(706)	470(587)	515(643)	465(581)	385(481)

Notes:
(1) 21° C (90° F) or lower water temperature to the aftercooler or use of air to air aftercooler w/100ºF or lower air temperature to the radiator.
(2) 54° C (130° F) or lower water temperature to the aftercooler or use of air to air aftercooler w/130°F or lower air temperature to the radiator.

Fuel Application Guide	
Compression Ratio	8.5:1
Dry Processed Natural Gas	Yes
Propane (HD5)	Yes
All gases such as field gas, digester and sewage gas will require an analysis of the specified gas and pre-approval from CNGE. Consult your Cummins Distributor for details.	

Description

The Cummins NPower GF-series commercial generator set is a fully integrated power generation system providing optimum performance, reliability, and versatility for stationary standby or prime power applications.

A primary feature of the GF GenSet is strong motor-starting capability and fast recovery from transient load changes. The torque-matched system includes a heavy-duty Cummins 4-cycle spark ignited engine, an AC alternator with high motor-starting kVA capacity, and an electronic voltage regulator with three phase sensing for precise regulation under steady-state or transient loads. The GF GenSet accepts 100% of the nameplate standby rating in one step. *

The standard PowerCommand® digital electronic control is an integrated system that combines engine and alternator controls for high reliability and optimum GenSet performance.

Optional weather-protective housings and coolant heaters shield the generator set from extreme operating conditions. Environmental concerns are addressed by low exhaust emission engines, sound-attenuated housings, and exhaust silencers. A wide range of options, accessories, and services are available, allowing configuration to your specific power generation needs.

Every production unit is factory tested at rated load and power factor. This testing includes demonstration of rated power and single-step rated load pickup. Cummins NPower manufacturing facilities include quality standards, emphasizing our commitment to high quality in the design, manufacture, and support of our products. The generator is CSA certified. The PowerCommand control is UL508 Listed.

All Cummins NPower generator sets are backed by a comprehensive warranty program and supported by a worldwide network of 170 distributors and service branches to assist with warranty, service, parts, and planned maintenance support.

Features

Cummins Heavy-Duty Engine - Rugged 4-cycle industrial spark ignited engine delivers reliable power, low emissions, and fast response to load changes.

Alternator - Several alternator sizes offer selectable motor-starting capability with low reactance 2/3 pitch windings, low waveform distortion with non-linear loads, fault-clearing short-circuit capability, and class H insulation. The alternator electrical insulation system is UL1446 Recognized.

Control Systems - The PowerCommand electronic control is standard equipment and provides total genset system integration, including automatic remote starting/stopping, precise voltage regulation, alarm and status message display, AmpSentry™ protection, output metering, auto-shutdown at fault detection, and NFPA 110 compliance. PowerCommand control is Listed to UL508.

Cooling System - Standard cooling package provides reliable running at the rated power level, at up to 40°C ambient temperature.

Housings - Optional weather-protective housings are available.

Certifications - Generators are designed, manufactured, tested, and certified to relevant UL, NFPA, ISO, IEC, and CSA standards.

Warranty and Service - Backed by a comprehensive warranty and worldwide distributor service network.

*Adequate fuel pressure and volume must be provided. Engines must be equipped with a functioning jacket water heater.

Generator Set

The general specifications provide representative configuration details. Consult the outline drawing for installation design.

Specifications – General

See outline drawing 7209 -02B for installation design specifications. (Drawing# 7211-01C – for enclosed units)

Unit Width, in (mm)	90.5" (2299)
Unit Height, in (mm)	111" (2819)
Unit Length, in (mm)	186.5" (4737)
Unit Dry Weight, lb (kg)	18119 (8218)
Rated Speed, rpm	1800
Voltage Regulation, No Load to Full Load	±1.0%
Random Voltage Variation	±1.0%
Frequency Regulation	5%
Random Frequency Variation	±0.5%
Radio Frequency Interference	Optional PMG excitation operates in compliance with BS800 and VDE level G and N. Addition of RFI protection kit allows operation per MIL-STD-461 and VDE level K.

Rating Definitions

Standby Rating based on: Applicable for supplying emergency power for the duration of normal power interruption. No sustained overload capability is available for this rating. (Equivalent to Fuel Stop Power in accordance with ISO3046, AS2789, DIN6271 and BS5514). Nominally rated.

Prime (Unlimited Running Time) Rating based on: Applicable for supplying power in lieu of commercially purchased power. Prime power is the maximum power available at a variable load for an unlimited number of hours. A 10% overload capability is available for limited time. (Equivalent to Prime Power in accordance with ISO8528 and Overload Power in accordance with ISO3046, AS2789, DIN6271, and BS5514). This rating is not applicable to all generator set models.

Base Load (Continuous) Rating based on: Applicable for supplying power continuously to a constant load up to the full output rating for unlimited hours. No sustained overload capability is available for this rating. Consult authorized distributor for rating. (Equivalent to Continuous Power in accordance with ISO8528, ISO3046, AS2789, DIN6271, and BS5514). This rating is not applicable to all generator set models.

Site Derating Factors

Engine power available up to 3000' (m) at ambient temperatures up to 104°F (40°C). Above 3000' (m)derate at 4% per 1000 ft (305 m), and 1% per 10°F (2% per 11°C) above 104°F (40°C).

1) Data represents gross engine performance capabilities obtained and corrected in accordance with SAEJ1349 conditions of 29.61 in. Hg.(100KPa) barometric pressure [300 ft. (91m) altitude], 77°F (25°C) inlet air temperature, and 0.30 in Hg.(100KPa) water vapor pressure using dry processed natural gas fuel with 905 BTU per standard cubic foot (33.72 ki/l) lower heating value. Deration may be required due to altitude, temperature or type of fuel. Consult your local Cummins Distributor for details.

2) FUEL SYSTEM

Standard Carburetor – IMPCO Make

Low Pressure Dry Processed Natural Gas – (905 BTU/ft.² L.H.V.)

Running Pressure to Carburetor (After Regulation) – in. H_20 (mm H_20) …… 5 ~ 7 (127~177)

Running Pressure to Engine Mounted Regulator ~ in. H_20 (mm H_20) ……10 ~ 20 (254 ~ 508)

Minimum Gas Supply Pipe Size @ Engine – in. (mm)……2.0 (50.8)

Gas Supply Filter Pressure Rating – PSI (kPa)……100 (690)

The preceding pipe sizes are only suggestions and piping may vary with temperatures, distance from fuel supply and application of local codes. Gas must be available at adequate volume and pressure for engine at the regulator.

Engine

Cummins heavy-duty spark ignited engines use advanced combustion technology for reliable and stable power, low emissions, and fast response to sudden load changes.

Electronic governing is standard for applications requiring constant (isochronous) frequency regulation such as Uninterruptible Power Supply (UPS) systems, non-linear loads, or sensitive electronic loads. Optional coolant heaters are recommended for all emergency standby installations or for any application requiring fast load acceptance after start-up.

Specifications – Engine

Base Engine	Cummins Model GTA38G2
Displacement in^3 (L)	2300 (38)
Overspeed Limit, rpm	2100
Regenerative Power, kW	-
Cylinder Block Configuration	Cast iron with replacable wet cylinder liners
Cranking Current	550 amps at ambient temperature of 32°F (0°C)
Battery Charging Alternator	37 amps
Starting Voltage	24-volt, negative ground
Lube Oil Filter Types	Single spin-on canister-combination full flow with bypass
Standard Cooling System	104°F (40°C) ambient radiator

Fuel		**STANDBY**		
Fuel Consumption	Load	1/2	3/4	Full
(Approximate)	kW	312	469	625
	CFH	5605	7484	8268
Cooling				
Heat Rejection to Coolant*		38660 Btu/Min	679 kw	
Heat Rejection to Room		6107 Btu/Min	107kw	
Coolant Capacity (with radiator)		120 US/Gal	454L	
Coolant Flow Rate		411 Gal/Min	26 L/Min	
Maximum Coolant Friction Head		15 psi	103kPa	
Maximum Coolant Static Head		60 ft	18.3 m	
Radiator Fan Load		90 HP	67 kw	
Air				
Combustion Air		2257 cfm		
Maximum Air Cleaner Restriction		15" in H_20	381 mmHg	
Allternator Cooling Air		2060 cfm	58.3 cu m/min	
Radiator Cooling Air		71000cfm	33512 L/sec	
Maximum Restriction at Radiator Discharge (static)		0.5 in H_20	12.7 mm H_20	
Exhaust				
Gas Flow (Full Load)		6119 cfm	2888 L/sec	
Gas Temperature		1350°F	732 °C	
Maximum Back Pressure		2 in Hg	50 mm Hg	
Engine				
Gross Engine Power Output		965 bhp	720 kwm	
BMEP		185 psi	1276 kPa	
Piston Speed		1875 ft/min	9.5 m/s	

* Jacket water only. Contact factory for aftercooler heat rejections and coolant flows

Alternator

Several alternators are available for application flexibility based on the required motor-starting kVA and other requirements. Larger alternator sizes have lower temperature rise for longer life of the alternator insulation system. In addition, larger alternator sizes can provide a cost-effective use of engine power in across-the-line motor-starting applications and can be used to minimize voltage waveform distortion caused by non-linear loads.

Single-bearing alternators couple directly to the engine flywheel with flexible discs for drivetrain reliability and durability. No gear reducers or speed changers are used. Two-thirds pitch windings eliminate third-order harmonic content of the AC voltage waveform and provide the standardization desired for paralleling of generator sets. The standard excitation system is a self (shunt) excited system with the voltage regulator powered directly from the generator set output.

Alternator Application Notes

Separately Excited Permanent Magnet Generator (PMG) System - This option uses an integral PMG to supply power to the voltage regulator. A PMG system generally has better motor-starting performance, lower voltage dip upon load application, and better immunity from problems with harmonics in the main alternator output induced by non-linear loads. This option is recommended for use in applications that have large transient loads, sensitive electronic loads (especially UPS applications), harmonic content, or that require sustained short-circuit current (sustained 3-phase short circuit current at approximately 3 times rated for 10 seconds).

Alternator Sizes - On any given model, various alternator sizes are available to meet individual application needs. Alternator sizes are differentiated by maximum winding temperature rise, at the generator set standby or prime rating, when operated in a 40°C ambient environment. Available temperature rises range from 80°C to 150°C. Not all temperature rise selections are available on all models. Lower temperature rise is accomplished using larger alternators at lower current density. Lower temperature rise alternators have higher motor-starting kVA, lower voltage dip upon load application, and they are generally recommended to limit voltage distortion and heating due to harmonics induced by non-linear loads.

Alternator Space Heater - is recommended to inhibit condensation.

Available Output Voltages

Three Phase Reconnectable	Single Phase Non-Reconnectable	Three Phase Non-Reconnectable
[ ] 120/208	[ ] 120/240	[ ] 220/380
[ ] 127/220		[ ] 347/600
[ ] 139/240		
[ ] 120/240		
[ ] 240/416		
[ ] 254/440		
[ ] 277/480		

Specifications – Alternator

Design	Brushless, 4-pole, drip-proof revolving field
Stator	2/3 pitch
Rotor	Direct-coupled by flexible disc
Insulation System	Class H per NEMA MG1-1.65
Standard Temperature Rise	125°C standby
Exciter Type	PMG
Phase Rotation	A (U), B (V), C (W)
Alternator Cooling	Direct-drive centrifugal blower
AC Waveform Total Harmonic Distortion	<5% total no load to full linear load <3% for any single harmonic
Telephone Influence Factor (TIF)	<50 per NEMA MG1-22.43.
Telephone Harmonic Factor (THF)	<3

	80°C Alternator			**105°CAlternator**			**125°C Alternator**			
Voltage Ranges The broad range alternator can supply single phase output up to 2/3 of the set rated 3-phase KW at 1.0 power factor	110/190 thru 139/240 220/380 Thru 277/480 120/240*		347/600	110/190 thru 139/240 220/380 Thru 277/480 120/240		347/600	110/190 Thru 139/240 220/380 Thru 277/480 120/240*	120/208 Thru 139/240 240/416 Thru 277/480 120/240*	247/480	347/600
Motor Starting Maximum kVA (90% Sustained Voltage)	Broad Range 3866		600 V --	Broad Range 2944		600V --	Broad Range 2944	480V 2429	600V ---	
Alternator Data Sheet Numbers	311B			309B			309B		308B	
Full Load Current (Amps @ Standby Rating)	120/208 2169	127/220 2050		139/240 1879	220/380 1187	240/416 1084	254/440 1025	277/480 939	347/600 ---	

Notes:
1. The broad range alternators can supply single phase output up to 2/3 set rated 3-phase kW at 1.0 power factor.
2. The extended stack (full single phase output) and 4 lead alternators can supply single phase output up to full set rated 3-phase kW at 1.0 power factor.

Control System

PowerCommand Control with AmpSentry™ Protection

- The PowerCommand Control is an integrated generator set control system providing governing, voltage regulation, engine protection, and operator interface functions.
- PowerCommand Controls include integral AmpSentry protection. AmpSentry provides a full range of alternator protection functions that are matched to the alternator provided.
- Controls provided include Battery monitoring and testing features, and Smart-Starting control system.
- InPower PC-based service tool available for detailed diagnostics.
- Available with Echelon LonWorks™ network interface.
- NEMA 3R enclosure.
- Suitable for operation in ambient temperatures from -40C to +70C, and altitudes to 13,000 feet (5000 meters).
- Prototype tested; UL, CSA, and CE compliant.

AmpSentry AC Protection

- Overcurrent and short circuit shutdown
- Overcurrent warning
- Single & 3-phase fault regulation
- Over and under voltage shutdown
- Over and under frequency shutdown
- Overload warning with alarm contact
- Reverse power and reverse Var shutdown
- Excitation fault

Engine Protection

- Overspeed shutdown
- Low oil pressure warning and shutdown
- High coolant temperature warning and shutdown
- High oil temperature warning (optional)
- Low coolant level warning or shutdown
- Low coolant temperature warning
- High and low battery voltage warning
- Weak battery warning
- Dead battery shutdown
- Fail to start (overcrank) shutdown
- Fail to crank shutdown
- Redundant start disconnect
- Cranking lockout
- Sensor failure indication

Operator Interface

- OFF/MANUAL/AUTO mode switch
- MANUAL RUN/STOP switch
- Panel lamp test switch
- Emergency Stop switch
- Alpha-numeric display with pushbutton access, for viewing engine and alternator data and providing setup, controls, and adjustments
- LED lamps indicating genset running, not in auto, common warning, common shutdown
- (5) configurable LED lamps
- LED Bargraph AC data display (optional)

Alternator Data

- Line-to-line and line-to-neutral AC volts
- 3-phase AC current
- Frequency
- Total and individual phase kW and kVA

Engine Data

- DC voltage
- Lube oil pressure
- Coolant temperature
- Lube oil temperature (optional)

Other Data

- Genset model data
- Start attempts, starts, running hours
- KW hours (total and since reset)
- Fault history
- Load profile (hours less than 30% and hours more than 90% load)
- System data display (optional with network and other PowerCommand gensets or transfer switches

Voltage Regulation

- Integrated digital electronic voltage regulator
- 3-phase line to neutral sensing
- PMG (Optional)
- Single and three phase fault regulation
- Configurable torque matching

Control Functions

- Data logging on faults
- Fault simulation (requires InPower)
- Time delay start and cooldown
- Cycle cranking
- (4) Configurable customer inputs
- (4) Configurable customer outputs
- (8) Configurable network inputs and (16) outputs (with optional network)

Options

[ ] Power Transfer Control
[ ] Analog AC Meter Display
[ ] Thermostatically Controlled Space Heater

[ ] Key-type mode switch
[ ] Ground fault module
[ ] Engine oil temperature
[ ] Auxiliary Relays (3)

[ ] Echelon LonWorks interface
[ ] Digital input and output module(s) (loose)
[ ] Remote annunciator (loose)

Generator Set Options

Engine
[ ] 120/240 V, W coolant heaters
[ ] 120/240 V, W lube oil heater
[ ] Electronic governor

Cooling System
[ ] Heat exchanger cooling
[ ] Remote radiator cooling

Fuel System
[ ] Flexible fuel connector
[ ] Fuel strainer
[ ] Dual fuel systems

Alternator
[ ] 105°C rise alternator
[ ] 125°C rise alternator
[ ] 120/240 V, 100 W anti-condensation heater
[ ] Single phase

Exhaust System
[ ] GenSet mounted muffler
[ ] Heavy duty exhaust elbow
[ ] Slip on exhaust connection

Generator Set
[ ] AC entrance box
[ ] Batteries
[ ] Battery charger
[ ] Export box packaging
[ ] Main line circuit breaker
[ ] PowerCommand Network Communication Module (NCM)
[ ] Stage 1 housing w/silencer
[ ] Stage II housing w/silencer
[ ] Remote annunciator panel
[ ] Spring isolators
[ ] Weather protective enclosure with silencer
[ ] 2 year standby warranty
[ ] 5 year basic power warranty

Available Products and Services

A wide range of products and services is available to match your power generation system requirements. Cummins Power Generation products and services include:

- Diesel and Spark-Ignited Generator Sets
- Transfer Switches
- Bypass Switches
- Parallel Load Transfer Equipment
- Digital Paralleling Switchgear
- PowerCommand Network and Software
- Distributor Application Support
- Planned Maintenance Agreements

Warranty

All components and subsystems are covered by an express limited one-year warranty. Other optional and extended factory warranties and local distributor maintenance agreements are available. Contact your distributor/dealer for more information.

Certifications

CSA - This generator is CSA certified to product class 4215-01.

PTS - The Prototype Test Support (PTS) program verifies the performance integrity of the generator set design. Products bearing the PTS symbol have been subjected to demanding tests in accordance to NFPA 110 to verify the design integrity and performance under both normal and abnormal operating conditions including short circuit, endurance, temperature rise, torsional vibration, and transient response, including full load pickup.

See your distributor for more information

Cummins NPower LLC
875 Lawrence Drive
DePere, WI 54115
920.337.9750
Fax: 920.337.9746
www.npower.cummins.com

Cummins and PowerCommand are registered trademarks of Cummins Inc.
AmpSentry is a trademark of Cummins Inc.
LonWorks is a registered trademark of Echelon

Important: Backfeed to a utility system can cause electrocution and/or property damage. Do not connect generator sets to any building electrical system except through an approved device or after building main switch is open.

Miratech Corporation
4224 S. 76th E. Avenue, Tulsa, OK 74145

As represented by:

R.F. Partridge & Associates, Inc.
13875 Cerritos Corporate Drive Unit B
Cerritos, CA 90703
TEL: (562)802-7345 FAX: (562)802-3186

October 12, 2007

Catalyst and Air Fuel Ratio Product Submittal

For:

Cummins Cal Pacific
El Cajon, CA

ITEM #1
Qty. 1
Miratech Model # RHSS-4228-14-C1
Stainless Steel Catalyst/Silencer Combo

ITEM # 2
Qty. 1
Miratech Model# MECR-11-TK6
Air Fuel Ratio Controller

RCS/RHS
CATALYST-SILENCER HOUSINGS

MAJOR HORSEPOWER.

Better-Value Catalyst-Silencer Combos For Mid-Size Engines.

These days, you need all the competitive edge you can get. Today's business arena demands it. And anything that saves you time, money and space is a guaranteed advantage.

RCS/RHS Catalyst-Silencer Combos
Natural Gas, Propane Or Diesel Mid-Sized Engines

That's why MIRATECH developed RCS/RHS Catalyst-Silencer Combo Units for natural gas, propane and diesel stationary engines – rich-burn or lean-burn – in the 200 – 8000 hp range. These better designed, better built, better value housings bring together a cost-effective, high-performance catalytic converter and a noise abatement system offering your choice of two grades of silencing.

This eliminates the need for two separate units. Why pay for two systems when one will do both jobs? With RCS/RHS, you save money from Day One through simpler, faster installation and reduced mounting requirements.

Then, when the RCS/RHS is up and running, you can bank on easier, more economical, breathe-easy compliance with emission control regulations and noise reduction requirements.

Integrated single-unit design, durable fabrication, and easy maintenance-access also cut servicing time. That could mean thousands of dollars in maintenance savings over the life of each unit.

CONTACT MIRATECH.

For mid-sized stationary combustion engines used in power generation, gas and air compression, water, petroleum or liquids pumping and other industrial applications, RCS/RHS is the cost-cutting solution that gives you both emissions and noise compliance: twice the performance, twice the benefits, and twice the value.

To find out more about MIRATECH RCS/RHS Catalyst-Silencer Combos – and our full line of cost-effective, high-performance emissions solutions – simply give us a call. Or pay a visit to our website: www.miratechcorp.com

WHY MIRATECH?

- Advanced Technology
- Cost-Effective, Comprehensive Solutions
- Unsurpassed Experience & Expertise
- Fast, Responsive, Customer-Focused Service & Support
  - *Prevent Non-Compliance Fines*
  - *Improve Engine & Catalyst Performance*
  - *Cut Maintenance Costs*
  - *Maximize Catalyst Life*

EMISSIONS SOLUTIONS

- Non-Selective Catalytic Reduction
  - *3-Way Catalyst Systems*
  - *Oxidation Catalysts*
  - *HAPs Catalysts*
  - *Diesel Oxidation Catalysts*
- Catalyst Housings
  - *MN/MBA*
  - *IQ*
- Catalyst-Silencer Combos
  - *QCC/QCH*
  - *RCS/RHS*
- Active Regeneration Soot Traps
- SCR Catalyst Systems
- NX Analyzers
- Analysis-Controlled Injection Systems
- Air-Fuel Ratio Control Systems
- Service Contracts
- Technical Support & Training
- MIRATECH Catalyst Services
- Replacement Parts

MIRATECH EMISSIONS SOLUTIONS

4224 SOUTH 76TH EAST AVENUE • TULSA, OKLAHOMA 74145-4712 • 800.640.3141 • WWW.MIRATECHCORP.COM

[DOUBLE-DUTY: EMISSIONS COMPLIANCE & SILENCING IN ONE UNIT.]

RCS/RHS
CATALYST-SILENCER HOUSINGS

DESIGNED SMART. BUILT TOUGH.

MIRATECH catalytic converters are better designed and better built – so they work harder, longer, at less cost and with less maintenance. For example, we produce catalyst elements through chemisorption catalyst impregnation. *The result?* Long-lasting, cost-efficient, poison-resistant performance. We also encase our catalysts in double-walled metal monolith frames – in your choice of tough carbon steel or 304 stainless – and the patented MIRATECH banding and pinning process is your assurance of superior thermal durability and mechanical strength.

EMISSIONS: CONTROLLED.

RCS/RHS combos use the same catalyst elements used in the MIRATECH IQ Catalytic Converter. The distinctive Flat-Top Bonnet™ design – along with improved gasket material in the RCS/RHS - eliminates blow-by, sagging and telescoping, and maximizes exhaust-catalyst contact, for more efficient emissions control.

The RCS/RHS brings a wide range of pollutants within compliance – and keeps you on the right side of the non-compliance fine line: carbon monoxide (CO), volatile organics (VOCs) and other hazardous air pollutants (HAPs), particulates and soot, as well as oxides of nitrogen produced by rich-burn engines. Each unit comes with positive-seal slots for up to two catalyst elements – giving you an expandable emissions control capacity. Plus, the RCS/RHS gives you a wider compliance window for Air-Fuel Ratio Control.

TWO LEVELS OF SILENCING.

RCS/RHS housings give you two levels of noise abatement to chose from. RCS units cut noise by 25-30 dBA. When more noise reduction is needed, RHS – Hospital grade – units deliver as much as 30-35 dBA of silencing.

BREATHE EASY: FULL SUPPORT.

At MIRATECH, we offer full support for each and every product we ship – with professional field support, on-site training and technical services. If you have questions, we'll answer them. If there's a problem, we'll fix it, no *ifs, ands* or *buts*. And we'll respond promptly with solutions. For details on MIRATECH service contracts, technical and catalyst services, give us a call or visit www.miratechcorp.com

RCS/RHS: BUILT TOUGH

RCS/RHS CATALYST SYSTEM

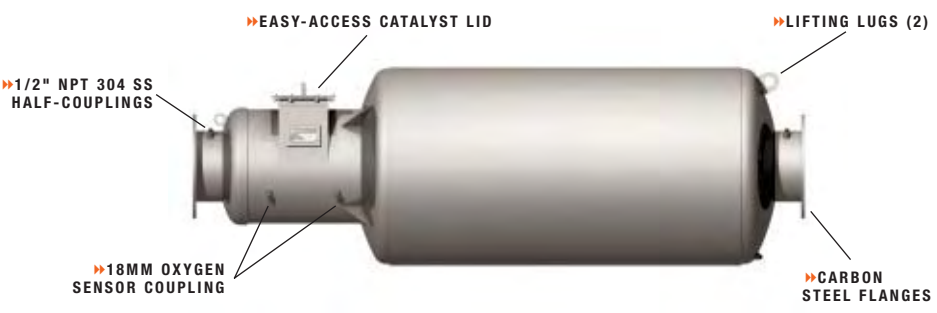

Your Choice: Carbon Steel Or 304 Stainless Outer Shell

EMISSIONS SOLUTIONS: CONTACT MIRATECH.

Whatever your emission control needs may be, count on MIRATECH for solutions. Contact us by phone, e-mail, or FAX – or simply visit our website: www.miratechcorp.com. *Ask for your FREE subscription to our useful, fact-filled electronic newsletter, THE EMISSIONS MONITOR.*

MIRATECH EMISSIONS SOLUTIONS
4224 SOUTH 76TH EAST AVENUE • TULSA, OKLAHOMA 74145-4712
800.640.3141 • www.miratechcorp.com

ONGOING Compliance

WHY MIRATECH RCS/RHS?

Twice The Performance: Emissions & Noise Control

APPLICATIONS

- Lean-Burn Or Rich-Burn Engines
  - *200-8000 hp*
- Natural Gas, LPG, Diesel Or Dual-Fuel
  - *Gas Compression*
  - *Power Generation (Backup Or Stand-By)*
  - *Air Compression*
  - *Liquid Or Petroleum Pumping*
  - *Irrigation Pumping*

FEATURES & BENEFITS

- Choose The System That Works Best For You:
  - *3-Way Catalyst*
  - *Natural Gas Oxidation*
  - *Diesel Oxidation*
- 2 Levels Of High Sound Attenuation:
  - *1 RCS: 25-30 dBA*
  - *2 RHS: 30-35 dBA*
- Integrated Single-Unit Design
  - *Saves Space; Reduces Installation & Maintenance Costs*
- Trunion Mount Design
  - *Faster, Easier Installation; Easier Maintenance*
- Fewer Components
  - *Reduced Part Costs*
- Flat-Top Bonnet™ Element Design, Improved Gasket Material
  - *Eliminates Blow-By & Enhances Catalyst Performance*
- Virtually Indestructible Metal-Monolith Element
  - *Patented Banding & Pinning Process*
  - *Superior Mechanical Strength, Thermal Durability & Handling Safety*
- Positive Seal Slots For Up To Two Catalyst Elements
  - *Expandable Emissions Control Capacity*
- 125# ANSI FF Flange Straddles Centerline – Easier Installation

MIR-RCS/RHS 04-04 REV 1
©COPYRIGHT 2004: MIRATECH CORPORATION

MIRATECH EMISSIONS SOLUTIONS

3-Way CATALYSTS

EMISSIONS: CONTROLLED.

Cost-Effective, Ongoing Compliance For Rich-Burn Industrial Engines.

If you run rich-burn stationary natural gas- or propane-fueled industrial engines, you face tough compliance rules – and stiff non-compliance fines – covering three types of exhaust emissions: carbon monoxide (CO), oxides of nitrogen (NOx), and hydrocarbons (HCs) including volatile organic compounds (VOCs) and a long list of EPA-classified hazardous air pollutants (HAPs).

MIRATECH Catalyst Manufacturing
Better Designed, Better Built

The good news? One cost-effective, high-performance, easy-maintenance catalyst element brings your operation within compliance – and removes the risk of non-compliance fines – on all three fronts: The MIRATECH 3-Way Catalyst.

Available in a wide range of sizes and shapes, the 3-Way Catalyst can be custom-tailored to fit virtually any space requirements, any brand of catalytic converter, and any budget.

For operators in gas compression, air compression, water, petroleum or liquids pumping, chillers and power generation, and a variety of other applications, it can be a breath of fresh air: an affordable, effective, no-hassle answer to industrial emissions rules.

CONTACT MIRATECH.

Ask any of the thousands of MIRATECH customers who know first-hand: the 3-Way Catalyst is the most advanced and cost-effective all-in-one Non-Selective Catalytic Reduction solution you can buy. To put the 3-Way Catalyst to work in your operation or to find out more about other MIRATECH Emissions Solutions, simply give us a call. Better yet, visit our website: www.miratechcorp.com

WHY MIRATECH?

- Advanced Technology
- Cost-Effective, Comprehensive Solutions
- Unsurpassed Experience & Expertise
- Fast, Responsive, Customer-Focused Service & Support
  - *Prevent Non-Compliance Fines*
  - *Improve Engine & Catalyst Performance*
  - *Cut Maintenance Costs*
  - *Maximize Catalyst Life*

EMISSIONS SOLUTIONS

- Non-Selective Catalytic Reduction
  - *3-Way Catalyst Systems*
  - *Oxidation Catalysts*
  - *HAPs Catalysts*
  - *Diesel Oxidation Catalysts*
- Catalyst Housings
  - *MN/MBA*
  - *IQ*
- Catalyst-Silencer Combos
  - *QCC/QCH*
  - *RCS/RHS*
- Active Regeneration Soot Traps
- SCR Catalyst Systems
- NX Analyzers
- Analysis-Controlled Injection Systems
- Air-Fuel Ratio Control Systems
- Service Contracts
- Technical Support & Training
- MIRATECH Catalyst Services
- Replacement Parts

MIRATECH EMISSIONS SOLUTIONS

4224 SOUTH 76TH EAST AVENUE • TULSA, OKLAHOMA 74145-4712 • 800.640.3141 • WWW.MIRATECHCORP.COM

3-Way CATALYSTS

THE 3-WAY ADVANTAGE.

The MIRATECH 3-Way Catalyst gives you a reliable, cost-effective total solution in rich-burn industrial engine emissions control – simultaneously cutting NOx, CO, hydrocarbons, VOCs and HAPs to compliance levels. And that keeps your operation on the right side of the non-compliance fine-line, with easy installation and maintenance, less impact on engine performance, and fewer headaches and hassles for you and your people.

BETTER DESIGNED, BETTER BUILT.

Nothing prevents nesting or resists vibration and shock better than the 3-Way Catalyst's corrugated metal foil construction – with the multi-layered honeycomb design adding durability. Chemisorption catalyst impregnation produces a cost-effective, long-lasting element that resists masking and catalyst "poisoning." And the patented MIRATECH banding and pinning process is your assurance of superior mechanical strength and high-temperature tolerance.

CATALYST SOLUTION GUIDE

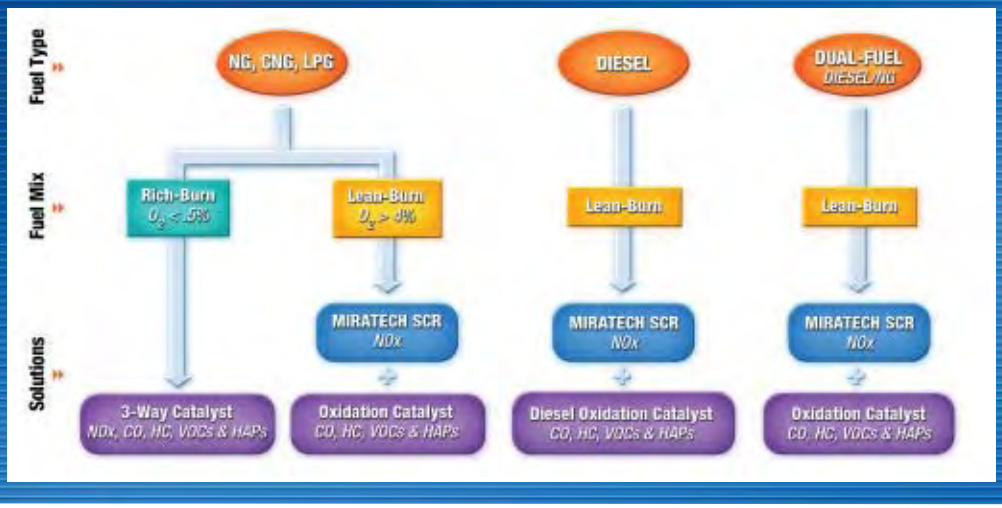

O_2: Oxygen / CO: Carbon Monoxide / NO_x: Oxides of Nitrogen / HC: Hydrocarbons / VOCs: Volatile Organic Compounds / HAPs: Hazardous Air Pollutants

UNCONTROLLED EMISSIONS: RICH-BURN & LEAN-BURN ENGINES

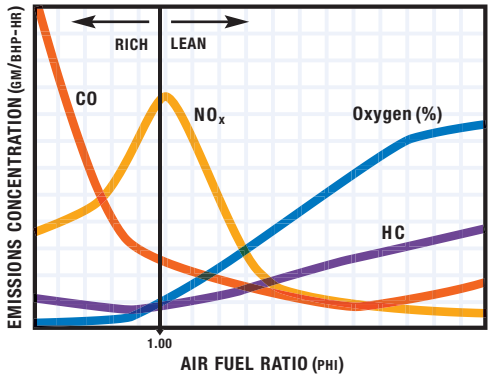

Each element is wrapped in tough 304 stainless steel for virtual indestructibility, as well as personnel safety. The hard outer band and "Easy-Grab" lift protects workers from injury and makes element insertion and removal quick and easy.

MIRATECH REPLACEMENTS.

MIRATECH manufactures replacement elements for our MBA, EQ and IQ catalytic converters, as well as our RCS/RHS Catalyst-Silencer combos. Custom designs to replace elements from other manufacturers – with the hallmark quality, performance and value of MIRATECH 3-Way, Oxidation and Diesel Oxidation Catalysts – are also available.

EMISSIONS SOLUTIONS: CONTACT MIRATECH.

Whatever your emission control needs may be, count on MIRATECH for solutions that pay off in benefits you can literally take to the bank. Contact us by phone, e-mail, or FAX – or simply visit our website: www.miratechcorp.com. *Ask for your FREE subscription to our useful, fact-filled electronic newsletter, THE EMISSIONS MONITOR.*

MIRATECH EMISSIONS SOLUTIONS
4224 SOUTH 76TH EAST AVENUE • TULSA, OKLAHOMA 74145-4712
800.640.3141 • www.miratechcorp.com

ONGOING Compliance

WHY MIRATECH 3-WAY CATALYSTS?

Cost-Effective, No-Hassle Total Emissions Compliance:

- NOx, CO, HC, VOCs, HAPs
- Better Designed, Better Built, Better Value

APPLICATIONS

- Rich-Burn Stationary Engines, Natural Gas, LPG
  - *Gas Compression*
  - *Air Compression*
  - *Water Pumps & Irrigation*
  - *Power Generation*
  - *Chillers*

FEATURES & BENEFITS

- Minimizes Catalyst Cost & Space Requirements
  - *Simultaneously Cuts NOx, CO, VOCs, Aldehydes & Other HAPs,*
  - *Prevents Non-Compliance Fines*
- Quick & Easy Element Insertion & Removal
- Flat-Top Bonnet™ Design Eliminates Blow-By & Enhances Catalyst Efficiency
- Resists Vibration & Shock
- Low Pressure-Drop
- Minimizes Impact On Engine Performance
- 304 Stainless Steel Metal Monolith: Virtually Indestructible & Safer For Workers
- Patented Banded & Pinned Construction:
  - *Superior Mechanical Strength & Thermal Durability*
- Independent Corrugated & Flat-Foil Construction Honeycomb Design:
  - *Prevents Nesting, Masking & "Poisoning"*
- One-Year Warranty

MIR-3 WAY 04-04 REV 1
©COPYRIGHT 2004: MIRATECH CORPORATION

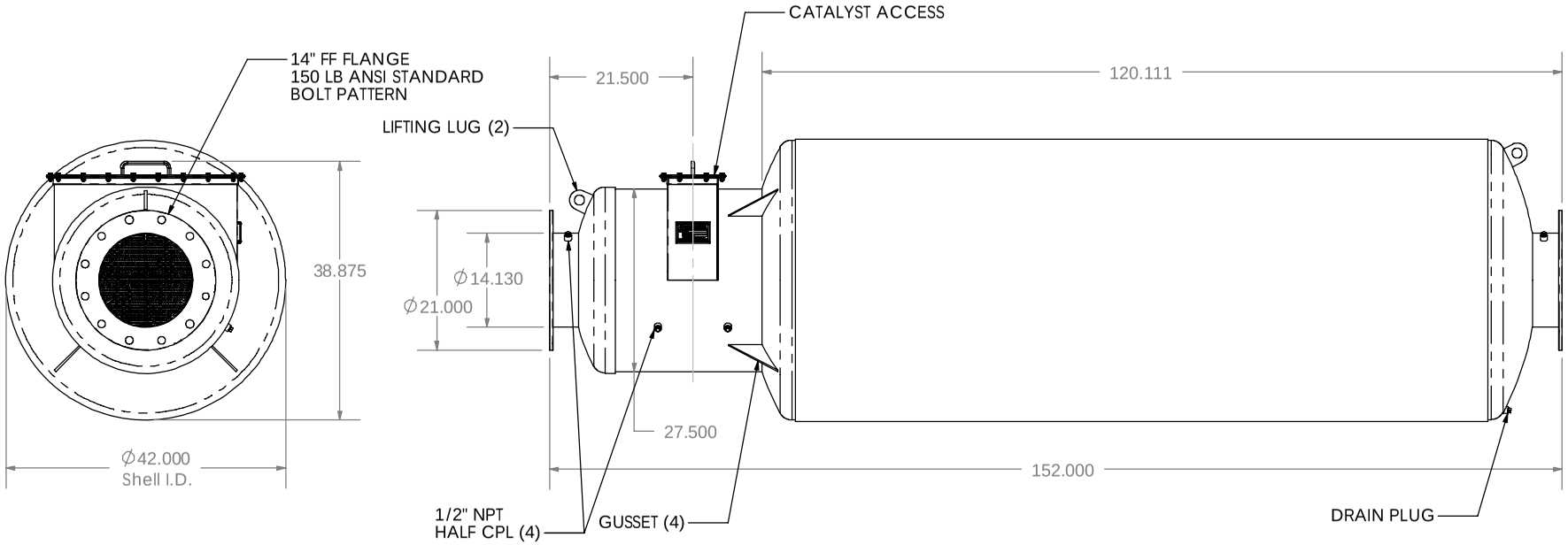

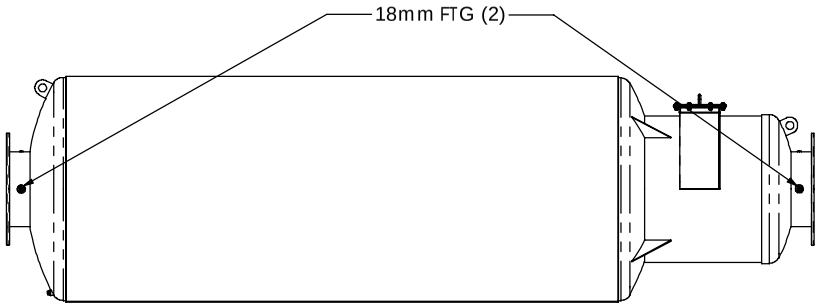

BACK SIDE DETAIL
SCALE 1:34

PROPRIETARY AND CONFIDENTIAL

THE INFORMATION CONTAINED IN THIS DRAWING IS THE SOLE PROPERTY OF MIRATECH CORPORATION. ANY REPRODUCTION IN PART OR AS A WHOLE WITHOUT THE WRITTEN PERMISSION OF MIRATECH CORPORATION IS PROHIBITED.

DIMENSIONS ARE IN INCHES

TOLERANCES: +/- 1/16" UNLESS OTHERWISE SPECIFIED

DRAWN	DATE
JWS	4/15/2004

DO NOT SCALE DRAWING

MIRATECH EMISSIONS SOLUTIONS

RHS-4228-14
Sales Drawing

SIZE	DWG. NO.	REV.
A	RHS-4228-14 SD	0

SCALE:1:24 | WEIGHT: 1407 lbs. with 1 Element | SHEET 1 OF 1

CC_23077 Mec-R FINAL.qxd 10/3/03 2:54 PM Page 1

Compliance Controls MEC-R
RICH-BURN AIR-FUEL CONTROL SYSTEM

If your business banks on revenues from rich-burn, spark-ignited, natural gas-fueled engines with catalytic converters, you face tough challenges EVERY DAY:

- **EMISSIONS CONTROL COMPLIANCE.**
  Variance by as little as *one percent* from the stoichiometric air-fuel ratio – the ratio at which all fuel is oxidized in engine combustion – will keep your catalytic converter from doing its job.
- **OPERATIONAL ISSUES.**
  In any competitive arena, your business suffers when you're not getting the benefits of today's most advanced technologies, and tomorrow's. But keeping up with technology can be costly – in dollars, time, headaches and hassles. And who can afford to keep *rocket scientists* on board to run engines day-to-day?
- **TROUBLESHOOTING & MAINTENANCE.**
  Engine misfires, ashed catalysts, overheating: these and other glitches not only impair engine performance and shorten your equipment's life span. They can also cost you plenty. Take one example. In mere seconds, the unburned fuel coughed into your exhaust stream by a misfiring cylinder can cause a hot catalyst *to burst into flame.*

Compliance Controls has the ideal solution:

THE MEC-R RICH-BURN AIR-FUEL CONTROL SYSTEM™

Compliance CONTROLS

CC_23077 Mec-R FINAL.qxd 10/3/03 2:54 PM Page 2

The best. Bar none.

THE MEC-R RICH-BURN AIR-FUEL CONTROL SYSTEM maximizes the efficiency of a three-way catalyst by maintaining a constant air-fuel ratio over varying engine loads, speeds, fuel quality, ambient temperatures and barometric pressures.

And the MEC-R works *without operator intervention.*

Easy to install, even easier to use, and equipped with a comprehensive 44-fault on-board diagnostics and troubleshooting system, the Windows®-based MEC-R redefines the state-of-the-art: in hardware, microprocessor power, control system software, operator interface options, adaptability to variable engine conditions and control requirements, software upgradeability, you name it.

DOLLARS & SENSE. Continuous emission control. Improved engine performance. Longer, more trouble-free equipment service-life. Fail-safe troubleshooting. Fast, easy installation. Easy, user-friendly operation, with minimal training. Network compatibility, with high-speed data transfer. Powerful smart-system features and benefits you won't find anywhere else. All with the flexibility to tailor solutions to your specific current and future wants and needs.

Business owners, financial officers, engineers, IT and operations managers alike can all agree: the Compliance Controls MEC-R Rich-Burn Air-Fuel Control System is simply the best value on the market, bar none.

ABOUT COMPLIANCE CONTROLS. Compliance Controls was formed by two of the best-known, most trusted leaders in industrial engine emissions control and equipment management solutions: MIRATECH Corporation and F.W. Murphy. Backed by our parent companies' distribution networks, Compliance Controls focuses exclusively on delivering and supporting MEC Air-Fuel Control System solutions tailored to our customers' specific requirements.

FEATURES

- >> Fast, easy, low-cost installation
- >> Fits virtually any gas-fueled, carbureted, rich-burn industrial engine – with any catalytic converter
- >> Windows® -based platform compatible with all computers
  Software can be installed on laptop, PC, Palm®-type handheld or network
- >> Adaptive valve-learn software
  Continually updates look-up tables for rapid transient response and continuous control in Open Loop mode
- >> At-a-glance on-screen dashboard graphics
  LED Driver (COMM Modules) for Power, Alarm & Shutdown, Controller Communication and more
- >> Comprehensive 44-fault diagnostics
  Continuous oxygen sensor health monitoring; detection of ashed catalysts, misfiring, overheating, valve sticking and more
- >> Data plotting for easy, accurate troubleshooting
- >> Alarm and shut down dry contacts
- >> Pre-catalyst closed loop, exhaust oxygen feedback control
- >> Post-catalyst exhaust oxygen feedback; cascade control for fast, real-time adaptation to changing catalyst performance
- >> Variable set-point for pre-catalyst and post-catalyst exhaust oxygen control – for real-time response to varying engine loads
- >> Catalyst temperature monitoring to protect the catalyst from engine fueling malfunctions
- >> Two-dimensional open-loop valve positioning, based on engine speed and load
  Maintains compliance even with critical oxygen sensor malfunction
- >> Drives up to two fuel-metering valves for "V" engine configurations
- >> Multiple valve control options:
  - Smart Valve Electronic Pressure Regulator
    Controls all engine fuel with full authority, with differential fuel pressure control in case of control system failure
  - Full Authority Valve
    Controls all engine fuel via butterfly valve
  - Trim Fuel Valve
    Adds supplemental fuel to the air intake system via system-controlled proportional fuel valve
- >> RS-485/ModBus® and CAN link communications support for high-speed data transmission

44-FAULT FAILSAFE DIAGNOSTICS

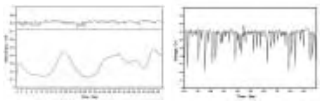

STICKING VALVE CONTINUOUS MISFIRE

BENEFITS

- >> Continuous, precise emissions control compliance
- >> Improved engine & emissions control performance
- >> Longer, more trouble-free equipment life
- >> Fail-safe troubleshooting & diagnostics, with automatic shutdowns
  - *Eliminates operator guesswork and look-see troubleshooting*
  - *Prevents costly equipment damage and failures*
  - *Better-managed maintenance costs; lower replacement costs*
- >> Fully automatic; no operator required in normal operation
- >> Minimal operator training
- >> Flexible network compatibility – with high-speed data transfer
- >> Responsive, full-service support: 24-7-365
- >> Software, upgrades and documentation available on disk or online

Visit Our Website. Or Give Us A Call.

To find out more about the MEC-R Rich-Burn Air-Fuel Control System, please visit our website: *www.compliancecontrols.com.* Or simply give us a call:
918-627-5050

Compliance CONTROLS

4224 S. 76th E. Ave. • Tulsa, OK 74145-4712 • *telephone* 918.627.5050 • *fax* 918.622.3928
www.compliancecontrols.com • info@compliancecontrols.com

MEC-R1-10.03

Compliance Controls, MEC-R and MEC-R Rich-Burn Air-Fuel Control System are registered trademarks of Compliance Controls, LLC.
© Copyright 2003: Compliance Controls, LLC

Emissions Control Equipment Specification Summary

Proposal Number: RFP-07-0931 Rev(4)
10/10/2007

Ref: nscr/silencer unit

APPLICATION

# of Engines:	1
Engine Operation:	Gas Compression
Fuel:	Natural Gas
Lubrication Oil:	0.6 wt% sulfated ash or less

Engine Data:

Engine:	Cummins GTA38
Power Output:	625 kW
Speed:	1,800 RPM
Design Exhaust Temp:	1,123 F
Design Exhaust Flow Rate:	6,637 acfm (cfm)

Catalytic Converter System Data:

Catalytic Converter Model:	RHSS-4228-14-C1
Inlet / Outlet Pipe Size:	14 inches
Overall Length:	152 inches
Diameter:	42/28 inches
Weight:	1,407 lbs
Converter Pressure Loss:	6.2 Inches of WC (Housing + Catalyst: Flange to Flange)
Sound Attenuation:	30-35 dba
Catalyst Section Internals:	304 SS
Shell / Body Construction:*	304 SS
Inlet / Outlet Connection:	Standard 125# ANSI Bolt Pattern Flanges -- FF
Instrumentation Ports:	1 inlet/1 outlet/2 catalyst (1/2" NPT)
Oxygen Sensor Ports:	1 inlet/1 outlet (18mm)
Temperature Limits:	750 - 1,250 degrees F (inlet); 1,350 degrees F (outlet)

Raw Engine Emission Outlet Data:

	g/bhp-hr	lb/MW-hr	ppmvd	ppmvd @ 15% O_2	lb/hr	g/kW-hr	tons/yr
NOx	17.53	51.83	2,431	703	32.39	23.51	3.24
CO	4.77	14.10	1,086	314	8.81	6.40	0.88
NMHC	0.33	0.98	131	38	0.61	0.44	0.06

Post System Emission Outlet Data:

	g/bhp-hr	lb/MW-hr	ppmvd	ppmvd @ 15% O_2	lb/hr	g/kW-hr	tons/yr
NOx	1.50	4.43	208	60	2.77	2.01	0.28
CO	2.00	5.91	455	132	3.70	2.68	0.37

% O_2	0.5
H_2O Assumption	16.0%

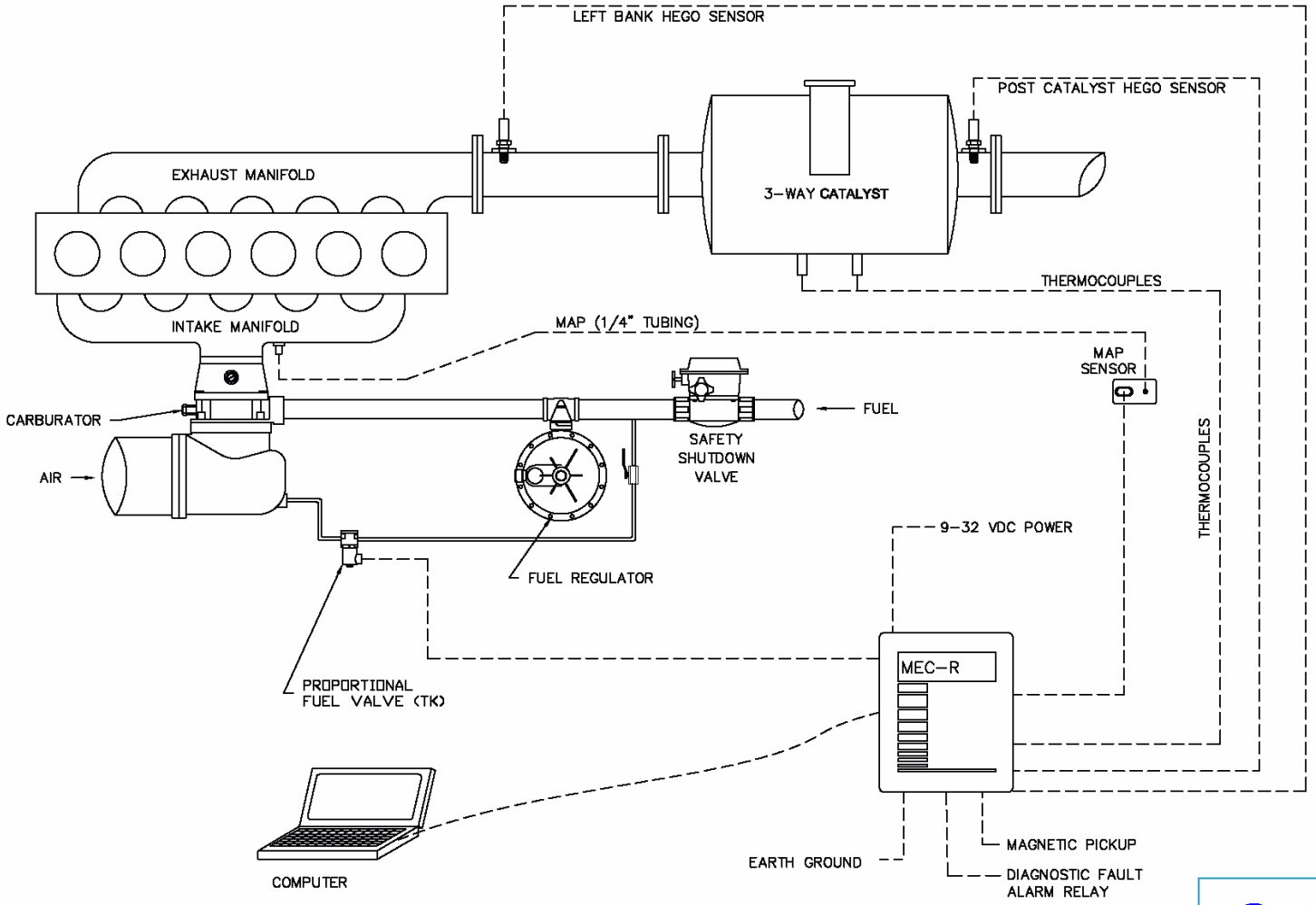

Compliance CONTROLS

PROPRIETARY AND CONFIDENTIAL

THE INFORMATION CONTAINED IN THIS DRAWING IS THE SOLE PROPERTY OF MIRATECH CORPORATION. ANY REPRODUCTION IN PART OR WHOLE WITHOUT THE WRITTEN PERMISSION OF MIRATECH CORPORATION IS PROHIBITED.

DIMENSIONS ARE APPROXINATE IN INCHES UNLESS OTHERWISE SPECIFIED

DO NOT SCALE DRAWING

DRAWN	DATE
NJH	1/18/06
REVIEWED BY	DATE
–	–

MECR-11-TK6 LAYOUT DRAWING

SIZE	DWG. NO.	REV.
A	MECR-11-TK6.DWG	0

SCALE: NTS | SHEET 1 OF 1

MIRATECH EMISSIONS SOLUTIONS

GENERAL TERMS AND CONDITIONS OF SALE

1. **Integration** The General Terms and Conditions of Sale contained herein shall be deemed a material part of any sale or proposed sale by MIRATECH Corporation ("Seller") to _____ ("Purchaser") and, unless and only to the extent specifically excluded therein, shall be a material part of any subsequent letter of authorization, contract, purchase order, sale or other agreement between Seller and Purchaser, with respect to all products, equipment, services and/or parts relating thereto (hereinafter referred to as the "Product").

2. **Compliance** To Seller's knowledge, Seller has complied with all applicable laws and regulations including, but not limited to, the Fair Labor Standards Act, the Civil Rights Act of 1964, the Equal Employment Opportunity Act of 1972, as respectively amended, Executive Orders 11246, 11375 and 11141 (Title 41, Chapter 60, Code of Federal Regulations), the Vietnam Era Veterans Readjustment Act of 1974, and all amendments thereto and regulations, rules and orders there under, as amended or superseded and all of the foregoing are made a part hereof by reference and incorporated herein as though fully set forth herein. Purchaser understands and agrees that the foregoing sentence is for Purchaser's information stating that which Seller strives to achieve and is not made as a covenant, warranty or representation and is not meant to create or permit, nor shall it be construed as creating or permitting any enforceable rights hereunder for Purchaser or any other person or entity. Seller shall in no event be responsible for any failure to comply with such Act resulting from the location, use, operation or maintenance of the Product or from alteration of the Product by personnel other than those employed by Seller or from an option or accessory to the Product which was available to Purchaser but omitted at Purchaser's direction, or from design or instructions furnished by Purchaser or its agents. Seller's responsibility hereunder is limited to modification or replacement of the Product so that the Product conforms to the applicable regulations or standards or, at Seller's option, to a refund of the purchase price less an allowance for normal depreciation upon the return of the Product to Seller at the point of shipment at Purchaser's expense. All standards promulgated with respect to noise or air control are specifically excluded hereunder.

3. **Title, Risk of Loss, Security Interest** Title and risk of loss or damage to the Product shall pass to Purchaser under tender of delivery F.O.B. the manufacturing facility unless expressly stipulated otherwise, regardless of when partial or final payment is to be made by Purchaser. Notwithstanding the foregoing, a purchase money security interest in the Product or any replacement thereof shall remain in Seller, regardless of mode of attachment to realty or other property, until full payment has been made therefore and collected by Seller.

4. **Inspection, Rejection, Remedy** Purchaser shall have the right to reasonable inspection of the Product after delivery to destination, which inspection shall be completed within ten (10) days of the date of delivery to destination. Any rejection by Purchaser as to part or all of the Product shall be in writing, specifically stating the non-conformities thereof. In such event, Seller shall have a reasonable period of time to determine the validity of and, if necessary, to correct the non-conformities forming the basis of the Purchaser's rejection or, at Seller's option and if appropriate, to replace part or all of the Product. Purchaser's failure to make rejection as herein stated, or to allow Seller to cure Purchaser's objections, shall be deemed to conclusively establish acceptance by Purchaser of the Product.

5. **Time, Forced Majeure** Seller may, from time to time, quote delivery dates to Purchaser. Such dates shall be interpreted as estimated and in no event shall such dates be construed as falling within the meaning of "time is of the essence." Seller shall not be liable for loss, damage, detention, or delay due to war, riots, civil insurrection or acts of the common enemy, fire, flood, severe weather conditions at Seller's premises or outside fabrication sites, strikes or other labor difficulties, acts of civil or military authority including governmental law, orders, priorities or regulations, acts of Purchaser, embargo, car shortage, wrecks or delay in transportation, inability to obtain necessary labor, materials or manufacturing facilities from usual sources, faulty forgings or castings, or other causes beyond the reasonable control of Seller. In the event of delay in performance due to any such cause, the date of delivery or time for completion shall be adjusted to reflect the actual length of time necessary to properly reflect the delay without change to the purchase price. In the event of such delay or default in delivery, Seller shall complete work in progress and/or make delivery as soon as reasonably practicable. Upon completion and delivery of the Product to Purchaser, after such delay in delivery, the obligation of Purchaser for payment shall be completely reinstated.

6. **Taxes** Prices quoted by Seller do not include any federal, state or local property, license, privilege, sales, use, excise, gross receipts or other like taxes which may now or hereafter be applicable to, measured by, or imposed upon this transaction, the Product, its sale, its value, its use or any services performed in connection therewith. Such taxes shall be paid by Purchaser or, if paid by Seller, shall be itemized separately to Purchaser, who shall make prompt payment therefore to Seller.

7.1 **Limited Warranty** Subject to the exclusions contained herein, Seller warrants that the Product shall be free of defects in material and workmanship for a period of twelve (12) months from the date the Product is placed in operation or eighteen (18) months from the date the Product is complete and ready for shipment, whichever shall first occur, and provided Purchaser shall, within such period, notify Seller in writing of such defect(s) and fully cooperate with Seller in pursuing the remedying thereof. Should any failure to conform to this warranty be reported to Seller within said period, Seller shall, upon Purchaser promptly notifying Seller in writing thereof, correct such nonconformity by suitable repair to the Product or, at Seller's option, furnish replacement parts F.O.B. Seller's point of shipment provided Purchaser has restored the Product to the "as shipped" condition prior to installation and has installed, maintained and operated the Product in accordance with standard industry practices and has complied with the specific recommendations of Seller respecting the Product. Accessories or other parts of the Product furnished by Seller, but manufactured by others, shall carry whatever warranty, if any, the manufacturers thereof have given to Seller and which can be passed on to Purchaser. Purchaser agrees to look solely to such other manufacturers or suppliers of such accessories or parts for any warranty, repair or product liability claims arising out of the performance, condition or use of such accessories or parts. Seller agrees to cooperate in furnishing assignments of its rights thereto to Purchaser from such manufacturers and suppliers. Seller shall not be liable for any repairs, replacements or adjustments to the Product or any costs of labor performed by Purchaser without Seller's prior written approval. Seller's warranty shall expire in the event the Product is misused, neglected or operated other than for its intended purpose. Unless specifically stated in writing, Seller makes no performance warranty of any kind respecting the Product, the effects of corrosion, erosion and normal wear and tear are specifically excluded from Seller's warranty. In the event performance warranties are expressly included, in writing, Seller's obligation shall be to correct non-conformities in the manner and for the period of time provided herein above.

Correction by Seller of non-conformities, whether patent or latent, in the manner and for the period of time provided above, shall constitute fulfillment of all liabilities of Seller for such non-conformities, whether based on contract, warranty, negligence, indemnity, strict liability or otherwise with respect to or arising out the Product. Seller shall in no event be liable for consequential damages.

7.2 **Limited Warranty, Conditions** Throughout the Warranty Period, Seller warrants that the Product will achieve the emissions levels set forth in the Proposal referenced in and attached to the Contract between Seller and Purchaser, subject to the conditions that

a. the Product is operated and maintained at all times in accordance with the Seller's written instructions;
b. the Purchaser's equipment is operated and maintained at all times in accordance with all manufacturer's instructions and guidelines;
c. the Purchaser's equipment, during operation, shall never exceed the raw emission rate, the flow rate or temperature levels set forth in the Proposal;
d. the Purchaser's equipment shall never fall below the lower temperature limits stated in the Proposal;
e. The Purchaser will operate the equipment so as to eliminate any NO_x fluctuations greater than 1% of the NO_x emission target;

Emissions levels, temperature and flow rates from Purchaser's equipment and the Product discharge point shall be tested at the Purchaser's expense, in accordance with a mutually agreed test procedure and protocol consistent with accepted industry practices.

If the above conditions are met and the Product fails to achieve the output performance stated in the Proposal within the Warranty Period, Seller will replace or modify and adjust its Product as needed to meet such output performance standards. Purchaser is required to notify the Seller in writing of the specific defect and provide Seller with complete documentation of the defect and satisfaction of all conditions, a – e, of this article. If Seller is unable to achieve the output performance standards under the Contract conditions within a mutually agreed to time period, Purchaser may rescind the sale, and Seller shall return the purchase price which shall be Purchaser's sole remedy for breach of the warranty made in this paragraph. In no event shall Seller be responsible for damages, consequential, punitive or otherwise.

7.3 **Limited Warranty, Insulated Carbon Steel** The Seller's warranty for any carbon steel housing that is insulated and exposed to an operating temperature of 900 degrees F is voided.

7.4 **Warranty Disclaimer** **SELLER MAKES NO OTHER WARRANTY OR REPRESENTATION OF ANY KIND WHATSOEVER, EXPRESSED OR IMPLIED, EXCEPT THAT OF GOOD TITLE TO THE PRODUCT, AND ALL IMPLIED WARRANTIES, INCLUDING ANY WARRANTY OF MERCHANTABILITY AND/OR FITNESS FOR A PARTICULAR PURPOSE, ARE HEREBY DISCLAIMED.**

Revision 3, created September 2005
MIRATECH Terms and Conditions Rev 3 dated September 2005.doc

8. **Set-off** Purchaser shall not have the right to retain, back charge, or set off against any amounts which may be or become payable by it to Seller or otherwise, for amounts which Seller may allegedly or in fact owe Purchaser whether arising hereunder or otherwise.

9. **Remedies Exclusive** The remedies of Purchaser set forth herein are exclusive. The total liability of Seller with respect to the performance and other matters related to the manufacture, sale, delivery, installation, repair or technical direction thereof, whether based on contract, warranty, negligence, indemnity, strict liability or otherwise shall in no event exceed the purchase price of the particular Unit of Product upon which such liability is based, and not the aggregate of all Products covered by any agreement or document between Seller and Purchaser. Seller shall, in no event, be liable to Purchaser, any successors in interest or any beneficiary or assignee of Purchaser, for any consequential, incidental, indirect, special or punitive damages or any defect in, or failure or malfunction of, the Product, whether based upon lost goodwill, lost profits or revenue, interest, work stoppage, impairment of other goods loss by reason of shutdown or non-operation, increased expenses of operation of Product, loss of use of power system, costs of purchase of replacement power or claims of Purchaser or customers of Purchaser for service interruption, whether or not such loss or damage is based on contract, warranty, negligence, indemnity, strict liability or otherwise. Purchaser warrants that the Product is purchased for, and will be used for, business purposes only by qualified and properly trained personnel.

10. **Governing Law – Venue** The rights and obligations of Purchaser and Seller shall be construed in accordance with and governed by the laws of the State of Oklahoma, notwithstanding any conflict of law provisions which would have the effect of making the law of another state applicable. Seller and Purchaser agree that venue respecting any and all disputes between Purchaser and Seller with regard to the Product shall be Tulsa County, Oklahoma.

11. **No Waiver** No waiver by Seller of any breach of any obligation of Purchaser set forth in the General Terms and Conditions herein shall be construed as a waiver of any succeeding breach of the same or of any covenant or condition, and in no event shall this provision itself be waived.

12. **Payment** Payment terms shall be as stated in the letter of authorization, purchase order or other agreement between Seller and Purchaser. Terms of payment are net ten (10) days from date of invoice, unless otherwise agreed in writing.

13.1 **Cancellation of Contract before Delivery** For standard products, a cancellation charge equal to, in the sole discretion of the Seller, not more than 50% of the original purchase price may be made for any cancellation of the Contract by Purchaser prior to Seller's delivery of the Product to Purchaser. For custom products, a cancellation charge equal to, in the sole discretion of the Seller, not more than 100% of the original purchase price may be made for any cancellation of the Contract by Purchaser prior to Seller's delivery of the Product to Purchaser. The parties agree that such cancellation charges represent Seller's liquidated damages arising out of cancellation of the Contract in lieu of actual damages, it being understood and agreed between the parties that Seller's actual damages would be impractical or extremely difficult, time consuming and expensive to ascertain. Seller's failure to impose a cancellation charge with respect to one or more cancellations by Purchaser and/or other customers shall not be deemed in any case a waiver of its right under the Contract to impose such a charge in connection with any other cancellation by Purchaser, and Purchaser may not rely on any representation of any person to the contrary.

13.2 **Returns** Subject to Purchaser's payment in advance of a restocking fee and any associated shipping and handling costs, Seller will accept return of a Product within 90 days following delivery of the Product to Purchaser if the Product is returned to Seller complete and uninstalled in new condition. The amount of such restocking fee will be determined in accordance with Seller's then current Return Material Authorization policy. Any return of a Product more than 90 days following delivery, including the terms thereof, shall be within the sole and absolute discretion of the Seller.

14. **Conflicting Provisions** In case of any conflict, the General Terms and Conditions contained herein shall supersede any and all specifications and/or other terms and conditions previously supplied by Purchaser in connection with or upon a letter of authorization, purchase order or any other agreement, as well as any custom, prior conduct or course of dealing. No agreement, oral representation or other understanding any way modifying or amending the General Terms and Conditions, or having the effect of enlarging the obligations of Seller hereunder, shall be binding upon the Seller unless such modification is clear, certain and in writing in the form of an amended letter of authorization, purchase order or other agreement duly executed by Purchaser and an authorized representative of Seller.

Revision 3, created September 2005
MIRATECH Terms and Conditions Rev 3 dated September 2005.doc

GENERAL TERMS AND CONDITIONS OF SALE

1. **Integration** The General Terms and Conditions of Sale contained herein shall be deemed a material part of any sale or proposed sale by Compliance Control, LLC ("Seller") to _____ ("Purchaser") and, unless and only to the extent specifically excluded therein, shall be a material part of any subsequent letter of authorization, contract, purchase order, acceptance agreement, sale or other agreement ("Contract") between Seller and Purchaser, with respect to all products, equipment, services and/or parts relating thereto (hereinafter referred to as the "Product").

2. **Compliance** To Seller's knowledge, Seller has complied with all applicable laws and regulations including, but not limited to, the Fair Labor Standards Act, the Civil Rights Act of 1964, the Equal Employment Opportunity Act of 1972, as respectively amended, Executive Orders 11246, 11375 and 11141 (Title 41, Chapter 60, Code of Federal Regulations), the Vietnam Era Veterans Readjustment Act of 1974, and all amendments thereto and regulations, rules and orders there under, as amended or superseded and all of the foregoing are made a part hereof by reference and incorporated herein as though fully set forth herein. Purchaser understands and agrees that the foregoing sentence is for Purchaser's information stating that which Seller strives to achieve and is not made as a covenant, warranty or representation and is not meant to create or permit, nor shall it be construed as creating or permitting any enforceable rights hereunder for Purchaser or any other person or entity. Seller shall in no event be responsible for any failure to comply with such law or regulation resulting from the location, use, operation or maintenance of the Product or from alteration of the Product by personnel other than those employed by Seller or from an option or accessory to the Product which was available to Purchaser but omitted at Purchaser's direction, or from design or instructions furnished by Purchaser or its agents. All standards promulgated with respect to noise or air control are specifically excluded hereunder.

3. **Title, Risk of Loss, Security Interest** Title and risk of loss or damage to the Product shall pass to Purchaser under tender of delivery F.O.B. Point of Shipment by Seller unless expressly stipulated otherwise, regardless of when partial or final payment is to be made by Purchaser. Notwithstanding the foregoing, a purchase money security interest in the Product or any replacement thereof shall remain in Seller, regardless of mode of attachment to realty or other property, until full payment has been made therefore and collected by Seller.

4. **Inspection, Rejection, Remedy** Purchaser shall have the right to reasonable inspection of the Product after delivery to destination, which inspection shall be completed within ten (10) days of the date of delivery to destination. Any rejection by Purchaser as to part or all of the Product shall be in writing, specifically stating the non-conformities thereof. In such event, Seller shall have a reasonable period of time to determine the validity of and, if necessary, to correct, the non-conformities forming the basis of the Purchaser's rejection or, at Seller's option and if appropriate, to replace part or all of the Product. Purchaser's failure to make rejection as herein stated, or to allow Seller to cure Purchaser's objections, shall be deemed to conclusively establish acceptance by Purchaser of the Product.

5. **Time, Force Majeure** Seller may, from time to time, quote delivery dates to Purchaser. Such dates shall be interpreted as estimated and in no event shall such dates be construed as falling within the meaning of "time is of the essence." Seller shall not be liable for loss, damage, detention, or delay due to war, riots, civil insurrection or acts of the common enemy, fire, flood, severe weather conditions at Seller's premises or outside fabrication sites, strikes or other labor difficulties, acts of civil or military authority including governmental law, orders, priorities or regulations, acts of Purchaser, embargo, car shortage, wrecks or delay in transportation, inability to obtain necessary labor, materials or manufacturing facilities from usual sources, faulty forgings or castings, or other causes beyond the reasonable control of Seller. In the event of delay in performance due to any such cause, the date of delivery or time for completion shall be adjusted to reflect the actual length of time necessary to properly reflect the delay without change to the purchase price. In the event of such delay or default in delivery, Seller shall complete work in progress and/or make delivery as soon as reasonably practicable. Upon completion and delivery of the Product to Purchaser, after such delay in delivery, the obligation of Purchaser for payment shall be completely reinstated.

6. **Taxes** Prices quoted by Seller do not include any federal, state or local property, license, privilege, sales, use, excise, gross receipts or other like taxes which may now or hereafter be applicable to, measured by, or imposed upon this transaction, the Product, its sale, its value, its use or any services performed in connection therewith. Such taxes shall be paid by Purchaser or, if paid by Seller, shall be itemized separately to Purchaser, who shall make prompt payment thereof to Seller.

Revision 1, created September 2005

7.1 **Limited Warranty** Subject to the exclusions contained herein, Seller warrants that the Engine Control Module and Terminal Connector Board (hereinafter referred to as "AFRC Module") shall be free of defects in material and workmanship for a period of eighteen (18) months from the date the AFRC Module is placed in operation or twenty four (24) months from the date the AFRC Module is complete and ready for shipment, whichever shall first occur, and provided Purchaser shall, within such period, notify Seller in writing of such defect(s) and fully cooperate with Seller in pursuing the remedying thereof. Should any failure to conform to this warranty be reported to Seller within said period, Seller shall, upon Purchaser's promptly notifying Seller in writing thereof, correct such nonconformity by suitable repair to the Product or, at Seller's option, furnish replacement parts F.O.B. original point of shipment provided Seller has documented that the Product was installed, maintained and operated in accordance with standard industry practices, the Sellers technical manual, and has complied with the specific recommendations of Seller respecting the Product. Accessories or other parts of the Product furnished by Seller, but manufactured by others, shall carry whatever warranty, if any, the manufacturers thereof have given to Seller and which can be passed on to Purchaser. Purchaser agrees to look solely to other such manufacturers or suppliers of such accessories or parts for any warranty, repair or product liability claims arising out of the performance, condition or use of such accessories or parts. Seller agrees to cooperate in furnishing assignments of its rights thereto to Purchaser from such manufacturers and suppliers. Seller shall not be liable for any repairs, replacements or adjustments to the Product or any costs of labor performed by Purchaser without Seller's prior written approval. Seller's warranty shall expire in the event the Product is misused, neglected or operated other than for its intended purpose. Unless specifically stated in writing, Seller makes no performance warranty of any kind respecting the Product; the effects of corrosion, erosion and normal wear and tear are specifically excluded from Seller's warranty. In the event performance warranties are expressly included, in writing, Seller's obligation shall be to correct non-conformities in the manner and for the period of time provided herein above.

7.2 **Warranty Disclaimer** **SELLER MAKES NO OTHER WARRANTY OR REPRESENTATION OF ANY KIND WHATSOEVER, EXPRESSED OR IMPLIED, EXCEPT THAT OF GOOD TITLE TO THE PRODUCT, AND ALL IMPLIED WARRANTIES, INCLUDING ANY WARRANTY OF MERCHANTABILITY AND/OR FITNESS FOR A PARTICULAR PURPOSE, ARE HEREBY DISCLAIMED.**

7.3 **Warranty Remedy** Correction by Seller of non-conformities, whether patent or latent, in the manner and for the period of time provided above, shall constitute fulfillment of all liabilities of Seller for such non-conformities, whether based on contract, warranty, negligence, indemnity, strict liability or otherwise with respect to or arising out the Product. Seller shall in no event be liable for consequential damages.

8. **Set-off** Purchaser shall not have the right to retain, back charge, or set off against any amounts which may be or become payable by it to Seller or otherwise, for amounts which Seller may allegedly or in fact owe Purchaser whether arising hereunder or otherwise.

9. **Remedies Exclusive** The remedies of Purchaser set forth herein are exclusive. The total liability of Seller with respect to the performance and other matters related to the manufacture, sale, delivery, installation, repair or technical direction thereof, whether based on contract, warranty, negligence, indemnity, strict liability or otherwise, shall in no event exceed the purchase price of the particular component of the Unit of Product upon which such liability is based, and not the aggregate of all Products covered by any agreement or document between Seller and Purchaser. Seller shall, in no event, be liable to Purchaser, any successors in interest or any beneficiary or assignee of Purchaser, for any consequential, incidental, indirect, special or punitive damages or any defect in, or failure or malfunction of, the Product or particular component of the Unit of Product, whether based upon lost goodwill, lost profits or revenue, interest, work stoppage, impairment of other goods, loss by reason of shutdown or non-operation, increased expenses of operation of Product, loss of use of power system, costs of purchase of replacement power or claims of Purchaser or customers of Purchaser for service interruption, whether or not such loss or damage is based on contract, warranty, negligence, indemnity, strict liability or otherwise. Purchaser warrants that the Product is purchased for, and will be used for, business purposes only by qualified and properly trained personnel.

10. **Governing Law – Venue** The rights and obligations of Purchaser and Seller shall be construed in accordance with and governed by the laws of the State of Oklahoma, notwithstanding any conflict of law provisions which would have the effect of making the law of another state applicable. Seller and Purchaser agree that venue respecting any and all disputes between Purchaser and Seller with regard to the Product shall be Tulsa County, Oklahoma.

11. **No Waiver** No waiver by Seller of any breach of any obligation of Purchaser set forth in the General Terms and Conditions herein shall be construed as a waiver of any succeeding breach of the same or of any covenant or condition, and in no event shall this provision itself be waived.

Revision 1, created September 2005

12. **Payment** Payment terms shall be as stated in the Contract between Seller and Purchaser. Terms of payment are net ten (10) days from date of invoice, unless otherwise agreed in writing.

13.1 **Cancellation of Contract before Delivery** A cancellation charge equal to, in the sole discretion of the Seller, not more than 25% of the original purchase price may be made for any cancellation of the Contract by Purchaser prior to Seller's delivery of the Product to Purchaser. The parties agree that such cancellation charge represents Seller's liquidated damages arising out of cancellation of the Contract in lieu of actual damages, it being understood and agreed between the parties that Seller's actual damages would be impractical or extremely difficult, time consuming and expensive to ascertain. Compliance Control's failure to impose a cancellation charge with respect to one or more cancellations by Purchaser and/or other customers shall not be deemed in any case a waiver of its right under the Contract to impose such a charge in connection with any other cancellation by Purchaser, and Purchaser may not rely on any representation of any person to the contrary.

13.2 **Returns** Subject to Purchaser's payment in advance of a restocking fee and any associated shipping and handling costs, Seller will accept return of a Product within 90 days following delivery of the Product to Purchaser if the Product is returned to Seller complete and uninstalled in new condition. The amount of such restocking fee will be determined in accordance with Seller's then current Return Material Authorization policy. Any return of a Product more than 90 days following delivery, including the terms thereof, shall be within the sole and absolute discretion of the Seller.

14. **Conflicting Provisions, Modification** In case of any conflict, the General Terms and Conditions contained herein shall supersede any and all specifications and/or other terms and conditions previously supplied by Purchaser in connection with or upon a letter of authorization, purchase order or any other agreement, as well as any custom, prior conduct or course of dealing. No agreement, oral representation or other understanding any way modifying or amending the General Terms and Conditions, or having the effect of enlarging the obligations of Seller hereunder, shall be binding upon the Seller unless such modification is clear, certain and in writing in the form of an amended letter of authorization, purchase order or other agreement duly executed by Purchaser and an authorized representative of Seller.

Revision 1, created September 2005