APPENDIX 6.5-A – HYDROLOGY AND HYDRAULICS CALCULATIONS

HYDROLOGY & HYDRAULIC CALCULATIONS

FOR

ORANGE GROVE ENERGY, L.P.

ORANGE GROVE POWER PLANT

MUP 07 - 009

JUNE 2, 2008

PREPARED BY:

16041 Foster P.O. BOX 1000
Stilwell, Kansas 66085-1000
(913) 681-2881

Sega Project No. 07-0098

Table of Contents

Topic	Page(s)
Introduction …….……...……..	3
Existing Development ……..……..…..…….	3
Proposed Development ……..……...	4
Stormwater Detention Basin Requirements……...	5
Proposed Stormwater Detention Basin……..	7
Existing West Drainage Channel…….……..	8
Proposed North Drainage Channel..……..	9
Secondary Access Road Drainage Channels…...……..	9
Maintenance Plan, Erosion, and Siltation BMP's….…….……..…..	10
Conclusion….....……..	10
References:	11

- Site Location & Project Vicinity Map
- USDA/NRCS National Cooperative Soil Survey
- FEMA FIRM Map
- USGS Topographic Quadrangle – Pre and Post-Development
- Grading and Drainage Plan Drawing - C300
- Drainage Area Map Drawing - C400
- Flood Control Facilities Map (Scale - 1:24,000)
- San Diego Region RWQCB Map and
- San Luis Rey River Region Watershed Map
- Site Layout Plan Drawing - C100 and Impervious Areas Calculations
- FlowMaster 2005 Drainage Worksheets
    - North Drainage Channel
    - Secondary Access Road Drainage Ditches
    - Proposed Concrete Bridge (100-year W.S.)
    - Site Storm Drains Circular Pipes
    - Detention Basin Outlet Circular Orifice
- WinTR-55 Storm Data Spreadsheet (50-year & 100-year Storm)
    - Site Pre- and Post-Development Discharge
    - TR-20 Pre- and Post-Development Runoff Volumes
- Backwater Analysis Excel Spreadsheet and FlowMaster
    - Hydraulic & Energy Grade Lines (Graph)
- County of San Diego Hydrology Manual – Rainfall Isopluvial Maps

Introduction and Pre-Development Condition

Orange Grove Energy, L.P.'s proposed Orange Grove Power Plant (OGPP) is located in Unincorporated San Diego County (SDC) west of Pala, California 92059 about 0.1 miles north of the intersection of State Road 76 (Pala Road or SR-76) and a private road called Pala Del Norte Road. The 8.5 acre proposed project site is located on approximately 202 acres of property owned by San Diego Gas & Electric (SDG&E) in San Diego County, California in Section 29, Township 9 South, Range 2 West (Please refer to the Site Location and Project Vicinity Map in the Reference section for details). The site will utilize two leased areas during the construction of the project. The 8.5 acre northern leased area (APN 110-072-26) will be the location of the proposed site. The southern leased area (APN 110-370-01) is 8.0 acres, and will be the staging, pre-assembly, construction parking, and storage area during construction and after construction will be returned to its existing condition. An existing storage yard is included on the southern leased area and will be utilized for construction trailers.

The online USDA, NRCS, National Cooperative Soil Survey for this area of San Diego County, CA reports that this site has Las Posas stony fine sandy loam, 9 to 30 percent slopes (See Reference Soil Survey Map symbol LrE). The seasonal high groundwater table was not encountered during the geotechnical investigation. The maximum explored depth for the fourteen site borings was approximately 40.0 feet below grade (see the signed and sealed PSI Geotechnical Exploration Report for details). The parcel is designated as zone "X", which are areas determined to be outside the 500-year floodplain (and outside the 100-year floodplain), as shown on the Federal Emergency Management Agency (FEMA) Flood Insurance Rate Map (FIRM) dated June 19, 1997, for community panel number 501 of 2375 and map number 06073C0501 F (See the FEMA FIRM Map). There are no geological hazards such as landslides or rockslides identified according to the geotechnical exploration report (See signed and sealed PSI Geotechnical Exploration Report).
The San Luis Rey River is located on the opposite side of SR-76, directly south of the proposed site. The river is the receiving watershed of the stormwater runoff from both the pre-development and post-development site.

Existing Development

This area of existing SDG&E property was previously developed into a citrus orchard that is no longer in use. A majority of the proposed site and staging areas are still covered with abandoned orchard trees. The rest of the site is covered with a mixture of grass and vegetation. The 8.5 acre leased area has few existing impervious areas located on-site.

The pre-development area drains from the north to the south at approximately a ten percent (10%) slope (See the USGS Topographic Quadrangle). The existing site drains to a portion of SR-76 that does not have a ditch or culvert to channlize or route the stormwater under the road. Two existing drainage channels located on the east and west sides of the site route neighboring stormwater runoff under SR-76. Except for negligible temporary disturbance for trenching and backfilling associated with the transmission and gas pipeline installation, both drainage channels will remain undisturbed throughout construction.

The first of the two channels; the West Channel is located between the proposed development and Pala Del Norte Road. The West Channel is fed by existing culvert pipes of various sizes (14”- 24”) which route drainage from the northern mountains across Pala Del Norte Road. Once the drainage reaches SR-76 the runoff is routed underneath by an 18” corrugated metal culvert pipe. No existing stormwater calculations were available for review.

The second channel; the East Channel, is located on the east side of the proposed development approximately 250 linear feet east of the proposed east property line. The East Channel also routes stormwater runoff under SR-76 through a 24” corrugated plastic culvert pipe. The pipes outlet into an existing former sand and gravel quarry located on the Pala Band of Mission Indians property on the south side of SR-76.

The quarry is located within Flood Zones A and X which are “special flood hazard areas inundated by the 100-year flood” and “Areas of 500-year flood; areas of 100-year flood with average depths of less than 1 foot or with drainage areas less than 1 square mile; and areas protected by levees from 100-year flood” (See References for FEMA FIRM Map). Ultimately, the quarry outlets into the San Luis Rey River (See References for the Drainage Area Map). Two existing earth ridges, one located on the south side of the existing SDG&E maintenance/storage yard and the other located 300 feet west of the existing East Drainage Channel route the proposed existing site drainage between the earth ridges. These earth ridges collect pre-development stormwater runoff between them and route over SR-76. The stormwater then travels through the former quarry to the San Luis Rey River.

Proposed Development

The proposed Orange Grove Power Plant will be located on an 8.5 acre leased area. The plant area (the area located inside the fence) will include a switchyard area and the power plant turbine area including service building and various structures. Inside the proposed turbine plant area six (6) inches of crushed rock surface will be utilized instead of topsoil. The plant area loose rock is installed for reasons concerning electrical safety but it also improves the drainage characteristics of the property by slowing the runoff flow velocity. The surrounding site will be landscaped and constructed at 3:1 maximum slope. The proposed Stormwater Detention Basin is located on the south and down stream side of the proposed development. The basin will be utilized as an extended dry detention basin. The basin will be grass lined and discharge at less than the pre-development discharge rate. These hydrology and hydraulic calculations are to show that the proposed Stormwater Management System will be adequate for the proposed site.

The site has two proposed access drives, one from Pala Del Norte Road and the other from State Road 76 (Pala Road or SR-76). The Pala Del Norte Road access drive will be the main entrance and includes a bridge spanning the existing West Drainage Channel. Existing stormwater culvert pipes located under Pala Del Norte Road will remain undisturbed. These pipes route runoff from the northern mountains into the West Channel. The bridge will allow for the 100-year storm event to flow under the deck with a minimum of one foot of freeboard (see the FlowMaster 2005 Worksheets for the Proposed Concrete Bridge). A concrete approach apron will be constructed

between the bridge and the existing asphalted Pala Del Norte Road. Similarly, the SR-76 access drive will be located approximately 930 feet east of the existing intersection of Pala Del Norte Road and SR-76. This access drive entrance will be constructed of concrete pavement approximately 50 feet in length. All additional roads will be constructed of 18 inches of crushed rock surface including inside and out of the plant area. The two access drives will connect inside the plant area. All road widths, radii, and other requirements will be in accordance with California Fire Code, the San Diego - North County Fire Protection District, and the Orange Grove Power Plant Fire Protection Plan.

To adequately control water quality on-site, a combination of Site Design, Source Control, and Treatment Control Best Management Practices (BMPs) will be utilized for the Orange Grove Power Plant project based on the Caltran's BMP Handbook and SDG&E's BMP Handbook. The Orange Grove Power Plant project will implement stormwater treatment BMPs that will remove anticipated pollutants of concern from off-site discharge by routing the 50-year stormwater through the proposed storm drains and into the Stormwater Detention Basin located in the southeast side on the northern leased area (Please refer to the Grading and Drainage Plan Drawing).

The proposed drainage area for the detention basin is 5.2 acres, which includes the switchyard area, the power plant turbine block and supporting equipment, service building, and the detention basin area. When the planned construction is complete, the plant area will have approximately 43,500 SF of impervious foundation additions for various structures. In addition, there will be 7,500 SF of impervious area for access drive entrances which will not be located inside of the detention basin drainage area. Thus, the proposed drainage area of 5.2 acres will have a total impervious area of 43,500 SF (1.0 acres, 11.76 % of the parcel) (See the References for the Impervious Area Map and Calculations).

Stormwater Detention Basin Requirements

The proposed Stormwater Detention Basin will detain the stormwater runoff for a 5.2 acre drainage area. This area includes all areas inside the plant area fence yard, the detention basin area, and the north berm area (See the Drainage Area Map in the References). Stormwater runoff will be captured in the plant area by six stormwater grate area inlets. Both the grate inlets and storm drains are designed for 100-year storm event. The stormwater runoff will be routed into the detention basin for treatment. The inlets will be double San Diego Regional Standard No. D-15 grate inlets. The detention basin will detain the 100-year stormwater runoff and outlet at less than the pre-development discharge rate. The pre-development discharge rate will be controlled with a 12" diameter outlet pipe.

The San Diego Regional Water Quality Control Board (RWQCB) has jurisdiction within San Diego County. The Regional Boards issue the municipal Stormwater permits in California. These boards have water and stormwater jurisdiction on construction and development sites in California. The Orange Grove Power Plant is located in region 9, the San Diego RWQCB (See References for San Diego RWQCB Map). The site stormwater indirectly discharges into the San Luis Rey River located south of the proposed site (See the San Luis Rey River Watershed Map). The County of

San Diego – Stormwater Standards Manual requires that Priority Projects meet stormwater management system design criteria. The stormwater management system will meet both the quality and quantity requirements defined in the County of San Diego Stormwater Standards Manual, the 2003 San Diego County Hydrology Manual, and the 2005 San Diego County Drainage Design Manual. Accordingly, the proposed Detention Basin will detain both the quality and quantity volumes for the 100-year design storm event.

Required Quality Volume

The Design Treatment Control BMP standards for stormwater runoff is the primary control variable for designing Treatment Control BMPs. This design volume is for small, more frequent storm events. The runoff volume quality requirement ($V_{quality}$) is produced from the 24-hour 85th percentile storm event, as determined from the local historical rainfall (See County of San Diego Stormwater Standards Manual - *Appendix A to the Watershed Protection, Stormwater Management and Discharge Control Ordinance*, Amended August 2003). The Runoff Coefficient "C" was determined from the various proposed land modifications including impervious area, vegetation, and rock surface additions (See Table 3-1 Runoff Coefficients for Urban Areas from the County of San Diego Hydrology Manual Dated June 2003 page 3-6). The depth of rainfall "I" was determined to be 0.83 inches (San Diego County Hydrology Manual *Department of Public Works Flood Control Section* - Appendix E 85th Percentile Precipitation Isopluvial Map, Revised June, 2003). The Treatment Control BMP design volume is:

- $V_{quality}$ = C*I*A
- Runoff Coefficient Impervious Areas = 0.85 acres, C = .95
  Crushed Rock Surface Areas = 2.55 acres, C = 0.35
  Grassy Areas = 1.8 acres, C = 0.51

$$C = \frac{(0.80\text{ acres})(0.95) + (1.8\text{ acres})(0.51) + (2.60\text{ acres})(0.35)}{5.2\text{ acres}} = 0.50$$

- $V_{quality}$ = (0.50)*(0.83 inches)*(5.2 acres)*(1 ft/12 in)*(43,560 ft^2/ 1 acre)
  - **$V_{quality}$ = 7,833 cubic feet**

The required stormwater quality volume will be retained in the proposed detention basin. Below the inlet and outlet stormwater pipes will be a one foot sediment storage depth for anticipated erosion and sediment control. The depth will be maintained by riprap lining the bottom on the detention basin according to the San Diego County Drainage Design Manual and the Water Quality Management Plan (WQMP) Requirements.

Required Quantity Volume

The required quantity for the Orange Grove Power Plant Stormwater Detention Basin will be the stormwater runoff from the 24-hour, 100-year storm event with an outlet control structure

which will release stormwater at the pre-development discharge rate. The discharge values were calculated using the computer program Technical Release 55 (TR-55) and the Rational Method. TR-55 utilizes the U.S. Soil Conservation Service (SCS) runoff equation method to calculate the peak rate of discharge. The input requirements for calculating the peak discharge is the time of concentration, the drainage area, the rainfall distribution, the runoff curve number, and the 24-hour rainfall. The storm rainfall data was determined from the San Diego County Hydrology Manual. Runoff curve numbers characterize the properties for a particular soil and ground cover. A calculated runoff curve number of 76 was utilized for the pre-development areas and a curve number of 83 for post-development areas. All impervious area additions to the post-development site were given a 98 runoff curve number. The time of concentration was determined using TR-55 by defining the length and type of flow, the slope, and Manning's number for the pre- and post-development areas. The 24-hour, 100-year storm pre-development discharge is 12.68 cubic feet per second (cfs) and the post-development discharge to the detention basin is 14.66 cfs.

The volume required for detention was calculated by utilizing TR-55. In addition to the discharge output the program also calculates the stormwater runoff volume. The pre and post-development peak inflow for the 24-hour, 50 and 100-year design storm occurs at the 10th hour. The post-development runoff quantity volumes for the 50-year and 100-year storms are 68,445 and 77,165 cubic feet, respectively (See WinTR-20 Pre-and Post Development Stormwater Runoff Amounts). The total required 100-year storage volume for the Stormwater Detention Basin is:

- **$V_{quality}$ + $V_{quantity}$ = 7,833 cubic feet + 77,165 cubic feet = 85,000 cubic feet**
    - **Thus, $V_{req'd}$ = 85,000 cubic feet**

<u>Proposed Stormwater Detention Basin</u>

The detention basin volume will be detained in the proposed Stormwater Detention Basin before discharging at the pre-development discharge. The Stormwater Detention Basin will be a 0.5 acre 11.0 foot deep basin. The bottom elevation of the detention basin is 402.0'. The side slopes of the basin will be 3:1 and the basin will be surrounded with a security fence and a 10' maintenance road. Access to the bottom of the detention basin for maintenance will be on the northwest corner of the basin (See the detailed Grading and Drainage Drawings). The 10' maintenance road will allow for access to the storm drain outlet structure or detention basin inlet structure, detention basin outlet structure, and the stormwater emergency outlet overflow structure. Because the proposed detention basin will be utilized for both water quality and flood control, it would be classified as a "conjunctive use basin" according to the Drainage Design Manual. The total storage volume available for the Stormwater Detention Basin is (not including one foot of freeboard):

- $V_{Available}$ = **85,650 cubic feet > $V_{req'd}$ so OK!**

The basin inlet structure or storm drain outlet pipe will be a 24" RCP with a flared end section. The pipe will discharge stormwater runoff from six grate area inlets located throughout the plant area. The proposed storm drains will have the capacity to drain the 50-year and 100-year storm event. The detention basin outlet control structure will release discharge at less than the pre-development rate of 11.28 cfs. Prior to inletting into the grate structures, stormwater will be treated over 6" of loose crushed rock (Class II Aggregate). The rock will act as the initial treatment BMP before being discharged into the detention basin. During the 100-year storm event, stormwater runoff will pond inside the development fenced area.

Proposed Outlet Control

The detention basin outlet pipe (12") is sized for less than the pre-development discharge rate at 11.28 cfs (See Outlet Circular Orifice Worksheet). The Stormwater Detention Basin 100-year storm water surface elevation is 412.4'. If water rises above the 412.4' elevation, the stormwater is directed outside of the detention basin through the emergency overflow structure. The structure will discharge at the post-development 100-year discharge rate (27.86 cfs) for the 5.2 acre drainage area. The emergency outlet control structure maximum discharge is 32.63 cfs. The outlet control pipe will channel the stormwater runoff through the emergency overflow structure. Downstream of the emergency overflow structure, the pipe size will increase to 36" to handle storm events larger than the 100-year storm event if needed. All runoff exiting the detention basin will be routed to the proposed west secondary entrance road drainage ditch. The outlet pipe will discharge at 11.28 cfs for a 100-year storm and 39.51 cfs for storm events greater the 100-year storm. The velocities for the outlet pipe are 7.09 ft/s and 9.83 ft/s, respectively. All inlet and outlet pipes on-site are equipped with riprap as energy dissipaters. Table 7-1 of the 2005 San Diego County Drainage Design Manual was utilized for the riprap design parameters.

The stormwater outlet pipe is located outside the top of bank of the Secondary Access Road drainage ditches. The outlet pipe will discharge into a proposed riprap energy dissipater on the west side of the access road.

Proposed On-site North Drainage Channel

The proposed Orange Grove Power Plant North Drainage Channel will be constructed to direct stormwater drainage, from the north side and upstream areas, around the developed area of the site and into the West Drainage Channel. The North Drainage Channel will add no additional stormwater runoff area to the West Drainage Channel. The West Drainage Channel drainage area will be modified in shape but will have no change to the channel. Post-development will have approximately 1.5 acres from the North Drainage Channel routed into the West Drainage Channel; having no net area increase to the existing ditch. The North Channel drainage from the existing 10% slope and the proposed 3:1 slope will be channeled into a two foot deep, five foot wide drainage channel. The channel will be grass lined with 3:1 side slopes and be located outside of the fence line of the development area. The channel will route stormwater runoff into the existing West Drainage Channel, underneath the proposed bridge, and ultimately beneath SR-76. Pre-

development stormwater runoff is routed into the West Drainage Channel or directly across SR-76. The North Drainage Channel is designed to handle the 100-year storm event, a stormwater discharge of 12.75 cfs allowing one foot of freeboard.

Existing West Drainage Channel

The existing West Drainage Channel collects stormwater runoff from areas upstream (north and northwest) of the proposed site location. Multiple existing stormwater culvert pipes are routed into the existing channel underneath Pala Del Norte Road and range from 14 to 24 inches in diameter. There are no proposed modifications to the existing culvert pipes. A proposed concrete bridge approximately 40 feet wide and 60 feet long will span the West Drainage Channel and will be utilized as the main entrance to the proposed site. The bridge will be constructed outside of the top of bank and intersect with Pala Del Norte Road between two sets of existing culvert pipes. The 100-storm event will pass below the bridge (see the FlowMaster 2005 Worksheets for the Proposed Concrete Bridge).

The proposed development will route the area north of the site into that drainage ditch; having no net area increase to the existing West Drainage Channel (See the USGS Topographic Quadrangle – Pre and Post-Development Maps). An outlet culvert pipe for the West Drainage Channel, located at the intersection of Pala Del Norte Road and SR-76, drains stormwater from north to south underneath SR-76. The outlet culvert pipe is an 18" Corrugated Metal Pipe. It drains into the existing former quarry and ultimately into the San Luis Rey River.

Secondary Access Road Drainage Ditches

The Orange Grove Power Plant access drive located off SR-76 will have drainage ditches located on either side. This secondary/emergency road will be utilized during construction as an alternate entrance until the bridge construction is complete for the Pala Del Norte Road access drive. This road will be 30 feet wide and will be constructed of 18 inches of crushed loose rock (Class II Aggregate). The entrance of the secondary road will be constructed of concrete. The secondary road will have ditch channels on both sides. The ditches are designed for the 100-year storm event with a 3 foot bottom and 3:1 side slopes. The west and east ditches discharge at 6.72 cfs and 12.56 cfs, respectively. During the 100-year storm event the water elevation in the channels are 0.31 feet and 0.45 feet in depth (See the FlowMaster Worksheets for the Secondary Access West/East Trapezoidal Channels). The west channel will be two foot deep and at a channel slope of ten percent. Likewise, the east ditch will have similar parameters as the west ditch but will only be one foot in depth. A larger depth was required for the west ditch to provide one foot of freeboard to channel the detention basin stormwater runoff. The detention basin outlet pipe will be 36 inches in diameter and outlet above the top of bank. Riprap will be lined from the outlet location to the secondary road and utilized as the energy dissipation. The two ditches will be connected by an 18" reinforced concrete culvert pipe under the road entrance near State Road 76. All other ditch segments will be grassed lined and maintained with silt fencing and cross barriers located every 50 feet during construction.

The Secondary Access Road Drainage Ditches will route no additional stormwater runoff south toward SR-76. The detention basin will control the stormwater runoff added from the proposed equipment and other impervious area additions. The detention basin will outlet into the west secondary access road ditch at approximately the pre-development discharge rate (11.28 cfs). The velocity for the 100-year storm event will be 14.36 ft/s and will be controlled with 3.0 foot, one ton stone riprap (See Table 7-1 of the County of San Diego Drainage Design Manual).

Maintenance Plan, Erosion, and Siltation BMPs

The Orange Grove Power Plant will meet the minimum requirements for construction and permanent BMPs. Construction BMPs will be utilized throughout the scheduled timeframe of the construction project to the maximum extent practicable. Erosion and sediment control will be implemented during construction by silt fences and fiber rolls accompanied with cross barriers (check dams) made from sand bags which will border all sides of the project site. Silt fences will also be implemented around any stockpiling of soil during grading and excavation. Permanent erosion and sediment controls will also be implemented by utilizing drainage channels, soil berms, landscaping, crushed rock surfaces, and ditches. Riprap will be utilized at all inlet and outlet structures for erosion control. These BMP measures were taken to route stormwater runoff around the proposed development and to minimize surrounding site impacts. The Stormwater Detention Basin's outlet control structure and overflow structure will act as the structural BMP's for stormwater drainage and release runoff to the proposed drainage channel on the east side of the site.

The Orange Grove Power Plant will have routine equipment maintenance required to maintain a sufficient operating facility. The Orange Grove Energy, L.P. Design Department will be notified if any problems arise, such as standing water in the power plant area. A Design Department representative will make a field check and then determine the best course of action to correct the problem. The site non-structural and structural BMPs will be routinely inspected, cleaned, and maintained on an annual basis according to San Diego County, the Stormwater Management Plan (SWMP), and the San Diego RWQCB.

Conclusion

The area inlets, pipes, and Stormwater Detention Basin will be adequate as the Orange Grove Power Plant surface water management system. Storm drains will route the 50-year and 100-year storm event to the detention basin. The stormwater will be discharged off-site at the 100-year pre-development discharge rate and will detain the 100-year storm event. Permanent BMPs will be utilized during the life of the project. Thus, the surface water management system meets all requirements for the San Diego RWQCB and the County of San Diego.

REFERENCES

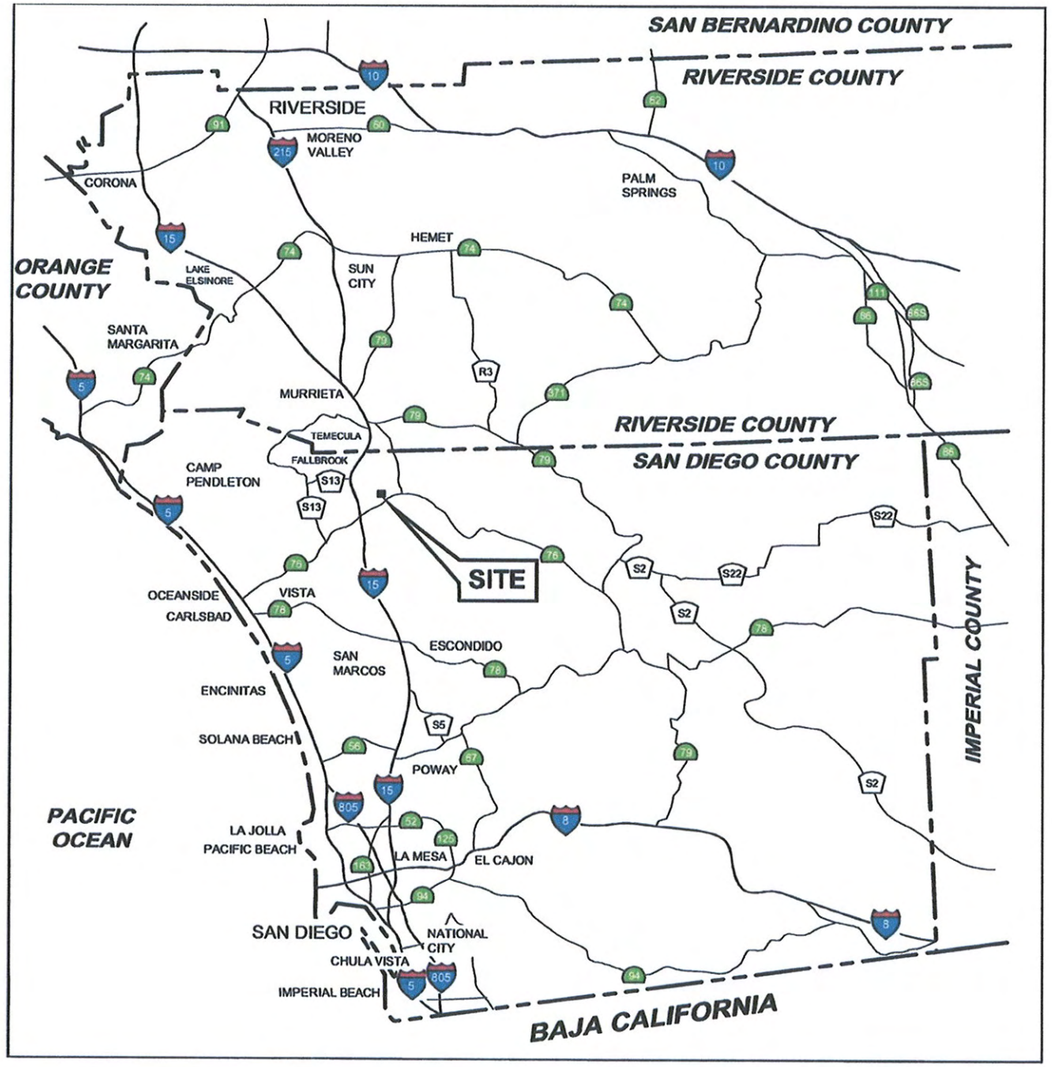

N

0 10 20 30 40 MILES

SCALE IN MILES

SITE LOCATION MAP

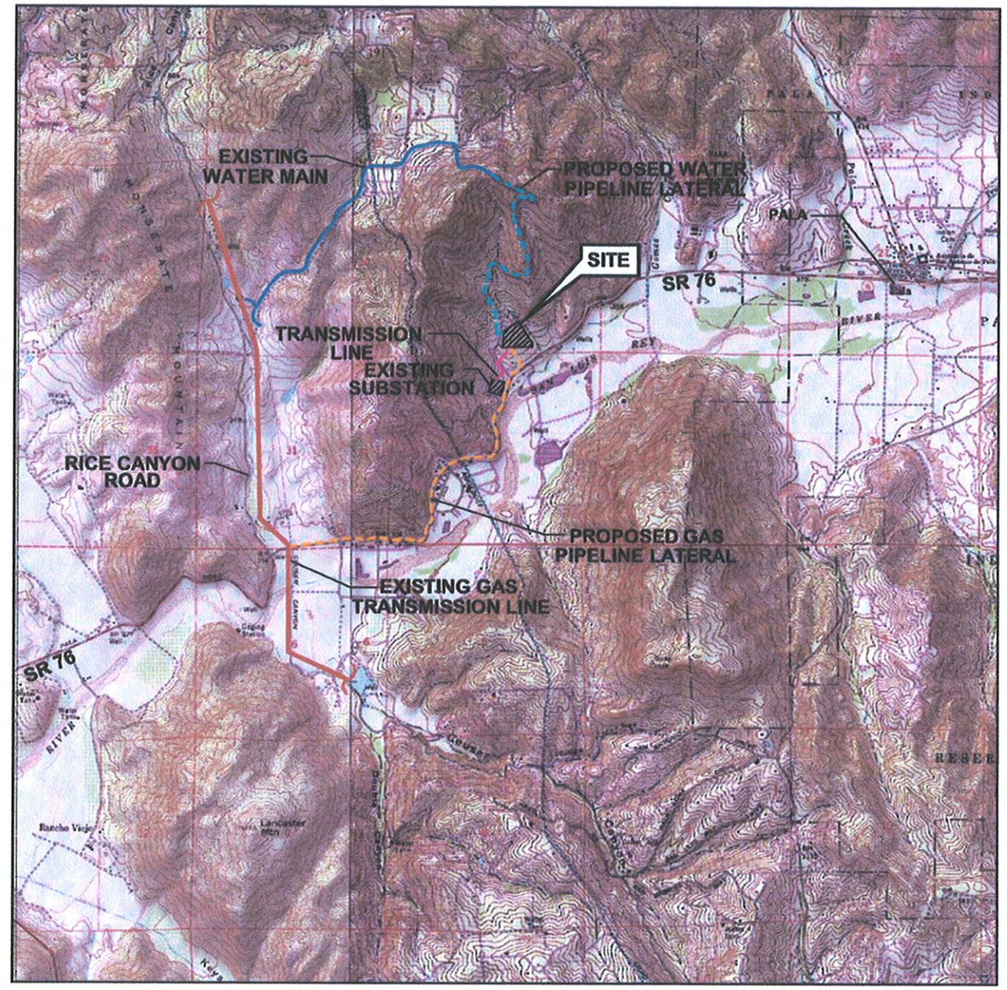

N

0 1/2 1 1 1/2 2 MILES

SCALE 1:48,000

SOURCE:

United States Geological Survey
7.5 Minute Topographic Map, 2000:
Pala, Bonsall, Temecula,
and Pechanga Quadrangles

PROJECT VICINITY MAP

Sega

Engineers - Architects - Technicians
Design - Construction - Field Service

16041 Foster
P.O. Box 1000
Stilwell, KS 66085-1000

ORANGE GROVE ENERGY L.P.
Schaumburg, IL

MUP 07-009

FIGURE 1
ORANGE GROVE POWER PLANT
SITE LOCATION AND PROJECT VICINITY MAP

DESIGN BY: J. LANGEL	CHECKED BY:
DRAWN BY: J. CLAUSSEN	DATE: 11-28-07
CLIENT I.D.	SEGA PROJECT NO. 07-201
FILE NAME: OG_site_vicinity.mxd	
DRAWING NO.	REV.

Soil Map–San Diego County Area, California
(Orange Grove Power Plant)

MAP LEGEND

Area of Interest (AOI)

Area of Interest (AOI)

Soils

Soil Map Units

Special Point Features

Blowout

Borrow Pit

Clay Spot

Closed Depression

Gravel Pit

Gravelly Spot

Landfill

Lava Flow

Marsh

Mine or Quarry

Miscellaneous Water

Perennial Water

Rock Outcrop

Saline Spot

Sandy Spot

Severely Eroded Spot

Sinkhole

Slide or Slip

Sodic Spot

Spoil Area

Stony Spot

Very Stony Spot

Wet Spot

Other

Special Line Features

Gully

Short Steep Slope

Other

Political Features

Municipalities

Cities

Urban Areas

Water Features

Oceans

Streams and Canals

Transportation

Rails

Roads

Interstate Highways

US Routes

State Highways

Local Roads

Other Roads

MAP INFORMATION

Original soil survey map sheets were prepared at publication scale. Viewing scale and printing scale, however, may vary from the original. Please rely on the bar scale on each map sheet for proper map measurements.

Source of Map: Natural Resources Conservation Service
Web Soil Survey URL: http://websoilsurvey.nrcs.usda.gov
Coordinate System: UTM Zone 11N

This product is generated from the USDA-NRCS certified data as of the version date(s) listed below.

Soil Survey Area: San Diego County Area, California
Survey Area Data: Version 5, Jan 4, 2007

Date(s) aerial images were photographed: 10/2/1995

The orthophoto or other base map on which the soil lines were compiled and digitized probably differs from the background imagery displayed on these maps. As a result, some minor shifting of map unit boundaries may be evident.

Map Unit Legend

San Diego County Area, California (CA638)			
Map Unit Symbol	**Map Unit Name**	**Acres in AOI**	**Percent of AOI**
LrE	Las Posas stony fine sandy loam, 9 to 30 percent slopes	22.1	76.1%
LrG	Las Posas stony fine sandy loam, 30 to 65 percent slope s	0.2	0.8%
StG	Steep gullied land	5.7	19.7%
TuB	Tujunga sand, 0 to 5 percent slopes	1.0	3.5%
Totals for Area of Interest (AOI)		29.0	100.0%

NATIONAL FLOOD INSURANCE PROGRAM
FLOOD EMERGENCY MANAGEMENT AGENCY FLOOD INSURANCE RATE MAP
SAN DIEGO COUNTY CALIFORNIA AND INCORPORATED AREAS

MUP 07-009

APPROXIMATE SCALE IN FEET
500 0 500

SITE BOUNDARY

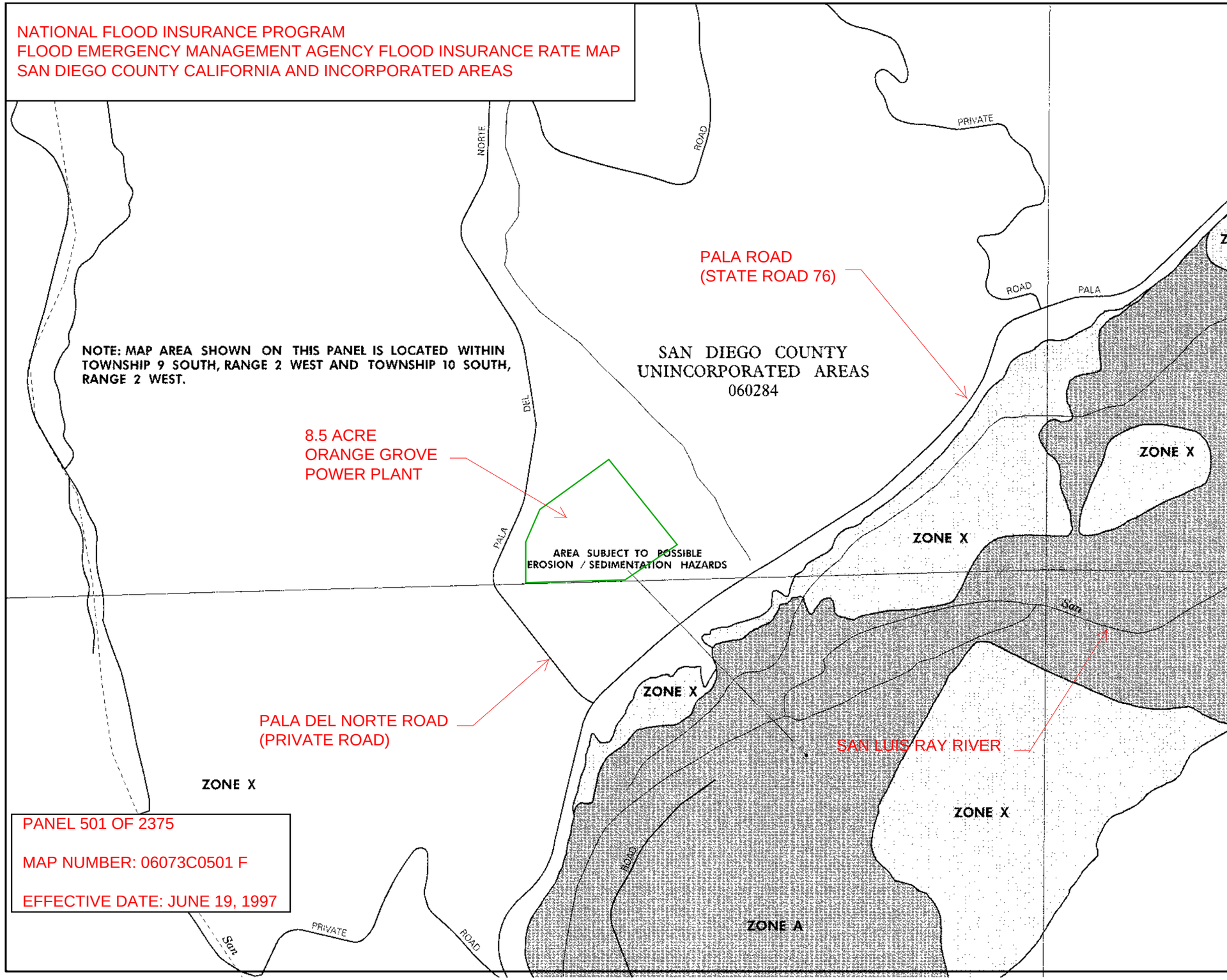

PANEL 501 OF 2375

MAP NUMBER: 06073C0501 F

EFFECTIVE DATE: JUNE 19, 1997

LEGEND

SPECIAL FLOOD HAZARD AREAS INUNDATED BY 100-YEAR FLOOD

ZONE A No base flood elevations determined.

ZONE AE Base flood elevations determined.

ZONE AH Flood depths of 1 to 3 feet (usually areas of ponding); base flood elevations determined.

ZONE AO Flood depths of 1 to 3 feet (usually sheet flow on sloping terrain); average depths determined. For areas of alluvial fan flooding, velocities also determined.

ZONE A99 To be protected from 100-year flood by Federal flood protection system under construction; no base elevations determined.

ZONE V Coastal flood with velocity hazard (wave action); no base flood elevations determined.

ZONE VE Coastal flood with velocity hazard (wave action); base flood elevations determined.

FLOODWAY AREAS IN ZONE AE

OTHER FLOOD AREAS

ZONE X Areas of 500-year flood; areas of 100-year flood with average depths of less than 1 foot or with drainage areas less than 1 square mile; and areas protected by levees from 100-year flood.

OTHER AREAS

ZONE X Areas determined to be outside 500-year floodplain.

ZONE D Areas in which flood hazards are undetermined.

UNDEVELOPED COASTAL BARRIERS

Identified 1983 | Identified 1990 | Otherwise Protected Areas

Coastal barrier areas are normally located within or adjacent to Special Flood Hazard Areas.

Flood Boundary

Floodway Boundary

Zone D Boundary

Boundary Dividing Special Flood Hazard Zones, and Boundary Dividing Areas of Different Coastal Base Flood Elevations Within Special Flood Hazard Zones.

513 — Base Flood Elevation Line; Elevation in Feet. See Map Index for Elevation Datum.

D — D Cross Section Line

This is an official copy of a portion of the above referenced flood map. It was extracted using F-MIT On-Line. This map does not reflect changes or amendments which may have been made subsequent to the date on the title block. For the latest product information about National Flood Insurance Program flood maps check the FEMA Flood Map Store at www.msc.fema.gov

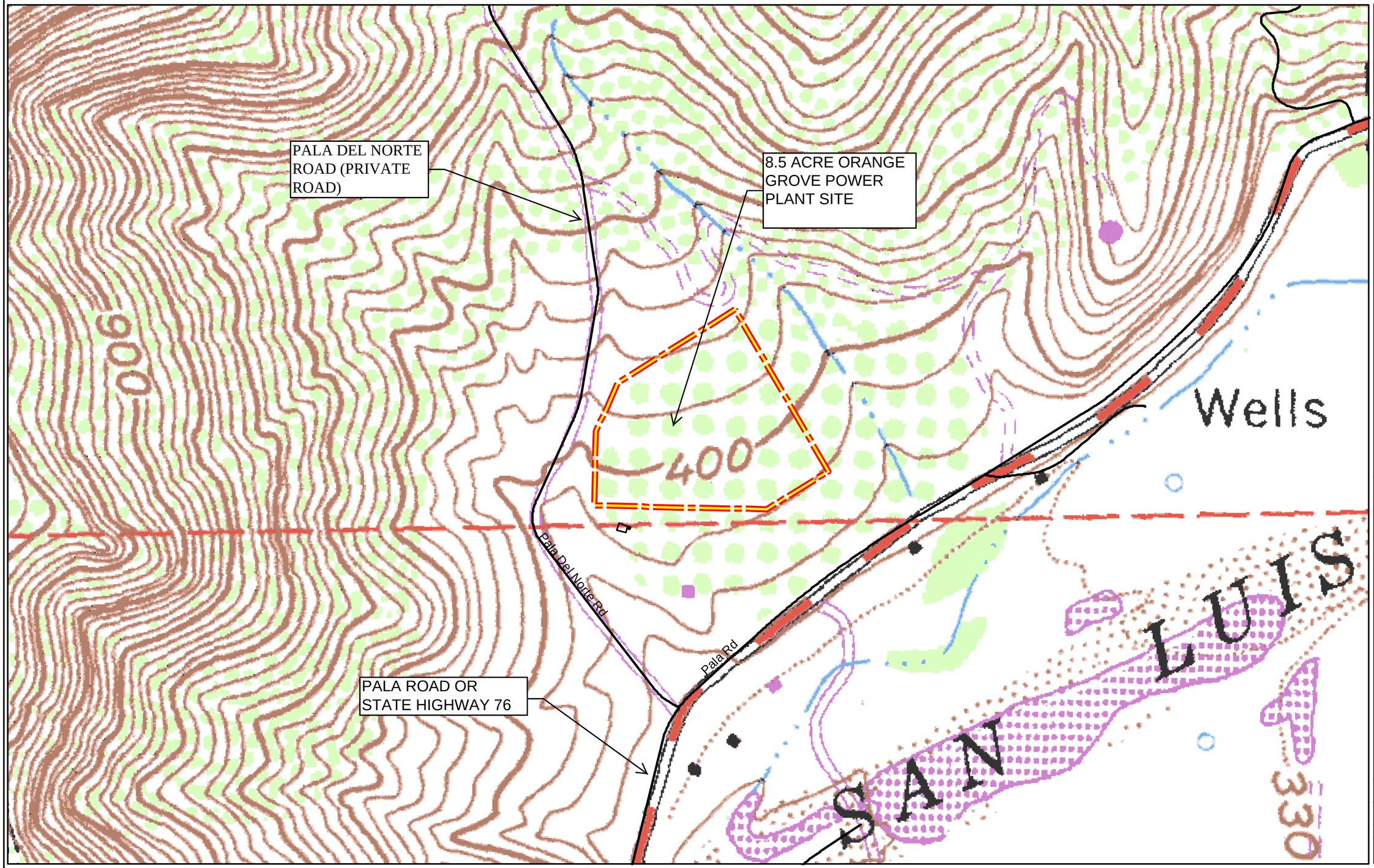

Legend

Site Boundary

Roads

N W E S

0 50 100 150 200 400

Feet

Sega

Engineers - Architects - Technicians
Design - Construction - Field Service

16041 Foster
P.O. Box 1000
Stilwell, KS 66085-1000

ORANGE GROVE ENERGY L.P.
Schaumburg, IL

MUP 07-009

FIGURE 3
ORANGE GROVE POWER PLANT

USGS TOPOGRAPHIC QUADRANGLE

DESIGN BY: J. LANGEL	CHECKED BY:
DRAWN BY: J. CLAUSSEN	DATE: 11-28-07
CLIENT I.D.	SEGA PROJECT NO. 07-201
FILE NAME: OG_topo.mxd	
DRAWING NO.	REV.

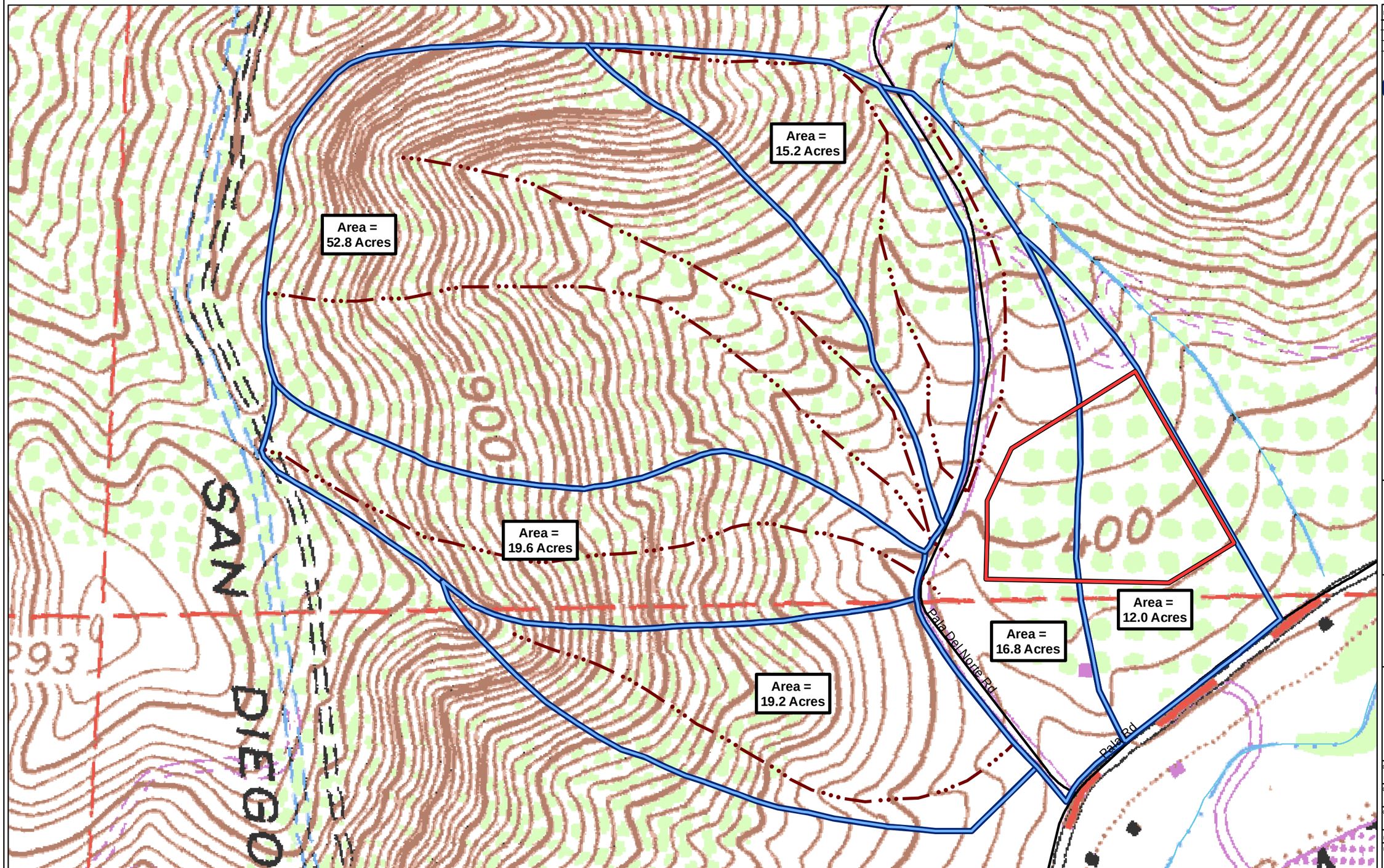

REV.	DATE	DESCRIPTION	DWN	CHK
A	6-11-07	ISSUED FOR REVIEW	JAC	WHR
B	6-12-07	ISSUED FOR REVIEW	JMQ	WHR

Legend

- Drainage Areas
- Drainage Path
- Site Boundary
- USGS Drainage (Blue Line)

N W E S

0 50 100 150 200 400
Feet

Sega

Engineers - Architects - Technicians
Design - Construction - Field Service

16041 Foster
P.O. Box 1000
Stilwell, KS 66085-1000

ORANGE GROVE ENERGY L.P.
Schaumburg, IL

MUP 07-009

FIGURE 4
ORANGE GROVE PROJECT
PRE-DEVELOPMENT DRAINAGE AREA MAP

DESIGN BY: J. LANGEL	CHECKED BY:
DRAWN BY: J. CLAUSSEN	DATE: 3-05-2008
CLIENT I.D.	SEGA PROJECT NO. 07-098
FILE NAME: pre_drainage.mxd	
DRAWING NO.	REV. D

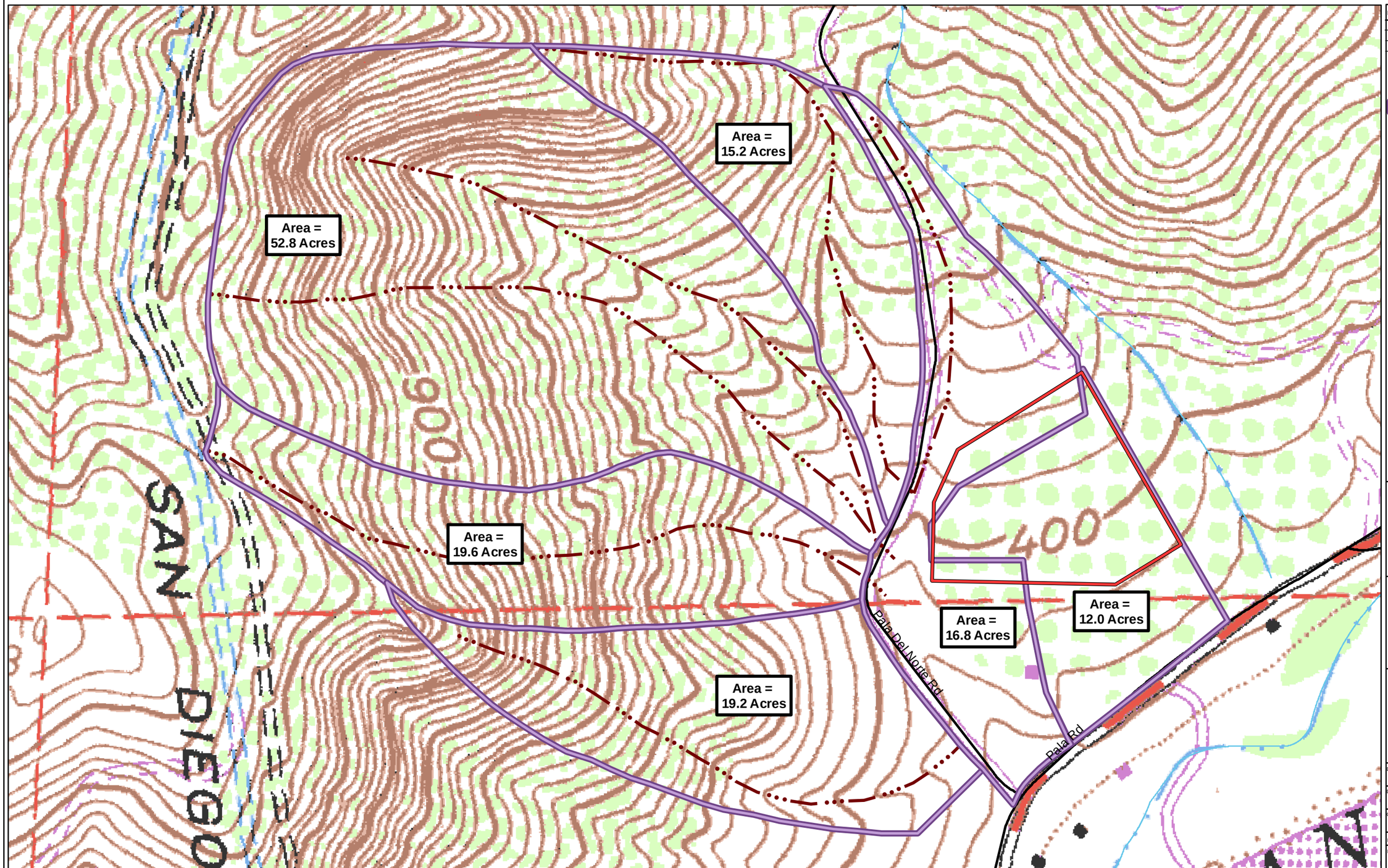

REV.	DATE	DESCRIPTION	DWN	CHK
A	6-11-07	ISSUED FOR REVIEW	JAC	WHR
B	6-12-07	ISSUED FOR REVIEW	JMQ	WHR

Legend

- Site Boundary
- Drainage Areas
- Drainage Path
- USGS Drainage (Blue Line)

N W E S

0 50 100 150 200 400
Feet

Sega®
Engineers - Architects - Technicians
Design - Construction - Field Service

16041 Foster
P.O. Box 1000
Stilwell, KS 66085-1000

ORANGE GROVE ENERGY L.P.
Schaumburg, IL

MUP 07-009

FIGURE 5
ORANGE GROVE PROJECT
POST-DEVELOPMENT DRAINAGE AREA MAP

DESIGN BY: J. LANGEL	CHECKED BY:
DRAWN BY: J. CLAUSSEN	DATE: 3-05-2008
CLIENT I.D.	SEGA PROJECT NO. 07-098
FILE NAME: post_drainage.mxd	
DRAWING NO.	REV. D

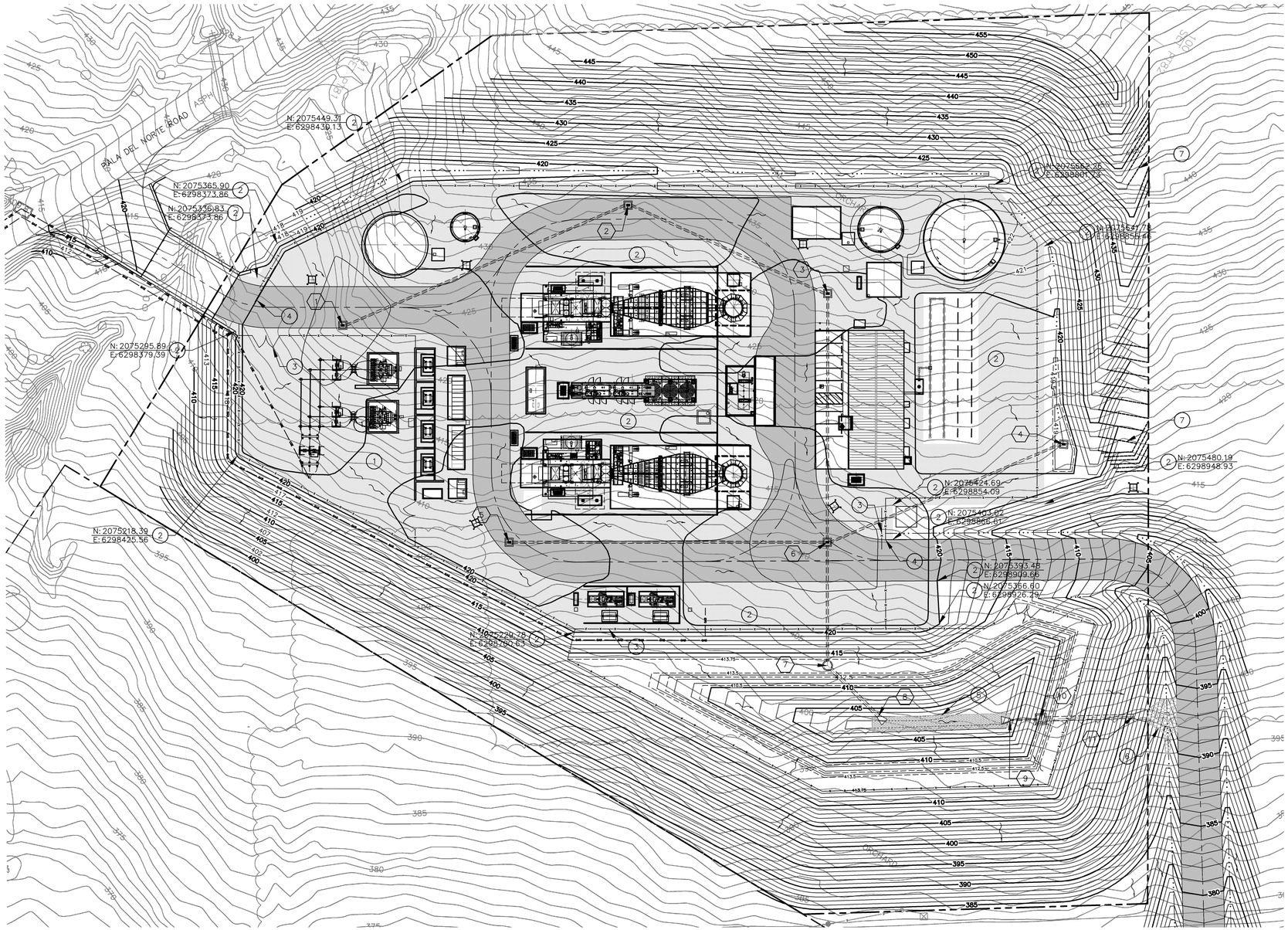

GRADING AND DRAINAGE PLAN

PLAN NORTH IS 29°55'46" CCW OF TRUE NORTH

40 0 40 80

SCALE IN FEET

CIVIL KEYNOTES:

1. INSTALL 6" CRUSHED ROCK SURFACE INSIDE SUBSTATION FENCE.
2. INSTALL 6" CRUSHED ROCK SURFACE INSIDE COMBUSTION TURBINE AREA FENCE.
3. INSTALL SITE SECURITY CHAINLINK FENCE WITH 30' MANUAL SLIDE GATES, SEE SITE DETAILS DWG. C801.
4. INSTALL 30' SLIDE GATE WITH GATE OPERATOR AND LOOP DETECTOR. COORDINATE WITH OWNER'S SECURITY CONSULTANT.
5. INSTALL MIN. 2.3' 1/2 TON STONE RIPRAP.
6. INSTALL MIN. 3.0' 1 TON STONE RIPRAP.
7. FILL AREA EAST OF LANDSCAPING BERM FOR EXCESS CUT, MIN. 3' FROM PROPERTY LINE.

GRADING NOTES:

1. ALL CONSTRUCTION SHALL MEET THE STANDARDS AND SPECIFICATIONS OF THE COUNTY OF SAN DIEGO, CALIFORNIA, LATEST EDITION.
2. ALL STORM SEWER LINES SHALL BE CLASS III RCP.
3. PIPE LENGTHS EXCLUDE END SECTIONS AND ARE MEASURED ALONG CENTERLINE OF PIPE FROM CENTER OF INSIDE FACE TO CENTER OF INSIDE FACE OF STRUCTURES.
4. MATCH GRADES AT EXISTING IMPROVEMENTS.
5. SLOPES SHALL BE MADE AT 3:1 MAXIMUM GRADE.
6. EROSION CONTROL STRUCTURES (SEE EROSION CONTROL PLAN DWGS. C500 & C502) SHALL BE CONSTRUCTED PRIOR TO GRADING ACTIVITIES.
7. DRAINAGE CHANNELS SHALL BE MINIMUM 3' FLAT BOTTOM AND SHALL HAVE 3:1 SIDE SLOPES.
8. NORTHING AND EASTING COORDINATES FOR MANHOLES, AREA INLETS, FIELD INLETS, AND JUNCTION BOXES ARE MEASURED TO CENTER OF STRUCTURE.
9. NORTHING AND EASTING COORDINATES FOR END SECTIONS ARE MEASURED TO FARTHEST EDGE OF THE END SECTION AT PIPE CENTERLINE.

STORM DRAINAGE NOTES:

(1) N:2075338.34
E:6298444.48
INSTALL 4X4 AREA INLET
TOP EL. = 418.4'
FLOWLINE OUT (N) = 412.4
INSTALL 220 L.F. 15" DIA.
CLASS III RCP @ 0.5% SL.
TO STRUCTURE 2

(2) N:2075516.99
E:6298579.87
INSTALL 4X4 AREA INLET
TOP EL. = 419.0'
FLOWLINE IN (S) = 411.3
FLOWLINE OUT (E) = 410.8
INSTALL 154 L.F. 18" DIA.
CLASS III RCP @ 0.5% SL.
TO STRUCTURE 3

(3) N:2075533.88
E:6298737.01
INSTALL 4X4 AREA INLET
TOP EL. = 419.25'
FLOWLINE IN (W) = 410.0
FLOWLINE OUT (SE) = 409.5
INSTALL 175 L.F. 18" DIA.
CLASS III RCP @ 1.5% SL.
TO STRUCTURE 6

(4) N:2075524.83
E:6298939.55
INSTALL 4X4 AREA INLET
TOP EL. = 418.75'
FLOWLINE OUT (SW) = 412.25
INSTALL 181 L.F. 15" DIA.
CLASS III RCP @ 0.5% SL.
TO STRUCTURE 6

(5) N:2075262.68
E:6298627.25
INSTALL 4X4 AREA INLET
TOP EL. = 419.0'
FLOWLINE OUT (NE) = 412.5'
INSTALL 225 L.F. 15" DIA.
CLASS III RCP @ 0.5% SL.
TO STRUCTURE 6

(6) N:2075377.85
E:6298826.72
INSTALL 4X4 AREA INLET
TOP EL. = 418.25'
FLOWLINE IN (W) = 411.35'
FLOWLINE IN (NE) = 411.35'
FLOWLINE IN (NW) = 406.85'
FLOWLINE OUT (SE) = 406.35'
INSTALL 84 L.F. 24" DIA.
CLASS III RCP @ 2.0% SL.
TO STRUCTURE 7

(7) N:2075300.64
E:6298871.50
INSTALL STD. 6' DIA. MANHOLE TOP
EL. 413.75'
FLOWLINE IN (NW) = 404.6'
FLOWLINE OUT (SE) = 404.0'
INSTALL 49 L.F. 30" DIA
CLASS III RCP @ 2.5% SL.
TO STRUCTURE 8

(8) N:2075287.29
E:6298921.76
INSTALL TO DETENTION BASIN
CLASS III RCP FLARED END SECTION
FLOWLINE OUT (SE) = 403.0'

(9) N:2075332.50
E:6299005.70
INSTALL DETENTION BASIN OUTLET FLARED END SECTION
FLOWLINE IN (E) = 403.0'
INSTALL 20 L.F. 12" DIA
CLASS III RCP @ 1.0% SL.
TO STRUCTURE 10

(10) N:2075344.26
E:6299024.69
INSTALL STORMWATER OUTLET CONTROL STRUCTURE TOP EL. 414.0'
100 YR INLET EL. 412.5'
FLOWLINE IN (E) = 402.80'
FLOWLINE OUT (W) = 400.00'
INSTALL 64 L.F. 36" DIA
CLASS III RCP @ 1.0% SL.
TO STRUCTURE 11

(11) N:2075379.51
E:6299081.66
INSTALL CLASS III RCP FLARED END SECTION
FLOWLINE OUT (W) = 398.35'

LEGEND

- FOUND MONUMENT AS NOTED
- SET 1" IRON PIPE WITH "PSOMAS" PLUG UNLESS NOTED OTHERWISE
- PROPERTY LINE
- 400 EXISTING CONTOUR
- 380 PROPOSED MAJOR CONTOUR
- 383 PROPOSED MINOR CONTOUR
- PROPOSED GAS LINE
- PROPOSED UNDERGROUND ELECTRICAL
- EXISTING ELECTRIC LINE
- EXISTING TELEPHONE (COMMUNICATIONS) LINE
- PROPOSED RCP STORMWATER PIPE
- EXISTING T&D LINE
- EXISTING FENCE
- EXISTING ROAD
- PROPOSED FENCE
- PARCEL LINE
- DRAINAGE PATH (FLOWLINE)
- EXISTING ORCHARD LINE
- PROPOSED RIPRAP
- PROPOSED CRUSHED ROCK SURFACE
- PROPOSED CRUSHED ROCK PAVEMENT
- PROPOSED CONCRETE
- PROPOSED NATIVE GROUND COVER
- PROPOSED LANDSCAPING
- DIRECTION OF FLOW
- EXISTING WINDMILL
- EXISTING OVERHEAD ELECTRICAL LINES

REV.	DATE	DESCRIPTION	DWN	CHK
A	10-11-07	ISSUED PRELIMINARY TO PSWSI	BGG	WHR
B	10-19-07	ISSUED FOR REVIEW	BGG	WHR
C	11-26-07	RE-ISSUED FOR REVIEW	BGG	WHR
D	11-30-07	ISSUED FOR MILESTONE 4	BGG	WHR
E	12-19-07	ISSUED FOR AMENDED SPPE APPLICATION	BGG	WHR
F	12-28-07	RE-ISSUED FOR MILESTONE 4	BGG	WHR
G	02-29-08	FINAL ISSUE FOR APPROVAL	BGG	WHR
H	6-2-08	ISSUED FOR AFC PERMIT	BGG	MJB

Sealed Only When Signed in Blue Ink

Sega®
Engineers – Architects – Technicians
Design – Construction – Field Service
16041 Foster
P.O. Box 1000
Stilwell, Kansas 66085-1000

ORANGE GROVE ENERGY L.P.
Schaumburg, IL

ORANGE GROVE POWER PLANT

GRADING AND DRAINAGE PLAN

DESIGN BY: J. LANGEL	CHECKED BY: B. ROMINES
DRAWN BY: B. GASPERS	DATE: 9-12-07
CLIENT I.D. ICC00101	SEGA PROJECT NO. 07-201
CADD FILE NAME: 07201-C300.dwg	
DRAWING NO. C300	REV. H

DRAINAGE AREA MAP

N

100 0 100 200

SCALE IN FEET

KEY:

(EX)	–	EXISTING STRUCTURES
CI	–	CURB INLET
SI	–	CURB INLET IN SUMP
DI	–	SINGLE DROP INLET
DI–2	–	DOUBLE DROP INLET
ES	–	PREFABRICATED END SECTION
JB	–	JUNCTION BOX
YI	–	YARD INLET
AI	–	AREA INLET
MH	–	MANHOLE
R	–	REDUCER
FI	–	FIELD INLET
BEND	–	PREFABRICATED VERTICAL BEND
T.D.	–	TRENCH DRAIN
G.I.	–	GRATE INLET
O.C.	–	DETENTION OUTLET CONTROL STRUCTURE
RCP	–	REINFORCED CONCRETE PIPE
CMP	–	CORREGATED METAL PIPE (STEEL)
CP	–	CULVERT PIPE

DESIGN NOTES:

(a) TIME OF CONCENTRATION
15 MINUTES MAX.
5 MINUTES MIN.

(b) PIPE LENGTHS EXCLUDE END SECTIONS AND ARE MEASURED ALONG CENTERLINE OF PIPE FROM CENTER OF INSIDE FACE TO CENTER OF INSIDE FACE OF STRUCTURES.

(c) MANNING'S ROUGHNESS COEFFICIENT = 0.013 (CONCRETE)

LEGEND

- FOUND MONUMENT AS NOTED
- SET 1" IRON PIPE WITH "PSOMAS" PLUG UNLESS NOTED OTHERWISE
- PROPERTY LINE
- 400 EXISTING CONTOUR
- 380 PROPOSED MAJOR CONTOUR
- 383 PROPOSED MINOR CONTOUR
- PROPOSED GAS LINE
- PROPOSED UNDERGROUND ELECTRICAL
- EXISTING ELECTRIC LINE
- EXISTING TELEPHONE (COMMUNICATIONS) LINE
- PROPOSED RCP STORMWATER PIPE
- EXISTING T&D LINE
- EXISTING FENCE
- EXISTING ROAD
- PROPOSED FENCE
- PARCEL LINE
- DRAINAGE PATH (FLOWLINE)
- EXISTING ORCHARD LINE
- PROPOSED RIPRAP
- PROPOSED CRUSHED ROCK SURFACE
- PROPOSED CRUSHED ROCK PAVEMENT
- PROPOSED CONCRETE
- PROPOSED NATIVE GROUND COVER
- PROPOSED LANDSCAPING
- A = AREA IN ACRES
- B = BASIN DESIGNATION
- C = COMPOSITE RUNOFF COEFFICIENT
- D = DESIGN POINT DESIGNATION
- DRAINAGE AREA LIMITS
- PROPOSED DISTURBED AREA
- EXISTING USGS BLUELINE

DRAINAGE AREA NOTES:

(OS) DRAINAGE WILL BE ROUTED AROUND SITE BY NORTH DITCH DRAINAGE CHANNEL.

OFF–SITE DRAINAGE–NORTH CHANNEL

DEVELOPMENT STAGE	STORM DRAINAGE AREA (ACRES)	PEAK RUNOFF RATE Q (CFS)	RUNOFF COEF. C.	AVERAGE CHANNEL VELOCITY V (FT/S)	AVERAGE DEPTH ELEVATION (FT.)
50 YEAR DESIGN STORM					
PRE–DEV.	3.0	6.75	0.3	2.75	420.77
PRE–DEV.	3.0	11.25	0.5	3.10	420.95±
100 YEAR DESIGN STORM					
PRE–DEV.	3.0	7.65	0.3	2.87	420.16±
POST–DEV.	3.0	12.75	0.5	3.20	421.00±

1. INLET FOR DRAINAGE AREA.
2. INLET FOR DRAINAGE AREA.
3. INLET FOR DRAINAGE AREA.
4. INLET FOR DRAINAGE AREA.
5. INLET FOR DRAINAGE AREA.
6. INLET FOR DRAINAGE AREA. DRAINAGE FROM AREAS 1, 2, 3, 4, AND 5 WILL BE ROUTED VIA STORM DRAIN.
7. STORMWATER MANHOLE.
8. STORM DRAIN OUTLET AND DETENTION BASIN INLET STRUCTURE.
9. DETENTION BASIN OUTLET CONTROL STRUCTURE.
10. DETENTION BASIN EMERGENCY OUTLET STRUCTURE.
11. STORMWATER OUTLET.
12. SECONDARY ACCESS ROAD DITCHES.
13. AREAS SOUTH OF PARCEL LINE AND WITHIN "PROPOSED DISTURBED AREA" LINE ARE AREAS FOR "TEMPORARY CONSTRUCTION PARKING AND LAYDOWN."
14. EXISTING NATURAL WEST DRAINAGE CHANNEL.
15. EXISTING OFF–SITE CULVERT PIPES.
16. EXISTING OFF–SITE CULVERT PIPES.
17. EXISTING OFF–SITE CULVERT PIPES.
18. EXISTING OFF–SITE CULVERT PIPE.
19. EXISTING OFF–SITE CULVERT PIPE.
20. EXISTING OFF–SITE CULVERT PIPE.
21. EXISTING USGS BLUELINE OR NATURAL EAST DRAINAGE CHANNEL.

ON–SITE STORMWATER DETENTION BASIN

DEVELOPMENT STAGE	STORM DRAINAGE AREA (ACRES)	PEAK RUNOFF RATE Q (CFS)	RUNOFF CURVE. C.	DETENTION VOLUME V(FT³)	DESIGNED WATER SURFACE VOLUME (FT³)	WATER SURFACE ELEVATION (FT.)
50 YEAR DESIGN STORM						
PRE–DEV.	5.2	11.00	N/A	N/A	N/A	N/A
POST–DEV.	5.2	24.58	N/A	85,700	76,300	410.5(±)
100 YEAR DESIGN STORM						
PRE–DEV.	5.2	12.68	N/A	N/A	N/A	N/A
POST–DEV.	5.2	27.86	N/A	85,700	85,000	412.4(±)

NOTE: WATER SURFACE VOLUME DOES NOT INCLUDE ONE FOOT OF FREEBOARD.

SUMMARY OF AREAS (ACRES):

1. IMPERVIOUS AREA (INCLUDES CONCRETE ENTRANCE SECTION) – 1.00
2. CRUSHED ROCK SURFACE AREA (INCLUDES VEHICULAR AREA) – 3.22
3. DETENTION BASIN DRAINAGE AREA – 5.20
4. VEHICULAR AREA – 1.47
5. TEMPORARY CONSTRUCTION PARKING AREA AND LAYDOWN – 5.73
6. DISTURBED AREA – 14.83

50 YEAR DESIGN (PROPOSED CONSTRUCTION)

STRUCTURE		DIRECT RUNOFF						TOTAL RUNOFF	PIPE						
STRUCT NO. (Area No.)	TYPE	AREA (acres) A	RUNOFF COEF. C	C x A	K	i (in/hr)	Q (cfs)	TOTAL Q (CFS)	PIPE NO.	PIPE SIZE DIA. (inches)	PIPE SLOPE %	PIPE LENGTH (LF)	PIPE CAP. (CFS)	VELOCITY (ft/sec)	DEPTH OF FLOW (inches)
1	AI	0.90	0.52	0.47	1.1	7.5	3.86								
								3.86	1	15	0.5	220	4.91	4.17	10.58
2	AI	0.50	0.60	0.30	1.1	7.5	2.48								
								6.34	2	18	0.5	154	7.99	4.72	12.79
3	AI	0.46	0.59	0.27	1.1	7.5	2.24								
								8.58	3	18	1.5	175	13.84	7.79	10.75
4	AI	1.00	0.48	0.48	1.1	7.5	3.96								
								3.96	4	15	0.5	160	4.91	4.19	10.79
5	AI	0.52	0.61	0.32	1.1	7.5	2.62								
								2.62	5	15	0.5	225	4.91	3.85	8.14
6	AI	0.90	0.55	0.50	1.1	7.5	4.08								
								19.24	6	24	2	84	34.41	10.65	13.42
7	MH	NA	NA	NA	NA	NA	NA								
								19.24	7	30	2.5	49	69.76	11.52	11.20
8	OC	0.90	0.72	0.65	1.1	7.5	5.35								
								24.58							
9	OC	NA	NA	NA	NA	NA	NA								
								12.68 MAX	10	12	0.5	52	11.65	14.83	FULL
10	MH	NA	NA	NA	NA	NA	NA								
								SEE D.C.	10	36	1.0	240	71.74	7.09	10.19
11	MH	NA	NA	NA	NA	NA	NA								
								SEE D.C.	12	36	1.0	280	71.74	7.09	10.19

REV.	DATE	DESCRIPTION	DWN	CHK
A	11–30–07	ISSUED FOR MILESTONE 4	BGG	WHR
B	12–28–07	RE–ISSUED FOR MILESTONE 4	BGG	WHR
C	02–29–08	FINAL ISSUE FOR APPROVAL	BGG	WHR
D	6–2–08	ISSUED FOR AFC PERMIT	BGG	MJB

Sealed Only When Signed in Blue Ink

Sega ®
Engineers – Architects – Technicians
Design – Construction – Field Service
16041 Foster
P.O. Box 1000
Stilwell, Kansas 66085–1000

ORANGE GROVE ENERGY L.P.
Schaumburg, IL

ORANGE GROVE POWER PLANT

DRAINAGE AREA MAP

DESIGN BY: J. LANGEL	CHECKED BY: B. ROMINES
DRAWN BY: B. GASPERS	DATE: 9–12–07
CLIENT I.D. ICC00101	SEGA PROJECT NO. 07–201

CADD FILE NAME: 07201–C400.dwg

DRAWING NO. C400 | REV. D

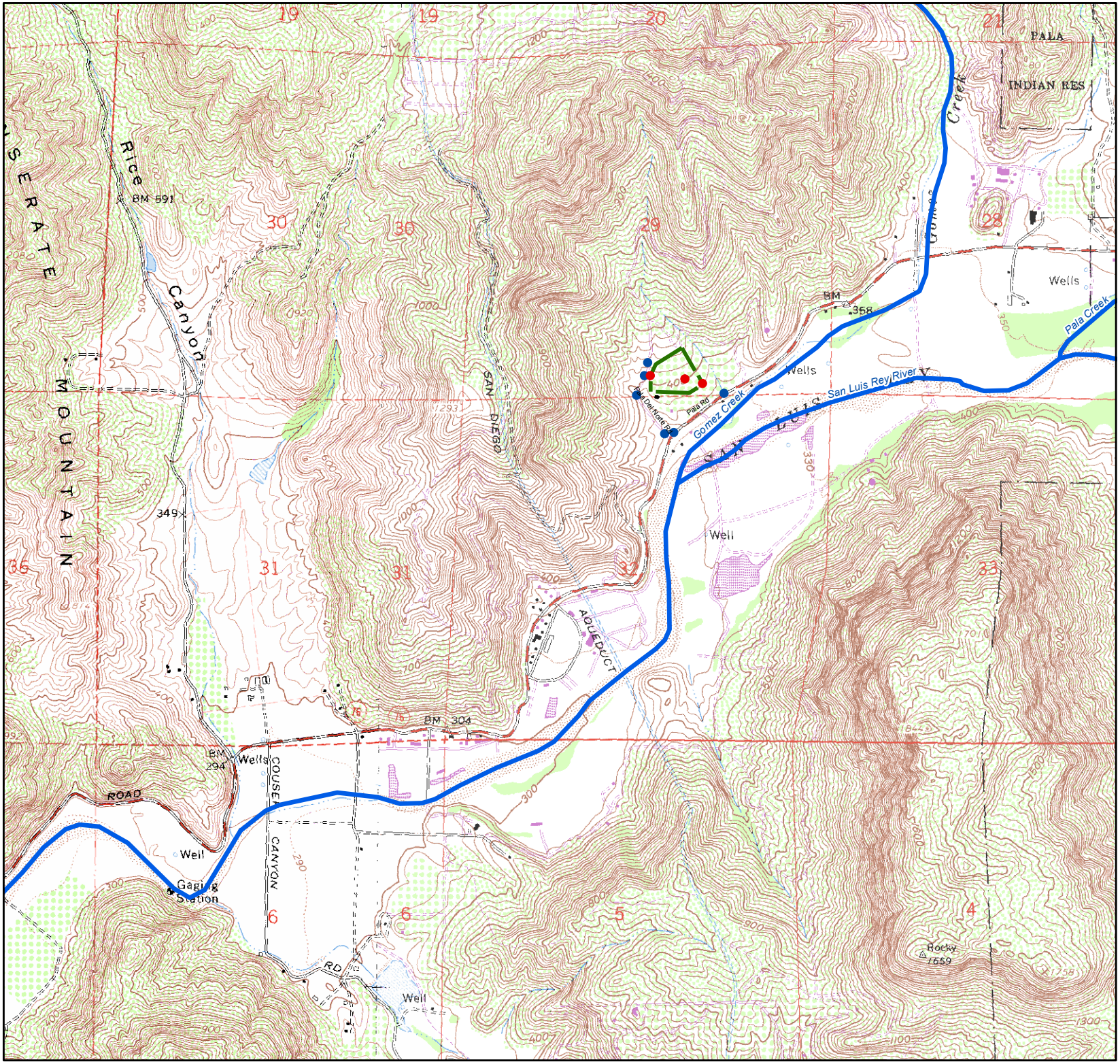

N
W E
S

0 0.125 0.25 0.5

Miles

(1:24,000)

Legend

- Site Boundary
- Rivers
- Pro. Flood Control Fac.
- Exist. Flood Control Fac.

* See Sega drawing C300 for additional site flood facilities.

ORANGE GROVE POWER PLANT FLOOD CONTROL FACILITIES

ORANGE GROVE ENERGY L.P.
Schaumburg, IL

Sega®

Engineers - Architects - Technicians
Design - Construction - Field Service

16041 Foster
P.O. Box 1000
Stilwell, KS 66085-1000

DESIGN BY: J. LANGEL	CHECKED BY: W. ROMINES
DRAWN BY: J. CLAUSSEN	DATE: 5-27-08
CLIENT I.D.	SEGA PROJECT NO. 07-098
FILE NAME: flood_control.mxd	
DRAWING NO.	REV.

REGION 9 INDEX

901.00	SAN JUAN HYDROLOGIC UNIT	908.00	PUEBLO SAN DIEGO HYDROLOGIC UNIT
901.10	Laguna HA	908.10	Point Loma HA
1.11	San Joaquin Hills HSA	908.20	San Diego Mesa HA
1.12	Laguna Beach HSA	8.21	Lindbergh HSA
1.13	Aliso HSA	8.22	Chollas HSA
1.14	Dana Point HSA	908.30	National City HA
901.20	Mission Viejo HA	8.31	El Tayan HSA
1.21	Oso HSA	8.32	Paradise HSA
1.22	Upper Trabuco HSA		
1.23	Middle Trabuco HSA	909.00	SWEETWATER HYDROLOGIC UNIT
1.24	Gobernadora HSA	909.10	Lower Sweetwater HA
1.25	Upper San Juan HSA	9.11	Telegraph HSA
1.26	Middle San Juan HSA	9.12	La Nacion HSA
1.27	Lower San Juan HSA	909.20	Middle Sweetwater HA
1.28	Ortega HSA	9.21	Jamacha HSA
901.30	San Clemente HA	9.22	Hillside HSA
1.31	Prima Deshecha HSA	9.23	Dehesa HSA
1.32	Segunda Deshecha HSA	9.24	Galloway HSA
901.40	San Mateo Canyon HA	9.25	Sequan HSA
901.50	San Onofre HA	9.26	Alpine Heights HSA
1.51	San Onofre Valley HSA	909.30	Upper Sweetwater HA
1.52	Las Pulgas HSA	9.31	Loveland HSA
1.53	Stuart HSA	9.32	Japatul HSA
		9.33	Viejas HSA
902.00	SANTA MARGARITA HYDROLOGIC UNIT	9.34	Descanso HSA
902.10	Ysidora HA	9.35	Garnet HSA
2.11	Lower Ysidora HSA		
2.12	Chappo HSA	910.00	OTAY HYDROLOGIC UNIT
2.13	Upper Ysidora HSA	910.10	Coronado HA
902.20	DeLuz HA	910.20	Otay Valley HA
2.21	DeLuz Creek HSA	910.30	Dulzura HA
2.22	Gavilan HSA	10.31	Savage HSA
2.23	Vallecitos HSA	10.32	Proctor HSA
902.30	Murrieta HA	10.33	Jamul HSA
2.31	Wildomar HSA	10.34	Lee HSA
2.32	Murrieta HSA	10.35	Lyon HSA
2.33	French HSA	10.36	Hollenbeck HSA
2.34	Lower Domenigoni HSA	10.37	Engineer Springs HSA
2.35	Domenigoni HSA		
2.36	Diamond HSA	911.00	TIJUANA HYDROLOGIC UNIT
902.40	Auld HA	911.10	Tijuana Valley HA
2.41	Bachelor Mountain HSA	11.11	San Ysidro HSA
2.42	Gerrudda HSA	11.12	Water Tanks HSA
2.43	Lower Tucalota HSA	911.20	Potrero HA
2.44	Tucalota HSA	11.21	Marron HSA
902.50	Pechanga HA	11.22	Bee Canyon HSA
2.51	Pauba HSA	11.23	Barrett HSA
2.52	Wolf HSA	11.24	Round Preserve HSA
902.60	Wilson HA	11.26	Long Potrero HSA
2.61	Lancaster Valley HSA	911.30	Barrett Lake HA
2.62	Lewis HSA	911.40	Monument HA
2.63	Reed Valley HSA	11.41	Pine HSA
902.70	Cave Rocks HA	11.42	Mount Laguna HSA
2.71	Lower Coahuila HSA	911.50	Morena HA
2.72	Upper Coahuila HSA	911.60	Cottonwood HA
2.73	Anza HSA	911.70	Cameron HA
2.74	Burnt HSA	911.80	Campo HA
902.80	Aguanga HA	11.81	Tecate HSA
2.81	Vail HSA	11.82	Canyon City HSA
2.82	Devile Hole HSA	11.83	Glover Flat HSA
2.83	Redec HSA	11.84	Hill HSA
2.84	Tule Creek HSA	11.85	Hipass HSA
902.90	Oakgrove HA		
2.91	Lower Cullo HSA		
2.92	Previtt Canyon HSA		
2.93	Dodge HSA		
2.94	Chihuahua HSA		
903.00	SAN LUIS REY HYDROLOGIC UNIT		
903.10	Lower San Luis HA		
3.11	Mission HSA		
3.12	Bonsall HSA		
3.13	Moosa HSA		
3.14	Valley Center HSA		
3.15	Woods HSA		
3.16	Rincon HSA		
903.20	Monserate HA		
3.21	Pala HSA		
3.22	Pauma HSA		
3.23	La Jolla Amago HSA		
903.30	Warner Valley HA		
3.31	Warner HSA		
3.32	Combs HSA		
904.00	CARLSBAD HYDROLOGIC UNIT		
904.10	Loma Alta HA		
904.20	Buena Vista Creek HA		
4.21	El Salto HSA		
4.22	Vista HSA		
904.30	Agua Hedionda HA		
4.31	Las Monas HSA		
4.32	Buena HSA		
904.40	Encinas HA		
904.50	San Marcos HA		
4.51	Batiquitos HSA		
4.52	Richland HSA		
4.53	Twin Oaks HSA		
904.60	Escondido Creek HA		
4.61	San Elijo HSA		
4.62	Escondido HSA		
4.63	Lake Wohlford HSA		
905.00	SAN DIEGUITO HYDROLOGIC UNIT		
905.10	Solana Beach HA		
5.11	Rancho Santa Fe HSA		
5.12	La Jolla HSA		
905.20	Hodges HA		
5.21	Del Dios HSA		
5.22	Green HSA		
5.23	Felicita HSA		
5.24	Bear HSA		
905.30	San Pasqual HA		
5.31	Highland HSA		
5.32	Las Lomas Muertas HSA		
5.33	Read HSA		
5.34	Hidden HSA		
5.35	Guejito HSA		
5.36	Vineyard HSA		
905.40	Santa Maria Valley HA		
5.41	Ramona HSA		
5.42	Lower Hatfield HSA		
5.43	Wash Hollow HSA		
5.44	Upper Hatfield HSA		
5.45	Ballena HSA		
5.46	East Santa Teresa HSA		
5.47	West Santa Teresa HSA		
905.50	Santa Ysabel HA		
5.51	Boden HSA		
5.52	Perris HSA		
5.53	Sutherland HSA		
5.54	Witch Creek HSA		
906.00	PENASQUITOS HYDROLOGIC UNIT		
906.10	Miramar Reservoir HA		
906.20	Poway HA		
906.30	Scripps HA		
906.40	Miramar HA		
906.50	Tecolote HA		
907.00	SAN DIEGO HYDROLOGIC UNIT		
907.10	Lower San Diego HA		
7.11	Mission San Diego HSA		
7.12	Santee HSA		
7.13	El Cajon HSA		
7.14	Coches HSA		
7.15	El Monte HSA		
907.20	San Vicente HA		
7.21	Fernbrook HSA		
7.22	Kimball HSA		
7.23	Grover HSA		
7.24	Barona HSA		
907.30	El Capitan HA		
7.31	Conejos Creek HSA		
7.32	Glen Oaks HSA		
7.33	Alpine HSA		
907.40	Boulder Creek HA		
7.41	Inaja HSA		
7.42	Spencer HSA		
7.43	Cuyamaca HSA		

NOTE:

1. *The names and areas shown on this map are the same as used by the Department of Water Resources (DWR) in their Bulletin 130 Series.*
2. *The numbering system used on this map is an adaption of the numbering system used in the 130 Series.*
3. *The 1986 updated names and boundaries shown on the map are in accordance with an agreement with DWR and US Geological Survey.*
4. *The 1995 revision of this map includes newly recognized hydrologic subareas within the Mission Viejo HA (901.20). Notes 1 & 3 do not apply to these subareas.*

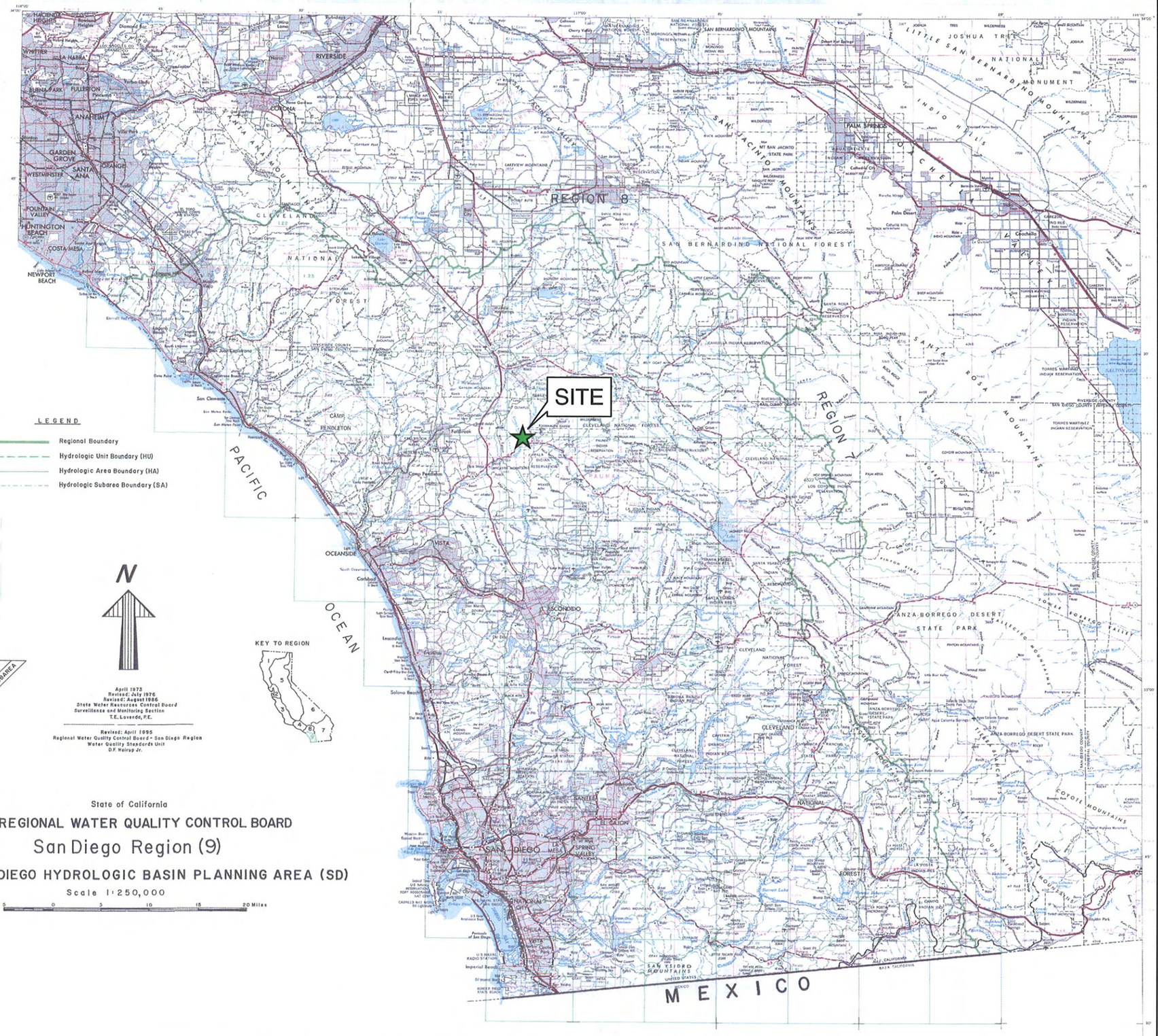

LEGEND

- Regional Boundary
- Hydrologic Unit Boundary (HU)
- Hydrologic Area Boundary (HA)
- Hydrologic Subarea Boundary (SA)

N

REGION NO. — HYDROLOGIC UNIT — HYDROLOGIC AREA — HYDROLOGIC SUBAREA
9 07 4 1

KEY TO REGION

April 1973
Revised: July 1976
Revised: August 1986
State Water Resources Control Board
Surveillance and Monitoring Section
T.E. Lovende, P.E.

Revised: April 1995
Regional Water Quality Control Board - San Diego Region
Water Quality Standards Unit
D.F. Hulrop Jr.

State of California

REGIONAL WATER QUALITY CONTROL BOARD

San Diego Region (9)

SAN DIEGO HYDROLOGIC BASIN PLANNING AREA (SD)

Scale 1:250,000

5 0 5 10 15 20 Miles

Legend

Sega

Engineers - Architects - Technicians
Design - Construction - Field Service

16041 Foster
P.O. Box 1000
Stilwell, KS 66085-1000

ORANGE GROVE ENERGY L.P.
Schaumburg, IL

MUP 07-009

FIGURE 6
ORANGE GROVE POWER PLANT

RWQCB MAP

DESIGN BY: J. LANGEL	CHECKED BY:
DRAWN BY: J. CLAUSSEN	DATE: 11-28-07
CLIENT I.D.	SEGA PROJECT NO. 07-201
FILE NAME: OG_RWQCB.mxd	
DRAWING NO.	REV.

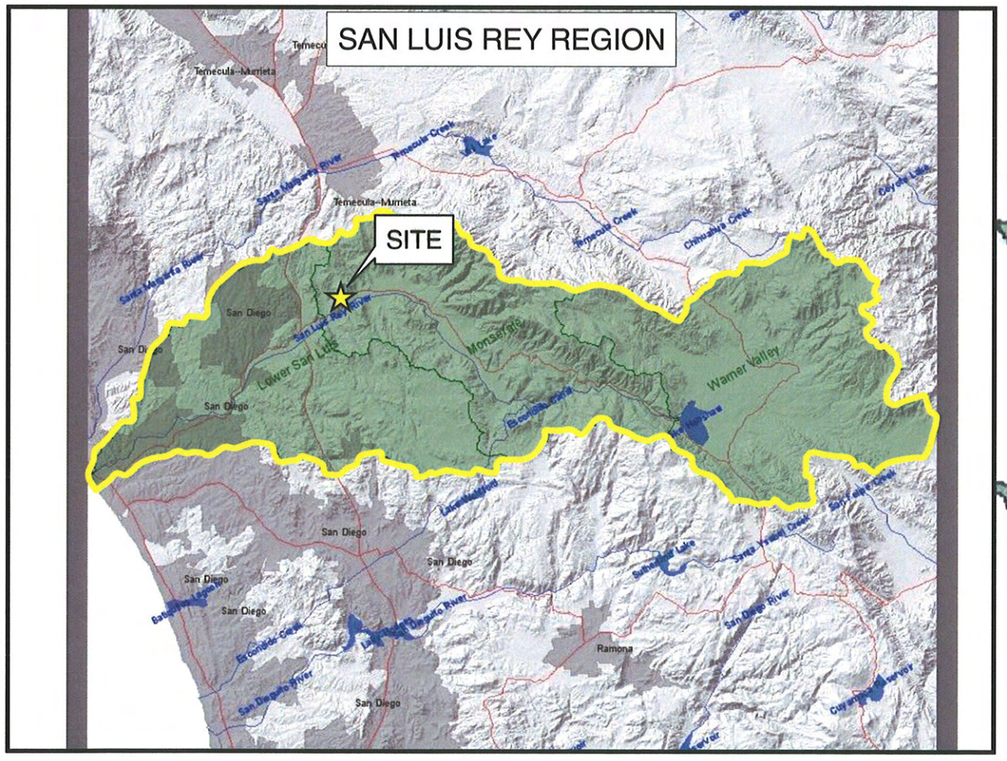

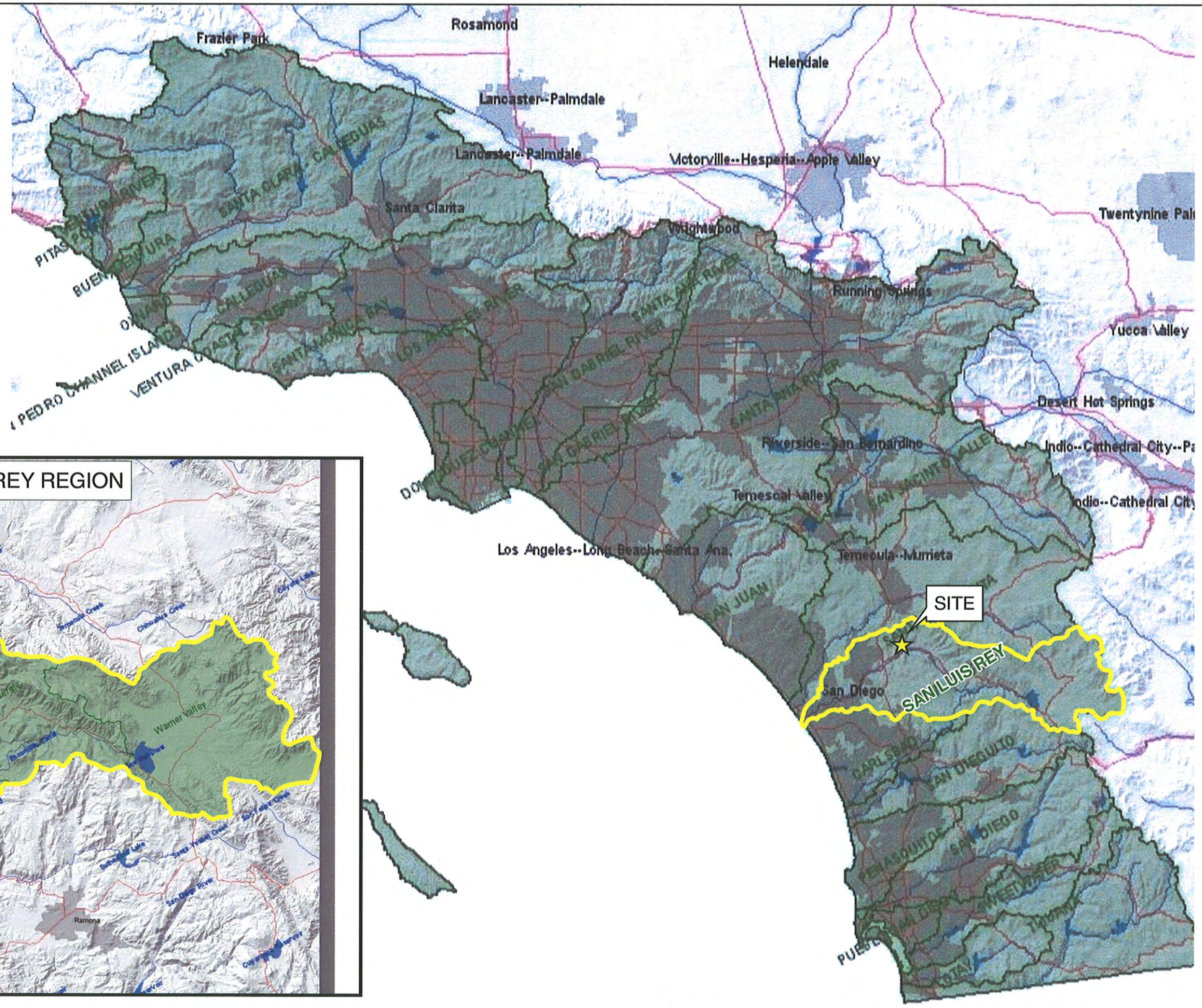

Legend

Sega

Engineers - Architects - Technicians
Design - Construction - Field Service

16041 Foster
P.O. Box 1000
Stilwell, KS 66085-1000

ORANGE GROVE ENERGY L.P.
Schaumburg, IL

MUP 07-009

FIGURE 7
ORANGE GROVE
POWER PLANT

WATERSHED MAP

DESIGN BY: J. LANGEL	CHECKED BY:
DRAWN BY: J. CLAUSSEN	DATE: 11-30-07
CLIENT I.D.	SEGA PROJECT NO. 07-201
FILE NAME: OG_Watershed.mxd	
DRAWING NO.	REV.

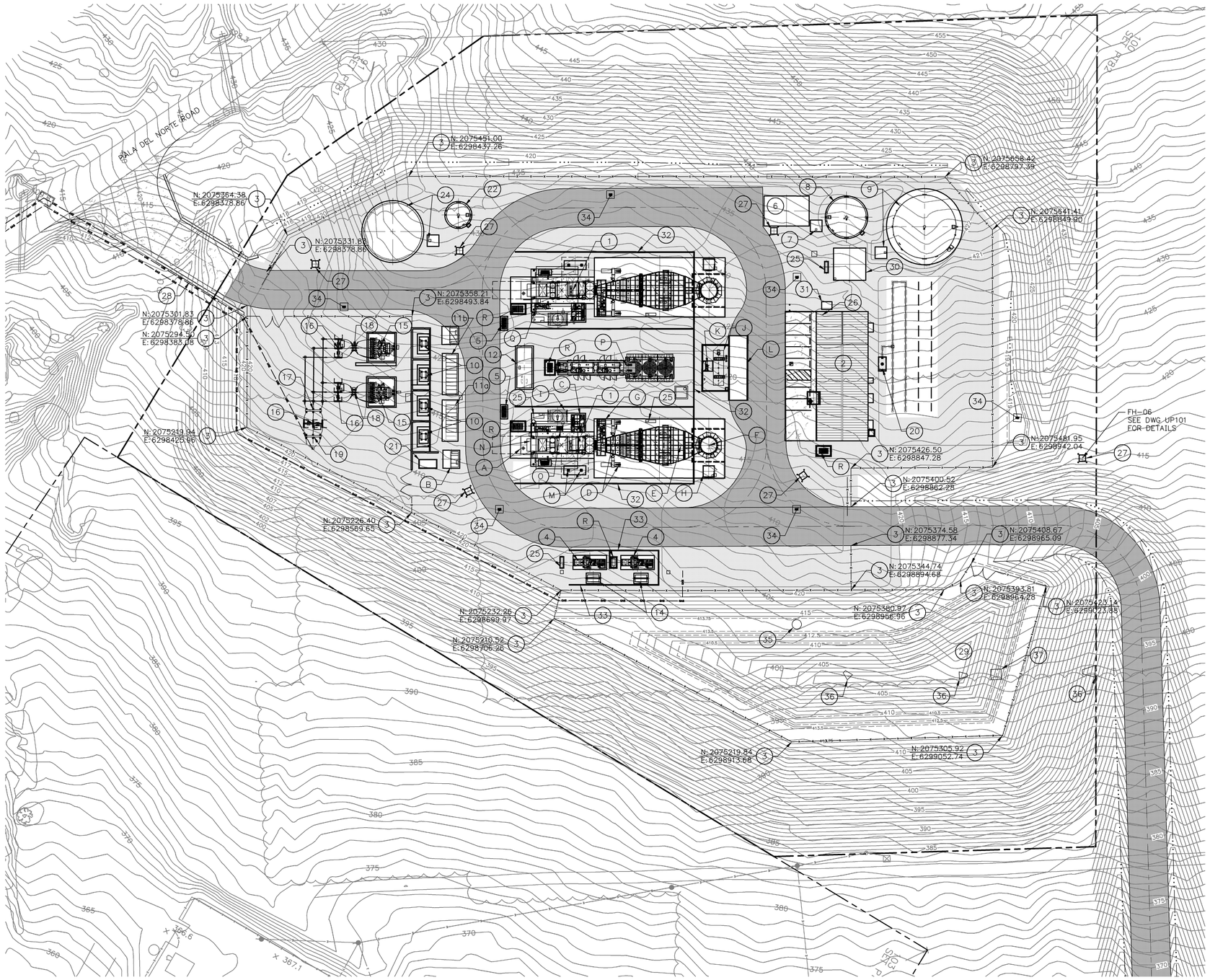

SITE LAYOUT PLAN

PLAN NORTH IS 29°55'46" CCW OF TRUE NORTH

40 0 40 80

SCALE IN FEET

EMISSION COORDINATES SYMBOL		
DESCRIPTION	NORTHING	EASTING
COMBUSTION TURBINE #1 (NORTH)	2075491	6298683
COMBUSTION TURBINE #2 (SOUTH)	2075387	6298743
DIESEL FIRE PUMP (±2')	2075517	6298766
BLACK START GENERATOR (±2')	2075379	6298582

KEYNOTES:

1. COMBUSTION TURBINE (CT), GENERATOR, AND AUXILIARY EQUIPMENT. (FOR EACH UNIT): (HEIGHT = 43' AT THE TOP OF VBV DUCT).
   - A MAIN TURBINE GENERATOR SKID ENCLOSURE.
   - B 13.8KV ELECTRICAL SWITCHGEAR.
   - C CT AUXILIARY EQUIPMENT SKID.
   - D TEMPERING AIR FANS (2).
   - E EMISSION CONTROL SYSTEM–SCR (HEIGHT = ±33').
   - F STACK (HEIGHT = 80').
   - G AMMONIA VAPORIZATION SKID.
   - H CEMS ENCLOSURE WITH TRANSFORMER AND CALIBRATION GAS STORAGE.
   - I CT LUBE OIL COOLER.
   - J AMMONIA STORAGE TANK (COMMON TO BOTH CT UNITS).
   - K AMMONIA FORWARDING PUMP SKID (COMMON TO BOTH CT UNITS).
   - L AMMONIA UNLOADING PAD, SPILL CONTAINMENT (COMMON TO BOTH CT UNITS).
   - M TURBINE REMOVAL SUPPORTS.
   - N AIR INLET FILTER (HEIGHT = 34').
   - O SPRINT SKID.
   - P INLET AIR CHILLER AND COOLING TOWER (COMMON TO BOTH CT UNITS) (HEIGHT = 30').
   - Q WATER INJECTION SKID.
   - R OILY DRAIN TANK.
2. SERVICE BUILDING FOR CONTROL ROOM, ELECTRICAL EQUIPMENT, FIRE PUMPS, COMPRESSED AIR. (HEIGHT = 18').
3. SITE SECURITY CHAINLINK FENCE AND GATES.
4. FUEL GAS COMPRESSORS.
5. GAS COALESCING FILTER SKID.
6. CONCRETE PAD FOR TEMPORARY WATER TREATMENT TRAILER.
7. DEMIN. WATER PUMP SKID AND RELATED EQUIPMENT.
8. DEMIN. WATER STORAGE TANK (HEIGHT = 24').
9. RAW WATER/FIREWATER STORAGE TANK & PUMP SKID (HEIGHT = 44').
10. AUXILIARY TRANSFORMERS.
11a. 4160V ELECTRICAL SWITCHGEAR.
11b. 480V ELECTRICAL SWITCHGEAR.
12. BLACKSTART GENERATOR.
13. NOT USED.
14. FUEL GAS COMPRESSOR RECYCLE FIN–FAN COOLER.
15. 13.8KV–69KV GENERATOR STEP–UP TRANSFORMER (GSU).
16. 69KV DISCONNECT SWITCH AND SUPPORTS.
17. 69KV CT/VT METERING UNIT.
18. 69KV CIRCUIT BREAKER.
19. 69KV TRANSITION STRUCTURE & POTHEAD.
20. UNDERGROUND SANITARY SYSTEM.
21. TRANSFORMER DELUGE VALVE ENCLOSURE.
22. WASTEWATER STORAGE TANK (HEIGHT = 24').
23. NOT USED.
24. COOLING TOWER MAKEUP TANK AND PUMP SKID (HEIGHT = 36').
25. 480V MCC.
26. DIESEL FIRE PUMP ROOM.
27. YARD FIRE HYDRANTS WITH HYDRANT MOUNT FIRE MONITORS.
28. BRIDGE.
29. STORMWATER DETENTION BASIN.
30. RO WATER TREATMENT AREA.
31. DIESEL STORAGE TANK – DIESEL FIRE PUMP.
32. GAS TURBINE SOUND WALL (HEIGHT = 48').
33. GAS COMPRESSOR SOUND WALL (HEIGHT = 24').
34. AREA INLET.
35. STORM MANHOLE.

KEYNOTES CONT.:

36. STORM END SECTION.
37. STORMWATER OUTLET CONTROL STRUCTURE.

REV.	DATE	DESCRIPTION	DWN	CHK
A	10–23–07	ISSUED FOR REVIEW	BGG	WHR
B	10–30–07	ISSUED FOR REVIEW	BGG	WHR
C	11–8–07	ISSUED FOR WESTPOWER APPROVAL	BGG	WHR
D	11–19–07	ISSUED FOR AIR MODEL	BGG	WHR
E	11–29–07	RE–ISSUED FOR AIR MODEL	BGG	WHR
F	11–30–07	ISSUED FOR MILESTONE 4	BGG	WHR
G	12–19–07	ISSUED FOR AMENDED SPPE APPLICATION	BGG	WHR
H	12–28–07	RE–ISSUED FOR MILESTONE 4	BGG	WHR
J	1–17–08	ISSUED PER FPP COMMENTS	BGG	MJB
K	02–29–08	FINAL ISSUE FOR APPROVAL	BGG	WHR
L	6–2–08	ISSUED FOR AFC PERMIT	BGG	MJB

Sealed Only When Signed in Blue Ink

Sega ®
Engineers – Architects – Technicians
Design – Construction – Field Service
16041 Foster
P.O. Box 1000
Stilwell, Kansas 66085–1000

ORANGE GROVE ENERGY L.P.
Schaumburg, IL

ORANGE GROVE POWER PLANT

SITE LAYOUT PLAN

DESIGN BY: B. ROMINES	CHECKED BY: J. BONDANK
DRAWN BY: B. GASPERS	DATE: 9–12–07
CLIENT I.D. ICC00101	SEGA PROJECT NO. 07–201

CADD FILE NAME: 07201–C100.dwg

DRAWING NO. C100 REV. L

N:\2007\07201\dwgs\ce\07201–C100.dwg 6/2/08 1:25pm bgaspers

PROPOSED FOUNDATIONS 2007

Foundation ID Number	Foundation Descriptions	Quantity	Length (feet)	Width (feet)	Total Surface Area (SF)
1	Turbine Generator (TG)	2	100	46	9200
A	Man TG Skid Enclosure	2	20.5	65	2665
B	15KV Switchgear	2	14	13	364
C	Auxiliary Skid	2	42	14.5	1218
D	Tempering Air Skid	4	On same foundation as 1		0
E	Emissions Control System - SCR	6	On same foundation as 1		0
F	Stack	2	On same foundation as 1		0
G	Ammonia Evaporation Skid	2	On same foundation as 1		0
H	Control Emissions Monitoring System (CEMS)	2	On same foundation as 1		0
I	Fin Fan Cooler Slab	2	18	14	504
J	Ammonia Storage Tank	1	26	14.5	377
K	Ammonia Forwarding Pump Skid	1	On same foundation as J		0
L	Ammonia Unloading Pad, Spill Containment	2	50	15	1500
M	Turbine Removal Supports	2	17	7	238
N	Air Inlet Filter	2	On same foundation as C		0
O	Sprint Skid	2	On same foundation as C		0
P	Inlet Air Chiller and Cooling Towers	1	13.25	5.25	70
Q	Water Injection Skid	2	28	20	1120
R	Oily Drain Tank	5	12	8.5	510
2	Service Building, Electrical Equipment, and Parking	1	100.25	64.25	6441
3	Site Security Fence and Gates	230	3		723
4	Fuel Gas Compressor	2	17	11	374
5	Coalescing Filter Skid	2	11	5.5	121
6	Concrete Pad for Trailor	1	35	24	840
7	Demin. Water Pump Skid	3	9	9	243
8	Demin. Water Storage Tank	1	908		908
9	Demin. Water Firewater Storage Tank	1	2734		2734
10	Auxiliary Transformer & 480V Switchgear	4	24	15	1440
11a	15KV Switchgear	1	32	12.33	395
11b	480KV Switchgear	1	32	12.33	395
12	Blackstart Generator	1	33.67	14	471
13	SDG&E Gas Metering Station	1	63	12	756
14	Fuel Gas Compressor Inter-Stage-Fan Cooler	1	11	8	88
15	13.8KV-69KV Step-up Transformer	2	23.63	22.67	1071
16	69KV Disconnect Switch and Supports	3	4	4	48
17	69KV Circuit Breaker	1	7	7	49
18	69KV Circuit Switcher	2	4	4	32
19	69KV Pothead	1	13	6	78
20	Underground Sanitary System (Septic)	1	11	6	66
21	Fire Valve Enclosure	2	20	20	800
22	Wastewater Storage Tank	1	346		346
23	Not Used	1	0	0	0
24	Cooling Tower Makeup Tank and Pump Skid	1	855		855
25	480KV MCC	4	9	3	108

PROPOSED FOUNDATIONS 2007 - Continued

Foundation ID Number	Foundation Descriptions	Quantity	Length (feet)	Width (feet)	Total Surface Area (SF)
26	Diesel Fire Pump (Included in Service Building)	0	On same foundation as 2		0
27	Yard Fire Hydrant	6	6	6	216
28	Bridge	1	60	40	2400
29	Stormwater Detention Basin and Structures	11	7	7	539
30	RO Water Treatment Area	1	25	25	625
31	Diesel Tank	1	8	6	48
32	Piperack	3	7	4	84
33	Piperack	4	10	4	160
34	Fire Wall	1	1000	1	1000
				SUM =	**42220**
				Approx. =	**43,500**

Note: For Foundation Locations see Project No. 07-201 Plan Drawing C100 - Site Layout Plan.

Total Impervious Area for the Detention Basin Drainage Area = 43,500 square feet (1.0 Acres)

Cross Section for North Trapezoidal Channel

Project Description

Friction Method	Manning Formula
Solve For	Normal Depth

Input Data

Roughness Coefficient	0.035	
Channel Slope	0.01000	ft/ft
Normal Depth	0.7	ft
Left Side Slope	3.00	ft/ft (H:V)
Right Side Slope	3.00	ft/ft (H:V)
Bottom Width	5.00	ft
Discharge	12.75	ft^3/s

Cross Section Image

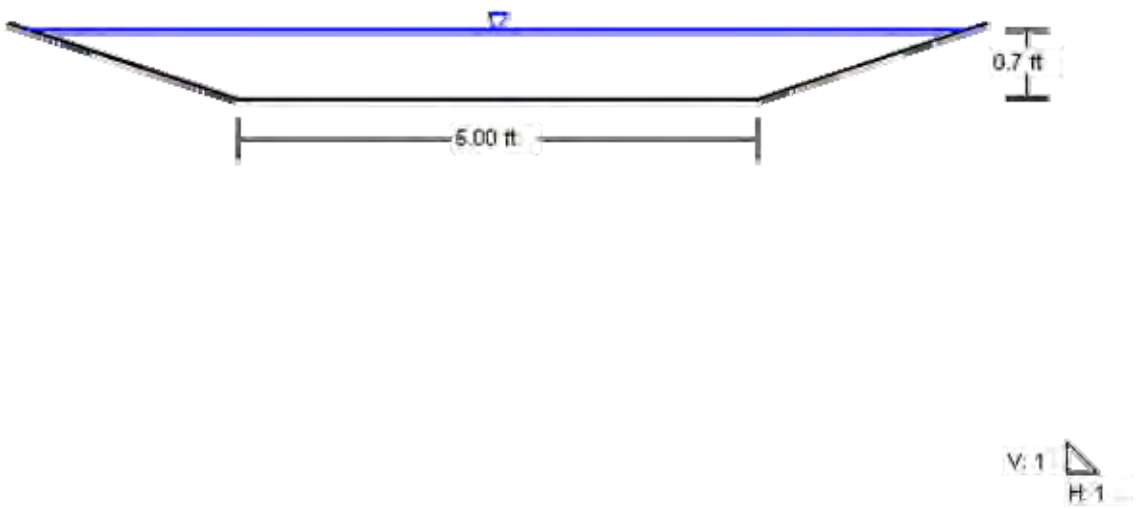

Worksheet for North Trapezoidal Channel

Project Description

Friction Method	Manning Formula
Solve For	Normal Depth

Input Data

Roughness Coefficient	0.035	
Channel Slope	0.01000	ft/ft
Left Side Slope	3.00	ft/ft (H:V)
Right Side Slope	3.00	ft/ft (H:V)
Bottom Width	5.00	ft
Discharge	12.75	ft^3/s

Results

Normal Depth	0.7	ft
Flow Area	4.71	ft^2
Wetted Perimeter	9.25	ft
Top Width	9.03	ft
Critical Depth	0.53	ft
Critical Slope	0.02443	ft/ft
Velocity	2.71	ft/s
Velocity Head	0.11	ft
Specific Energy	0.79	ft
Froude Number	0.66	
Flow Type	Subcritical	

GVF Input Data

Downstream Depth	0.0	ft
Length	0.00	ft
Number Of Steps	0	

GVF Output Data

Upstream Depth	0.0	ft
Profile Description		
Profile Headloss	0.00	ft
Downstream Velocity	Infinity	ft/s
Upstream Velocity	Infinity	ft/s
Normal Depth	0.7	ft
Critical Depth	0.53	ft
Channel Slope	0.01000	ft/ft
Critical Slope	0.02443	ft/ft

Cross Section for Secondary Access East Trapezoidal Channel

Project Description

Friction Method	Manning Formula
Solve For	Normal Depth

Input Data

Roughness Coefficient	0.035	
Channel Slope	0.10000	ft/ft
Normal Depth	0.31	ft
Left Side Slope	3.00	ft/ft (H:V)
Right Side Slope	3.00	ft/ft (H:V)
Bottom Width	3.00	ft
Discharge	6.36	ft^3/s

Cross Section Image

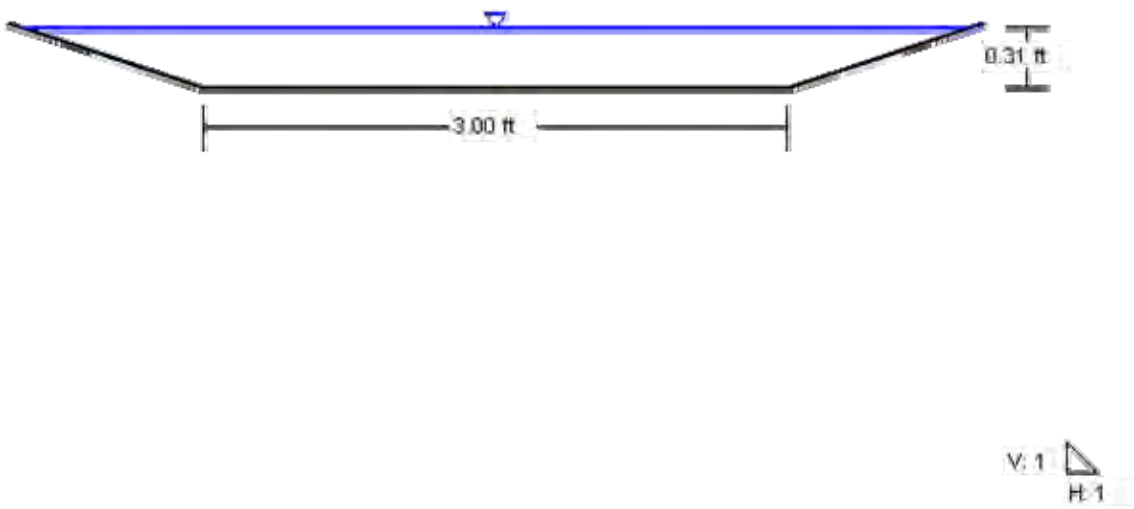

Worksheet for Secondary Access East Trapezoidal Channel

Project Description

Friction Method	Manning Formula
Solve For	Normal Depth

Input Data

Roughness Coefficient	0.035	
Channel Slope	0.10000	ft/ft
Left Side Slope	3.00	ft/ft (H:V)
Right Side Slope	3.00	ft/ft (H:V)
Bottom Width	3.00	ft
Discharge	6.36	ft^3/s

Results

Normal Depth	0.31	ft
Flow Area	1.21	ft^2
Wetted Perimeter	4.95	ft
Top Width	4.85	ft
Critical Depth	0.44	ft
Critical Slope	0.02646	ft/ft
Velocity	5.25	ft/s
Velocity Head	0.43	ft
Specific Energy	0.74	ft
Froude Number	1.85	
Flow Type	Supercritical	

GVF Input Data

Downstream Depth	0.00	ft
Length	0.00	ft
Number Of Steps	0	

GVF Output Data

Upstream Depth	0.00	ft
Profile Description		
Profile Headloss	0.00	ft
Downstream Velocity	Infinity	ft/s
Upstream Velocity	Infinity	ft/s
Normal Depth	0.31	ft
Critical Depth	0.44	ft
Channel Slope	0.10000	ft/ft
Critical Slope	0.02646	ft/ft

Cross Section for Secondary Access West Trapezoidal Channel

Project Description

Friction Method	Manning Formula
Solve For	Normal Depth

Input Data

Roughness Coefficient	0.035	
Channel Slope	0.10000	ft/ft
Normal Depth	0.45	ft
Left Side Slope	3.00	ft/ft (H:V)
Right Side Slope	3.00	ft/ft (H:V)
Bottom Width	3.00	ft
Discharge	12.56	ft^3/s

Cross Section Image

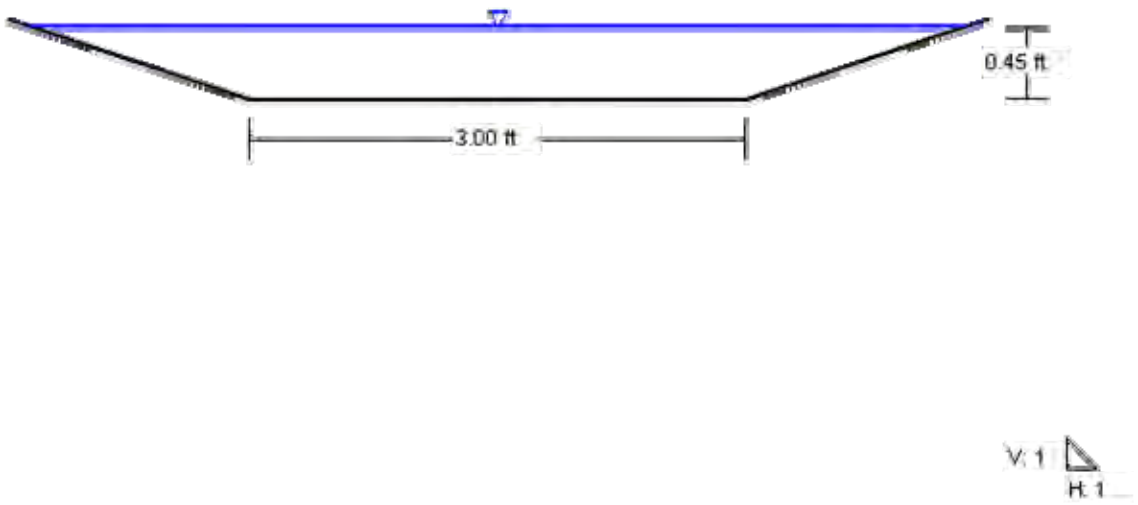

Worksheet for Secondary Access West Trapezoidal Channel

Project Description

Friction Method	Manning Formula
Solve For	Normal Depth

Input Data

Roughness Coefficient	0.035	
Channel Slope	0.10000	ft/ft
Left Side Slope	3.00	ft/ft (H:V)
Right Side Slope	3.00	ft/ft (H:V)
Bottom Width	3.00	ft
Discharge	12.56	ft^3/s

Results

Normal Depth	0.45	ft
Flow Area	1.94	ft^2
Wetted Perimeter	5.83	ft
Top Width	5.69	ft
Critical Depth	0.65	ft
Critical Slope	0.02394	ft/ft
Velocity	6.46	ft/s
Velocity Head	0.65	ft
Specific Energy	1.10	ft
Froude Number	1.95	
Flow Type	Supercritical	

GVF Input Data

Downstream Depth	0.00	ft
Length	0.00	ft
Number Of Steps	0	

GVF Output Data

Upstream Depth	0.00	ft
Profile Description		
Profile Headloss	0.00	ft
Downstream Velocity	Infinity	ft/s
Upstream Velocity	Infinity	ft/s
Normal Depth	0.45	ft
Critical Depth	0.65	ft
Channel Slope	0.10000	ft/ft
Critical Slope	0.02394	ft/ft

Worksheet for 24" CMP under Pala Del Norte then under Bridge

Project Description

Friction Method	Manning Formula
Solve For	Full Flow Capacity

Input Data

Roughness Coefficient	0.024	
Channel Slope	0.08217	ft/ft
Normal Depth	2.00	ft
Diameter	2.00	ft
Discharge	35.12	ft^3/s

Results

Discharge	35.12	ft^3/s
Normal Depth	2.00	ft
Flow Area	3.14	ft^2
Wetted Perimeter	6.28	ft
Top Width	0.00	ft
Critical Depth	1.92	ft
Percent Full	100.0	%
Critical Slope	0.07162	ft/ft
Velocity	11.18	ft/s
Velocity Head	1.94	ft
Specific Energy	3.94	ft
Froude Number	0.00	
Maximum Discharge	37.78	ft^3/s
Discharge Full	35.12	ft^3/s
Slope Full	0.08217	ft/ft
Flow Type	SubCritical	

GVF Input Data

Downstream Depth	0.00	ft
Length	0.00	ft
Number Of Steps	0	

GVF Output Data

Upstream Depth	0.00	ft
Profile Description		
Profile Headloss	0.00	ft
Average End Depth Over Rise	0.00	%
Normal Depth Over Rise	100.00	%

Worksheet for 24" CMP under Pala Del Norte then under Bridge

GVF Output Data

Downstream Velocity	Infinity	ft/s
Upstream Velocity	Infinity	ft/s
Normal Depth	2.00	ft
Critical Depth	1.92	ft
Channel Slope	0.08217	ft/ft
Critical Slope	0.07162	ft/ft

Worksheet for 14" (2) Steel under PDN Road then under Bridge

Project Description

Friction Method	Manning Formula
Solve For	Full Flow Capacity

Input Data

Roughness Coefficient	0.013	
Channel Slope	0.06033	ft/ft
Normal Depth	1.17	ft
Diameter	1.17	ft
Discharge	13.20	ft^3/s

Results

Discharge	13.20	ft^3/s
Normal Depth	1.17	ft
Flow Area	1.07	ft^2
Wetted Perimeter	3.67	ft
Top Width	0.00	ft
Critical Depth	1.16	ft
Percent Full	100.0	%
Critical Slope	0.05570	ft/ft
Velocity	12.35	ft/s
Velocity Head	2.37	ft
Specific Energy	3.54	ft
Froude Number	0.00	
Maximum Discharge	14.20	ft^3/s
Discharge Full	13.20	ft^3/s
Slope Full	0.06033	ft/ft
Flow Type	SubCritical	

GVF Input Data

Downstream Depth	0.00	ft
Length	0.00	ft
Number Of Steps	0	

GVF Output Data

Upstream Depth	0.00	ft
Profile Description		
Profile Headloss	0.00	ft
Average End Depth Over Rise	0.00	%
Normal Depth Over Rise	100.00	%

Worksheet for 14" (2) Steel under PDN Road then under Bridge

GVF Output Data

Downstream Velocity	Infinity	ft/s
Upstream Velocity	Infinity	ft/s
Normal Depth	1.17	ft
Critical Depth	1.16	ft
Channel Slope	0.06033	ft/ft
Critical Slope	0.05570	ft/ft

Cross Section for Proposed North side of Bridge Irregular Section

Project Description

Friction Method	Manning Formula
Solve For	Normal Depth

Input Data

Channel Slope	0.11000	ft/ft
Normal Depth	1.67	ft
Discharge	85.00	ft^3/s

Cross Section Image

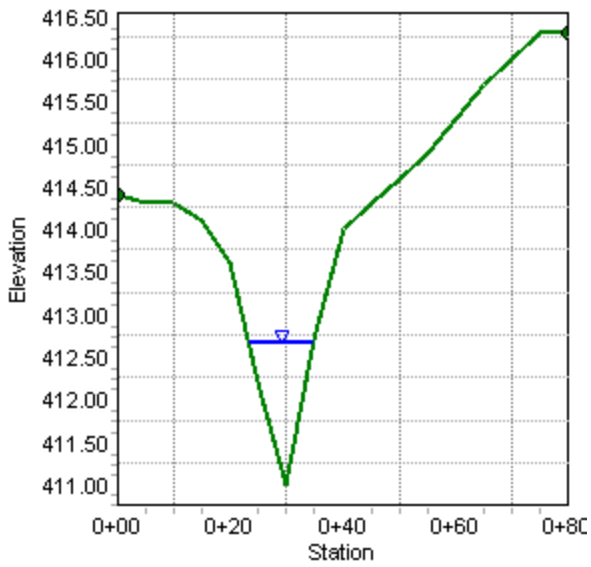

Worksheet for Proposed North side of Bridge Irregular Section

Project Description

Friction Method	Manning Formula
Solve For	Normal Depth

Input Data

Channel Slope	0.11000	ft/ft
Discharge	85.00	ft^3/s

Section Definitions

Station (ft)	Elevation (ft)
0+00	414.40
0+05	414.30
0+10	414.30
0+15	414.10
0+20	413.60
0+25	412.20
0+30	411.00
0+35	412.70
0+40	414.00
0+45	414.30
0+50	414.60
0+55	414.90
0+60	415.30
0+65	415.70
0+70	416.00
0+75	416.30
0+80	416.30

Roughness Segment Definitions

Start Station	Ending Station	Roughness Coefficient
(0+00, 414.40)	(0+80, 416.30)	0.050

Results

Normal Depth	1.67	ft

Worksheet for Proposed North side of Bridge Irregular Section

Results

Elevation Range	411.00 to 416.30 ft		
Flow Area		9.87	ft²
Wetted Perimeter		12.09	ft
Top Width		11.60	ft
Normal Depth		1.67	ft
Critical Depth		2.05	ft
Critical Slope		0.03807	ft/ft
Velocity		8.61	ft/s
Velocity Head		1.15	ft
Specific Energy		2.82	ft
Froude Number		1.65	
Flow Type	Supercritical		

GVF Input Data

Downstream Depth	0.00	ft
Length	0.00	ft
Number Of Steps	0	

GVF Output Data

Upstream Depth	0.00	ft
Profile Description		
Profile Headloss	0.00	ft
Downstream Velocity	Infinity	ft/s
Upstream Velocity	Infinity	ft/s
Normal Depth	1.67	ft
Critical Depth	2.05	ft
Channel Slope	0.11000	ft/ft
Critical Slope	0.03807	ft/ft

Messages

Notes

The discharge of 85 cfs is the post-development discharge. Assumptions: Top Bridge El. = 420.00', Bottom Bridge El. = 416.5, 1 foot of freeboard is required. Thus, the max water elevation of 415.5'. If the bridge top elevation is 420 than there is 6.44' available for the bridge deck and beams. The channel roughness coefficient of 0.5 was for a Natural stream, stony notes or Very rough channel, with grass.

Cross Section for Proposed Centerline of Bridge Irregular Section

Project Description

Friction Method	Manning Formula
Solve For	Normal Depth

Input Data

Channel Slope	0.11000	ft/ft
Normal Depth	1.32	ft
Discharge	85.00	ft^3/s

Cross Section Image

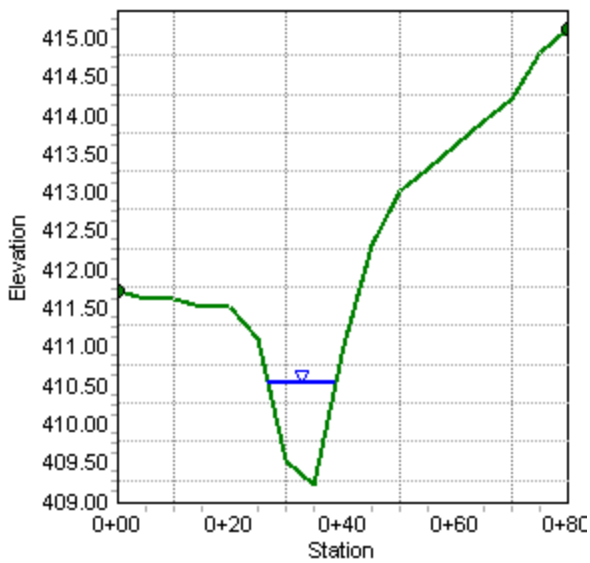

Worksheet for Proposed Centerline of Bridge Irregular Section

Project Description

Friction Method	Manning Formula
Solve For	Normal Depth

Input Data

Channel Slope	0.11000	ft/ft
Discharge	85.00	ft^3/s

Section Definitions

Station (ft)	Elevation (ft)
0+00	411.70
0+05	411.60
0+10	411.60
0+15	411.50
0+20	411.50
0+25	411.10
0+30	409.50
0+35	409.20
0+40	411.00
0+45	412.30
0+50	413.00
0+55	413.30
0+60	413.60
0+65	413.90
0+70	414.20
0+75	414.80
0+80	415.10

Roughness Segment Definitions

Start Station	Ending Station	Roughness Coefficient
(0+00, 411.70)	(0+80, 415.10)	0.050

Results

Normal Depth	1.32	ft

Worksheet for Proposed Centerline of Bridge Irregular Section

Results

Elevation Range	409.20 to 415.10 ft		
Flow Area		9.93	ft²
Wetted Perimeter		12.27	ft
Top Width		11.87	ft
Normal Depth		1.32	ft
Critical Depth		1.69	ft
Critical Slope		0.03768	ft/ft
Velocity		8.56	ft/s
Velocity Head		1.14	ft
Specific Energy		2.46	ft
Froude Number		1.65	
Flow Type	Supercritical		

GVF Input Data

Downstream Depth	0.00	ft
Length	0.00	ft
Number Of Steps	0	

GVF Output Data

Upstream Depth	0.00	ft
Profile Description		
Profile Headloss	0.00	ft
Downstream Velocity	Infinity	ft/s
Upstream Velocity	Infinity	ft/s
Normal Depth	1.32	ft
Critical Depth	1.69	ft
Channel Slope	0.11000	ft/ft
Critical Slope	0.03768	ft/ft

Cross Section for Proposed Southside of Bridge Irregular Section

Project Description

Friction Method	Manning Formula
Solve For	Normal Depth

Input Data

Channel Slope	0.11000	ft/ft
Normal Depth	1.22	ft
Discharge	85.00	ft^3/s

Cross Section Image

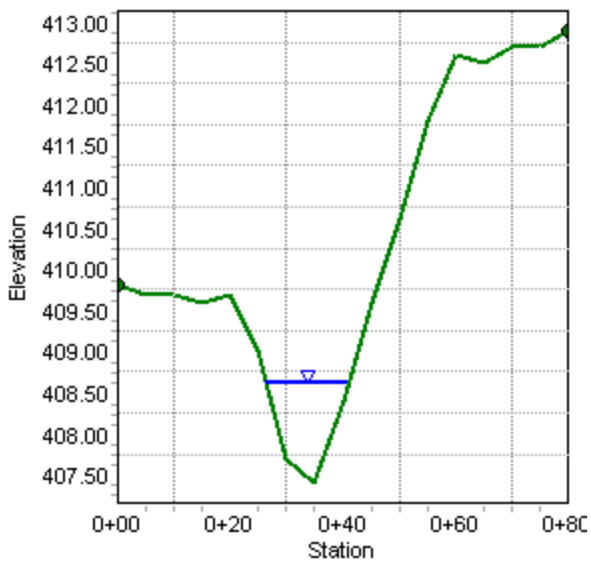

Worksheet for Proposed Southside of Bridge Irregular Section

Project Description

Friction Method	Manning Formula
Solve For	Normal Depth

Input Data

Channel Slope	0.11000	ft/ft
Discharge	85.00	ft^3/s

Section Definitions

Station (ft)	Elevation (ft)
0+00	409.80
0+05	409.70
0+10	409.70
0+15	409.60
0+20	409.70
0+25	409.00
0+30	407.70
0+35	407.40
0+40	408.40
0+45	409.60
0+50	410.60
0+55	411.80
0+60	412.60
0+65	412.50
0+70	412.70
0+75	412.70
0+80	412.90

Roughness Segment Definitions

Start Station	Ending Station	Roughness Coefficient
(0+00, 409.80)	(0+80, 412.90)	0.050

Results

Normal Depth	1.22	ft

Worksheet for Proposed Southside of Bridge Irregular Section

Results

Elevation Range	407.40 to 412.90 ft		
Flow Area		10.68	ft²
Wetted Perimeter		14.71	ft
Top Width		14.45	ft
Normal Depth		1.22	ft
Critical Depth		1.53	ft
Critical Slope		0.03842	ft/ft
Velocity		7.96	ft/s
Velocity Head		0.99	ft
Specific Energy		2.20	ft
Froude Number		1.63	
Flow Type	Supercritical		

GVF Input Data

Downstream Depth	0.00	ft
Length	0.00	ft
Number Of Steps	0	

GVF Output Data

Upstream Depth	0.00	ft
Profile Description		
Profile Headloss	0.00	ft
Downstream Velocity	Infinity	ft/s
Upstream Velocity	Infinity	ft/s
Normal Depth	1.22	ft
Critical Depth	1.53	ft
Channel Slope	0.11000	ft/ft
Critical Slope	0.03842	ft/ft

Worksheet for Circular 15" Pipe - 1

Project Description

Friction Method	Manning Formula
Solve For	Normal Depth

Input Data

Roughness Coefficient	0.013	
Channel Slope	0.00500	ft/ft
Diameter	15.00	in
Discharge	3.86	ft^3/s

Results

Normal Depth	10.577	in
Flow Area	0.92	ft^2
Wetted Perimeter	2.49	ft
Top Width	1.14	ft
Critical Depth	0.79	ft
Percent Full	70.5	%
Critical Slope	0.00666	ft/ft
Velocity	4.17	ft/s
Velocity Head	0.27	ft
Specific Energy	1.15	ft
Froude Number	0.82	
Maximum Discharge	4.91	ft^3/s
Discharge Full	4.57	ft^3/s
Slope Full	0.00357	ft/ft
Flow Type	SubCritical	

GVF Input Data

Downstream Depth	0.000	in
Length	0.00	ft
Number Of Steps	0	

GVF Output Data

Upstream Depth	0.000	in
Profile Description		
Profile Headloss	0.00	ft
Average End Depth Over Rise	0.00	%
Normal Depth Over Rise	70.51	%
Downstream Velocity	Infinity	ft/s
Upstream Velocity	Infinity	ft/s

Worksheet for Circular 15" Pipe - 1

GVF Output Data

Normal Depth	10.577	in
Critical Depth	0.79	ft
Channel Slope	0.00500	ft/ft
Critical Slope	0.00666	ft/ft

Cross Section for Circular 15" Pipe - 1

Project Description

Friction Method	Manning Formula
Solve For	Normal Depth

Input Data

Roughness Coefficient	0.013	
Channel Slope	0.00500	ft/ft
Normal Depth	10.577	in
Diameter	15.00	in
Discharge	3.86	ft^3/s

Cross Section Image

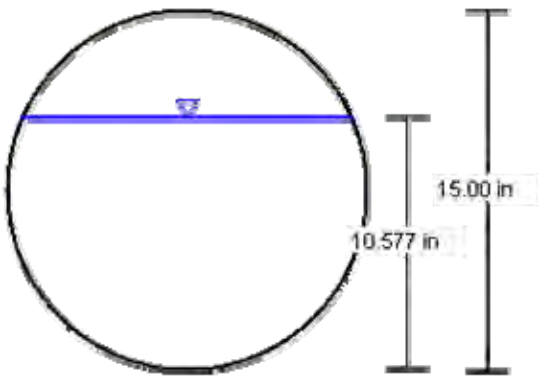

Worksheet for Circular 18" Pipe - 2

Project Description

Friction Method	Manning Formula
Solve For	Normal Depth

Input Data

Roughness Coefficient	0.013	
Channel Slope	0.00500	ft/ft
Diameter	18.00	in
Discharge	6.34	ft^3/s

Results

Normal Depth	12.789	in
Flow Area	1.34	ft^2
Wetted Perimeter	3.01	ft
Top Width	1.36	ft
Critical Depth	0.97	ft
Percent Full	71.1	%
Critical Slope	0.00639	ft/ft
Velocity	4.72	ft/s
Velocity Head	0.35	ft
Specific Energy	1.41	ft
Froude Number	0.84	
Maximum Discharge	7.99	ft^3/s
Discharge Full	7.43	ft^3/s
Slope Full	0.00364	ft/ft
Flow Type	SubCritical	

GVF Input Data

Downstream Depth	0.000	in
Length	0.00	ft
Number Of Steps	0	

GVF Output Data

Upstream Depth	0.000	in
Profile Description		
Profile Headloss	0.00	ft
Average End Depth Over Rise	0.00	%
Normal Depth Over Rise	71.05	%
Downstream Velocity	Infinity	ft/s
Upstream Velocity	Infinity	ft/s

Worksheet for Circular 18" Pipe - 2

GVF Output Data

Normal Depth	12.789	in
Critical Depth	0.97	ft
Channel Slope	0.00500	ft/ft
Critical Slope	0.00639	ft/ft

Cross Section for Circular 18" Pipe - 2

Project Description

Friction Method	Manning Formula
Solve For	Normal Depth

Input Data

Roughness Coefficient	0.013	
Channel Slope	0.00500	ft/ft
Normal Depth	12.789	in
Diameter	18.00	in
Discharge	6.34	ft^3/s

Cross Section Image

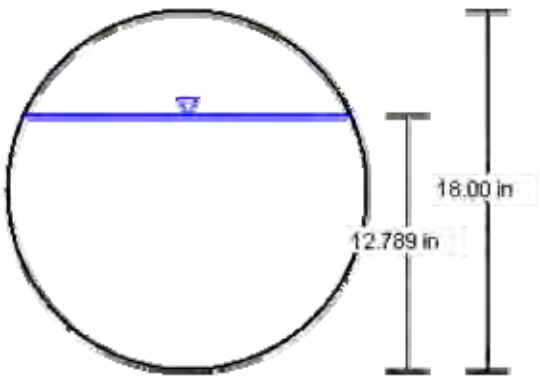

Worksheet for Circular 18" Pipe - 3

Project Description

Friction Method	Manning Formula
Solve For	Normal Depth

Input Data

Roughness Coefficient	0.013	
Channel Slope	0.01500	ft/ft
Diameter	18.00	in
Discharge	8.58	ft^3/s

Results

Normal Depth	10.750	in
Flow Area	1.10	ft^2
Wetted Perimeter	2.65	ft
Top Width	1.47	ft
Critical Depth	1.13	ft
Percent Full	59.7	%
Critical Slope	0.00787	ft/ft
Velocity	7.79	ft/s
Velocity Head	0.94	ft
Specific Energy	1.84	ft
Froude Number	1.59	
Maximum Discharge	13.84	ft^3/s
Discharge Full	12.86	ft^3/s
Slope Full	0.00667	ft/ft
Flow Type	SuperCritical	

GVF Input Data

Downstream Depth	0.000	in
Length	0.00	ft
Number Of Steps	0	

GVF Output Data

Upstream Depth	0.000	in
Profile Description		
Profile Headloss	0.00	ft
Average End Depth Over Rise	0.00	%
Normal Depth Over Rise	59.72	%
Downstream Velocity	Infinity	ft/s
Upstream Velocity	Infinity	ft/s

Worksheet for Circular 18" Pipe - 3

GVF Output Data

Normal Depth	10.750	in
Critical Depth	1.13	ft
Channel Slope	0.01500	ft/ft
Critical Slope	0.00787	ft/ft

Cross Section for Circular 18" Pipe - 3

Project Description

Friction Method	Manning Formula
Solve For	Normal Depth

Input Data

Roughness Coefficient	0.013	
Channel Slope	0.01500	ft/ft
Normal Depth	10.750	in
Diameter	18.00	in
Discharge	8.58	ft^3/s

Cross Section Image

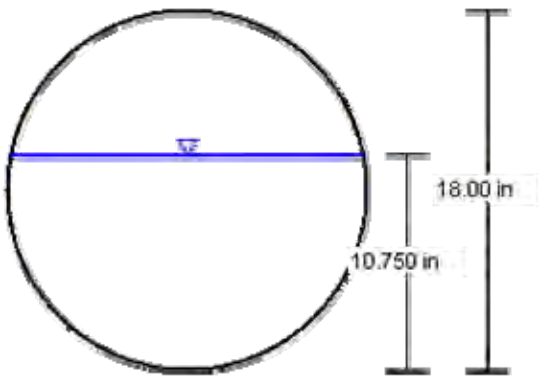

Worksheet for Circular 15" Pipe - 4

Project Description

Friction Method	Manning Formula
Solve For	Normal Depth

Input Data

Roughness Coefficient	0.013	
Channel Slope	0.00500	ft/ft
Diameter	15.00	in
Discharge	3.96	ft^3/s

Results

Normal Depth	10.790	in
Flow Area	0.94	ft^2
Wetted Perimeter	2.53	ft
Top Width	1.12	ft
Critical Depth	0.81	ft
Percent Full	71.9	%
Critical Slope	0.00674	ft/ft
Velocity	4.19	ft/s
Velocity Head	0.27	ft
Specific Energy	1.17	ft
Froude Number	0.81	
Maximum Discharge	4.91	ft^3/s
Discharge Full	4.57	ft^3/s
Slope Full	0.00376	ft/ft
Flow Type	SubCritical	

GVF Input Data

Downstream Depth	0.000	in
Length	0.00	ft
Number Of Steps	0	

GVF Output Data

Upstream Depth	0.000	in
Profile Description		
Profile Headloss	0.00	ft
Average End Depth Over Rise	0.00	%
Normal Depth Over Rise	71.93	%
Downstream Velocity	Infinity	ft/s
Upstream Velocity	Infinity	ft/s

Worksheet for Circular 15" Pipe - 4

GVF Output Data

Normal Depth	10.790	in
Critical Depth	0.81	ft
Channel Slope	0.00500	ft/ft
Critical Slope	0.00674	ft/ft

Cross Section for Circular 15" Pipe - 4

Project Description

Friction Method	Manning Formula
Solve For	Normal Depth

Input Data

Roughness Coefficient	0.013	
Channel Slope	0.00500	ft/ft
Normal Depth	10.790	in
Diameter	15.00	in
Discharge	3.96	ft^3/s

Cross Section Image

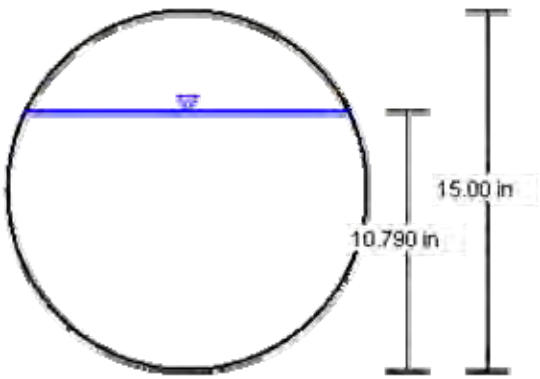

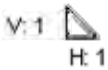

Worksheet for Circular 15" Pipe - 5

Project Description

Friction Method	Manning Formula
Solve For	Normal Depth

Input Data

Roughness Coefficient	0.013	
Channel Slope	0.00500	ft/ft
Diameter	15.00	in
Discharge	2.62	ft^3/s

Results

Normal Depth	8.144	in
Flow Area	0.68	ft^2
Wetted Perimeter	2.07	ft
Top Width	1.25	ft
Critical Depth	0.65	ft
Percent Full	54.3	%
Critical Slope	0.00580	ft/ft
Velocity	3.85	ft/s
Velocity Head	0.23	ft
Specific Energy	0.91	ft
Froude Number	0.92	
Maximum Discharge	4.91	ft^3/s
Discharge Full	4.57	ft^3/s
Slope Full	0.00165	ft/ft
Flow Type	SubCritical	

GVF Input Data

Downstream Depth	0.000	in
Length	0.00	ft
Number Of Steps	0	

GVF Output Data

Upstream Depth	0.000	in
Profile Description		
Profile Headloss	0.00	ft
Average End Depth Over Rise	0.00	%
Normal Depth Over Rise	54.29	%
Downstream Velocity	Infinity	ft/s
Upstream Velocity	Infinity	ft/s

Worksheet for Circular 15" Pipe - 5

GVF Output Data

Normal Depth	8.144	in
Critical Depth	0.65	ft
Channel Slope	0.00500	ft/ft
Critical Slope	0.00580	ft/ft

Cross Section for Circular 15" Pipe - 5

Project Description

Friction Method	Manning Formula
Solve For	Normal Depth

Input Data

Roughness Coefficient	0.013	
Channel Slope	0.00500	ft/ft
Normal Depth	8.144	in
Diameter	15.00	in
Discharge	2.62	ft^3/s

Cross Section Image

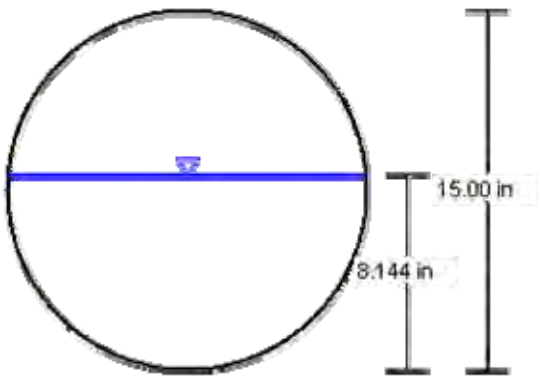

Worksheet for Circular 24" Pipe - 6

Project Description

Friction Method	Manning Formula
Solve For	Normal Depth

Input Data

Roughness Coefficient	0.013	
Channel Slope	0.02000	ft/ft
Diameter	24.00	in
Discharge	19.24	ft^3/s

Results

Normal Depth	13.418	in
Flow Area	1.81	ft^2
Wetted Perimeter	3.38	ft
Top Width	1.99	ft
Critical Depth	1.58	ft
Percent Full	55.9	%
Critical Slope	0.00779	ft/ft
Velocity	10.65	ft/s
Velocity Head	1.76	ft
Specific Energy	2.88	ft
Froude Number	1.97	
Maximum Discharge	34.41	ft^3/s
Discharge Full	31.99	ft^3/s
Slope Full	0.00723	ft/ft
Flow Type	SuperCritical	

GVF Input Data

Downstream Depth	0.000	in
Length	0.00	ft
Number Of Steps	0	

GVF Output Data

Upstream Depth	0.000	in
Profile Description		
Profile Headloss	0.00	ft
Average End Depth Over Rise	0.00	%
Normal Depth Over Rise	55.91	%
Downstream Velocity	Infinity	ft/s
Upstream Velocity	Infinity	ft/s

Worksheet for Circular 24" Pipe - 6

GVF Output Data

Normal Depth	13.418	in
Critical Depth	1.58	ft
Channel Slope	0.02000	ft/ft
Critical Slope	0.00779	ft/ft

Cross Section for Circular 24" Pipe - 6

Project Description

Friction Method	Manning Formula
Solve For	Normal Depth

Input Data

Roughness Coefficient	0.013	
Channel Slope	0.02000	ft/ft
Normal Depth	13.418	in
Diameter	24.00	in
Discharge	19.24	ft^3/s

Cross Section Image

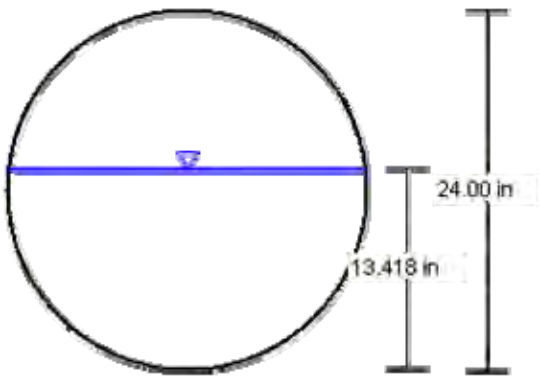

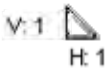

Worksheet for Circular 30" Pipe - 7

Project Description

Friction Method	Manning Formula
Solve For	Normal Depth

Input Data

Roughness Coefficient	0.013	
Channel Slope	0.02500	ft/ft
Diameter	30.00	in
Discharge	19.24	ft^3/s

Results

Normal Depth	11.197	in
Flow Area	1.67	ft^2
Wetted Perimeter	3.29	ft
Top Width	2.42	ft
Critical Depth	1.49	ft
Percent Full	37.3	%
Critical Slope	0.00500	ft/ft
Velocity	11.52	ft/s
Velocity Head	2.06	ft
Specific Energy	2.99	ft
Froude Number	2.44	
Maximum Discharge	69.76	ft^3/s
Discharge Full	64.85	ft^3/s
Slope Full	0.00220	ft/ft
Flow Type	SuperCritical	

GVF Input Data

Downstream Depth	0.000	in
Length	0.00	ft
Number Of Steps	0	

GVF Output Data

Upstream Depth	0.000	in
Profile Description		
Profile Headloss	0.00	ft
Average End Depth Over Rise	0.00	%
Normal Depth Over Rise	37.32	%
Downstream Velocity	Infinity	ft/s
Upstream Velocity	Infinity	ft/s

Worksheet for Circular 30" Pipe - 7

GVF Output Data

Normal Depth	11.197	in
Critical Depth	1.49	ft
Channel Slope	0.02500	ft/ft
Critical Slope	0.00500	ft/ft

Cross Section for Circular 30" Pipe - 7

Project Description

Friction Method	Manning Formula
Solve For	Normal Depth

Input Data

Roughness Coefficient	0.013	
Channel Slope	0.02500	ft/ft
Normal Depth	11.197	in
Diameter	30.00	in
Discharge	19.24	ft^3/s

Cross Section Image

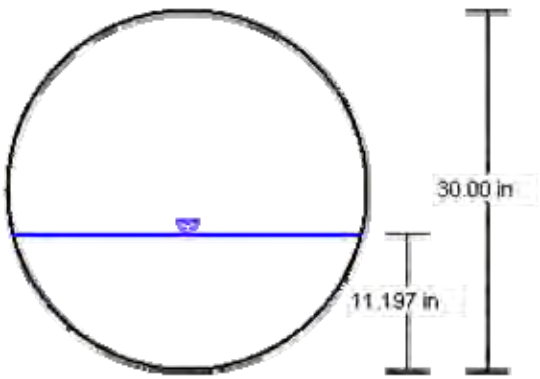

Worksheet for 12" Outlet Circular Orifice

Project Description

Solve For	Discharge

Input Data

Headwater Elevation	412.40	ft
Centroid Elevation	403.50	ft
Tailwater Elevation	398.35	ft
Discharge Coefficient	0.60	
Diameter	12.00	in

Results

Discharge	11.28	ft^3/s
Headwater Height Above Centroid	8.90	ft
Tailwater Height Above Centroid	-5.15	ft
Flow Area	0.79	ft^2
Velocity	14.36	ft/s

Worksheet for Outlet Control Struc. Rectangular Weir

Project Description

Solve For	Headwater Elevation

Input Data

Discharge	27.86	ft^3/s
Crest Elevation	412.40	ft
Tailwater Elevation	398.35	ft
Weir Coefficient	3.33	US
Crest Length	18.00	ft
Number Of Contractions	2	

Results

Headwater Elevation	413.00	ft
Headwater Height Above Crest	0.60	ft
Tailwater Height Above Crest	-14.05	ft
Flow Area	10.85	ft^2
Velocity	2.57	ft/s
Wetted Perimeter	19.21	ft
Top Width	18.00	ft

Messages

Notes	The discharge 27.86 is the 100 year storm for the 5.2 acre site entering the Detention Basin

Worksheet for 100-year 36" Pipe - 10

Project Description

Friction Method	Manning Formula
Solve For	Normal Depth

Input Data

Roughness Coefficient	0.013	
Channel Slope	0.01000	ft/ft
Diameter	36.00	in
Discharge	39.51	ft^3/s

Results

Normal Depth	19.939	in
Flow Area	4.02	ft^2
Wetted Perimeter	5.04	ft
Top Width	2.98	ft
Critical Depth	2.05	ft
Percent Full	55.4	%
Critical Slope	0.00536	ft/ft
Velocity	9.83	ft/s
Velocity Head	1.50	ft
Specific Energy	3.16	ft
Froude Number	1.49	
Maximum Discharge	71.74	ft^3/s
Discharge Full	66.69	ft^3/s
Slope Full	0.00351	ft/ft
Flow Type	SuperCritical	

GVF Input Data

Downstream Depth	0.000	in
Length	0.00	ft
Number Of Steps	0	

GVF Output Data

Upstream Depth	0.000	in
Profile Description		
Profile Headloss	0.00	ft
Average End Depth Over Rise	0.00	%
Normal Depth Over Rise	55.39	%
Downstream Velocity	Infinity	ft/s
Upstream Velocity	Infinity	ft/s

Worksheet for 100-year 36" Pipe - 10

GVF Output Data

Normal Depth	19.939	in
Critical Depth	2.05	ft
Channel Slope	0.01000	ft/ft
Critical Slope	0.00536	ft/ft

Cross Section for 100-year 36" Pipe - 10

Project Description

Friction Method	Manning Formula
Solve For	Normal Depth

Input Data

Roughness Coefficient	0.013	
Channel Slope	0.01000	ft/ft
Normal Depth	19.939	in
Diameter	36.00	in
Discharge	39.51	ft^3/s

Cross Section Image

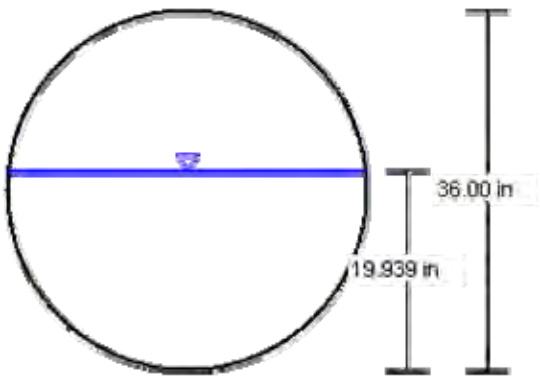

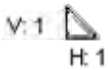

WinTR-55 Current Data Description

--- Identification Data ---

User: Langel
Project: 07-0201
SubTitle: Orange Grove Power Plant - Detention Basin
State: California
County: San Diego
Filename: N:\2007\07201\engr\ce\Stormwater Design\OG - Pre-Dev. Detention Basin Design.w55

Date: 12/21/2007
Units: English
Areal Units: Acres

--- Sub-Area Data ---

Name	Description	Reach	Area(ac)	RCN	Tc
Pre-Dev	Pre-Development	Outlet	5.2	76	0.140

Total area: 5.20 (ac)

--- Storm Data --

Rainfall Depth by Rainfall Return Period

2-Yr (in)	5-Yr (in)	10-Yr (in)	25-Yr (in)	50-Yr (in)	100-Yr (in)	1-Yr (in)
2.5	3.5	4.0	5.0	5.5	6.0	.0

Storm Data Source: User-provided custom storm data
Rainfall Distribution Type: Type I
Dimensionless Unit Hydrograph: <standard>

Storm Data

Rainfall Depth by Rainfall Return Period

2-Yr (in)	5-Yr (in)	10-Yr (in)	25-Yr (in)	50-Yr (in)	100-Yr (in)	1-Yr (in)
2.5	3.5	4.0	5.0	5.5	6.0	.0

Storm Data Source: User-provided custom storm data
Rainfall Distribution Type: Type I
Dimensionless Unit Hydrograph: <standard>

Langel 07-0201

Orange Grove Power Plant - Detention Basin

San Diego County, California

Watershed Peak Table

Sub-Area or Reach Identifier	Peak Flow by Rainfall Return Period 50-Yr (cfs)	100-Yr (cfs)
SUBAREAS		
Pre-Dev	10.97	12.68
REACHES		
OUTLET	10.97	12.68

Langel 07-0201

Orange Grove Power Plant - Detention Basin

San Diego County, California

Hydrograph Peak/Peak Time Table

Sub-Area or Reach Identifier	Peak Flow and Peak Time (hr) by Rainfall Return Period 50-Yr (cfs)	(hr)	100-Yr (cfs)	(hr)
SUBAREAS				
Pre-Dev	10.97	9.96	12.68	9.96
REACHES				
OUTLET	10.97		12.68	

Langel 07-0201

Orange Grove Power Plant - Detention Basin

San Diego County, California

Sub-Area Summary Table

Sub-Area Identifier	Drainage Area (ac)	Time of Concentration (hr)	Curve Number	Receiving Reach	Sub-Area Description
Pre-Dev	5.20	0.140	76	Outlet	Pre-Development

Total Area: 5.20 (ac)

Langel 07-0201

Orange Grove Power Plant - Detention Basin
San Diego County, California

Sub-Area Time of Concentration Details

Sub-Area Identifier/	Flow Length (ft)	Slope (ft/ft)	Mannings's n	End Area (sq ft)	Wetted Perimeter (ft)	Velocity (ft/sec)	Travel Time (hr)
Pre-Dev							
SHEET	100	0.1000	0.170				0.107
SHALLOW	600	0.1000	0.050				0.033
						Time of Concentration	0.140

Orange Grove Power Plant - Detention Basin
San Diego County, California

Sub-Area Land Use and Curve Number Details

Sub-Area Identifier	Land Use		Hydrologic Soil Group	Sub-Area Area (ac)	Curve Number
Pre-Dev	Woods - grass combination	(poor)	C	3.5	82
	Sagebrush (w/ grass understory)	(fair)	C	1.7	63
	Total Area / Weighted Curve Number			5.2	76
				===	==

WinTR-55 Current Data Description

--- Identification Data ---

User: Langel
Project: 07-0201
SubTitle: Orange Grove Power Plant - Detention Basin
State: California
County: San Diego
Filename: N:\2007\07201\engr\ce\Stormwater Design\OG - Post-Dev. Detention Basin Design.w55

Date: 12/21/2007
Units: English
Areal Units: Acres

--- Sub-Area Data ---

Name	Description	Reach	Area(ac)	RCN	Tc
Post-Dev	Post-Development	Outlet	5.2	83	0.189

Total area: 5.20 (ac)

--- Storm Data --

Rainfall Depth by Rainfall Return Period

2-Yr (in)	5-Yr (in)	10-Yr (in)	25-Yr (in)	50-Yr (in)	100-Yr (in)	1-Yr (in)
2.5	3.5	4.0	5.0	5.5	6.0	.0

Storm Data Source: User-provided custom storm data
Rainfall Distribution Type: Type I
Dimensionless Unit Hydrograph: <standard>

Langel 07-0201

Orange Grove Power Plant - Detention Basin
San Diego County, California

Storm Data

Rainfall Depth by Rainfall Return Period

2-Yr (in)	5-Yr (in)	10-Yr (in)	25-Yr (in)	50-Yr (in)	100-Yr (in)	1-Yr (in)
2.5	3.5	4.0	5.0	5.5	6.0	.0

Storm Data Source: User-provided custom storm data
Rainfall Distribution Type: Type I
Dimensionless Unit Hydrograph: <standard>

Langel 07-0201

Orange Grove Power Plant - Detention Basin

San Diego County, California

Watershed Peak Table

Sub-Area or Reach Identifier	Peak Flow by Rainfall Return Period 50-Yr (cfs)	100-Yr (cfs)
SUBAREAS		
Post-Dev	12.98	14.66
REACHES		
OUTLET	12.98	14.66

Langel 07-0201

Orange Grove Power Plant - Detention Basin

San Diego County, California

Hydrograph Peak/Peak Time Table

Sub-Area or Reach Identifier	Peak Flow and Peak Time (hr) by Rainfall Return Period 50-Yr (cfs)	(hr)	100-Yr (cfs)	(hr)
SUBAREAS				
Post-Dev	12.98	10.00	14.66	9.99
REACHES				
OUTLET	12.98		14.66	

Langel 07-0201

Orange Grove Power Plant - Detention Basin

San Diego County, California

Sub-Area Summary Table

Sub-Area Identifier	Drainage Area (ac)	Time of Concentration (hr)	Curve Number	Receiving Reach	Sub-Area Description
Post-Dev	5.20	0.189	83	Outlet	Post-Development

Total Area: 5.20 (ac)

Langel 07-0201

Orange Grove Power Plant - Detention Basin
San Diego County, California

Sub-Area Time of Concentration Details

Sub-Area Identifier/	Flow Length (ft)	Slope (ft/ft)	Mannings's n	End Area (sq ft)	Wetted Perimeter (ft)	Velocity (ft/sec)	Travel Time (hr)
Post-Dev							
SHEET	100	0.0050	0.050				0.134
SHALLOW	100	0.0050	0.050				0.024
CHANNEL	500	0.0100	0.013	1.77	4.71	6.039	0.023
CHANNEL	200	0.0100	0.013	3.14	6.28	6.944	0.008
						Time of Concentration	0.189

Langel 07-0201

Orange Grove Power Plant - Detention Basin
San Diego County, California

Sub-Area Land Use and Curve Number Details

Sub-Area Identifier	Land Use	Hydrologic Soil Group	Sub-Area Area (ac)	Curve Number
Post-Dev	Paved parking lots, roofs, driveways	C	.8	98
	Gravel (w/ right-of-way)	C	2.7	89
	Brush - brush, weed, grass mix (good)	C	1.7	65
	Total Area / Weighted Curve Number		5.2	83
			===	==

Orange Grove Power Plant
Sega Project No. 07-0098
MUP 07-009
Orange Grove Energy, L.P.
Pre- and Post-Development Drainage Calculations

Name of printed page file:
TR20.out

STORM 50-Year

Area or Reach Identifier	Drainage Area (sq mi)	Rain Gage ID or Location	Runoff Amount (in)	Elevation (ft)	Peak Flow Time (hr)	Peak Flow Rate (cfs)	Peak Flow Rate (csm)
Pre-Dev	0.008		2.949		9.96	10.97	1349.93

Area or Reach Identifier	Drainage Area (sq mi)	Rain Gage ID or Location	Runoff Amount (in)	Elevation (ft)	Peak Flow Time (hr)	Peak Flow Rate (cfs)	Peak Flow Rate (csm)
Post-Dev	0.008		3.626		10.00	12.98	1596.74

STORM 100-Year

Area or Reach Identifier	Drainage Area (sq mi)	Rain Gage ID or Location	Runoff Amount (in)	Elevation (ft)	Peak Flow Time (hr)	Peak Flow Rate (cfs)	Peak Flow Rate (csm)
Pre-Dev	0.008		3.376		9.96	12.68	1559.32

Area or Reach Identifier	Drainage Area (sq mi)	Rain Gage ID or Location	Runoff Amount (in)	Elevation (ft)	Peak Flow Time (hr)	Peak Flow Rate (cfs)	Peak Flow Rate (csm)
Post-Dev	0.008		4.088		9.99	14.66	1803.03

Quantity Volume Calculations for the Dry-Detention Basin utilizing TR-20

Drainage Area 5.2 **acres**

Output	24-Hour, 50-Year Storm		Pre vs. Post Differential
	Pre-Development	Post-Development	
Discharge (cfs)	10.97	12.98	2.01
Runoff Volume (inches)	2.95	3.63	0.677
Runoff Volume (acre - feet)	1.28	1.57	0.29
Runoff Volume (ft^3)	55665	68444	12779
Estimated TOTALS (ft^3)	55,700	68,500	12,800

Output	24-Hour, 100-Year Storm		Pre vs. Post Differential
	Pre-Development	Post-Development	
Discharge (cfs)	12.68	14.66	1.98
Runoff Volume (inches)	3.38	4.09	0.712
Runoff Volume (acre - feet)	1.46	1.77	0.31
Runoff Volume (ft^3)	63725	77165	13440
Estimated TOTALS (ft^3)	63,700	77,200	13,500

Max Discharge	77,200
Change Pre vs. Post	13,500

Energy Dissipator Calculations - 100-year Storm Event

Table from the San Diego County Drainage Design Manual - July 2005
Page 7-1 and 7-2

Table 7-1 Rock Size for Riprap Aprons at Storm Drain Outlets

Outlet Velocity (ft/s)	Rock Classification	Size of Stone, d_{50} (ft) [a]
6-10	No. 2 Backing	0.7
10-12	¼ Ton	1.8
12-14	½ Ton	2.3
14-16	1 Ton	2.9
16-18	2 Ton	3.6

7.3.1.1 San Diego Regional Standard Drawing

Apron Length and Width. **Riprap apron length and width are a function of the diameter or vertical dimension of the outlet pipe or culvert. The apron length shall be determined using the following equation, with a minimum length of 10 feet:**

$$L_a = 4D_O \qquad (7\text{-}1)$$

where …
L_a = **minimum riprap apron length (ft); and**
D_o = **diameter or width of culvert or storm drain (ft).**

1 **Proposed Detention Basin Inlet (Storm Drain Pipes Outlet)**

Description	Units	Value
Pipe Diameter (D)	Inches (")	30
Velocity (V)	Feet per Second (ft/s)	11.91
Discharge (Q)	Cubic Feet per Second (ft^3/s)	21.8

	Rock Classification	Size of Stone d_{50} (ft)	Length (ft)
Riprap Size:	1/2 Ton *	2.3	10 Min.

2 **Proposed Detention Basin Outlet**

Description	Units	Value
Pipe Diameter. (D)	Inches (")	36
Velocity (V)	Feet per Second (ft/s)	14.36
Discharge (Q)	Cubic Feet per Second (ft^3/s)	11.28

	Rock Classification	Size of Stone d_{50} (ft)	Length (ft)
Riprap Size:	1 Ton	2.9	12 Min.

* A conservative rock classification and size was chosen based on the Table 7-1

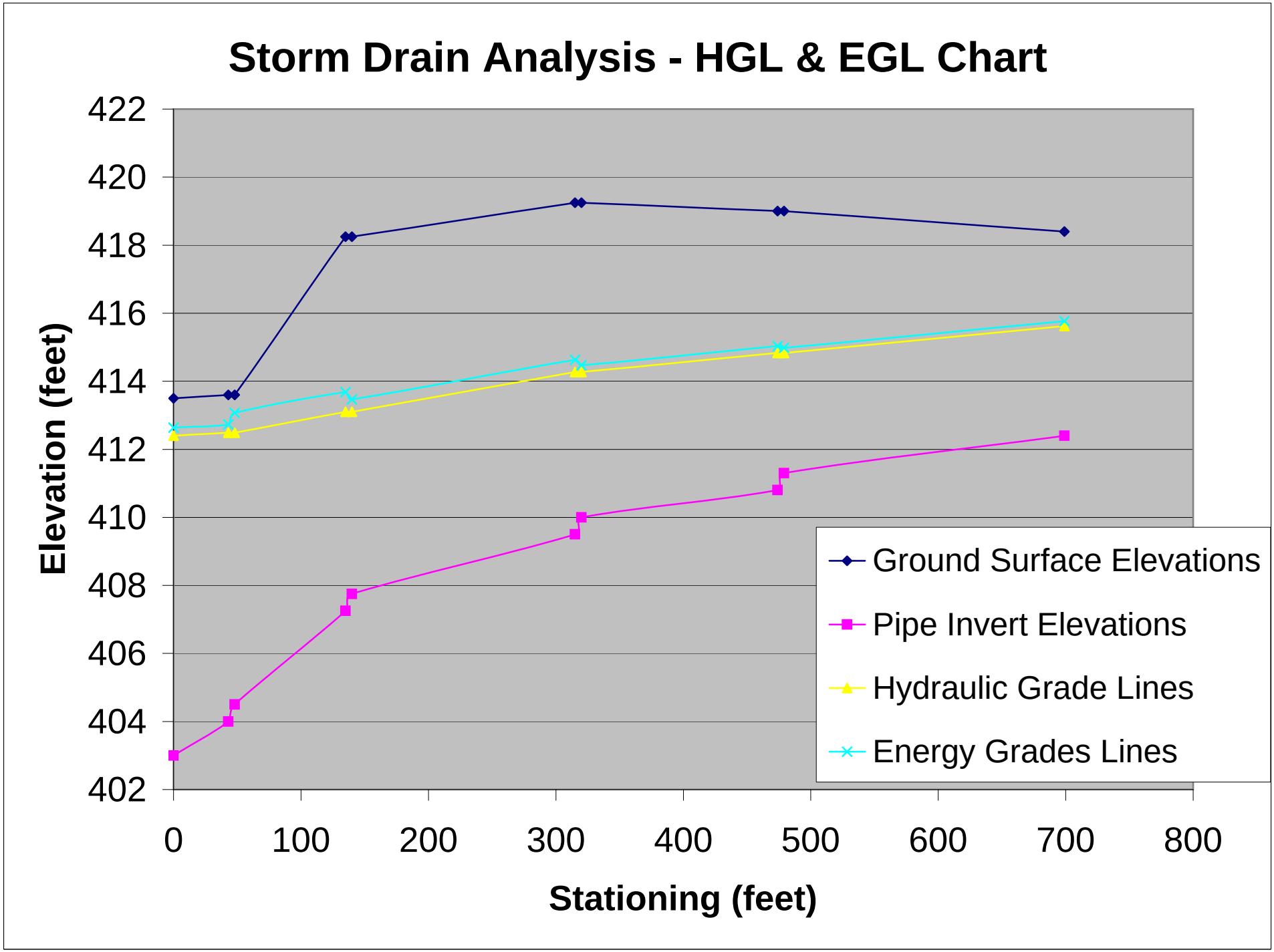
Storm Drain Analysis - HGL & EGL Chart
Elevation (feet)
422
420
418
416
414
412
410
408
406
404
402
0
100
200
300
400
500
600
700
800
Stationing (feet)
Ground Surface Elevations
Pipe Invert Elevations
Hydraulic Grade Lines
Energy Grades Lines

BACKWATER ANALYSIS STRUCTURE 1 TO DETENTION BASIN: 50-Year Storm

STA.	Ground Surface EL.	INV.	D	W.S.	SECTION	A (SF)	K =(2g)n^2 2.21	V (FPS)	Q (CFS)	V^2/2g (FT)	R$^{4/3}$	S_f	AVG. S_f	L	H_f	H_b	H_j	H_m	H_t	H.G.	E.G.	"n"	TOTAL LOSS	K
0+00	405	403.00	30	412.40	RCP	4.91	0.00492	3.92	19.24	0.24	0.53436748	0.002198								412.40	412.64	0.013		
LINE 7													0.00471291	43	0.20266								0.20265525	
0+43	412.5	404.00	24	412.60	RCP	3.14	0.00492	6.12	19.24	0.58	0.39685026	0.007227								412.60	413.19	0.013		
MH 7													0.00722733	5	0.03614	0.2912							0.32733879	0.5
0+48	418.25	404.50	24	412.93	RCP	3.14	0.00492	6.12	19.24	0.58	0.39685026	0.007227								412.93	413.51	0.013		
LINE 6													0.00722733	87	0.62878								0.62877809	
1+35	418.25	406.35	24	413.56	RCP	3.14	0.00492	6.12	19.24	0.58	0.39685026	0.007227								413.56	414.14	0.013		
BOX 6													0.0069468	5	0.03473	0.2912							0.32593611	0.5
1+40	419.25	406.85	18	413.88	RCP	1.77	0.00492	4.86	8.58	0.37	0.27042179	0.006666								413.88	414.25	0.013		
LINE 3													0.00666626	175	1.1666								1.16659622	
3+15	419.25	409.50	18	415.05	RCP	1.77	0.00492	4.86	8.58	0.37	0.27042179	0.006666								415.05	415.42	0.013		
BOX 3													0.00515307	5	0.02577	0.18303							0.20879182	0.5
3+20	419	410.00	18	415.26	RCP	1.77	0.00492	3.59	6.34	0.20	0.27042179	0.003640								415.26	415.46	0.013		
LINE 2													0.00363987	154	0.56054								0.56054073	
4+74	419	410.80	18	415.82	RCP	1.77	0.00492	3.59	6.34	0.20	0.27042179	0.003640								415.82	416.02	0.013		
BOX 2													0.00360376	5	0.01802	0.09994							0.11795387	0.5
4+79	418.4	411.30	15	415.94	RCP	1.23	0.00492	3.15	3.86	0.15	0.21206388	0.003568								415.94	416.09	0.013		
LINE 1													0.00356765	220	0.78488	0.01536							0.80024627	0.1
6+99	418.4	412.40	15	416.74	RCP	1.23	0.00492	3.15	3.86	0.15	0.21206388	0.003568								416.74	416.89	0.013		
BOX 1																								

Worksheet for Backwater 100YR MH-Detention Basin Inlet

Project Description

Friction Method	Manning Formula
Solve For	Pressure at 1

Input Data

Pressure 2	9.40	feet H2O
Elevation 1	404.00	ft
Elevation 2	403.00	ft
Length	43.00	ft
Roughness Coefficient	0.013	
Diameter	30.00	in
Discharge	19.24	ft^3/s

Results

Pressure 1	8.49	feet H2O
Headloss	0.09	ft
Energy Grade 1	412.73	ft
Energy Grade 2	412.64	ft
Hydraulic Grade 1	412.49	ft
Hydraulic Grade 2	412.40	ft
Flow Area	4.91	ft^2
Wetted Perimeter	7.85	ft
Velocity	3.92	ft/s
Velocity Head	0.24	ft
Friction Slope	0.00220	ft/ft

Worksheet for Baskwater 100YR S.6.-MH

Project Description

Friction Method	Manning Formula
Solve For	Pressure at 1

Input Data

Pressure 2	7.99	feet H2O
Elevation 1	406.35	ft
Elevation 2	404.50	ft
Length	84.00	ft
Roughness Coefficient	0.013	
Diameter	24.00	in
Discharge	19.24	ft^3/s

Results

Pressure 1	6.75	feet H2O
Headloss	0.61	ft
Energy Grade 1	413.68	ft
Energy Grade 2	413.07	ft
Hydraulic Grade 1	413.10	ft
Hydraulic Grade 2	412.49	ft
Flow Area	3.14	ft^2
Wetted Perimeter	6.28	ft
Velocity	6.12	ft/s
Velocity Head	0.58	ft
Friction Slope	0.00723	ft/ft

Worksheet for Backwater 100YR S.3.-S.6.

Project Description

Friction Method	Manning Formula
Solve For	Pressure at 1

Input Data

Pressure 2	6.25	feet H2O
Elevation 1	409.50	ft
Elevation 2	406.85	ft
Length	175.00	ft
Roughness Coefficient	0.013	
Diameter	18.00	in
Discharge	8.58	ft^3/s

Results

Pressure 1	4.77	feet H2O
Headloss	1.17	ft
Energy Grade 1	414.63	ft
Energy Grade 2	413.47	ft
Hydraulic Grade 1	414.27	ft
Hydraulic Grade 2	413.10	ft
Flow Area	1.77	ft^2
Wetted Perimeter	4.71	ft
Velocity	4.86	ft/s
Velocity Head	0.37	ft
Friction Slope	0.00667	ft/ft

Worksheet for Backwater 100YR S.2.-S.3.

Project Description

Friction Method	Manning Formula
Solve For	Pressure at 1

Input Data

Pressure 2	4.27	feet H2O
Elevation 1	410.80	ft
Elevation 2	410.00	ft
Length	154.00	ft
Roughness Coefficient	0.013	
Diameter	18.00	in
Discharge	6.34	ft^3/s

Results

Pressure 1	4.03	feet H2O
Headloss	0.56	ft
Energy Grade 1	415.03	ft
Energy Grade 2	414.47	ft
Hydraulic Grade 1	414.83	ft
Hydraulic Grade 2	414.27	ft
Flow Area	1.77	ft^2
Wetted Perimeter	4.71	ft
Velocity	3.59	ft/s
Velocity Head	0.20	ft
Friction Slope	0.00364	ft/ft

Worksheet for Backwater 100YR S.1.-S.2.

Project Description

Friction Method	Manning Formula
Solve For	Pressure at 1

Input Data

Pressure 2	3.53	feet H2O
Elevation 1	412.40	ft
Elevation 2	411.30	ft
Length	220.00	ft
Roughness Coefficient	0.013	
Diameter	15.00	in
Discharge	3.86	ft^3/s

Results

Pressure 1	3.22	feet H2O
Headloss	0.79	ft
Energy Grade 1	415.77	ft
Energy Grade 2	414.98	ft
Hydraulic Grade 1	415.62	ft
Hydraulic Grade 2	414.83	ft
Flow Area	1.23	ft^2
Wetted Perimeter	3.93	ft
Velocity	3.15	ft/s
Velocity Head	0.15	ft
Friction Slope	0.00357	ft/ft

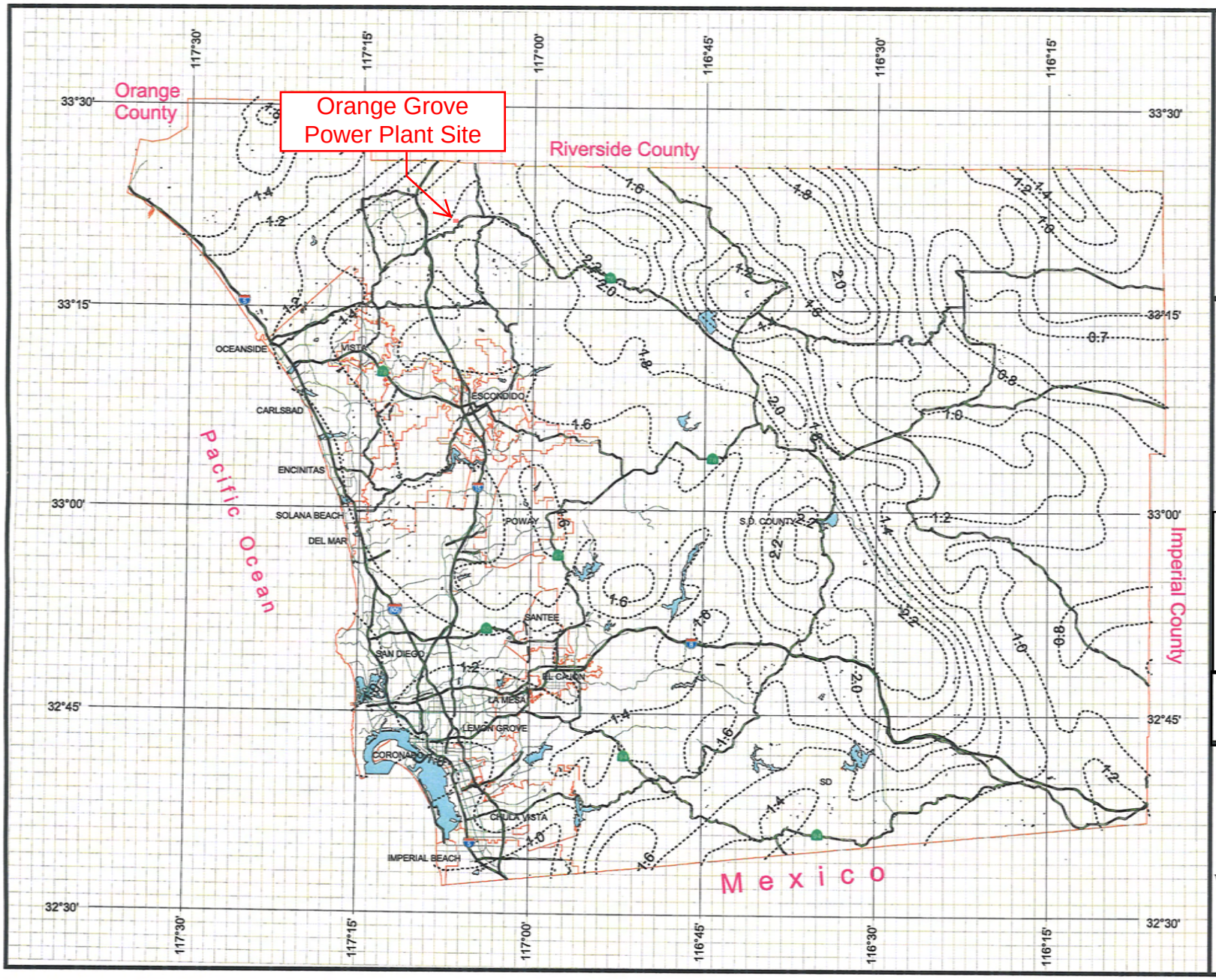

County of San Diego Hydrology Manual

Rainfall Isopluvials

2 Year Rainfall Event - 6 Hours

Isopluvial (inches)

ORANGE GROVE ENERGY L.P.
Schaumburg, IL

MUP 07-009

ORANGE GROVE POWER PLANT PROJECT

DPW GIS
Department of Public Works Geographic Information Services

SanGIS
We Have San Diego Covered!

THIS MAP IS PROVIDED WITHOUT WARRANTY OF ANY KIND, EITHER EXPRESS OR IMPLIED, INCLUDING, BUT NOT LIMITED TO, THE IMPLIED WARRANTIES OF MERCHANTABILITY AND FITNESS FOR A PARTICULAR PURPOSE. Copyright SanGIS. All Rights Reserved.

This products may contain information from the SANDAG Regional Information System which cannot be reproduced without the written permission of SANDAG.

This product may contain information which has been reproduced with permission granted by Thomas Brothers Maps.

N W E S

3 0 3 Miles

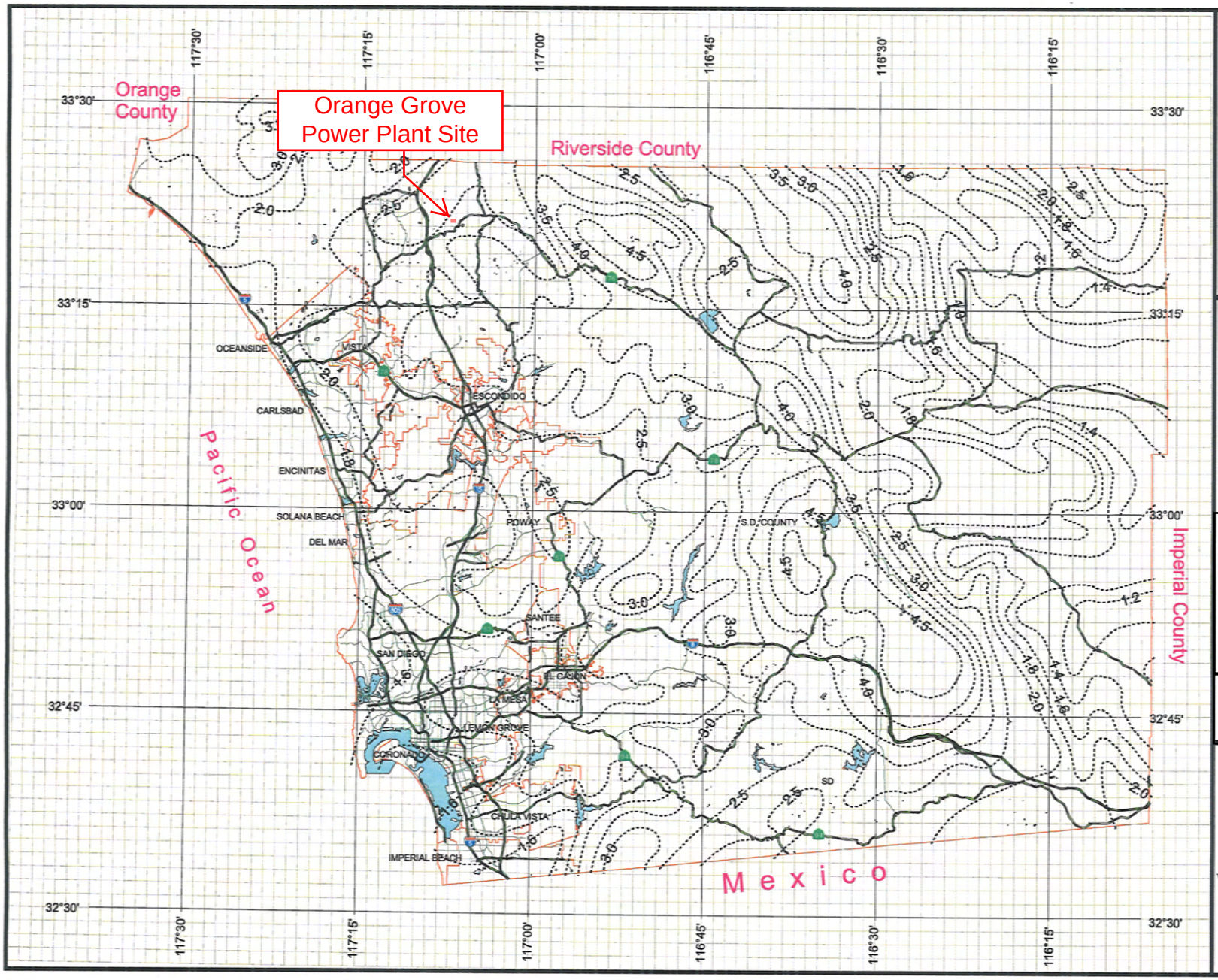

County of San Diego Hydrology Manual

Rainfall Isopluvials

2 Year Rainfall Event - 24 Hours

Isopluvial (inches)

ORANGE GROVE ENERGY L.P.

Schaumburg, IL

MUP 07-009

ORANGE GROVE POWER PLANT PROJECT

DPW GIS — Department of Public Works Geographic Information Services

SanGIS — We Have San Diego Covered!

N W E S

3 0 3 Miles

THIS MAP IS PROVIDED WITHOUT WARRANTY OF ANY KIND, EITHER EXPRESS OR IMPLIED, INCLUDING, BUT NOT LIMITED TO, THE IMPLIED WARRANTIES OF MERCHANTABILITY AND FITNESS FOR A PARTICULAR PURPOSE. Copyright SanGIS. All Rights Reserved.

This products may contain information from the SANDAG Regional Information System which cannot be reproduced without the written permission of SANDAG.

This product may contain information which has been reproduced with permission granted by Thomas Brothers Maps.

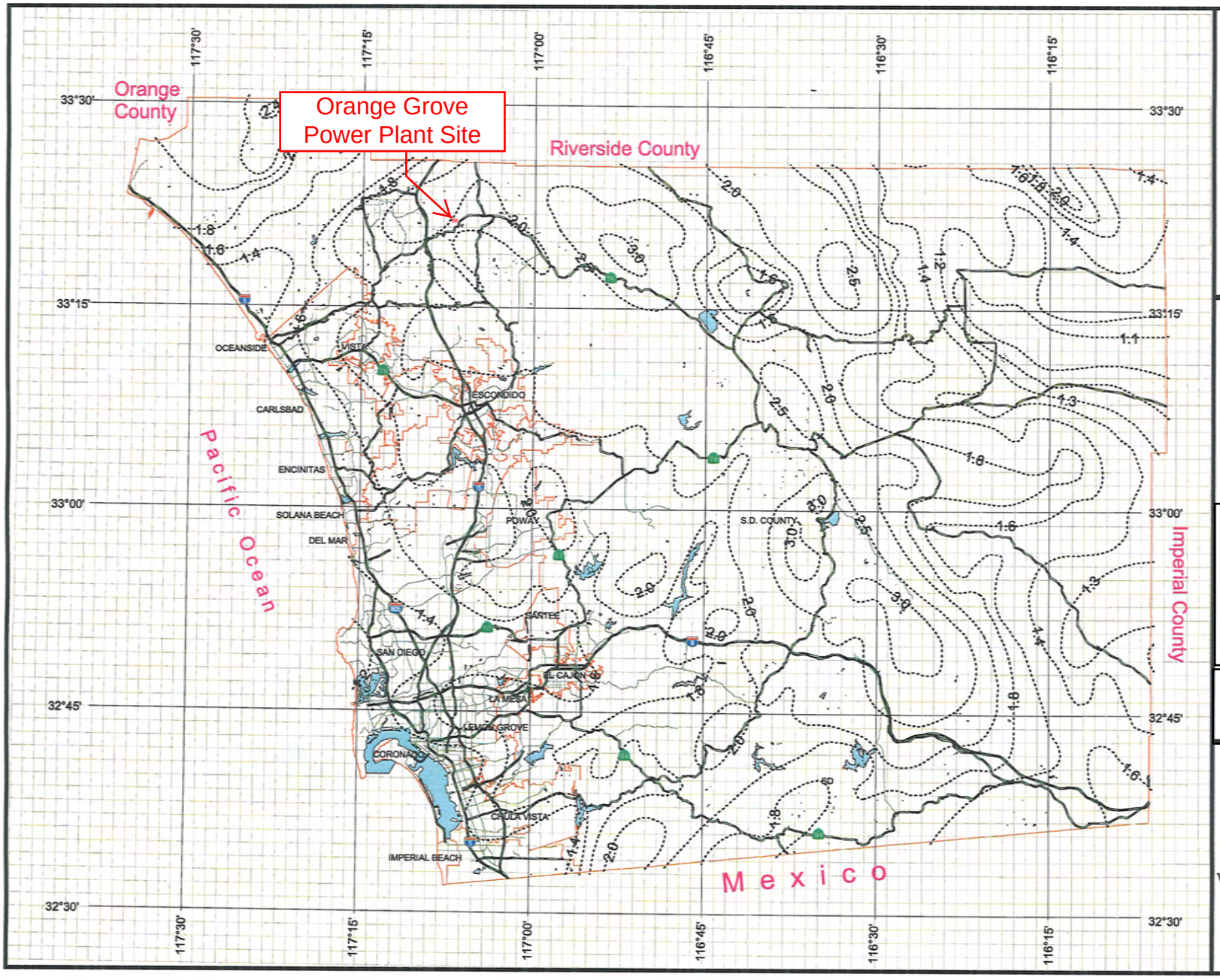

County of San Diego Hydrology Manual

Rainfall Isopluvials

5 Year Rainfall Event - 6 Hours

Isopluvial (inches)

ORANGE GROVE ENERGY L.P.

Schaumburg, IL

MUP 07-009

ORANGE GROVE POWER PLANT PROJECT

DPW GIS

SanGIS

We Have San Diego Covered!

THIS MAP IS PROVIDED WITHOUT WARRANTY OF ANY KIND, EITHER EXPRESS OR IMPLIED, INCLUDING, BUT NOT LIMITED TO, THE IMPLIED WARRANTIES OF MERCHANTABILITY AND FITNESS FOR A PARTICULAR PURPOSE. Copyright SanGIS. All Rights Reserved.

This products may contain information from the SANDAG Regional Information System which cannot be reproduced without the written permission of SANDAG.

This product may contain information which has been reproduced with permission granted by Thomas Brothers Maps.

N W E S

3 0 3 Miles

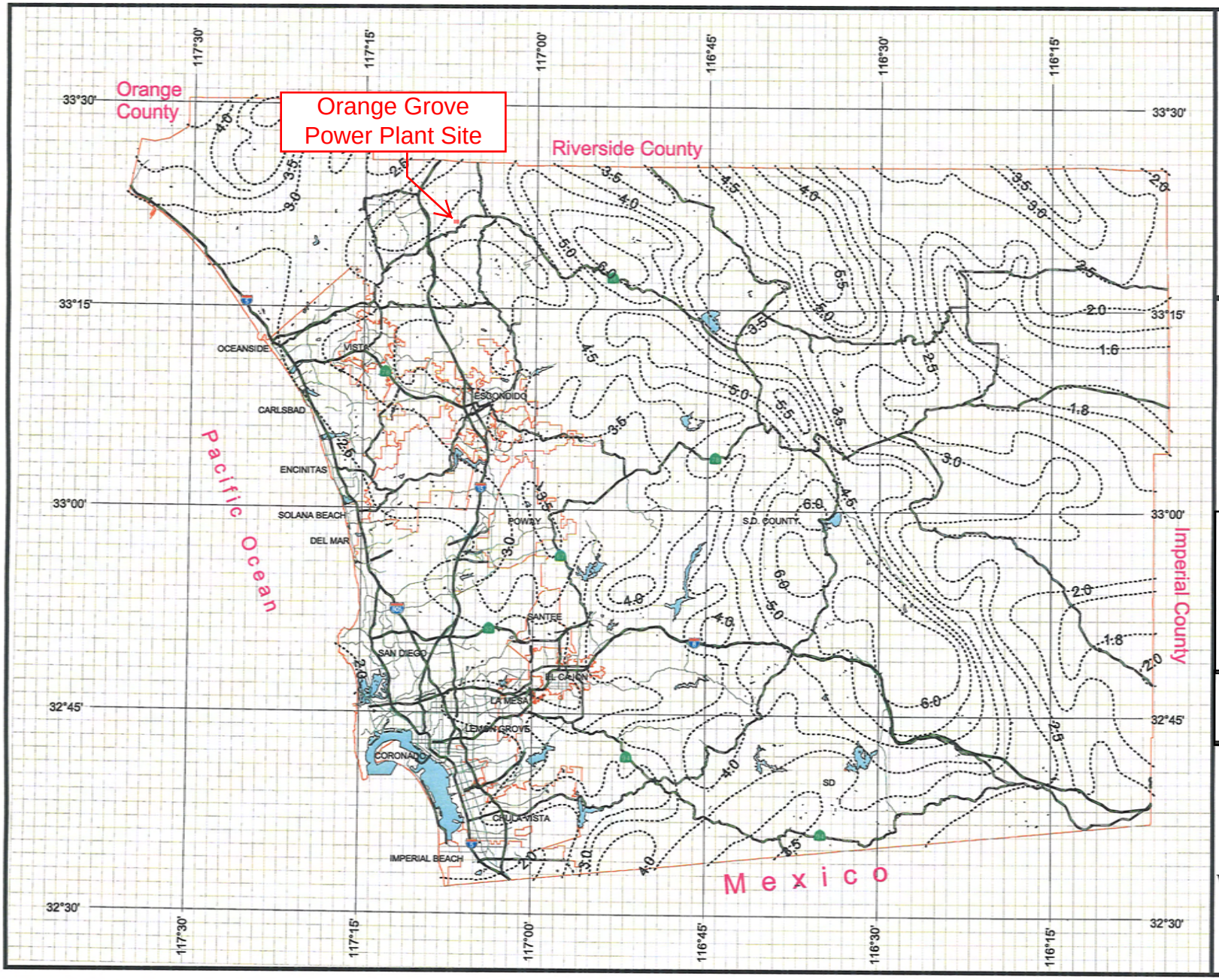

County of San Diego Hydrology Manual

Rainfall Isopluvials

5 Year Rainfall Event - 24 Hours

Isopluvial (inches)

ORANGE GROVE ENERGY L.P.
Schaumburg, IL

MUP 07-009

ORANGE GROVE POWER PLANT PROJECT

DPW GIS
Department of Public Works Geographic Information Services

SanGIS
We Have San Diego Covered!

N W E S

3 0 3 Miles

THIS MAP IS PROVIDED WITHOUT WARRANTY OF ANY KIND, EITHER EXPRESS OR IMPLIED, INCLUDING, BUT NOT LIMITED TO, THE IMPLIED WARRANTIES OF MERCHANTABILITY AND FITNESS FOR A PARTICULAR PURPOSE. Copyright SanGIS. All Rights Reserved.

This products may contain information from the SANDAG Regional Information System which cannot be reproduced without the written permission of SANDAG.

This product may contain information which has been reproduced with permission granted by Thomas Brothers Maps.

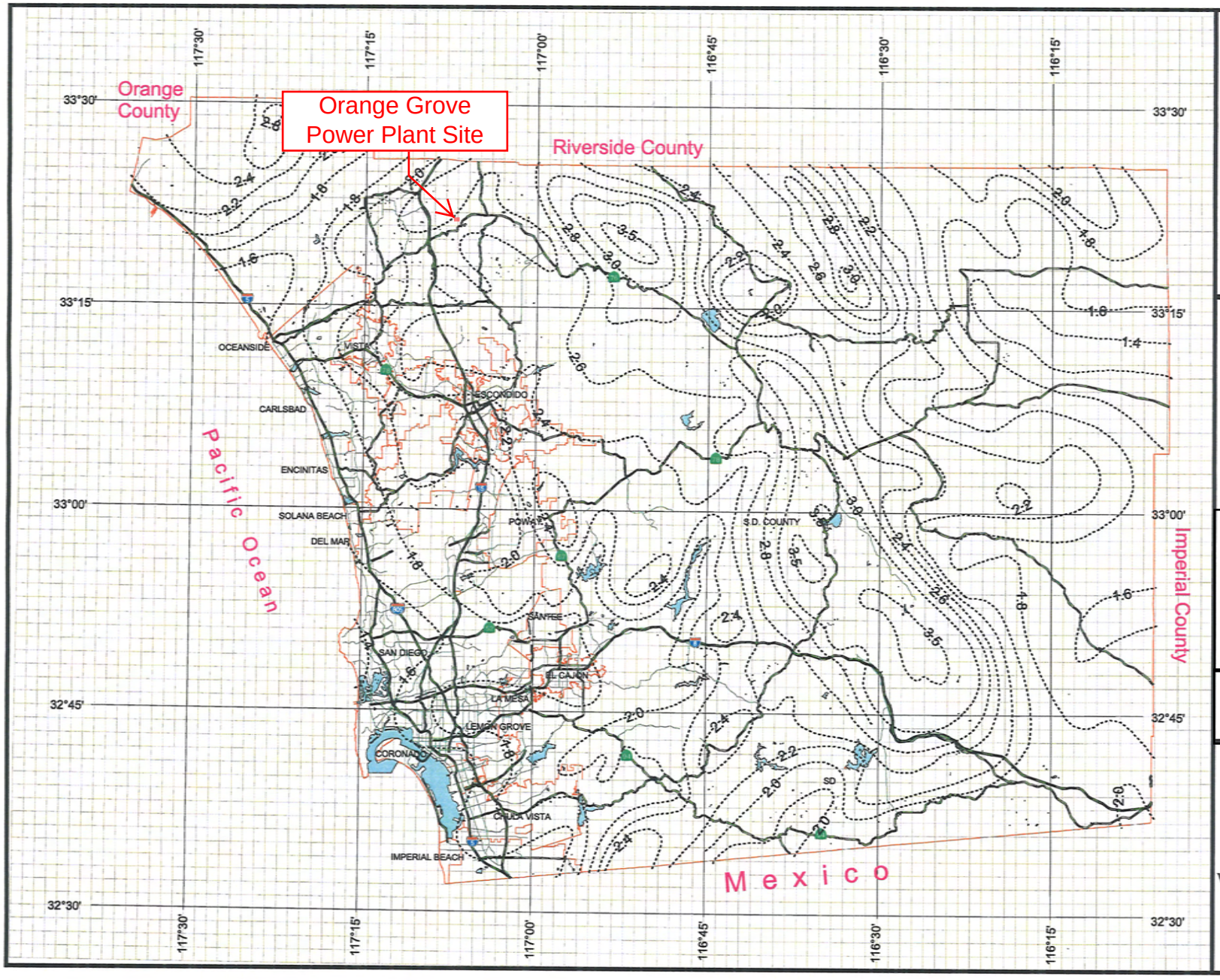

County of San Diego Hydrology Manual

Rainfall Isopluvials

10 Year Rainfall Event - 6 Hours

Isopluvial (inches)

ORANGE GROVE ENERGY L.P.

Schaumburg, IL

MUP 07-009

ORANGE GROVE POWER PLANT PROJECT

DPW GIS

SanGIS

We Have San Diego Covered!

N W E S

3 0 3 Miles

THIS MAP IS PROVIDED WITHOUT WARRANTY OF ANY KIND, EITHER EXPRESS OR IMPLIED, INCLUDING, BUT NOT LIMITED TO, THE IMPLIED WARRANTIES OF MERCHANTABILITY AND FITNESS FOR A PARTICULAR PURPOSE. Copyright SanGIS. All Rights Reserved.

This products may contain information from the SANDAG Regional Information System which cannot be reproduced without the written permission of SANDAG.

This product may contain information which has been reproduced with permission granted by Thomas Brothers Maps.

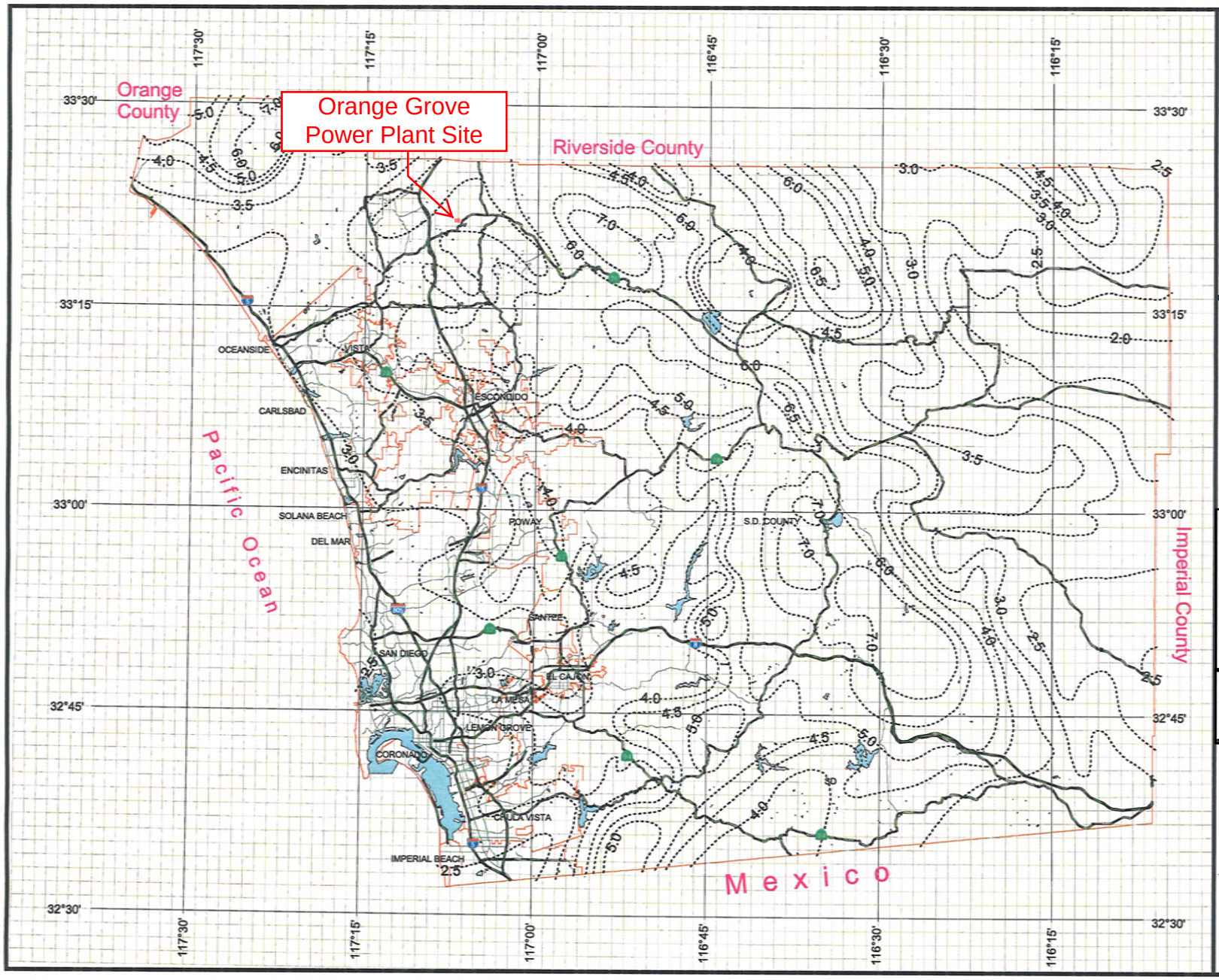

County of San Diego Hydrology Manual

Rainfall Isopluvials

10 Year Rainfall Event - 24 Hours

Isopluvial (inches)

ORANGE GROVE ENERGY L.P.
Schaumburg, IL

MUP 07-009

ORANGE GROVE POWER PLANT PROJECT

DPW GIS
Department of Public Works Geographic Information Services

SanGIS
We Have San Diego Covered!

N
W E
S

3 0 3 Miles

THIS MAP IS PROVIDED WITHOUT WARRANTY OF ANY KIND, EITHER EXPRESS OR IMPLIED, INCLUDING, BUT NOT LIMITED TO, THE IMPLIED WARRANTIES OF MERCHANTABILITY AND FITNESS FOR A PARTICULAR PURPOSE. Copyright SanGIS. All Rights Reserved.

This products may contain information from the SANDAG Regional Information System which cannot be reproduced without the written permission of SANDAG.

This product may contain information which has been reproduced with permission granted by Thomas Brothers Maps.

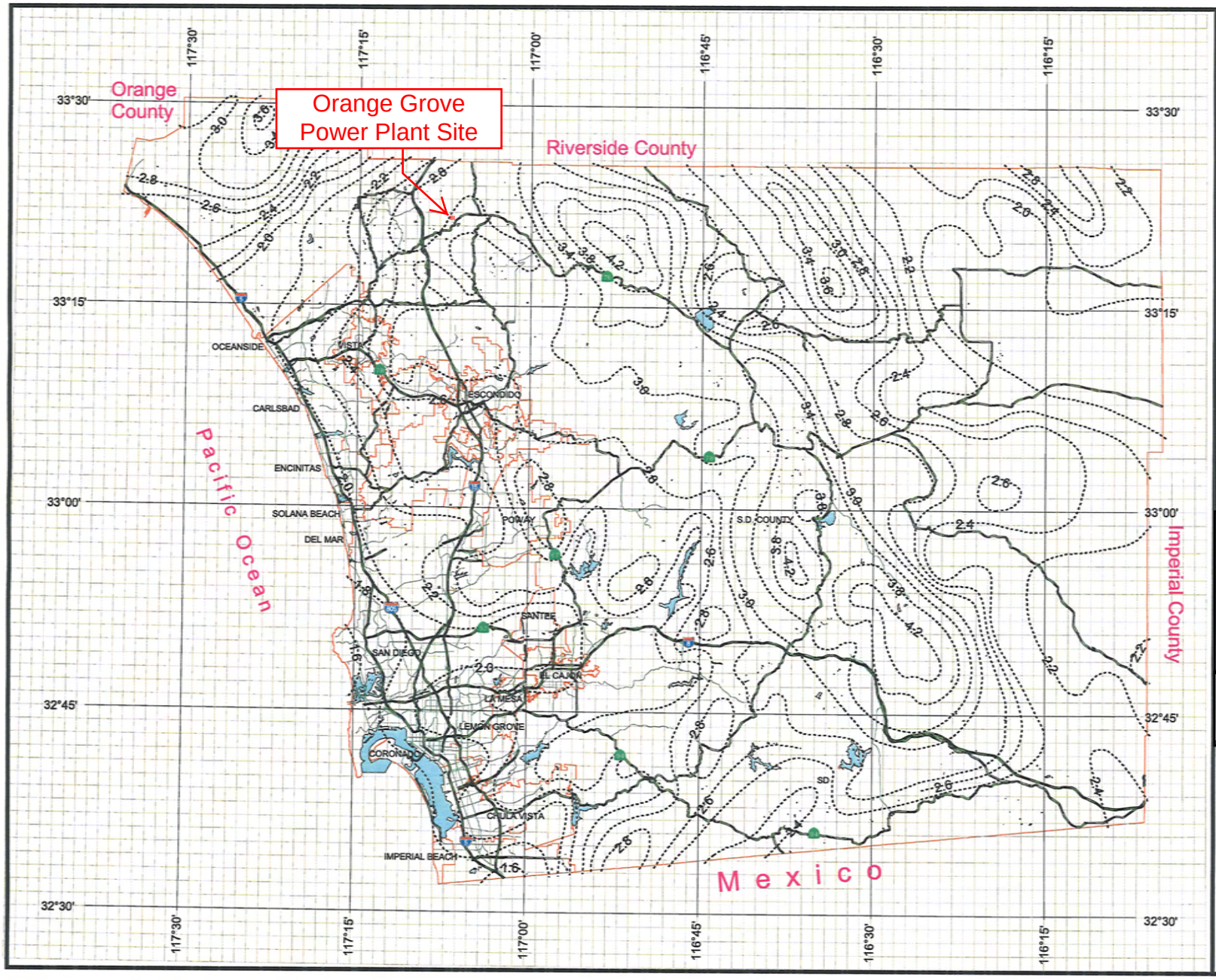

County of San Diego Hydrology Manual

Rainfall Isopluvials

25 Year Rainfall Event - 6 Hours

Isopluvial (inches)

ORANGE GROVE ENERGY L.P.

Schaumburg, IL

MUP 07-009

ORANGE GROVE POWER PLANT PROJECT

DPW GIS — Department of Public Works Geographic Information Services

SanGIS — We Have San Diego Covered!

N W E S

3 0 3 Miles

THIS MAP IS PROVIDED WITHOUT WARRANTY OF ANY KIND, EITHER EXPRESS OR IMPLIED, INCLUDING, BUT NOT LIMITED TO, THE IMPLIED WARRANTIES OF MERCHANTABILITY AND FITNESS FOR A PARTICULAR PURPOSE. Copyright SanGIS. All Rights Reserved.

This products may contain information from the SANDAG Regional Information System which cannot be reproduced without the written permission of SANDAG.

This product may contain information which has been reproduced with permission granted by Thomas Brothers Maps.

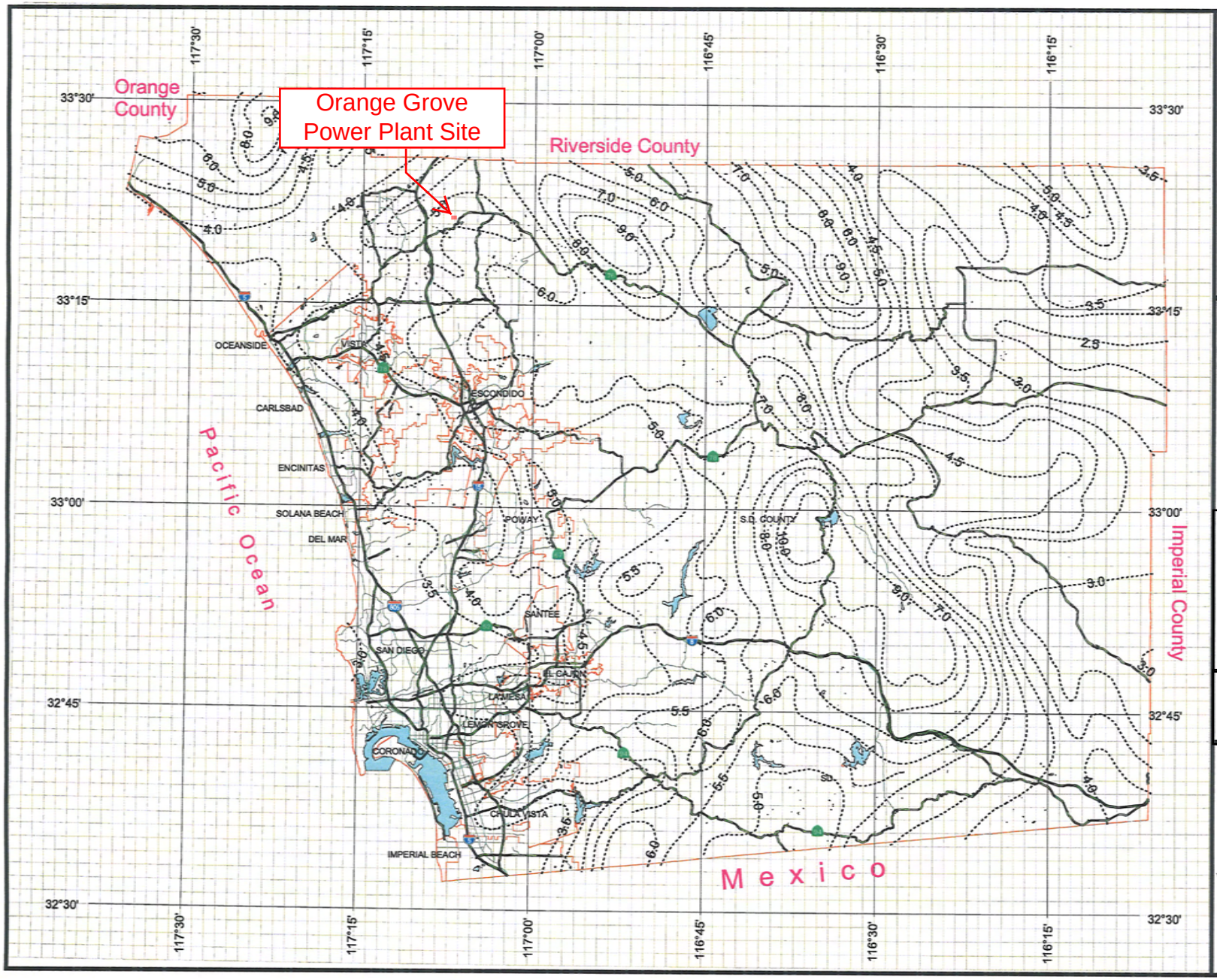

County of San Diego Hydrology Manual

Rainfall Isopluvials

25 Year Rainfall Event - 24 Hours

Isopluvial (inches)

ORANGE GROVE ENERGY L.P.
Schaumburg, IL

MUP 07-009

ORANGE GROVE POWER PLANT PROJECT

DPW GIS
Department of Public Works Geographic Information Services

SanGIS
We Have San Diego Covered!

N
W E
S

3 0 3 Miles

THIS MAP IS PROVIDED WITHOUT WARRANTY OF ANY KIND, EITHER EXPRESS OR IMPLIED, INCLUDING, BUT NOT LIMITED TO, THE IMPLIED WARRANTIES OF MERCHANTABILITY AND FITNESS FOR A PARTICULAR PURPOSE. Copyright SanGIS. All Rights Reserved.

This products may contain information from the SANDAG Regional Information System which cannot be reproduced without the written permission of SANDAG.

This product may contain information which has been reproduced with permission granted by Thomas Brothers Maps.

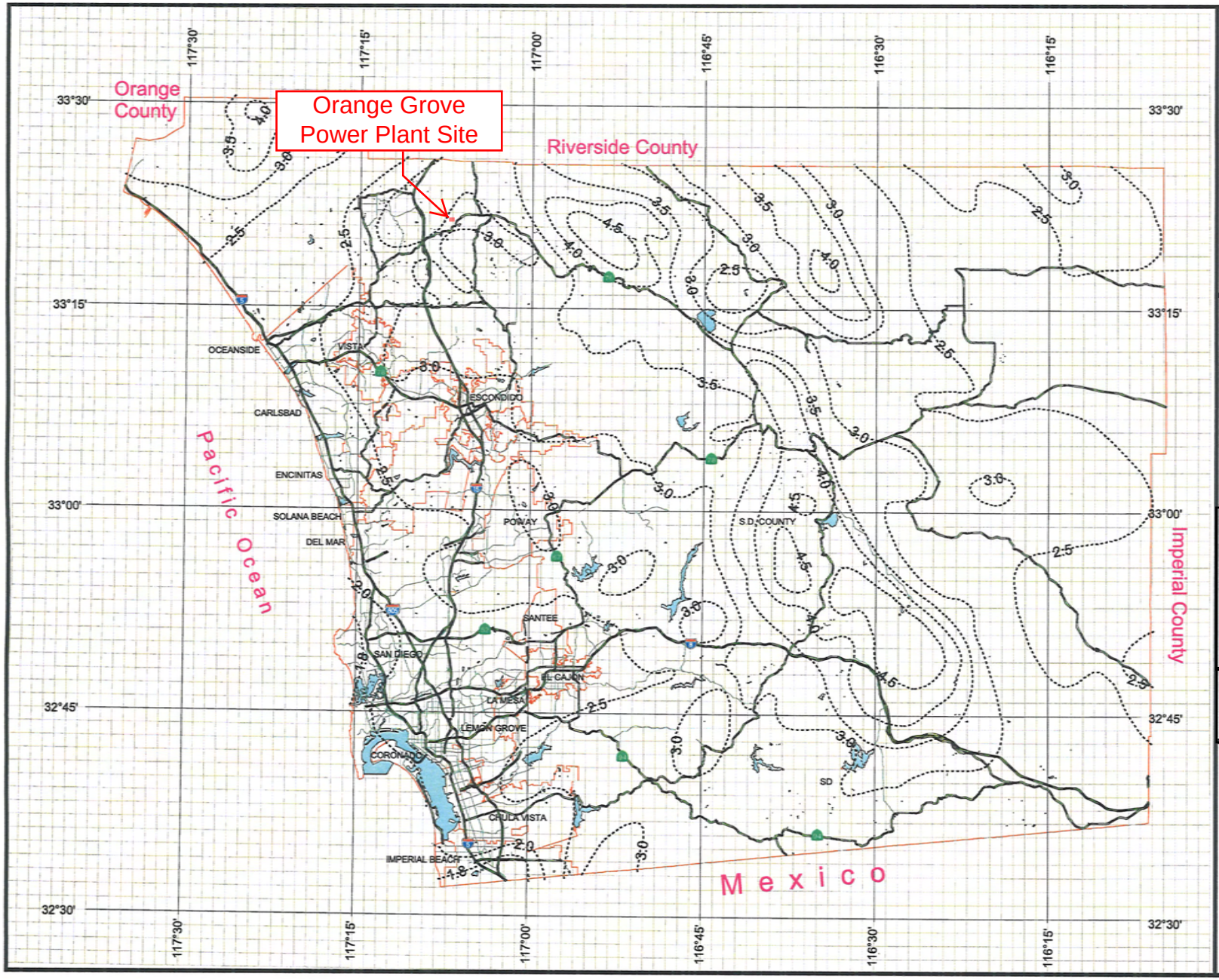

County of San Diego Hydrology Manual

Rainfall Isopluvials

50 Year Rainfall Event - 6 Hours

Isopluvial (inches)

ORANGE GROVE ENERGY L.P.

Schaumburg, IL

MUP 07-009

ORANGE GROVE POWER PLANT PROJECT

DPW GIS

SanGIS We Have San Diego Covered!

THIS MAP IS PROVIDED WITHOUT WARRANTY OF ANY KIND, EITHER EXPRESS OR IMPLIED, INCLUDING, BUT NOT LIMITED TO, THE IMPLIED WARRANTIES OF MERCHANTABILITY AND FITNESS FOR A PARTICULAR PURPOSE. Copyright SanGIS. All Rights Reserved.

This products may contain information from the SANDAG Regional Information System which cannot be reproduced without the written permission of SANDAG.

This product may contain information which has been reproduced with permission granted by Thomas Brothers Maps.

N W E S

3 0 3 Miles

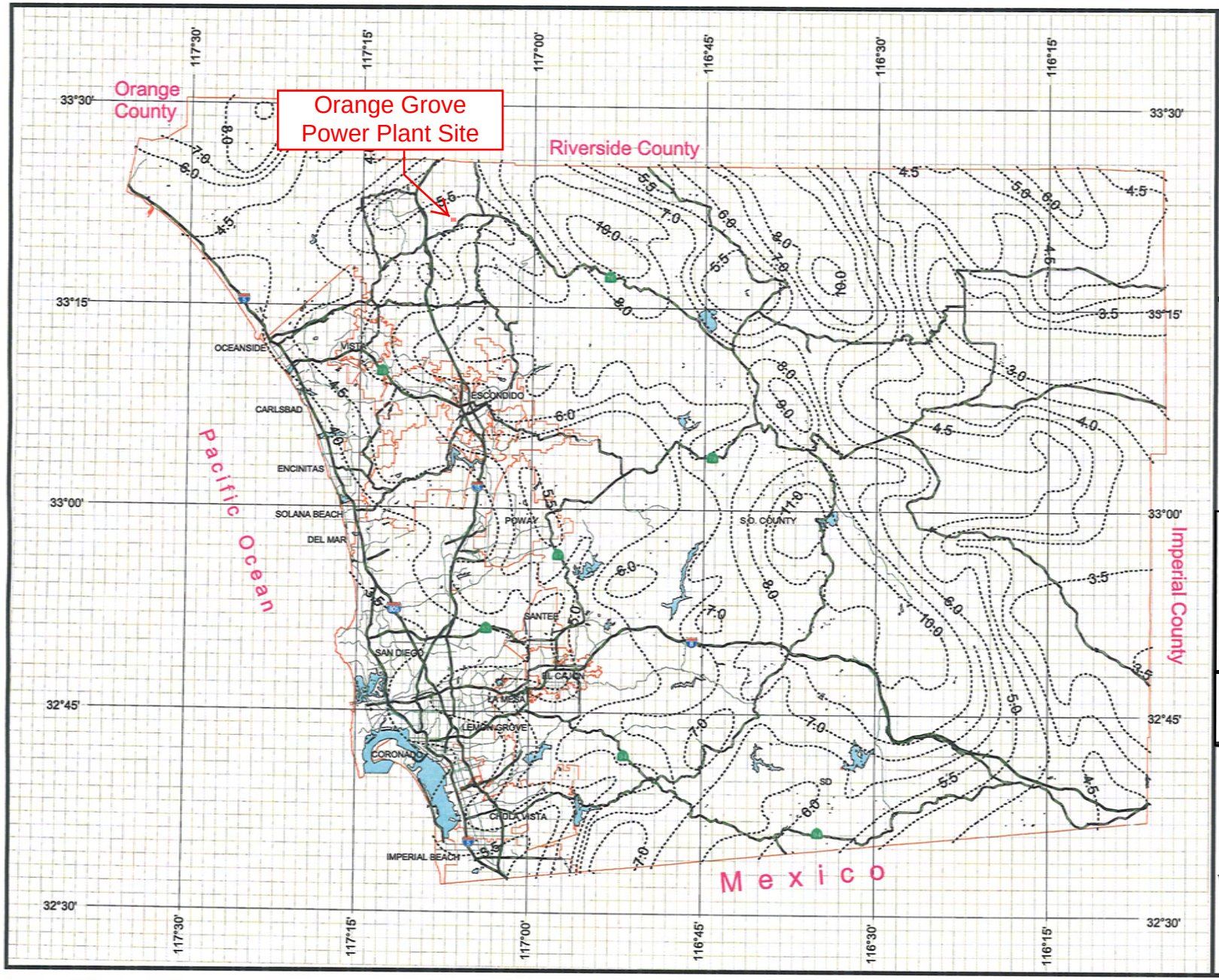

County of San Diego Hydrology Manual

Rainfall Isopluvials

50 Year Rainfall Event - 24 Hours

Isopluvial (inches)

ORANGE GROVE ENERGY L.P.

Schaumburg, IL

MUP 07-009

ORANGE GROVE POWER PLANT PROJECT

DPW GIS

SanGIS We Have San Diego Covered!

THIS MAP IS PROVIDED WITHOUT WARRANTY OF ANY KIND, EITHER EXPRESS OR IMPLIED, INCLUDING, BUT NOT LIMITED TO, THE IMPLIED WARRANTIES OF MERCHANTABILITY AND FITNESS FOR A PARTICULAR PURPOSE. Copyright SanGIS. All Rights Reserved.

This products may contain information from the SANDAG Regional Information System which cannot be reproduced without the written permission of SANDAG.

This product may contain information which has been reproduced with permission granted by Thomas Brothers Maps.

N W E S

3 0 3 Miles

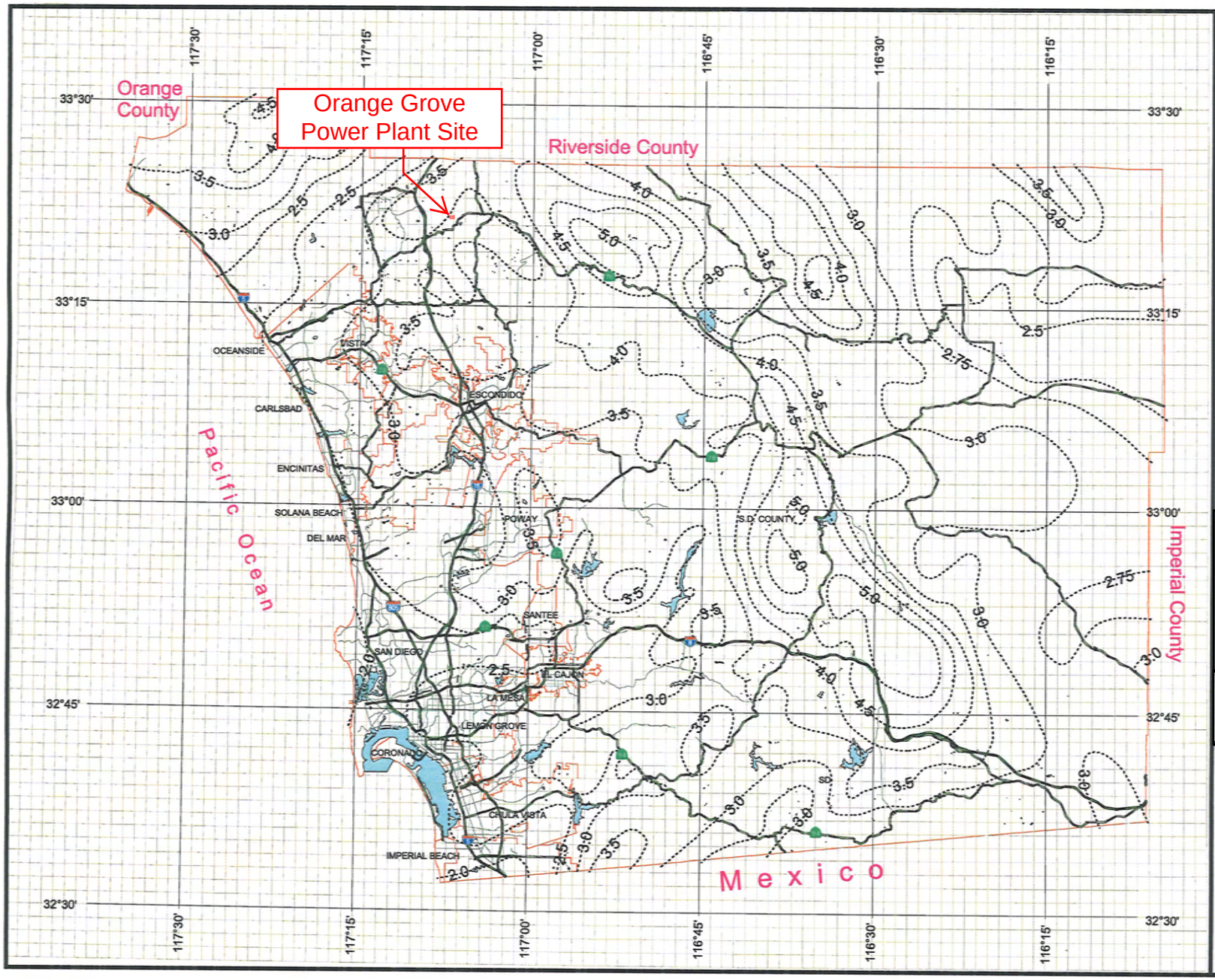

County of San Diego Hydrology Manual

Rainfall Isopluvials

100 Year Rainfall Event - 6 Hours

Isopluvial (inches)

ORANGE GROVE ENERGY L.P.
Schaumburg, IL

MUP 07-009

ORANGE GROVE POWER PLANT PROJECT

DPW GIS
Department of Public Works Geographic Information Services

SanGIS
We Have San Diego Covered!

THIS MAP IS PROVIDED WITHOUT WARRANTY OF ANY KIND, EITHER EXPRESS OR IMPLIED, INCLUDING, BUT NOT LIMITED TO, THE IMPLIED WARRANTIES OF MERCHANTABILITY AND FITNESS FOR A PARTICULAR PURPOSE. Copyright SanGIS. All Rights Reserved.

This products may contain information from the SANDAG Regional Information System which cannot be reproduced without the written permission of SANDAG.

This product may contain information which has been reproduced with permission granted by Thomas Brothers Maps.

N W E S

3 0 3 Miles

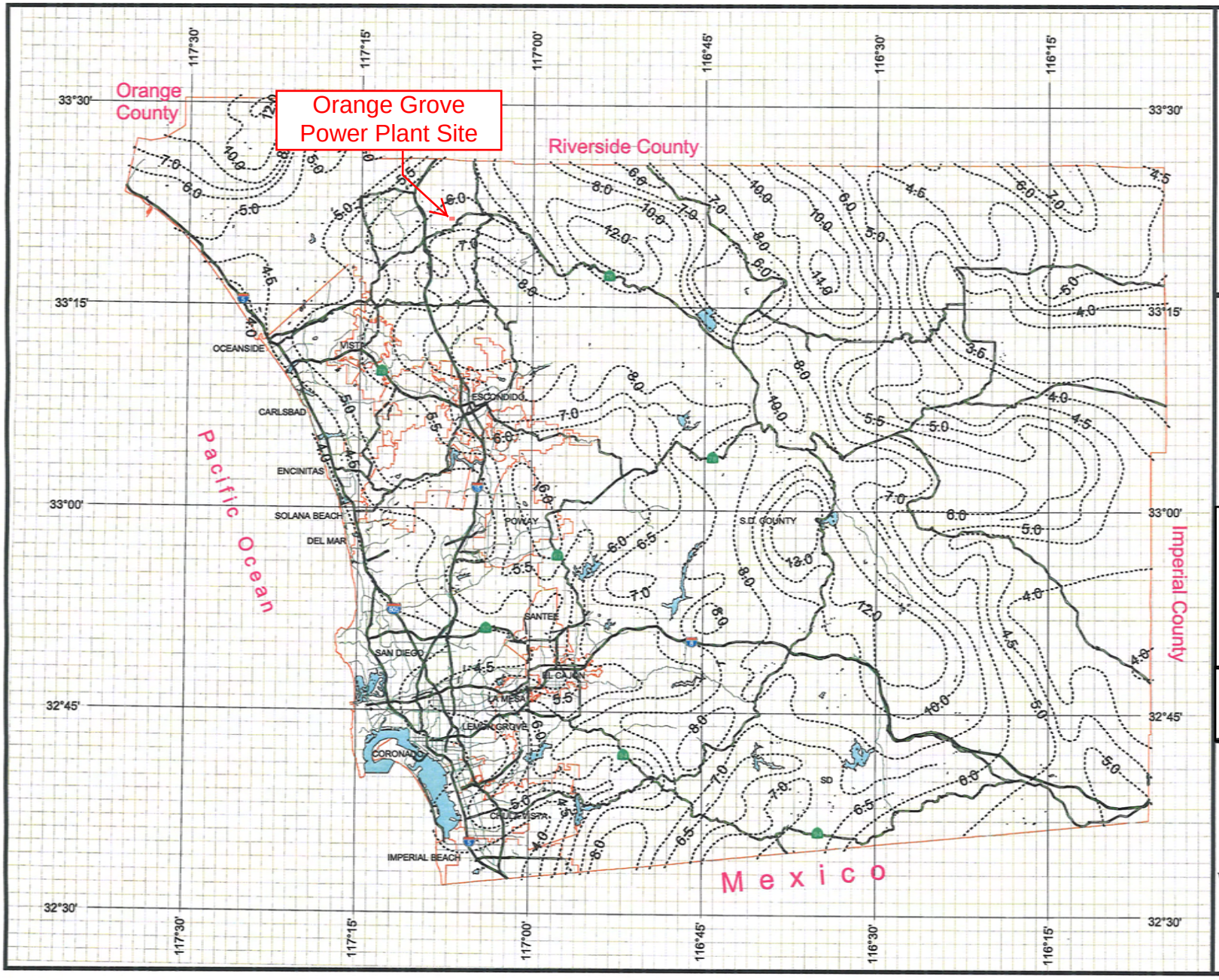

County of San Diego Hydrology Manual

Rainfall Isopluvials

100 Year Rainfall Event - 24 Hours

Isopluvial (inches)

ORANGE GROVE ENERGY L.P.

Schaumburg, IL

MUP 07-009

ORANGE GROVE POWER PLANT PROJECT

DPW GIS

Department of Public Works Geographic Information Services

SanGIS

We Have San Diego Covered!

THIS MAP IS PROVIDED WITHOUT WARRANTY OF ANY KIND, EITHER EXPRESS OR IMPLIED, INCLUDING, BUT NOT LIMITED TO, THE IMPLIED WARRANTIES OF MERCHANTABILITY AND FITNESS FOR A PARTICULAR PURPOSE. Copyright SanGIS. All Rights Reserved.

This products may contain information from the SANDAG Regional Information System which cannot be reproduced without the written permission of SANDAG.

This product may contain information which has been reproduced with permission granted by Thomas Brothers Maps.

N W E S

3 0 3 Miles