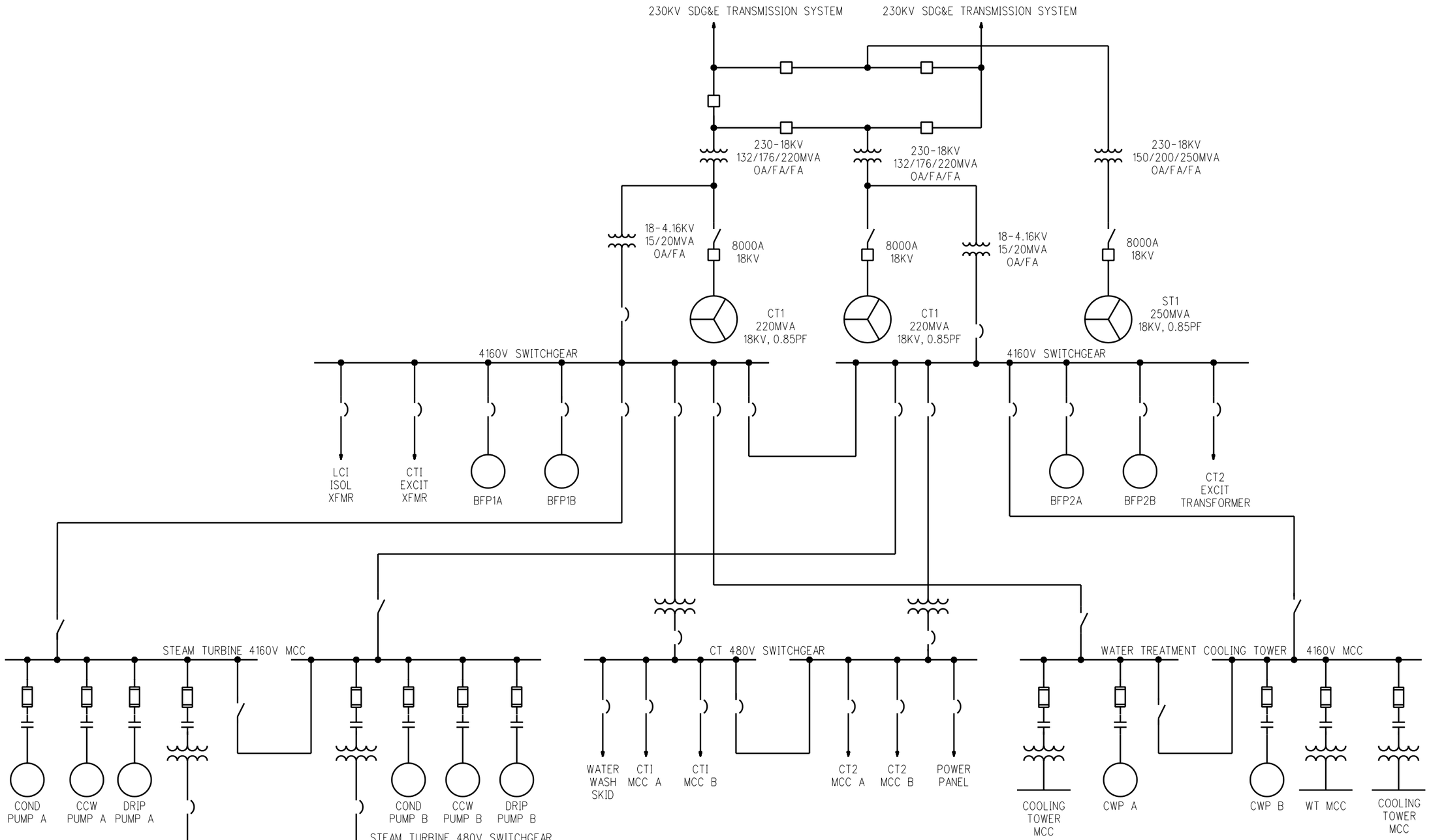

Burns & McDonnell
SINCE 1898

date JUNE 25, 2001
designed D. STEPHENS

FIGURE 2.4-5
Electrical One-Line Diagram

Palomar Energy Project

project 27085
contract
dwg. no. SK-E1 – rev. A

SEMPRA E1.DGN/ 6-26-2001 14:43/HRJ