May 15, 2001

La Jolla Energy Development
2882 Walnut St #C
Tustin, CA 92780

Southern California Edison
2244 Walnut Grove Ave
Rosemead, CA 91770

Attn: Mr. Lauren Minor

RE: Electric Interconnect Request for Baldwin Energy No. I

Dear Lauren:

I am formally requesting an application to interconnect new peaking generation to the ISO controlled grid. This new generation will be owned and operated by Stocker Resources, Inc. (SRI) and La Jolla Energy Development. The Baldwin Energy No. 1 facility will consist of two natural gas turbine generators and will interconnect into the La Cienega/Beverly 69kV sub transmission line.

The Interconnection Application is attached. Also, enclosed are the equipment data sheets for the generator and exciter, and a single line diagram depicting the proposed plant electrical system. In addition, we will copy the ISO on this request.

As required a deposit in the amount of $60,000.00 is included.

Please review this application for completeness, and advise if you require any additional information. Due to the urgent need to site this new generation, we are requesting an expedited review and approval of this application. Based on Governor Davis' executive order D-26-01, it is our understanding that we can expect a completed interconnection study within seven days. If you have any questions or need any further information, please call me at (714) 505-0874.

Sincerely,

Steve Wilburn

CC: Steve Rusch – SRI
Ali Amarali – CAISO

EXHIBIT A (CONTINUED)

TABLE 2

TRANSFORMER DATA

UNIT _____

NUMBER OF TRANSFORMERS 2 PHASE 3 HERTZ 60

RATED KVA	H Winding	X Winding	Y Winding
Connection (Delta, Wye Gnd)			
55° C Rise			
65° C Rise	28,000		
RATED VOLTAGE	69,000		13,200
BIL			
AVAILABLE TAPS (Mark Tap Settings)	2@2.5 above and below Or unless the engineer specs otherwise		N/A

TYPE COOLING OA x OA/FA ____ OA/FA/FA ____ OA/FOA ____

FOA ____ W ____ OTHER ____ Specify _____

IMPEDANCE	H-X	H-Y	X-Y
Percent	8-9%		
MVA Base			
Tested Taps			

WINDING RESISTANCE	H	X	Y
Will be determined at test. Ohms			

CURRENT TRANSFORMER RATIOS CT's were not quoted

H _____ X _____ Y _____ N _____

PERCENT EXCITING CURRENT 100% Voltage _____ 110% _____

Supply copy of nameplate and manufacturer's test report when received.

Exiting current will be determined at test.

Model Name: genrou

Description: Solid rotor generator represented by equal mutual inductance rotor modeling

Prerequisites: Generator present in load flow working case

Inputs: Network boundary variables, Field Voltage, and Turbine Power

Output Channels:

Record Level	Name	Description
5	spd	Shaft speed, pu
1	ang	Rotor angle, degrees
1	vt	Terminal voltage, pu
4	pg	Electrical power, MW
6	qg	Reactive power, MVAR
2	efd	Field voltage, pu
3	it	Terminal current, pu

Invocation: genrou [<n>] [<name> <kv>] <id> :

Parameters:

Name		EPCL Variable	Description
8.01 Secs	T'do	tpdo	D-axis transient rotor time constant
0.05 Secs	T"do	tppdo	D-axis subtransient rotor time constant
2.44 Secs	T'qo	tpqo	Q-axis transient rotor time constant
0.05 Secs	T"qo	tppqo	Q-axis subtransient rotor time constant
1.18 kW secs/KVA	H	h	Inertia constant, sec
0	D	d	Damping factor, pu
232%	Ld	ld	D-axis synchronous reactance
212%	Lq	lq	Q-axis synchronous reactance
28.1%	L'd	lpd	D-axis transient reactance
40.1	L'q	lpq	Q-axis transient reactance
21.1%	L"d	lppd	D-axis subtransient reactance
15.6%	Ll	ll	Stator leakage reactance, pu
1.74	Sel.0	sl	Saturation factor at 1 pu flux
----	Sel.2	sl2	Saturation factor at 1.2 pu flux
0.0069 ohms	Ra	ra	Stator resistance, pu
0	Rcomp	rcomp	Compounding resistance voltage control, pu
0	Xcomp	xcomp	Compounding reactance voltage control, pu

Notes:

a) All rotor time constants must be non-zero.

b) All reactances must be specified. L"q is taken to be equal to L"d.

c) D has the dimensions delta P/delta speed.

Model Name: exst4b

Description: IEEE type ST4b excitation system

Prerequisites: Generator model ahead of this model in dynamic models table

Inputs: Compounded generator terminal voltage, generator field current, generator speed

Output Channels:

Record Level	Name	Description
1	if	Generator field current, p.u.

Invocation: exst4b [<n>] [<name> <kv>] <id> :

Parameters:

	Name	EPCL Variable	Description
0.02	Tr	tr	Filter time constant, sec
3.15	Kpr	kpr	Proportional Gain, p.u.
3.15	Kir	kir	Integral Gain, p.u.
0.01	Ta	ta	Time constant, sec
1	Vrmax	vrmax	Maximum control element output, pu
-0.87	Vrmin	vrmin	Minimum control element output, pu
1	Kpm	kpm	Prop. Gain of field voltage regulator, p.u.
0	Kim	kim	Integral Gain of field voltage regulator, p.u.
1	Vmmax	vmmax	Maximum field voltage regulator output, pu
-0.87	Vmmin	vmmin	Minimum field voltage regulator output, pu
0	Kg	kg	Excitation limiter gain, pu
6.5	Kp	kp	Potential source gain, pu
0	Angp	angp	Phase angle of potential source, degrees
0	Ki	ki	Current source gain, pu
0.08	Kc	kc	Exciter regulation factor, pu
0	Xl	xl	Main generator leakage reactance, pu
8	Vbmax	vbmax	Maximum excitation voltage

Notes:

a) This model represents the GE EX2000 bus fed potential source, static compound and Generrex-PPS or -CPS, and SILCOmatic 5 excitation systems, with proportional plus integral (PI) voltage controller.

b) The inner loop field voltage regulator (Kpm, Kim and Kg) are used for modeling of a compound power source static exciter. Any of these values can be zero. To bypass the inner loop field voltage regulator, set Kpm = 1.0, and Kim and Kg tp zero.

c) Setting Ta or Tr to zero will bypass the time constants.

Model Name: pss2a

Descriptions: Dual input Power system stabilizer (IEEE type PSS2A)

Prerequisites: Generator model ahead of this model in dynamic models table

Inputs: Generator shaft speed

Frequency of generator terminal or system bus voltage

Generator electric power or accelerating power

Voltage amplitude of generator terminal bus or system bus

Current amplitude in specified branch

Output Channels:

Record Level	Name	Description
1	vs	Stabilizer output signal, p.u.

Invocation: pss2a [<n>] {<name> <kv>} <id> :

Parameters:

\cName	\cEPCL\p Variable	Description\p
1	j1	Input signal #1 code
---	k1	Input signal #1 remote bus number
3	j2	Input signal #2 code
---	k2	Input signal #2 remote bus number
2	tw1	First washout on signal #1, sec
2	tw2	Second washout on signal #1, sec
2	tw3	First washout on signal #2, sec
0	tw4	Second washout on signal #2, sec
0	t6	Time constant on signal #1, sec
2	t7	Time constant on signal #2, sec
(Tw2/2H)	ks2	Gain on signal #2
1	ks3	Gain on signal #2
1	ks4	Gain on signal #2
0.5	t8	Lead of ramp tracking filter
1	t9	Lag of ramp tracking filter
1	n	Order of ramp tracking filter
5	m	Order of ramp tracking filter
---	ks1	Stabilizer gain
0.25,0.04,0.2,0.3	t1-t4	Lead/lag time constants, sec
0.1	vstmax	Stabilizer output max limit, p.u.
-0.1	vstmin	Stabilizer output min limit, p.u.

SCHEDULE OF TECHNICAL DATA

Item	A
Rating (kVA)	40824
Output (kW)	34700
Poles	2
Volts (V)	13800
Phases	3
Frequency (Hz)	60
Machine Type	Cylindrical rotor brushless AC generator
Enclosure	FV (enclosure by others)
Mounting	Horizontal foot IM1001 (IMB3)
Frame	BTA 75-19 F
Efficiency - 100% F.L.	97.87
Efficiency - 75% F.L.	97.78
Efficiency - 50% F.L.	97.45
Power Factor - 100% F.L.	0.85
Power Factor - 75% F.L.	0.85
Power Factor - 50% F.L.	0.85
Full Load Speed (rev/min)	3600
Full Load Current (A)	1708
Rotor Moment of Inertia J (WR^2-kgm^2)	540

Insulation Class	F
Heater Rating	Single phase 240 Volt supply
Temperature Rise (deg K)	Stator winding rise 105 deg C over 15 deg C air, Rotor winding rise110 deg C over 15 deg C air
Specification	ANSI C50.14
Bearing Number	2
Bearing Type	Journal
Bearing Lubrication	Flood oil
Oil Quantity (l/min./machine)	100
Shaft Extension Type	Integral forged
Terminals - Type	Combined line & neutral terminal box. Stator winding tails to be cable
Weights: Machine (kg)	48500
Silencing	None
Noise mean SPL dB(A)	100 (without inlet & outlet silencers)
Sound Power Level dB(A)	
Graph Numbers:	
Open & Short Circuit Characteristics	To follow
Negative Phase Sequence Withstand	To follow
Short Circuit Decrement	To follow
Capability Diagram	To follow
Efficiency Diagram	To follow
Output / Coolant Temperature	To follow

Generator Electrical Data

Performance Curves	
Output / coolant temperature	To follow
Short circuit decrement	To follow
Efficiency diagram	To follow
Open- and short-circuit characteristics	To follow
Negative phase sequence withstand	To follow
Capability diagram	To follow
Negative Sequence Capability	
Max short time negative sequence $I^2{}_2t$	30
Max continuous I_2 unbalance	15
Reactance and Sequence Resistances	
<u>Direct Axis Reactances</u>:	
Unsaturated synchronous reactance, $X_{d(I)}$	232 %
Saturated transient reactance, $X'_{d(v)}$	25.5 %
Unsaturated transient reactance, $X'_{d(I)}$	28.1 %
Saturated sub-transient reactance, $X''_{d(v)}$	18.4 %
Unsaturated sub-transient reactance, $X''_{d(I)}$	21.1 %
Saturated negative sequence reactance, $X_{2(v)}$	18.0 %
Unsaturated negative sequence reactance, $X_{2(I)}$	20.6 %
Zero sequence reactance, X_0	9.2 %
Potier reactance, X_P	23.9 %
Saturated stator leakage, $X_{sl(v)}$	11.6 %
Unsaturated stator leakage, $X_{sl(I)}$	15.6 %
<u>Quadrature Axis Reactances</u>:	
Saturated synchronous reactance, $X_{q(v)}$	167 %
Unsaturated synchronous reactance, $X_{q(I)}$	212 %
Saturated transient reactance, $X'_{q(v)}$	30.6 %
Unsaturated transient reactance, $X'_{q(I)}$	40.1 %
Saturated sub-transient reactance, $X''_{q(v)}$	22.3 %
Unsaturated sub-transient reactance, $X''_{q(I)}$	25.1 %
<u>Sequence Resistances</u>:	
Positive sequence resistance, R_1	0.0063 p.u at 75 °C
Negative sequence resistance, R_2	0.0337 p.u at 75 °C
Zero sequence resistance, R_0	0.0095 p.u at 75 °C

Generator Electrical Data (continued)

Time Constants at 20 °C

Direct Axis:

Transient O.C time constant, T'_{do}	8.01 seconds
Transient S.C time constant, 3 ph, T'_{d3}	0.70 seconds
Transient S.C time constant, L-L, T'_{d2}	1.39 seconds
Transient S.C time constant, L-N, T'_{d1}	1.62 seconds
Sub-transient O.C time constant, T''_{do}	0.05 seconds
Subtransient S.C time constant, 3 ph, T''_{d3}	0.04 seconds
Subtransient S.C time constant, L-L, T''_{d2}	0.04 seconds
Subtransient S.C time constant, L-N, T''_{d1}	0.04 seconds

Quadrature Axis:

Transient O.C time constant, T'_{qo}	2.44 seconds
Transient S.C time constant, 3 ph, T'_{q3}	0.35 seconds
Transient S.C time constant, L-L, T'_{q2}	0.51 seconds
Transient S.C time constant, L-N, T'_{q1}	0.59 seconds
Subtransient O.C time constant, T''_{qo}	0.05 seconds
Subtransient S.C time constant, 3 ph, T''_{q3}	0.04 seconds
Subtransient S.C time constant, L-L, T''_{q2}	0.04 seconds
Subtransient S.C time constant, L-N, T''_{q1}	0.04 seconds

Miscellaneous:

D.C Armature time constant, 3 ph, T_{a3}	0.32 seconds
D.C Armature time constant, L-L, T_{a2}	0.32 seconds
D.C Armature time constant, L-N, T_{a1}	0.17 seconds

Short Circuit Ratio

Short circuit ratio	0.48
Saturation factor	1.74

Inertia

Moment of inertia, WR^2	680 $kg.m^2$
Inertia constant, H	1.18 kWsecs/KVA

Excitation

No load (cold):

Excitation current at no load, rated voltage	331 amps
Excitation voltage at no load, rated voltage	31 volts
Exciter field current at no load	2.5 amps
Exciter field voltage at no load	13 volts

Generator Electrical Data (continued)

Rated load (hot):

Excitation current at rated load and P.F	979 amps
Excitation voltage at rated load and P.F	130 volts
Exciter field current at rated load and P.F	6.5 amps
Exciter field voltage at rated load and P.F	48 volts

Short circuit clearance of 2.5 p.u rated line amps (hot):

Excitation current on clearance	1731 amps
Excitation voltage on clearance	229 volts
Exciter field current on clearance	11.0 amps
Exciter field voltage on clearance	82 volts

Inherent Voltage Regulation

F.L to N.L rated pf, constant excitation	36 %
F.L to N.L unity pf, constant excitation	27 %
F.L to N.L steady state under full AVR control	± 0.5 %

Efficiency and Losses

These losses below are calculated values. The total loss and the resulting efficiencies are subject to a tolerance in accordance with IEC 34-1.

MW output	34.700	34.700
Power factor	0.850	Unity
Friction and windage loss(kW)	265	265
Stator core iron loss(kW)	95	95
Stator copper loss at 95°C(kW)	81	58
Stray load loss at 95°C(kW)	191	138
Rotor copper loss at 95°C(kW)	116	57
Exciter loss(kW)	8	4
Total loss(kW)	758	618

Efficiencies:

% load	100	75	50	25
0.850 power factor	97.88 %	97.76 %	97.32 %	95.54 %
Unity power factor	98.25 %	98.07 %	97.55 %	95.70 %

Generator Electrical Data (continued)

Capacitance and Surge Impedance	
Capacitance per phase of stator winding to earth	0.10 microfarad
Surge impedance per phase	276 ohms
Resistances at 20°C	
Stator resistance per phase	0.0069 ohms
Rotor resistance	0.094 ohms
Exciter armature resistance per phase	0.00130 ohms
Exciter field resistance	5.39 ohms
Pilot exciter resistance	0.088 ohms
Exciter	
Exciter frame size	BX 10.20
Voltage rating	143 volts D.C
Current rating	1077 amps D.C
Output	154 kW
Frequency	180 Hz
AC voltage at full load	175 volts RMS
AC current at full load	734 amps RMS
Power factor	0.57
Number of phases	3
Response ratio	2.8 $secs^{-1}$
Rotating Rectifier	
Number of diodes	12
Arrangement	3 ph full wave bridge; 6 arms; 2 fused diodes in parallel per arm
Diode repetitive peak reverse voltage	2000 volts
Diode rated mean forward current	330 amps
Diode mean forward current at rated load	163 amps
Diode reverse voltage at rated load	130 volts
Fuse rating	450 amps

Generator Electrical Data (continued)

Permanent Magnet Pilot Exciter	
Pilot exciter frame size	MXI 44.07
Open circuit volts	270 volts
Full load voltage	263 volts
Full load current	3.6 amps
Power factor	0.34
Rated frequency	480 Hz
Number of phases	1
Instantaneous Initial Fault Currents	
3 ph symmetrical fault from no load	9300 amps RMS
L-L symmetrical fault from no load	8150 amps RMS
L-N symmetrical fault from no load	11250 amps RMS
Miscellaneous Generator Data	
X/R ratio	103
Synchronizing coefficient	50 MW/radian
No load synchronizing power	19 MW/radian
Full load synchronizing power	40 MW/radian
Damping torque coefficient	13
Magnetic centering force for an axial displacement of 20 mm	801 kg
Motoring power	374 kW
Anti-condensation space heaters approximate power rating	4 kW
Generator air outlet temperature	51 °C

Default Data for Generator Interconnection Studies

For transformer fed excitation systems use EXST4B

For brushless excitation systems use REXS

Genrou		Exst4b		Rexs		Pss2a			Gast	
T'do	4.8	Tr	0.02	Tr	0	j1		1	R	0.04
T"do	0.033	Kpr	3.15	Kvp	2800	k1	*		T1	0.4
T'qo	0.41	Kir	3.15	Kvi	0	j2		3	T2	0.5
T"qo	0.07	Ta	0.01	Vimax	0.1	k2	*		T3	3
Ld	2.14	Vrmax	1	Ta	0.01	Tw1		2	Lmax	1
Lq	2.04	Vrmin	-0.87	Tb1	0	Tw2		2	Kt	3
L'd	0.24	Kpm	1	Tc1	0	Tw3		2	Vmax	1.5
L'q	0.5	Kim	0	Tb2	0	Tw4		0	Vmin	0
L"d	0.23	Vmmax	1	Tc2	0	T6		0	Dturb	
L"q	0.23	Vmmin	-0.87	Vrmax	47	T7		2	Fidle	0.2
Ll	0.19	Kg	0	Vrmin	-20	Ks2	***		Rmax	0.01
Ra		Kp	6.5	Kf	0.05	Ks3		1	Linc	0.05
s(1)	0.1	Angp	0	Tf	1	Ks4		1	Tltr	5
s(1.2)	0.4	Ki	0	Tf1	0	T8		0.5	Ltrat	0.005
H 2	**	Kc	0.08	Tf2	0	T9		1	a	0
D	0	Xl	0	Fbf	1	n		1	b	1
Rcomp	0	Vbmax	8	Kip	1	m		5	db1	0
Xcomp	0			Kii	0	T1		0.25	eps	0
				Tp	0	T2		0.04	db2	0
				Vfmax	47	T3		0.2	gv1	0
				Vfmin	-20	T4		0.03	..etc..	0
				Kh	0	Vstmax		0.1		
				Ke	1	Vstmin		-0.1		
				Te	1.2					
				Kc	0.05					
				Kd	2					
				e1	3					
				S(e1)	0.0001					
				e2	4					
				S(e2)	0.001					
				Rcomp	0					
				Xcomp	0					
				Nvphz	0					
				Kvphz	0					
				Flimf	0					
				Xcomp	0					
				Vcmax	0					

Legend:			
*	Bus No		
**	Inertia	Steam	4.5
		F6/F7	6.5
		Aero	1.2
		Hydro	4
***	(Tw2)/2H		

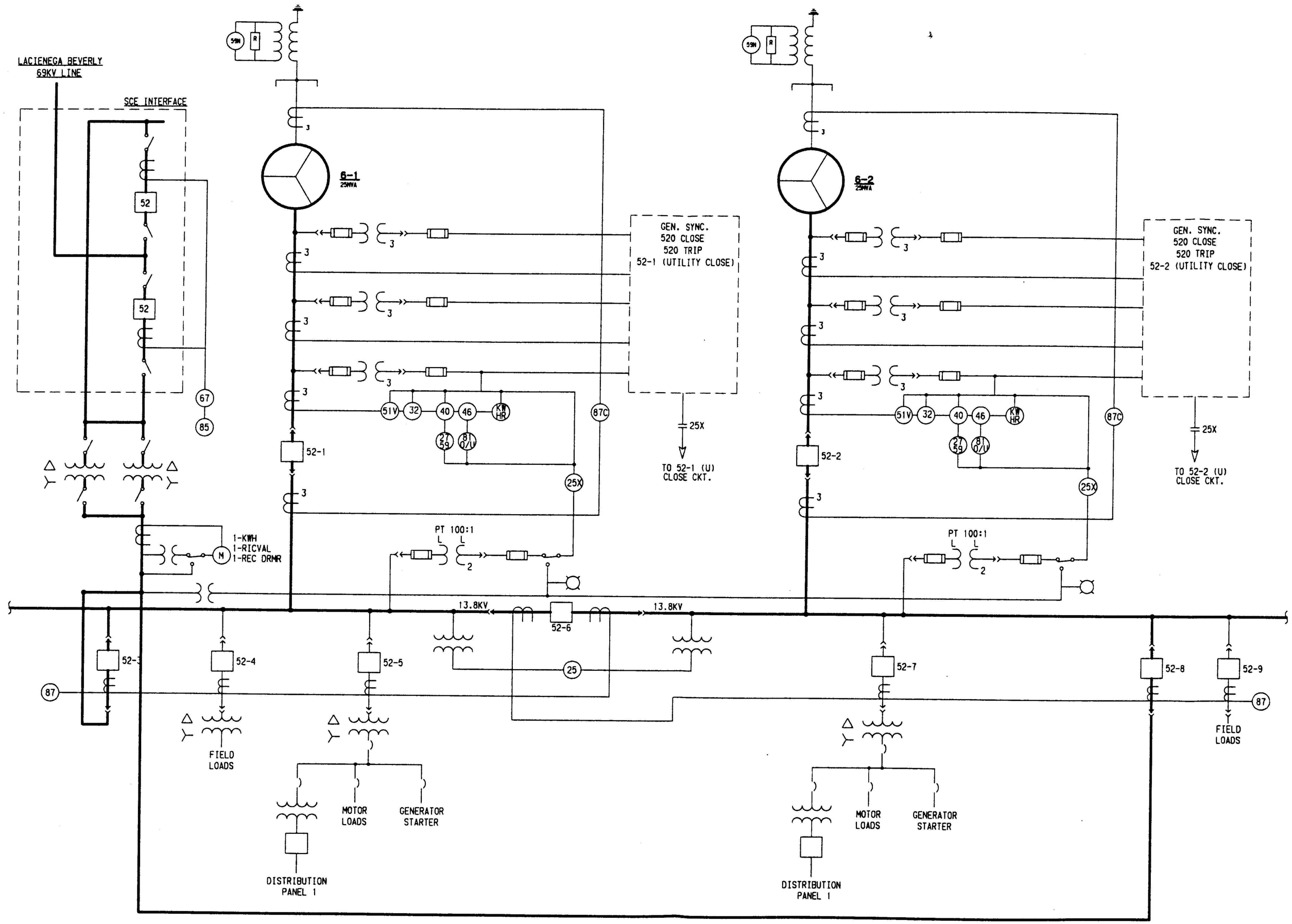

* PRELIMINARY DESIGN

SINGLE LINE DIAGRAM
50MW PLANT

ELC ELECTRIC

STOCKER RESOURCES

SHT. 1 OF 1
SCALE: NONE

REFERENCE DRAWINGS	REFERENCE DRAWINGS	NO.	REVISIONS	P.E.	CK'D	APPROVED	DATE	MADE	NO.	REVISIONS	P.E.	CK'D	APPROVED	DATE	MADE