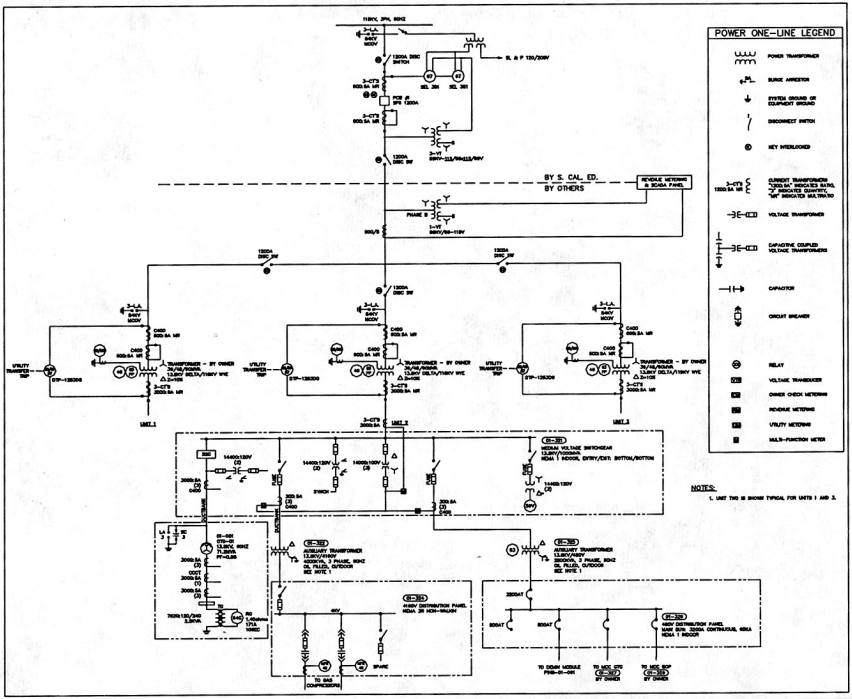

NOTES:

1. UNIT TWO IS SHOWN TYPICAL FOR UNITS 1 AND 3.

R.G. Vanderwell Engineers, Inc.

GEMMA POWER SYSTEMS
WILDFLOWER ENERGY
PALM SPRINGS EAST

ELECTRICAL
115 KV ONE-LINE
DIAGRAM

E-100D