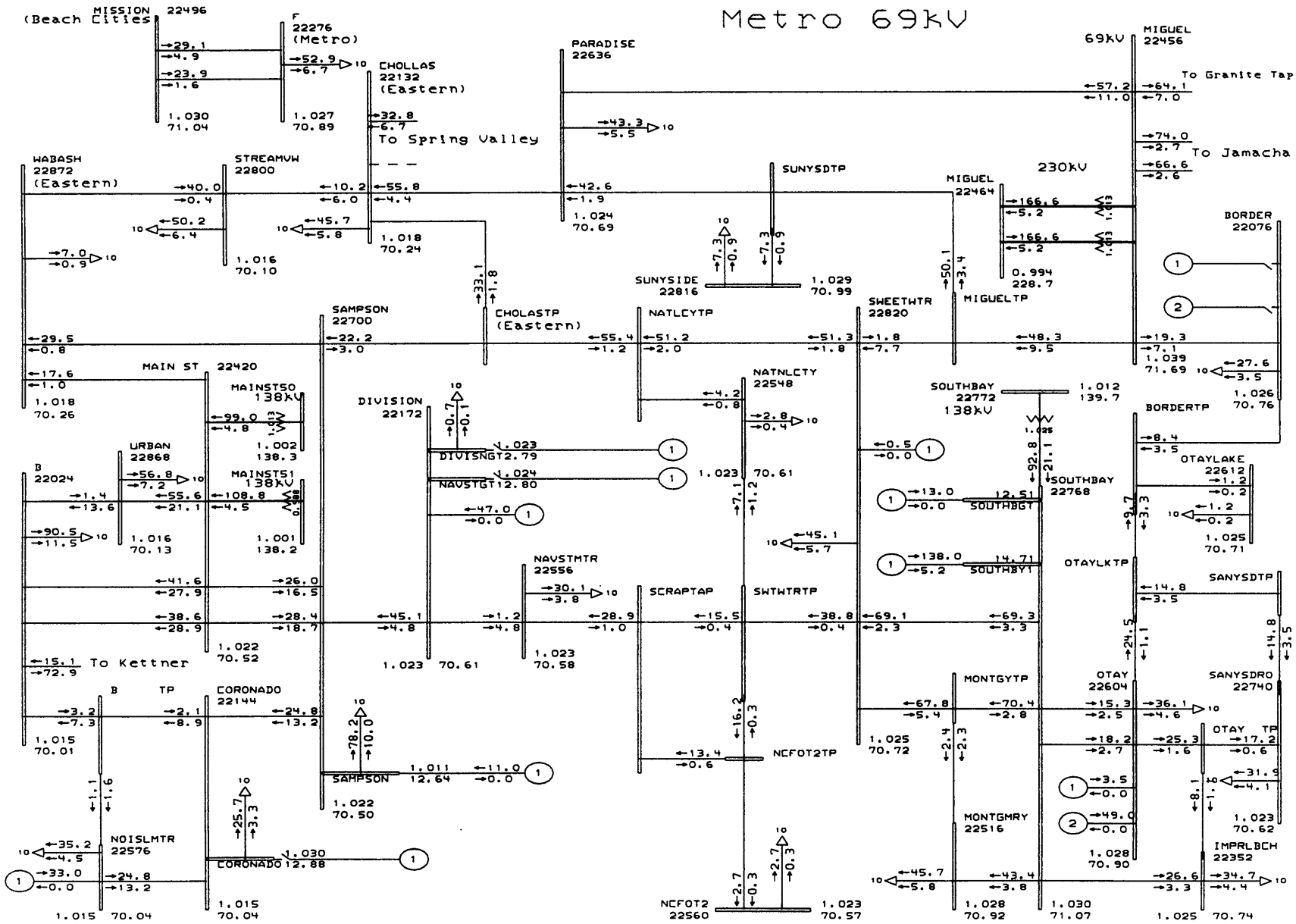

General Electric International, Inc. PSLF Program MW/MVAR Tue Feb 20 08:45:50 2001

GENERAL ELECTRIC COMPANY

Otay=49; Border= 0MW; with Max gen at South Bay
SDG&E Load & Losses = 4256 MW, Imp. = -2650 MW, CFE Imp = 0 MW
Base Case, ALIS, no area peaking, EOR = 4323 MW, SCIT= 11497 MW

Originated from WSCC 00hs3f

N-0 Base Case

mt69nt.drw
01base_max_sy.sav
Rating = 1

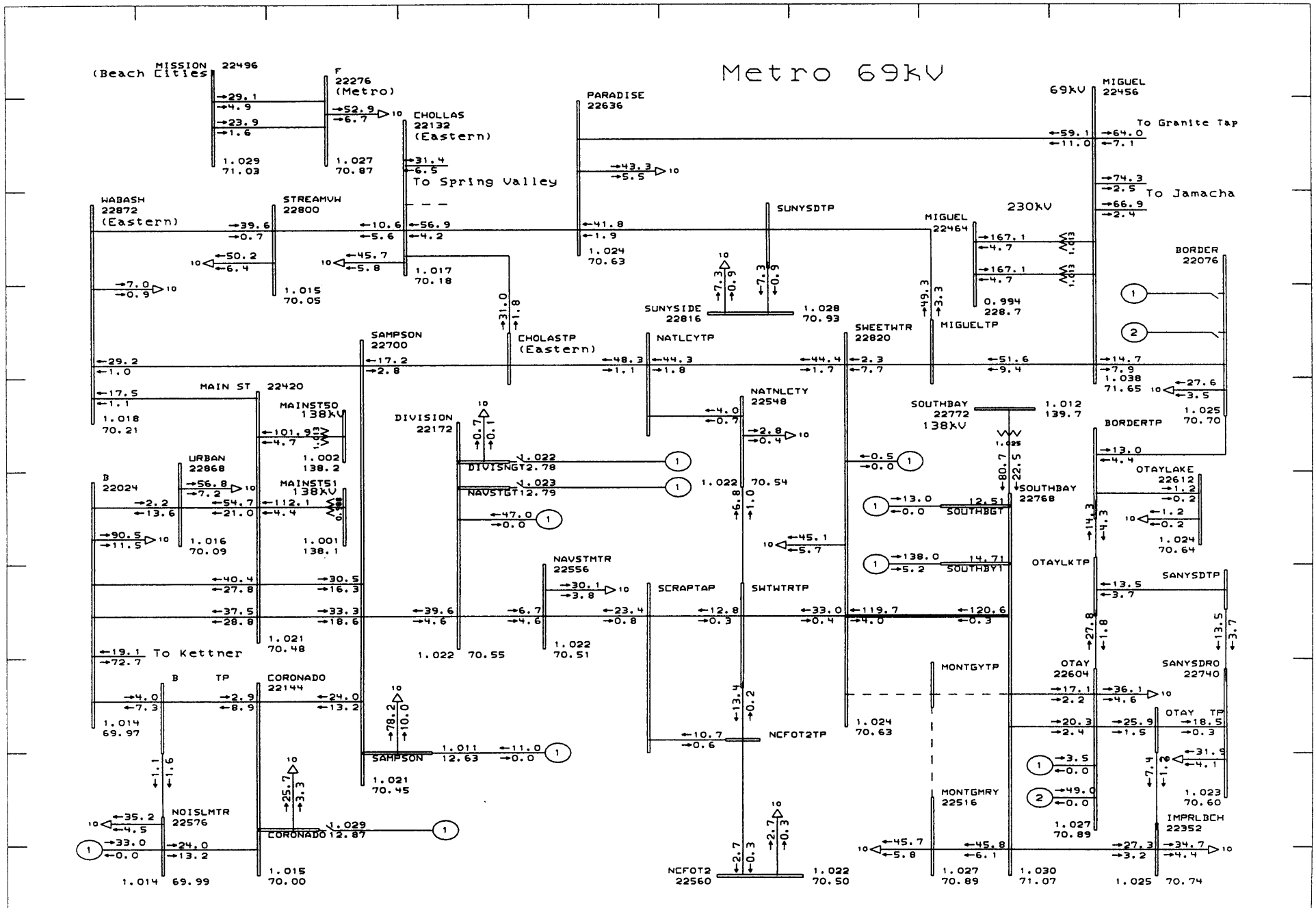

General Electric International, Inc. PSLF Program MW/MVAR Thu Feb 15 20:12:01 2001

GENERAL ELECTRIC COMPANY

Otay=49; Border= OMW; with Max gen at South Bay
SDG&E Load & Losses = 4256 MW, Imp. = -2650 MW, CFE Imp = 0 MW
Base Case, ALIS, no area peaking, EOR = 4323 MW, SCIT= 11497 MW

Originated from WSCC 00hs3f
N-1 Sweetwater-South Bay-Montgomery 69kV

mt69nt.drw
01base_max_sy.sav
Rating = 1

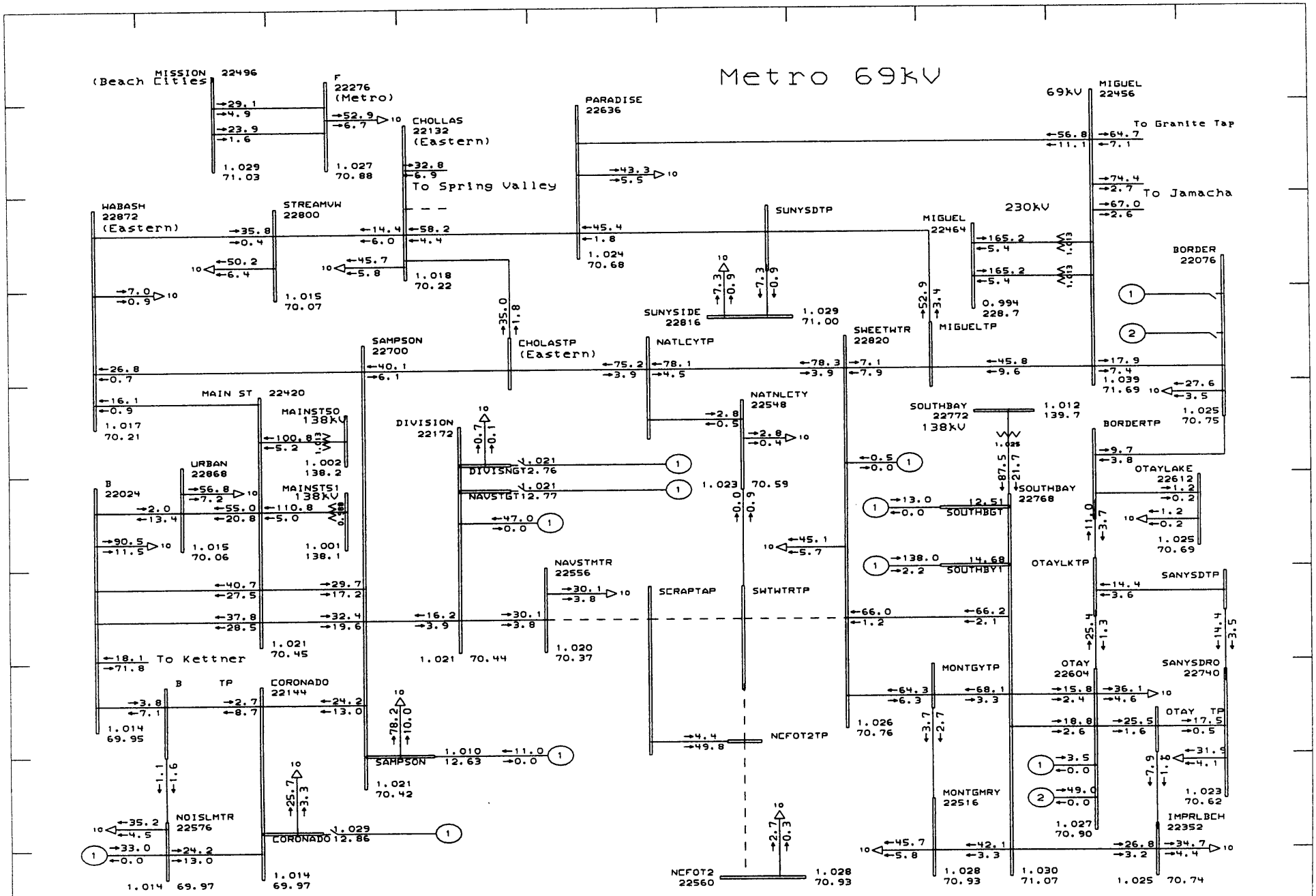

General Electric International, Inc. PSLF Program MW/MVAR Thu Feb 15 20:13:31 2001

GENERAL ELECTRIC COMPANY

Otay=49; Border= 0MW; with Max gen at South Bay
SDG&E Load & Losses = 4256 MW, Imp. = -2650 MW, CFE Imp = 0 MW
Base Case, ALIS, no area peaking, EOR = 4323 MW, SCIT= 11497 MW

Originated from WSCC 00hs3f
N-1 Sweetwater-National City-FOT-Naval Station 69kV

mt69nt.drw
01base_max_sy.sav
Rating = 1

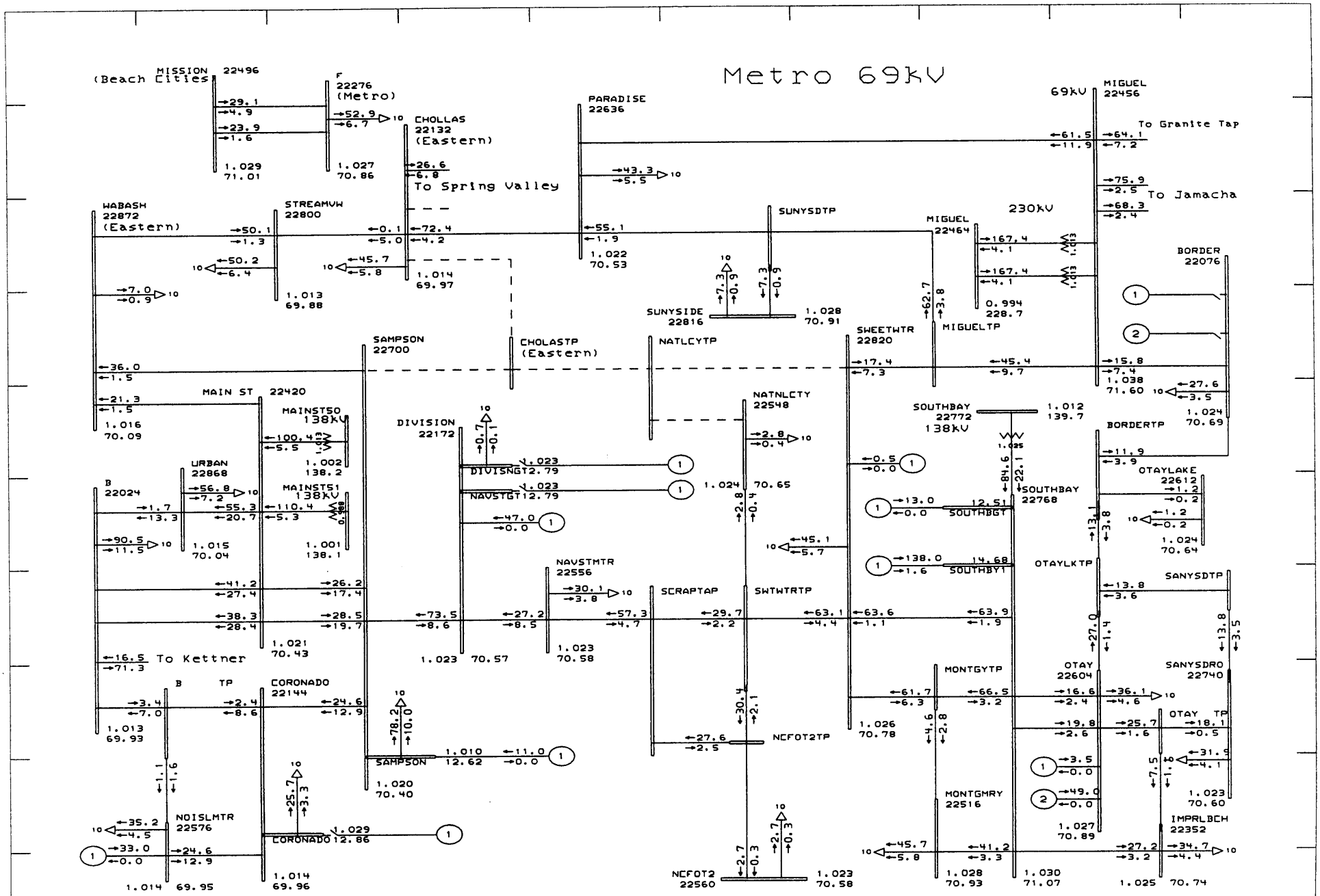

General Electric International, Inc. PSLF Program MW/MVAR Thu Feb 15 20:16:24 2001

GENERAL ELECTRIC COMPANY

Otay=49; Border= 0MW; with Max gen at South Bay DIGT= 0, NSGT= 0
SDG&E Load & Losses = 4256 MW, Imp. = -2650 MW, CFE Imp = 0 MW
Base Case, ALIS, no area peaking, EOR = 4323 MW, SCIT= 11497 MW

Originated from WSCC 00hs3f
N-1 Sweetwater-National City-Chollas-Sampson 69kV

mt69nt.drw
01base_max_sy.sav
Rating = 1

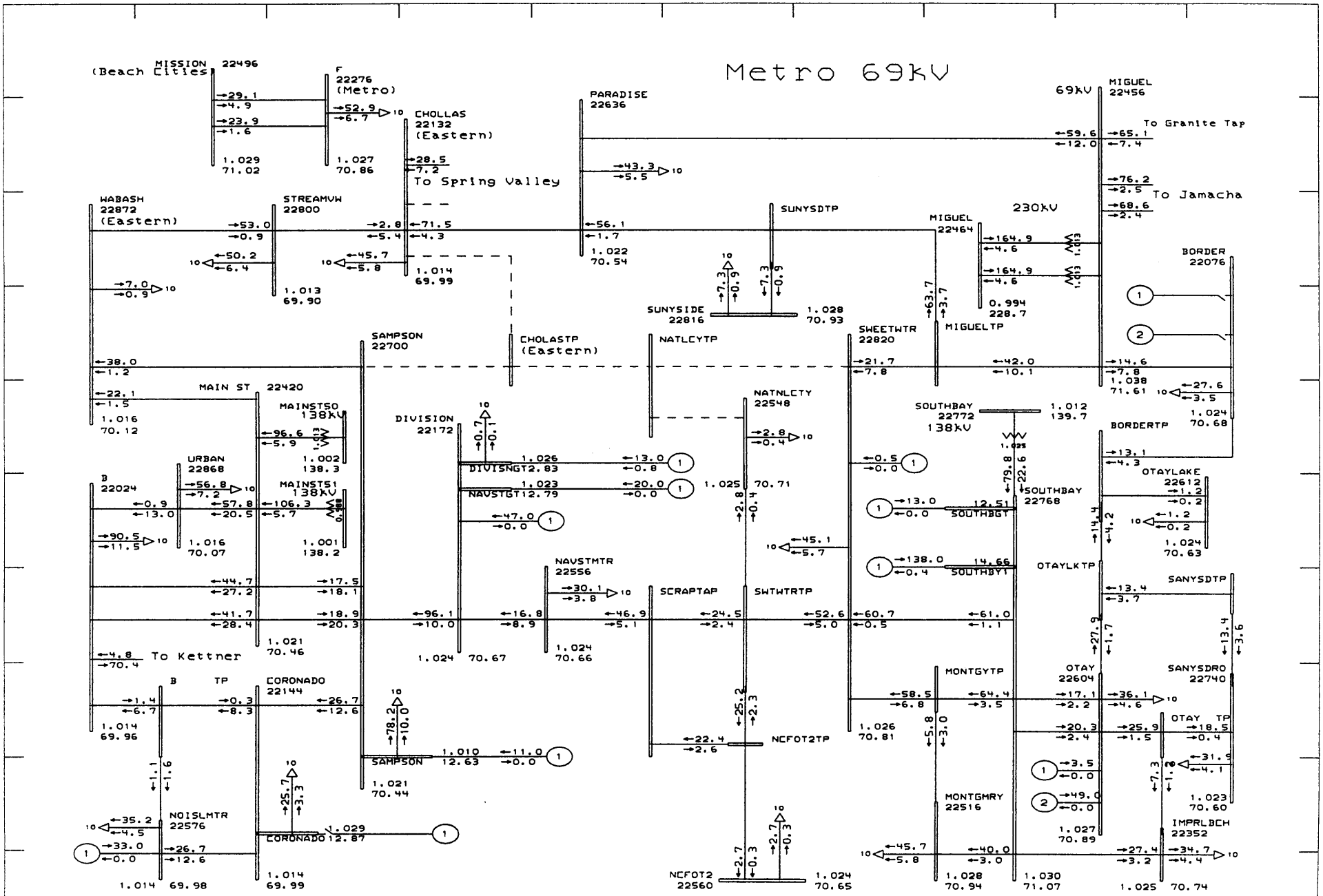

General Electric International, Inc. PSLF Program MW/MVAR Thu Feb 15 20:08:22 2001

GENERAL ELECTRIC COMPANY

Otay=49; Border= 0MW; with Max gen at South Bay DIGT=13, NSGT=20
SDG&E Load & Losses = 4256 MW, Imp. = -2650 MW, CFE Imp = 0 MW
Base Case, ALIS, no area peaking, EOR = 4323 MW, SCIT= 11497 MW

Originated from WSCC 00hs3f
N-1 Sweetwater-National City-Chollas-Sampson 69kV

mt69nt.drw
0itest_max_sy.sav
Rating = 1

Appendix E-2

Power Flow for Post project Condition

Total South Bay Generation: 690 MW
Otay RFB unit = 49MW
Border RFB 2 units = 98MW
Mission RFB unit = 49MW
Escondido RFB 2units = 98MW
El Cajon RFB unit = 49MW

1) N-0 Base Case
2) N-1 Sweetwater-South Bay 69kV
3) N-1 Sweetwater-South Bay-Montgomery 69kV
4) N-1 Sweetwater-National City-FOT-Naval Station 69kV
5) N-1 Sweetwater-National City-Chollas-Sampson 69Kv
   (With DIGT= 0; NSGT= 0)
6) N-1 Sweetwater-National City-Chollas-Sampson 69kV
   (With DIGT= 13; NSGT= 20)
7) N-1 Border-Miguel 69kV
8) N-1 sweetwater-Montgomery 69kV
9) N-1 Sampson-Division 69kV
   (with DIGT= 13; NSGT= 20)
10) N-1 Pardise-Miguel 69kV

APPENDIX F

Sensitivity Study for RFB Dispatch

Total South Bay Generation: 690 MW
Mission RFB unit = 49MW
Escondido RFB 2units = 98MW
El Cajon RFB unit = 49MW

1) N-1 Sweetwater-South Bay 69kV
   (Otay unit= 0, Boder= 0)
2) N-1 Sweetwater-South Bay 69kV
   (Otay unit= 49, Boder= 0)
3) N-1 Sweetwater-South Bay 69kV
   (Otay unit= 49, Boder= 49)
4) N-1 Sweetwater-South Bay 69kV
   (Otay unit= 49, Boder= 98)

APPENDIX G

Sensitivity Study for South Bay Dispatch

Maximum generation at 69kV and reduce 138kV generation

Reduce 69kV generation and maximum 69kV generation

Appendix G-1

South Bay Generation Dispatch Sensitivity

Maximum generation at 138kV and reduce 69kV generation

South Bay 69kV Generation (unit 1& SYGT): 158 MW
South Bay 138kV generation (unit2, 3, 4): 118 MW
Otay RFB unit = 49MW
Border RFB 2 units = 98MW
Mission RFB unit = 49MW
Escondido RFB 2units = 98MW
El Cajon RFB unit = 49MW

1) N-0 Base Case
2) N-1 Sweetwater-South Bay 69kV
3) N-1 Sweetwater-South Bay-Montgomery 69kV
4) N-1 Sweetwater-National City-FOT-Naval Station 69kV
5) N-1 Sweetwater-National City-Chollas-Sampson 69Kv
   (With DIGT= 0; NSGT= 0)
6) N-1 Sweetwater-National City-Chollas-Sampson 69kV
   (With DIGT= 13; NSGT= 20)

Appendix G-2

South Bay Generation Dispatch Sensitivity

Maximum generation at 69 kV and reduce 138kV generation

South Bay 69kV Generation (unit 1& SYGT): 58 MW
South Bay 138kV generation (unit2, 3, 4): 532 MW
Otay RFB unit = 49MW
Border RFB 2 units = 98MW
Mission RFB unit = 49MW
Escondido RFB 2units = 98MW
El Cajon RFB unit = 49MW

1) N-0 Base Case
2) N-1 Sweetwater-South Bay 69kV
3) N-1 Sweetwater-South Bay-Montgomery 69kV
4) N-1 Sweetwater-National City-FOT-Naval Station 69kV
5) N-1 Sweetwater-National City-Chollas-Sampson 69Kv
   (With DIGT= 0; NSGT= 0)
6) N-1 Sweetwater-National City-Chollas-Sampson 69kV
   (With DIGT= 13; NSGT= 20)

Appendix E-2

Power Flow for Post project Condition

Total South Bay Generation: 690 MW
Otay RFB unit = 49MW
Border RFB 2 units = 98MW
Mission RFB unit = 49MW
Escondido RFB 2units = 98MW
El Cajon RFB unit = 49MW

1) N-0 Base Case
2) N-1 Sweetwater-South Bay 69kV
3) N-1 Sweetwater-South Bay-Montgomery 69kV
4) N-1 Sweetwater-National City-FOT-Naval Station 69kV
5) N-1 Sweetwater-National City-Chollas-Sampson 69Kv
   (With DIGT= 0; NSGT= 0)
6) N-1 Sweetwater-National City-Chollas-Sampson 69kV
   (With DIGT= 13; NSGT= 20)
7) N-1 Border-Miguel 69kV
8) N-1 sweetwater-Montgomery 69kV
9) N-1 Sampson-Division 69kV
   (with DIGT= 13; NSGT= 20)
10) N-1 Pardise-Miguel 69kV

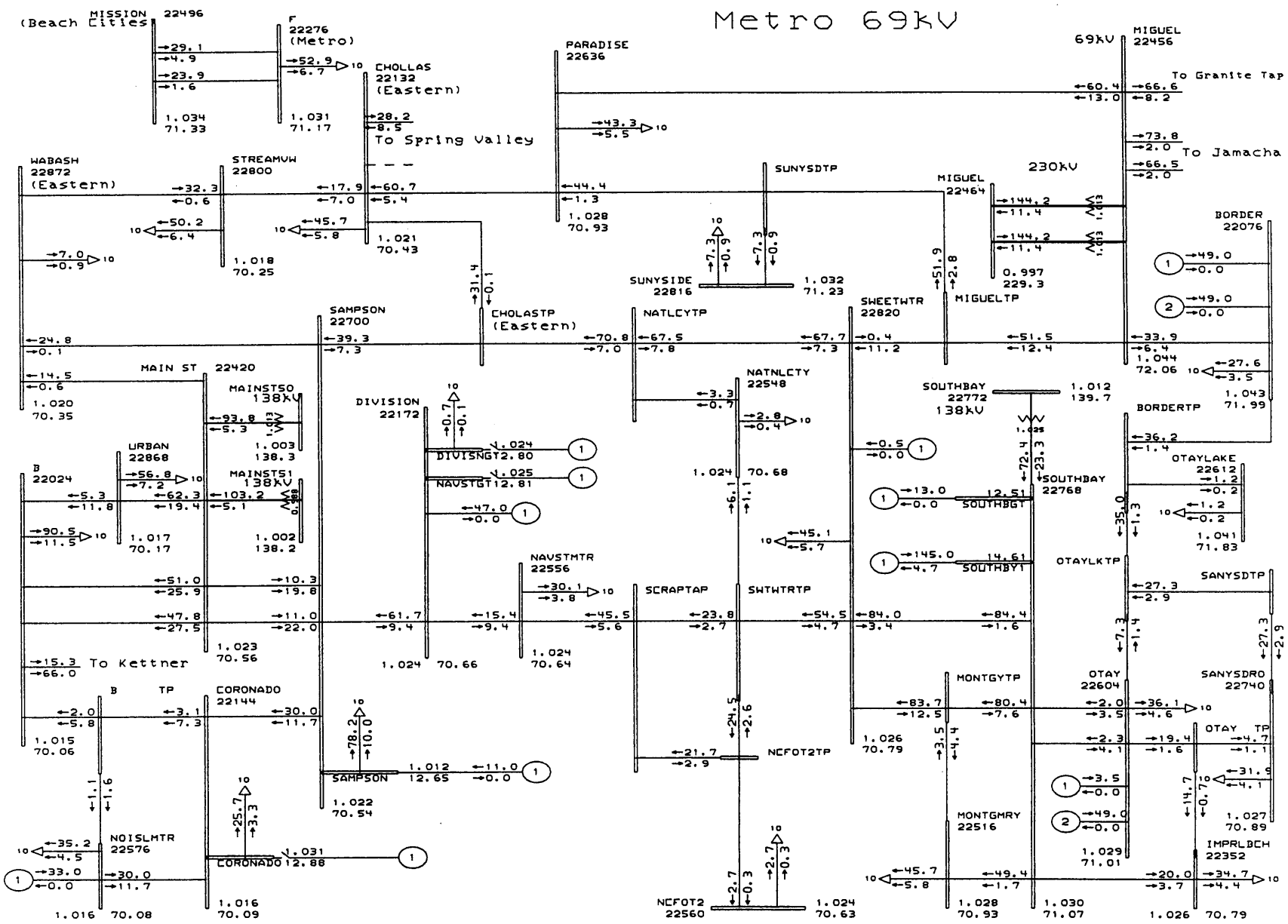

General Electric International, Inc. PSLF Program MW/MVAR Fri Feb 09 17:02:03 2001

GENERAL ELECTRIC COMPANY

2001 Heavy Summer Base Case, Max. gen at South Bay
SDG&E Load & Losses = 4256 MW, Imp. = -2650 MW, CFE Imp = 0 MW
Base Case, ALIS, no area peaking, EOR = 4323 MW, SCIT= 11497 MW

Originated from WSCC 00hs3f

N-0 Base Case

mt69nt.drw
C:\WorkFiles\cb2000\workfile\G
Rating = 1

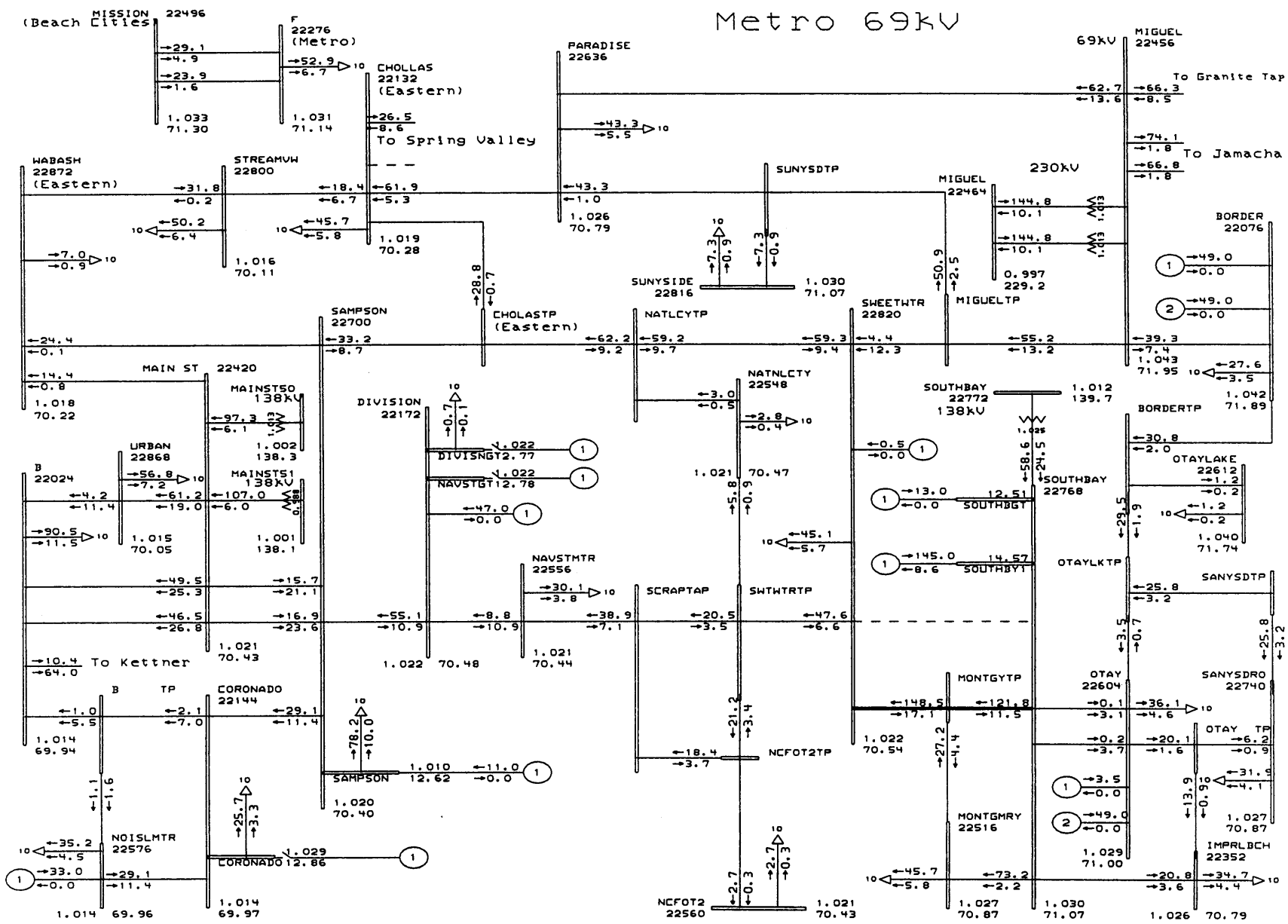

General Electric International, Inc. PSLF Program MW/MVAR Fri Feb 09 17:35:41 2001

GENERAL ELECTRIC COMPANY

2001 Heavy Summer Base Case, Max. gen at South Bay
SDG&E Load & Losses = 4256 MW, Imp. = -2650 MW, CFE Imp = 0 MW
Base Case, ALIS, no area peaking, EOR = 4323 MW, SCIT= 11497 MW

Originated from WSCC 00hs3f
N-1 South Bay-Sweetwater 69kV

mt69nt.drw
C:\WorkFiles\cb2000\workfile\G
Rating = 1

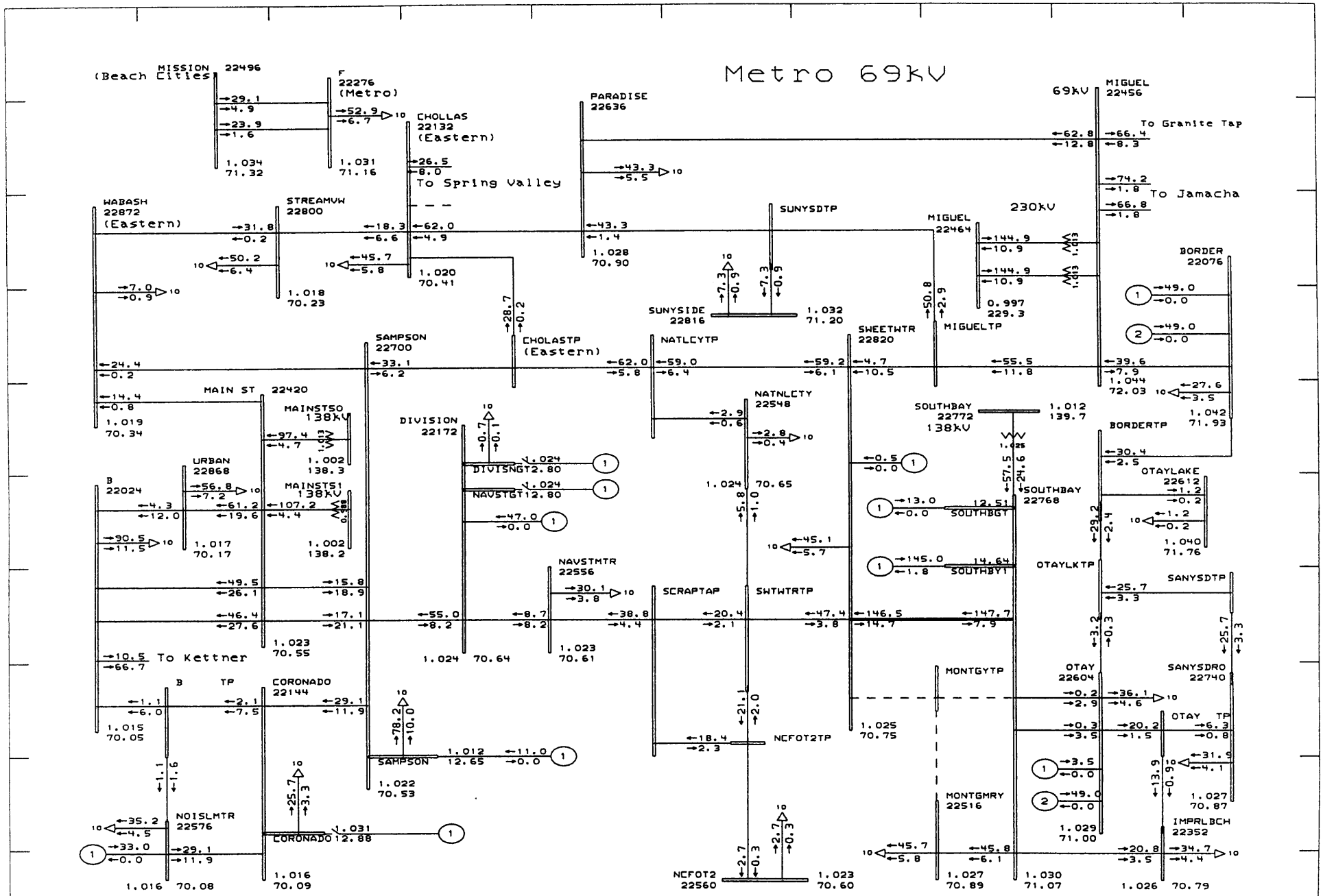

General Electric International, Inc. PSLF Program MW/MVAR Fri Feb 09 17:32:40 2001

GENERAL ELECTRIC COMPANY

2001 Heavy Summer Base Case, Max. gen at South Bay
SDG&E Load & Losses = 4256 MW, Imp. = -2650 MW, CFE Imp = 0 MW
Base Case, ALIS, no area peaking, EOR = 4323 MW, SCIT= 11497 MW

Originated from WSCC 00hs3f
N-1 South Bay-Sweetwater-Mongtgomery 69kV

mt69nt.drw
C:\WorkFiles\cb2000\workfile\G
Rating = 1

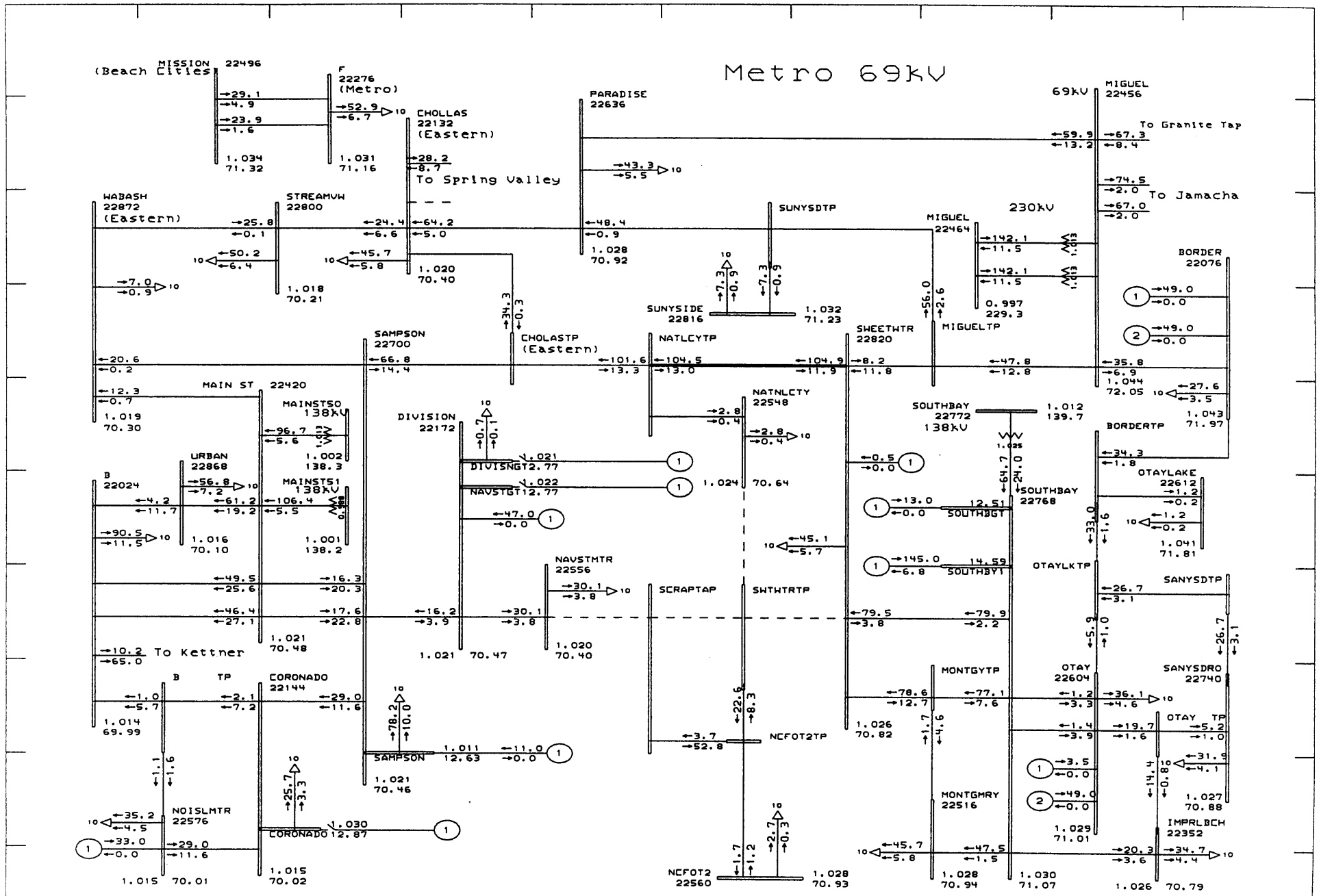

General Electric International, Inc. PSLF Program MW/MVAR Fri Feb 09 18:13:47 2001

GENERAL ELECTRIC COMPANY

2001 Heavy Summer Base Case, Max. gen at South Bay
SDG&E Load & Losses = 4256 MW, Imp. = -2650 MW, CFE Imp = 0 MW
Base Case, ALIS, no area peaking, EOR = 4323 MW, SCIT= 11497 MW

Originated from WSCC 00hs3f
N-1 Sweetwater-National City-FOT-Naval Station 69kV

mt69nt.drw
01gen_dg3_max_sy.sav
Rating = 1

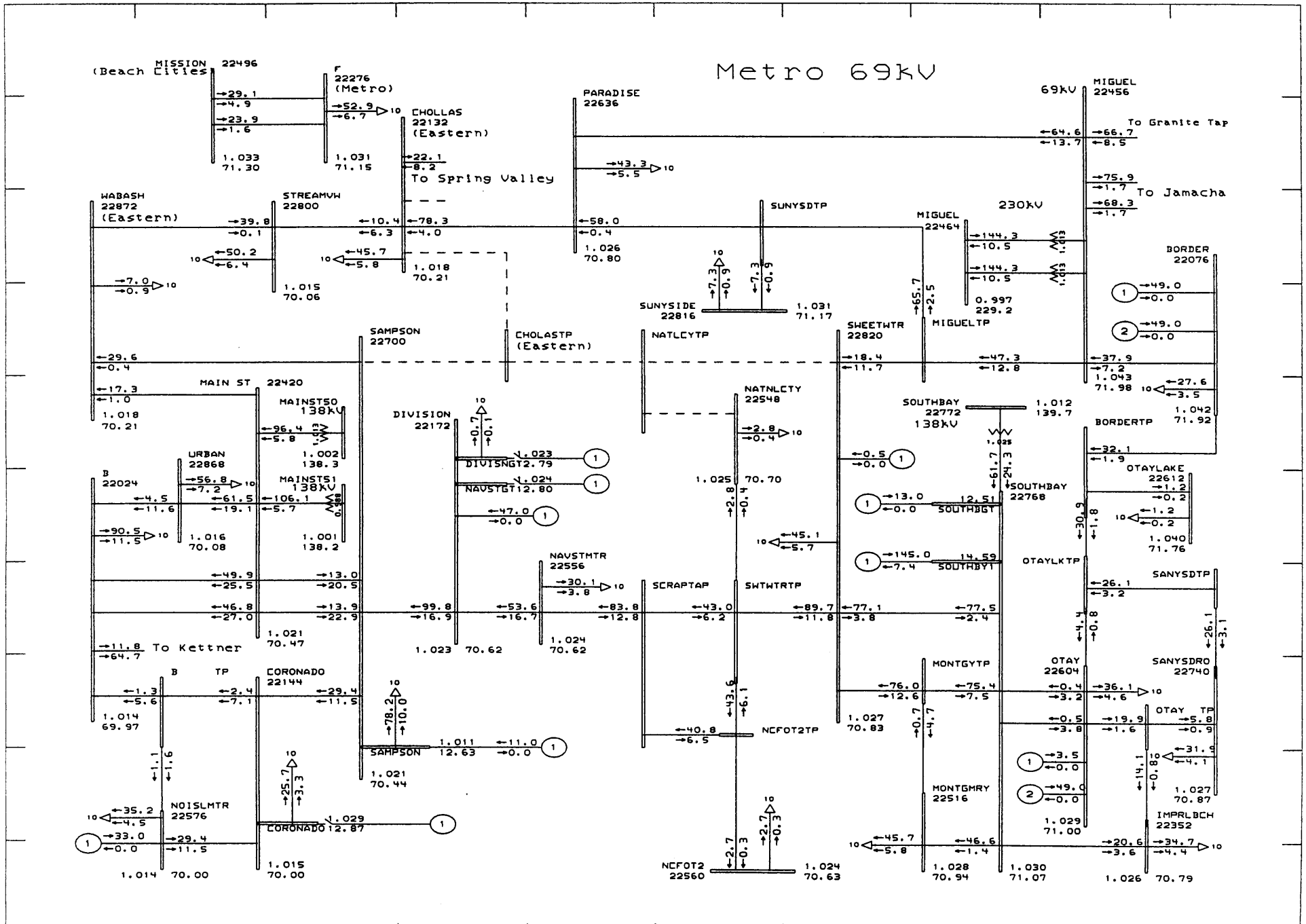

General Electric International, Inc. PSLF Program MW/MVAR Fri Feb 09 17:56:39 2001

GENERAL ELECTRIC COMPANY

2001 Heavy Summer Base Case, Max. gen at South Bay
SDG&E Load & Losses = 4256 MW, Imp. = -2650 MW, CFE Imp = 0 MW
Base Case, ALIS, no area peaking, EOR = 4323 MW, SCIT= 11497 MW

Originated from WSCC 00hs3f
N-1 Sweetwater-National City-Chollas-Sampson (w/o DIGT & NSGT)

mt69nt.drw
01gen_dg3_max_sy.sav
Rating = 1

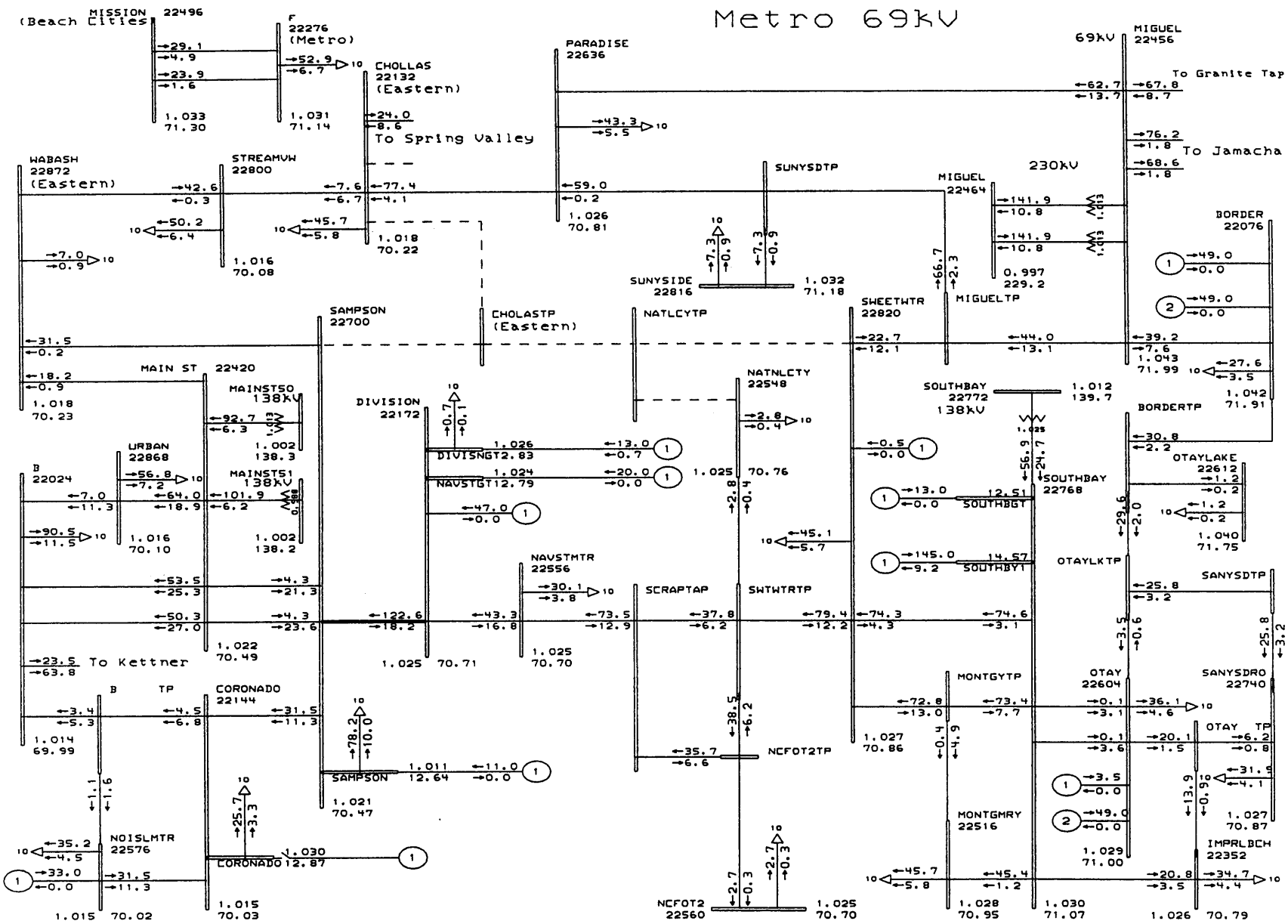

General Electric International, Inc. PSLF Program MW/MVAR Fri Feb 09 18:06:39 2001

GENERAL ELECTRIC COMPANY

2001 Heavy Summer Base Case, Max. gen at South Bay
SDG&E Load & Losses = 4256 MW, Imp. = -2650 MW, CFE Imp = 0 MW
Base Case, ALIS, no area peaking, EOR = 4323 MW, SCIT= 11497 MW

Originated from WSCC 00hs3f
N-1 Sweetwater-National City-Chollas-Sampson (w/ DIGT & NSGT on)

mt69nt.drw
01gen_dg3_max_sy.sav
Rating = 1

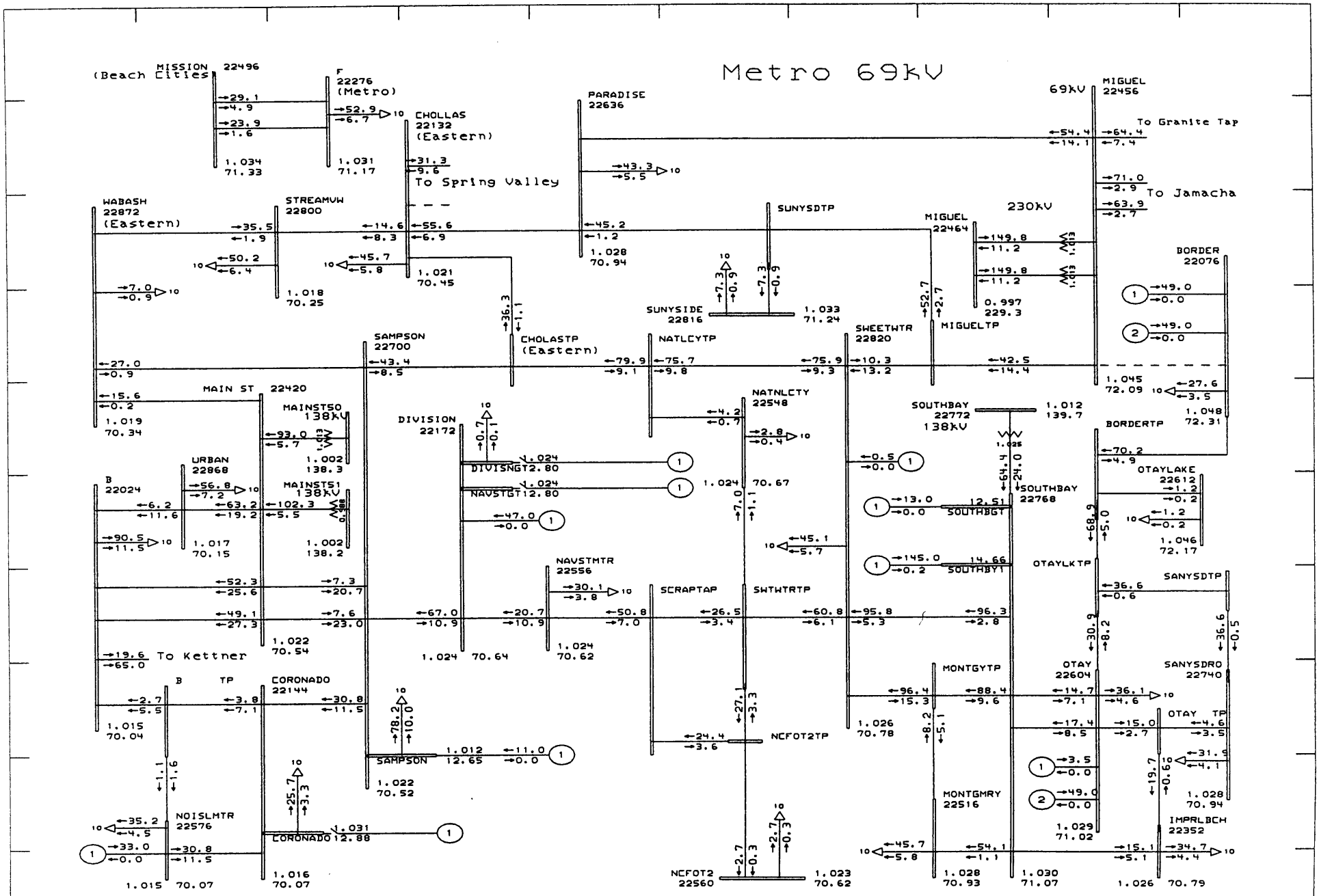

General Electric International, Inc. PSLF Program MW/MVAR Fri Feb 09 18:25:37 2001

GENERAL ELECTRIC COMPANY

2001 Heavy Summer Base Case, Max. gen at South Bay
SDG&E Load & Losses = 4256 MW, Imp. = -2650 MW, CFE Imp = 0 MW
Base Case, ALIS, no area peaking, EOR = 4323 MW, SCIT= 11497 MW

Originated from WSCC 00hs3f
N-1 Border-Miguel 69kV

mt69nt.drw
01gen_dg3_max_sy.sav
Rating = 1

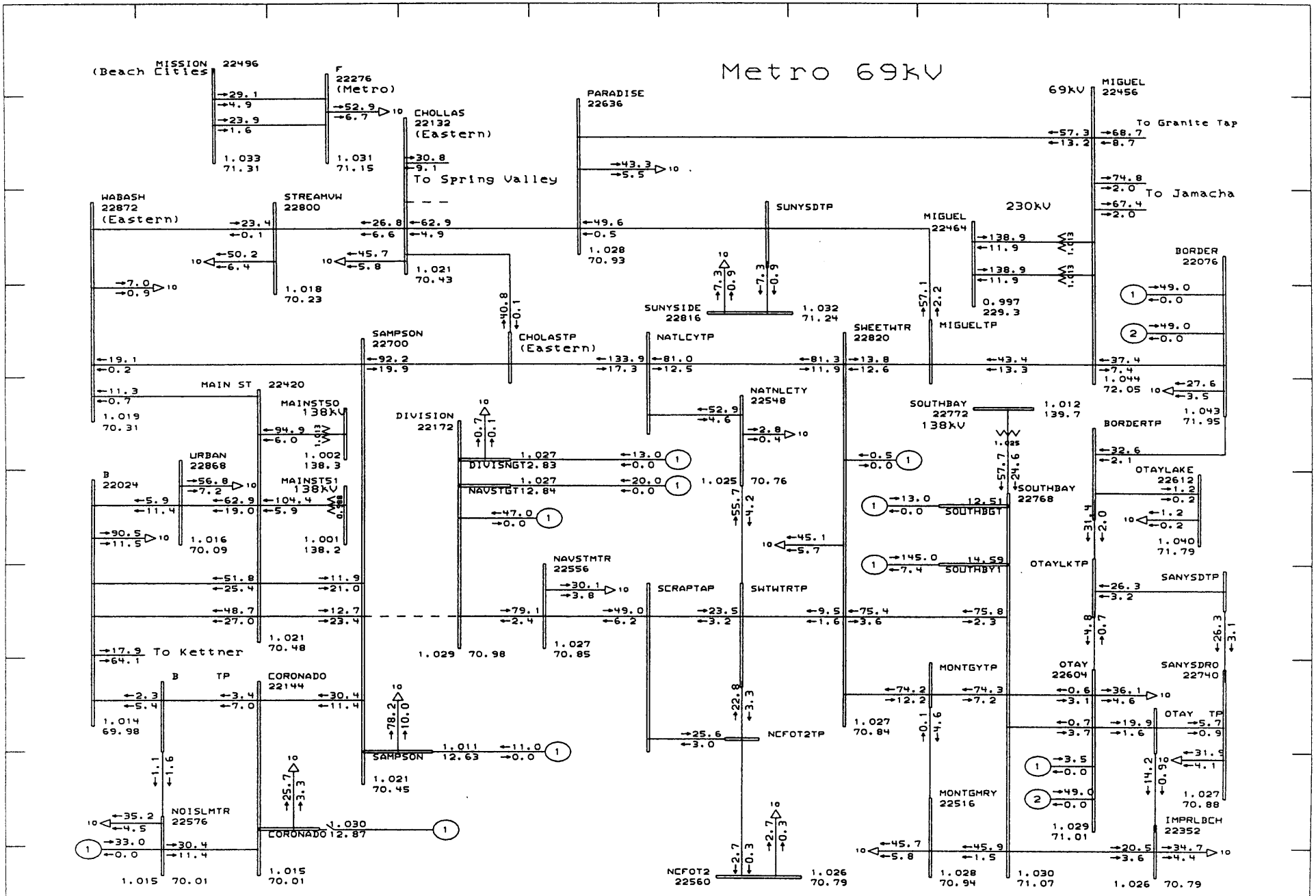

General Electric International, Inc. PSLF Program MW/MVAR Fri Feb 09 18:20:12 2001

GENERAL ELECTRIC COMPANY

2001 Heavy Summer Base Case, Max. gen at South Bay
SDG&E Load & Losses = 4256 MW, Imp. = -2650 MW, CFE Imp = 0 MW
Base Case, ALIS, no area peaking, EOR = 4323 MW, SCIT= 11497 MW

Originated from WSCC 00hs3f
N-1 Sampson-Division 69kV (w/ DIGT & NSGT on)

mt69nt.drw
Oigen_dg3_max_sy.sav
Rating = 1

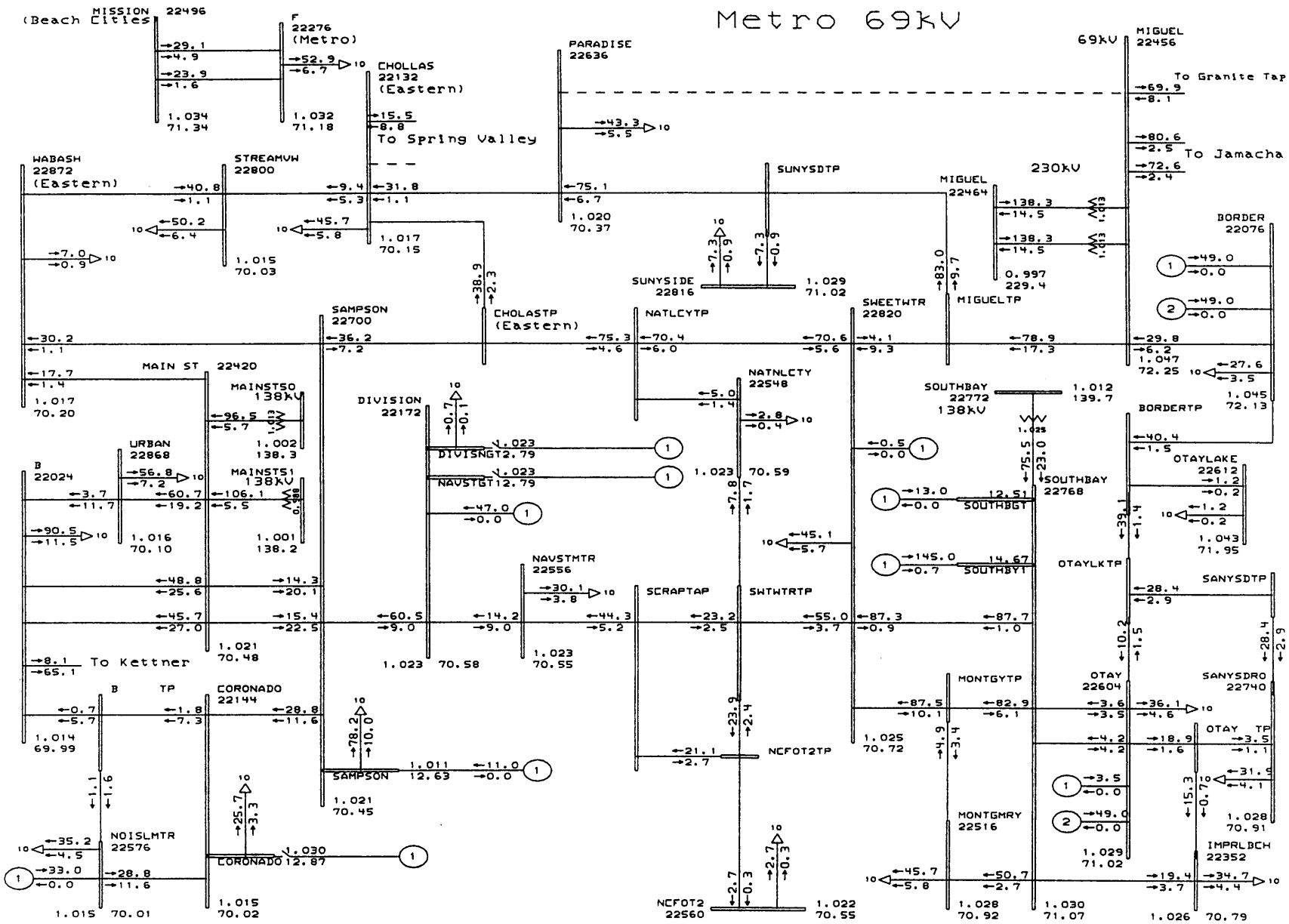

General Electric International, Inc. PSLF Program MW/MVAR Fri Feb 09 18:28:44 2001

GENERAL ELECTRIC COMPANY

2001 Heavy Summer Base Case, Max. gen at South Bay
SDG&E Load & Losses = 4256 MW, Imp. = -2650 MW, CFE Imp = 0 MW
Base Case, ALIS, no area peaking, EOR = 4323 MW, SCIT= 11497 MW

Originated from WSCC 00hs3f
N-1 Pardise-Miguel 69kV

mt69nt.drw
01gen_dg3_max_sy.sav
Rating = 1

APPENDIX F

Sensitivity Study for RFB Dispatch

Total South Bay Generation: 690 MW
Mission RFB unit = 49MW
Escondido RFB 2units = 98MW
El Cajon RFB unit = 49MW

1) N-1 Sweetwater-South Bay 69kV
   (Otay unit= 0, Boder= 0)
2) N-1 Sweetwater-South Bay 69kV
   (Otay unit= 49, Boder= 0)
3) N-1 Sweetwater-South Bay 69kV
   (Otay unit= 49, Boder= 49)
4) N-1 Sweetwater-South Bay 69kV
   (Otay unit= 49, Boder= 98)

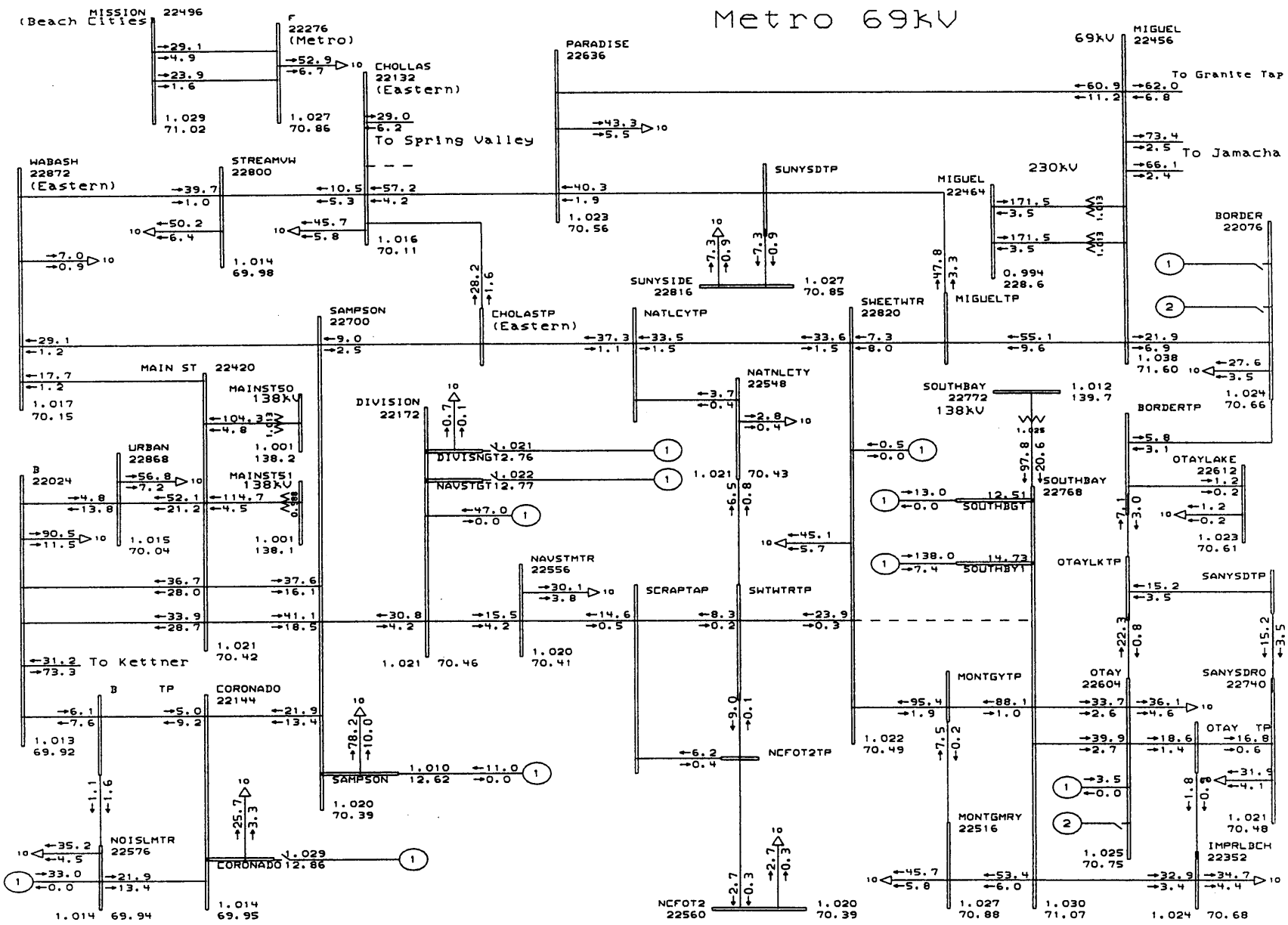

General Electric International, Inc. PSLF Program MW/MVAR Thu Feb 15 20:20:44 2001

GENERAL ELECTRIC COMPANY

Otay= 0; Border= OMW; with Max gen at South Bay
SDG&E Load & Losses = 4256 MW, Imp. = -2650 MW, CFE Imp = 0 MW
Base Case. ALIS. no area peaking. EOR = 4323 MW. SFIT= 11497 MW

Originated from WSCC 00hs3f
N-1 South Bay-Sweetwater 69kV

mt69nt.drw
01base_max_sy.sav
Rating = 1

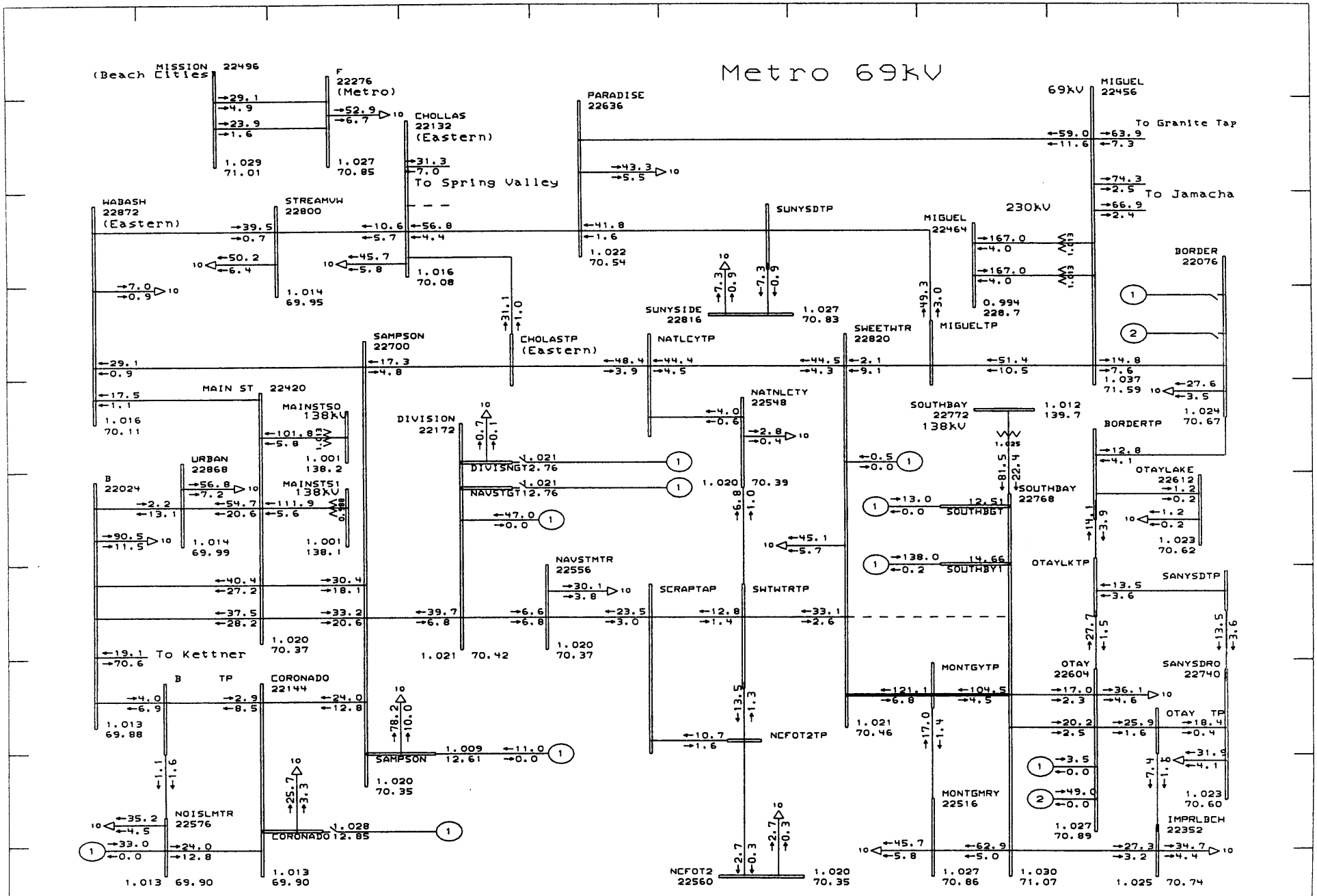

General Electric International, Inc. PSLF Program MW/MVAR Thu Feb 15 20:23:16 2001

GENERAL ELECTRIC COMPANY

Otay=49; Border= OMW; with Max gen at South Bay
SDG&E Load & Losses = 4256 MW, Imp. = -2650 MW, CFE Imp = 0 MW
Base Case. ALIS. no area peaking. EOR = 4323 MW. SCIT= 11497 MW

Originated from WSCC 00hs3f
N-1 South Bay-Sweetwater 69kV

mt69nt.drw
01base_max_sy.sav
Rating = 1

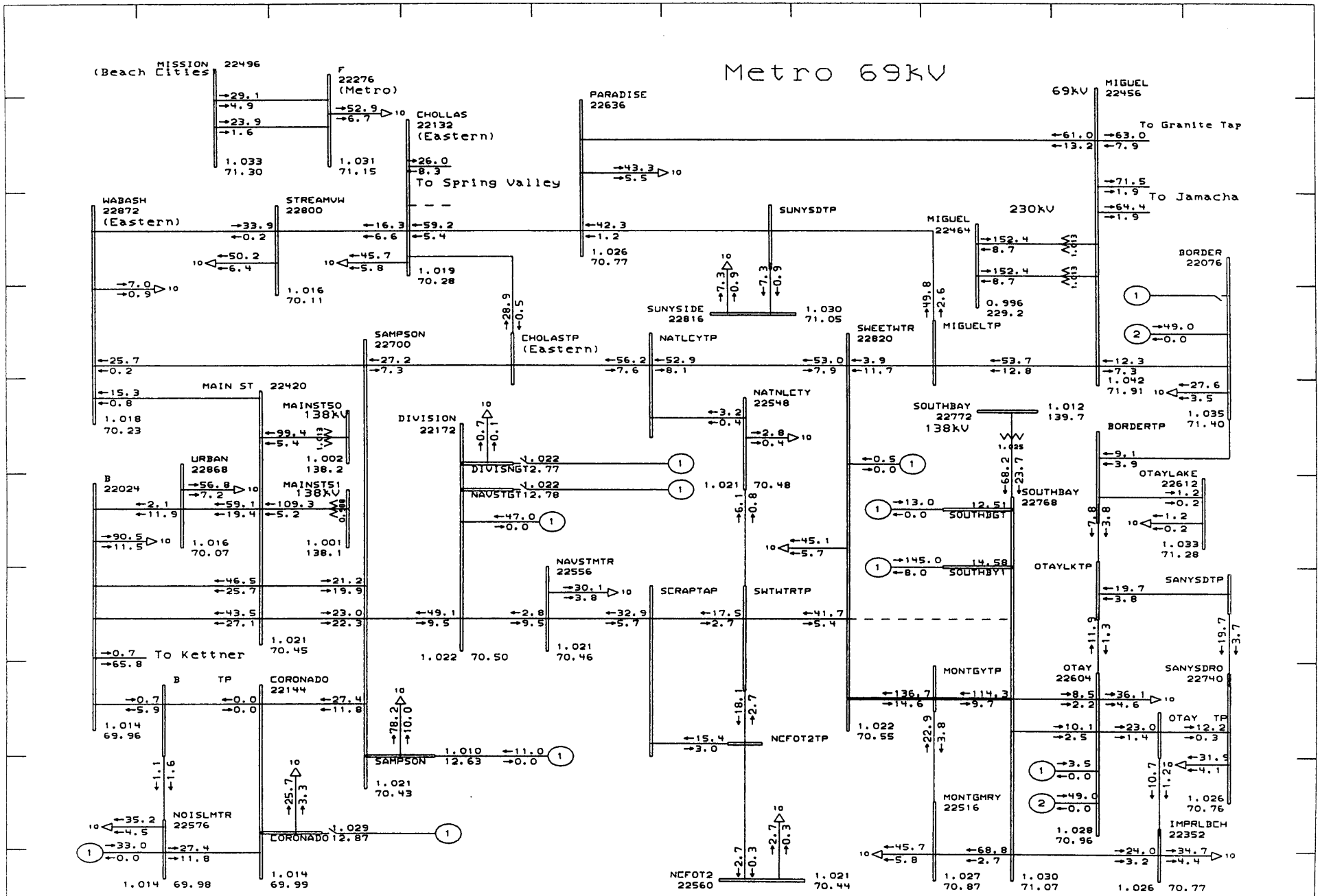

General Electric International, Inc. PSLF Program MW/MVAR Thu Feb 15 20:29:30 2001

GENERAL ELECTRIC COMPANY

Otay=49, Border=49, Max. gen at South Bay
SDG&E Load & Losses = 4256 MW, Imp. = -2650 MW, CFE Imp = 0 MW
Base Case, ALIS, no area peaking, FOR = 4323 MW, SCIT= 11497 MW

Originated from WSCC 00hs3f
N-1 Southbay-Sweetwater 69kV

mt69nt.drw
01gen_dg3_max_sy.sav

APPENDIX G

Sensitivity Study for South Bay Dispatch

Maximum generation at 69kV and reduce 138kV generation

Reduce 69kV generation and maximum 69kV generation

Appendix G-1

South Bay Generation Dispatch Sensitivity

Maximum generation at 138kV and reduce 69kV generation

South Bay 69kV Generation (unit 1& SYGT): 158 MW
South Bay 138kV generation (unit2, 3, 4): 118 MW
Otay RFB unit = 49MW
Border RFB 2 units = 98MW
Mission RFB unit = 49MW
Escondido RFB 2units = 98MW
El Cajon RFB unit = 49MW

1) N-0 Base Case
2) N-1 Sweetwater-South Bay 69kV
3) N-1 Sweetwater-South Bay-Montgomery 69kV
4) N-1 Sweetwater-National City-FOT-Naval Station 69kV
5) N-1 Sweetwater-National City-Chollas-Sampson 69Kv
   (With DIGT= 0; NSGT= 0)
6) N-1 Sweetwater-National City-Chollas-Sampson 69kV
   (With DIGT= 13; NSGT= 20)

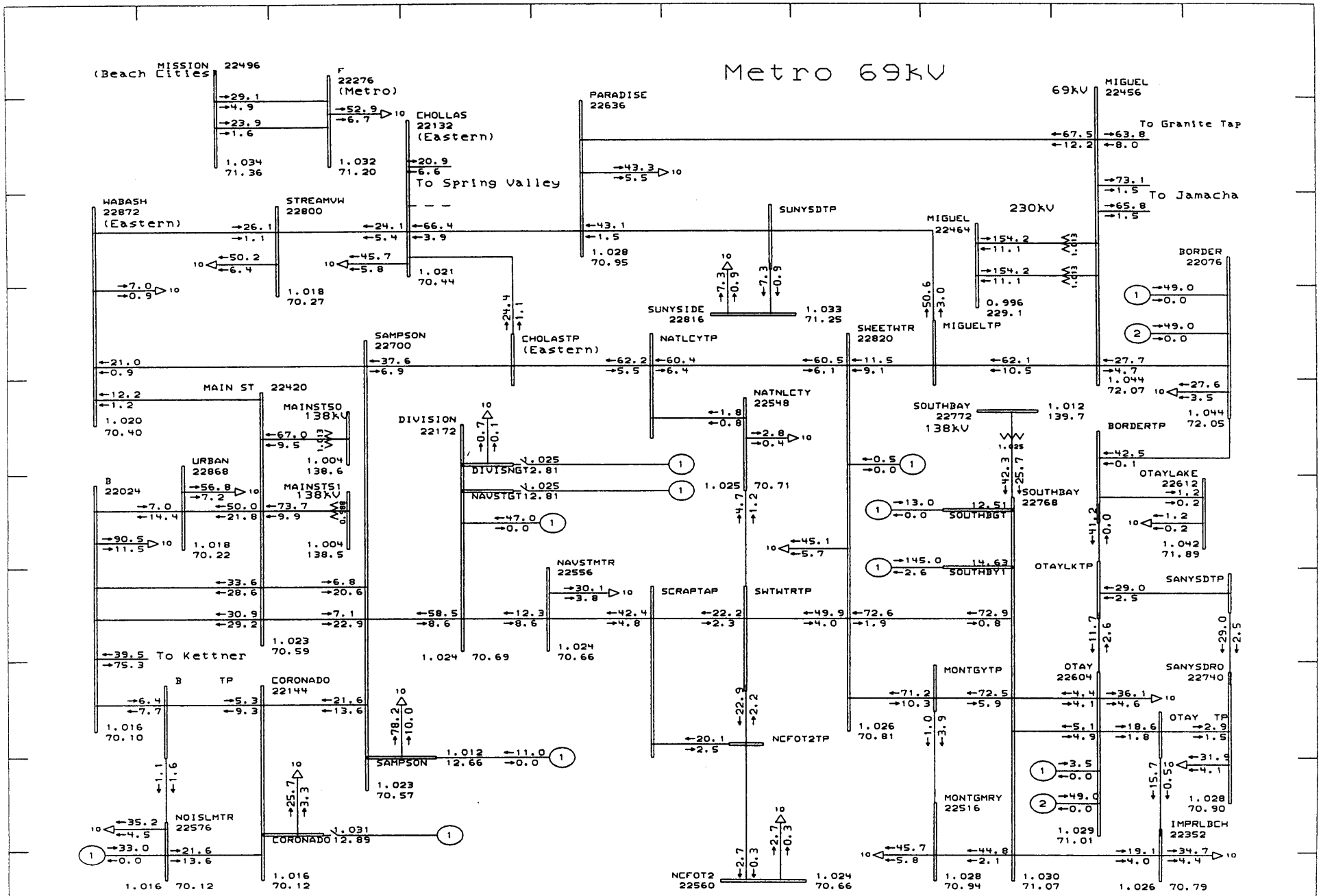

General Electric International, Inc. PSLF Program MW/MVAR Sun Feb 11 10:48:53 2001

GENERAL ELECTRIC COMPANY

2001 Heavy Summer Base Case, Max. gen at South Bay
SDG&E Load & Losses = 4256 MW, Imp. = -2650 MW, CFE Imp = 0 MW
Base Case, ALIS, no area peaking, EOR = 4323 MW, SCIT= 11497 MW

Originated from WSCC 00hs3f
N-0 base case (Reduce SY 138kV gen & w/ SY 69kV max)

mt69nt.drw
01gen_dg3_max_sy.sav
Rating = 1

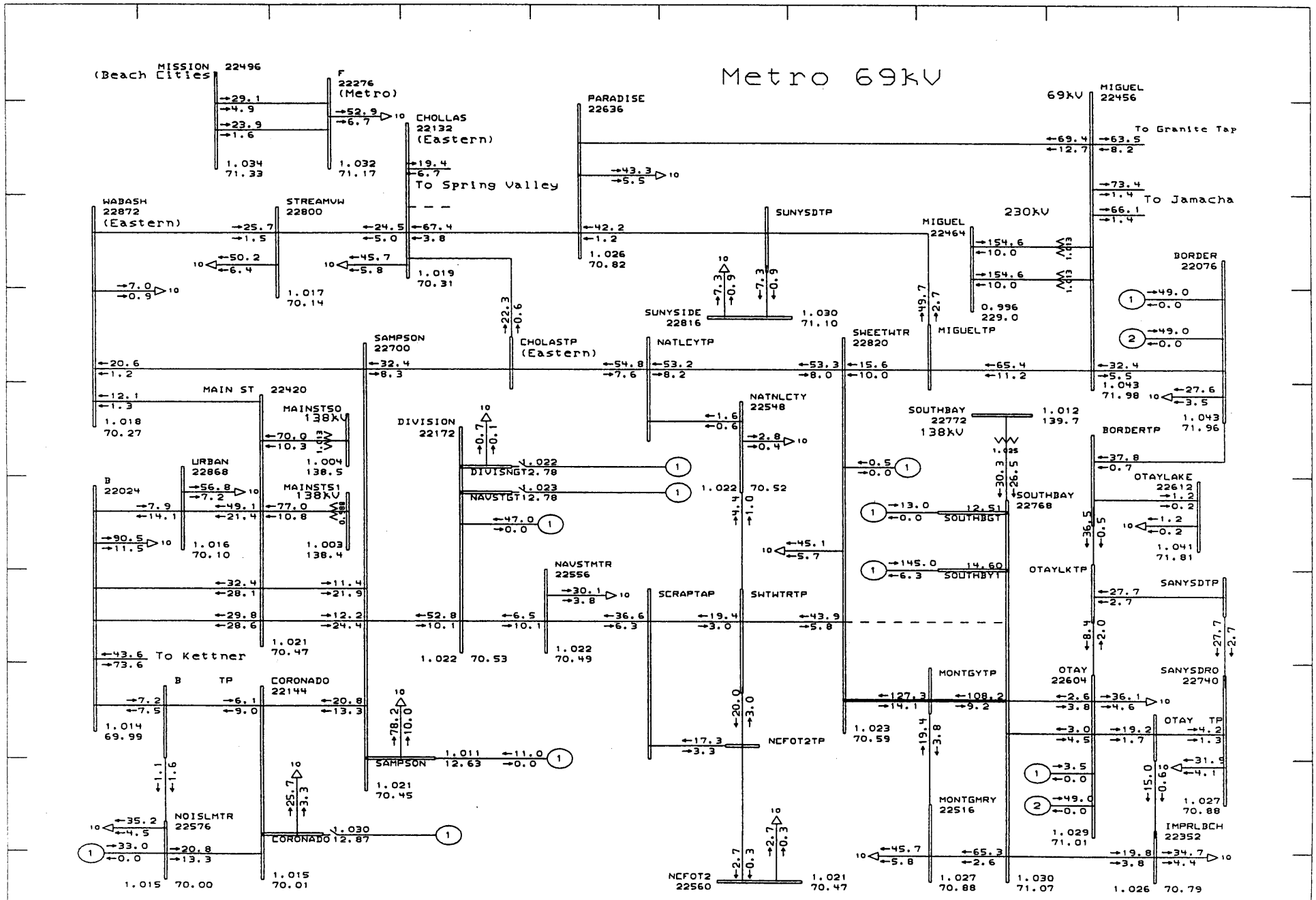

General Electric International, Inc. PSLF Program MW/MVAR Sun Feb 11 10:43:52 2001

GENERAL ELECTRIC COMPANY

2001 Heavy Summer Base Case, Max. gen at South Bay
SDG&E Load & Losses = 4256 MW, Imp. = -2650 MW, CFE Imp = 0 MW
Base Case, ALIS, no area peaking, EOR = 4323 MW, SCIT= 11497 MW

Originated from WSCC 00hs3f
N-1 South Bay-Sweetwater (Reduce SY 138kV gen & w/ SY 69kV max)

mt69nt.drw
0lgen_dg3_max_sy.sav
Rating = 1

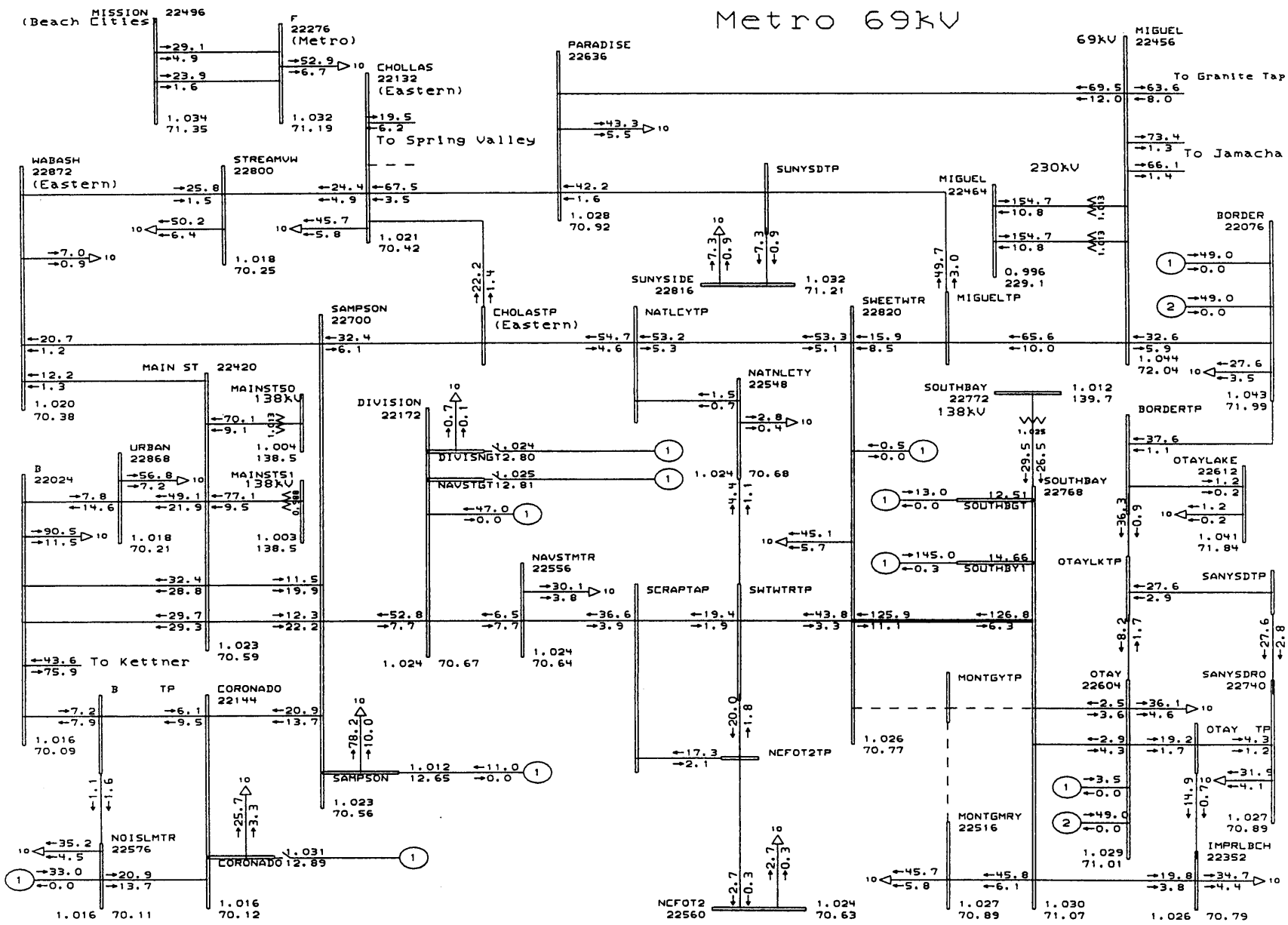

General Electric International, Inc. | PSLF Program | MW/MVAR | Sun Feb 11 10:56:42 2001

GENERAL ELECTRIC COMPANY

2001 Heavy Summer Base Case, Max. gen at South Bay
SDG&E Load & Losses = 4256 MW, Imp. = -2650 MW, CFE Imp = 0 MW
Base Case, ALIS, no area peaking, EOR = 4323 MW, SCIT= 11497 MW

Originated from WSCC 00hs3f
N-1 South Bay-Sweetwater-Montgomery (Reduce SY 138kV gen & w/ SY 69

mt69nt.drw
01gen_dg3_max_sy.sav
Rating = 1

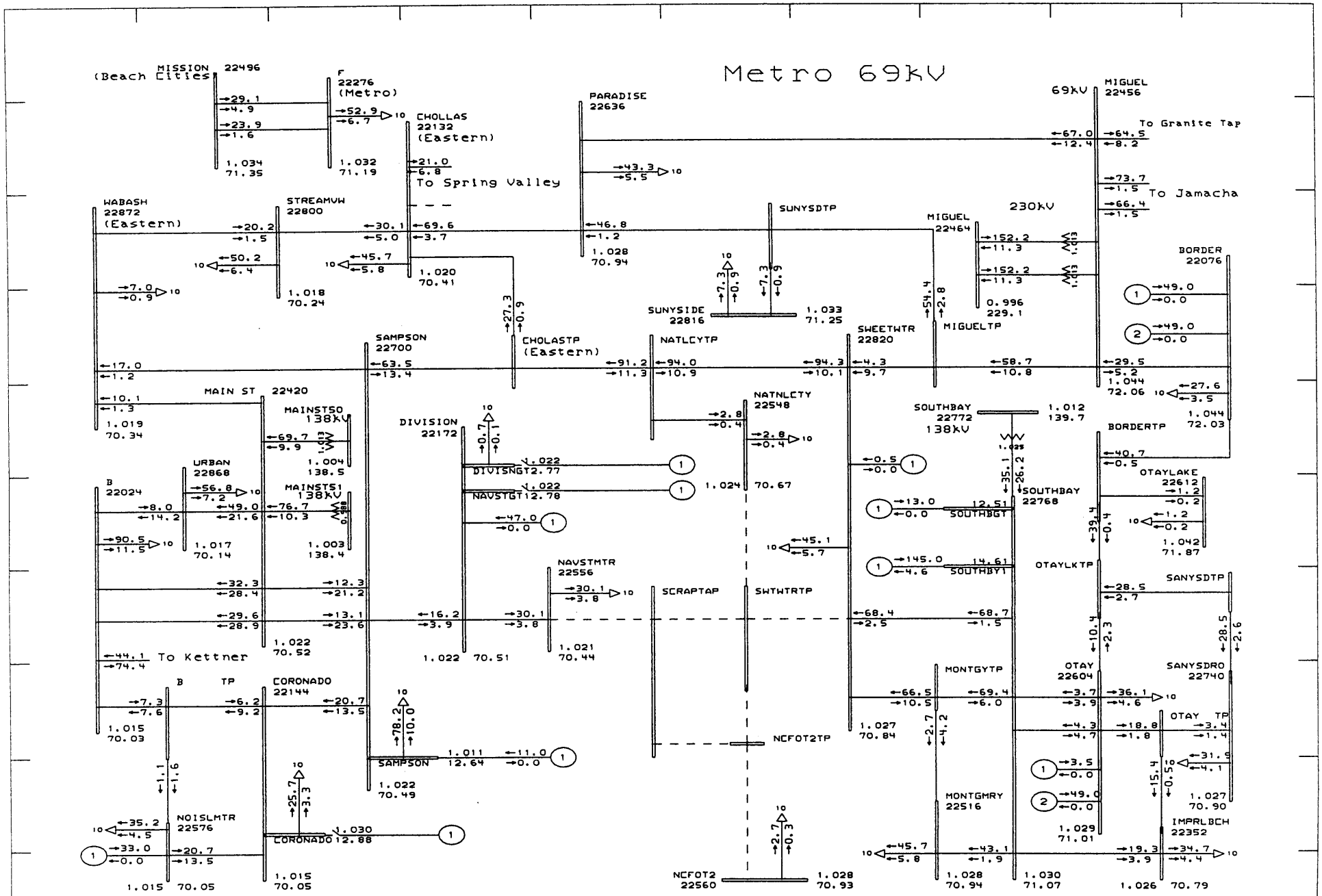

General Electric International, Inc. PSLF Program MW/MVAR Sun Feb 11 11:26:16 2001

GENERAL ELECTRIC COMPANY

2001 Heavy Summer Base Case, Max. gen at South Bay
SDG&E Load & Losses = 4256 MW, Imp. = -2650 MW, CFE Imp = 0 MW
Base Case, ALIS, no area peaking, EOR = 4323 MW, SCIT= 11497 MW

Reduce SY 138kV gen & w/ SY 69kV max.
N-1 Sweetwater-National City-FOT-Naval Station 69kV

mt69nt.drw
01gen_dg3_max_sy.sav
Rating = 1

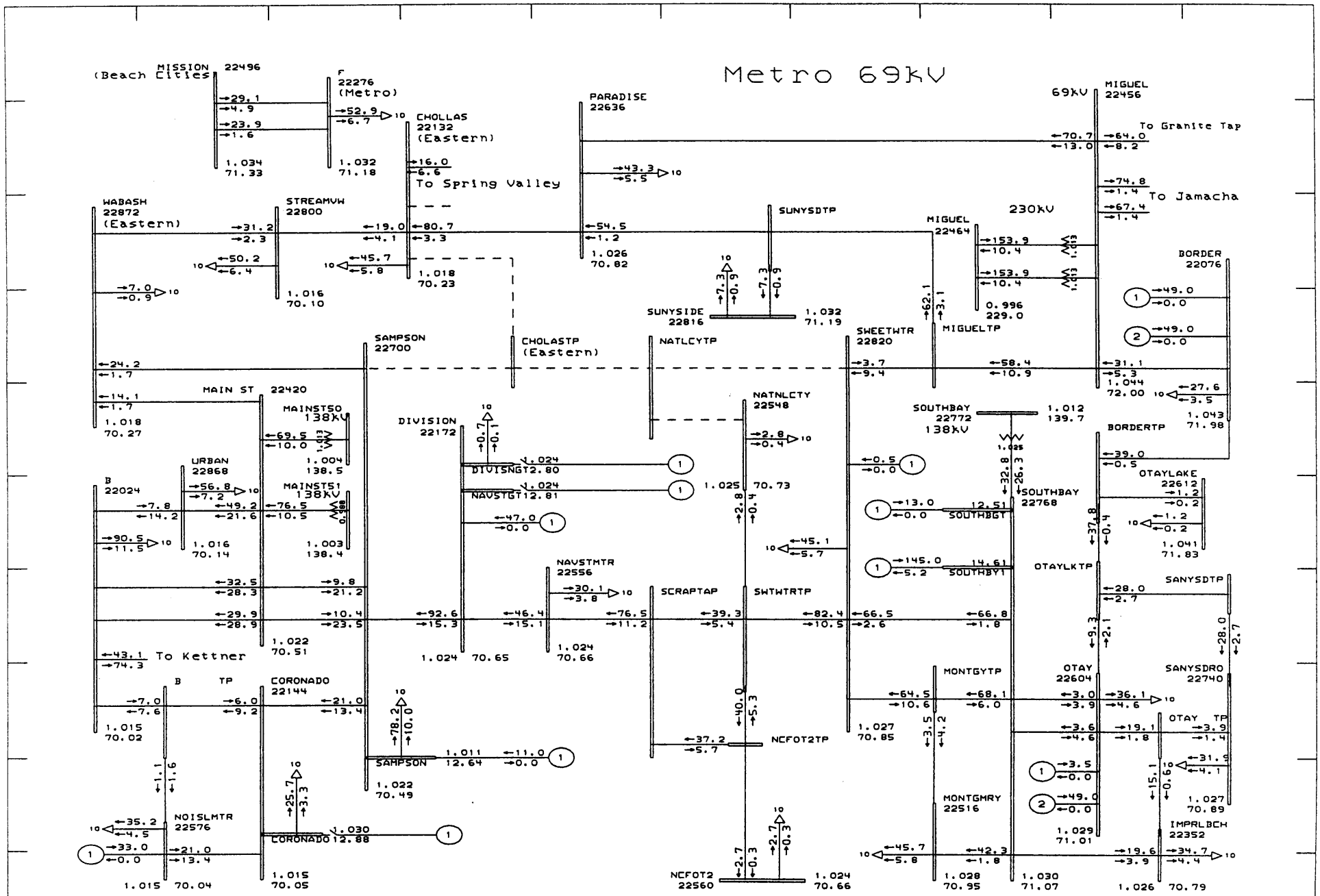

General Electric International, Inc. | PSLF Program | MW/MVAR | Sun Feb 11 11:08:15 2001

GENERAL ELECTRIC COMPANY

2001 Heavy Summer Base Case, Max. gen at South Bay
SDG&E Load & Losses = 4256 MW, Imp. = -2650 MW, CFE Imp = 0 MW
Base Case. ALIS. no area peaking. EOR = 4323 MW. SCIT= 11497 MW

Reduce SY 138kV gen & w/ SY 69kV max. W/o DIGT & NSGT
N-1 Sweetwater-National City-Chollas-Sampson 69kV

mt69nt.drw
01gen_dg3_max_sy.sav
Rating = 1

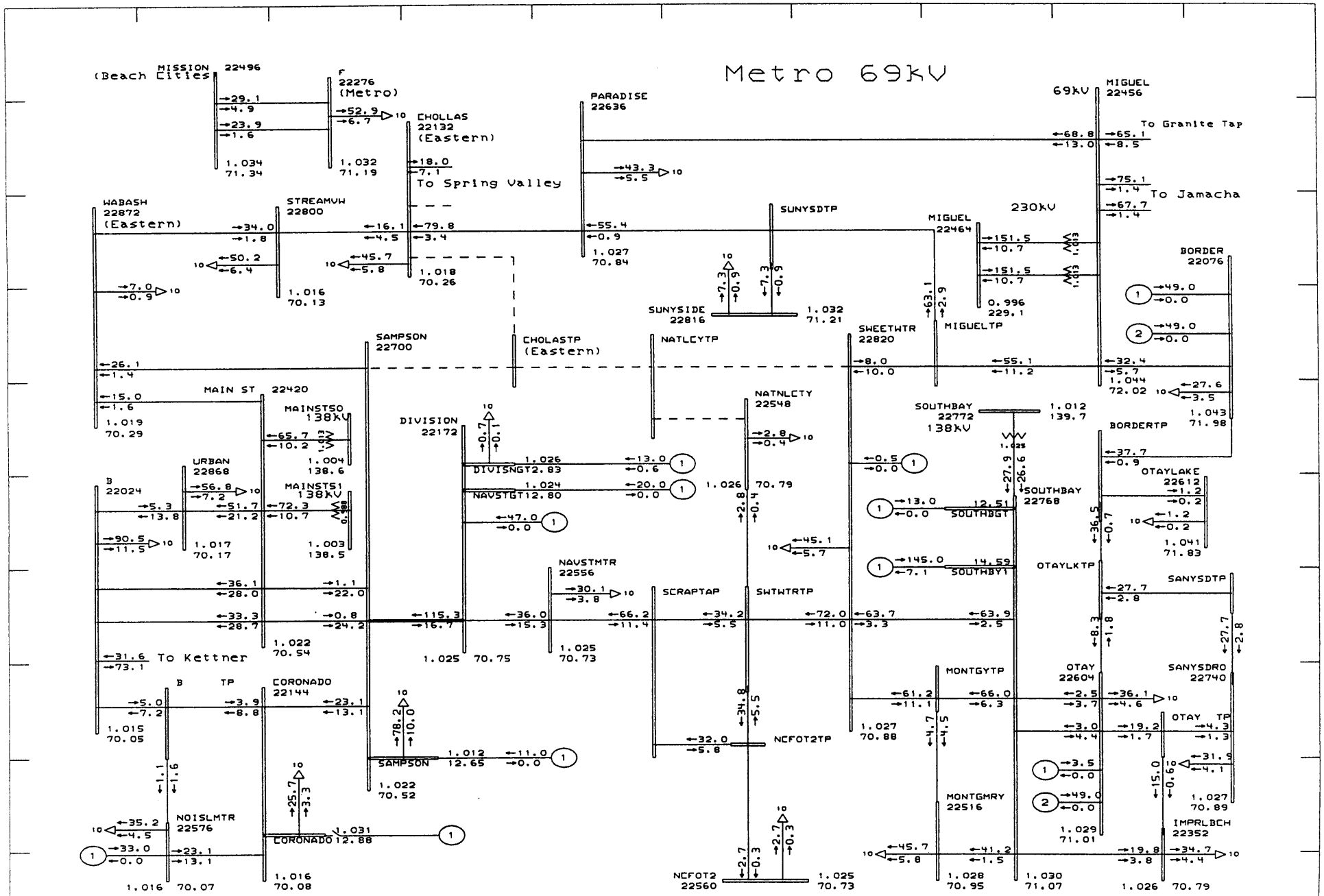

General Electric International, Inc. PSLF Program MW/MVAR Sun Feb 11 11:14:17 2001

GENERAL ELECTRIC COMPANY

2001 Heavy Summer Base Case, Max. gen at South Bay
SDG&E Load & Losses = 4256 MW, Imp. = -2650 MW, CFE Imp = 0 MW
Base Case. ALIS. no area peaking. EOR = 4323 MW. SCIT= 11497 MW

Reduce SY 138kV gen & w/ SY 69kV max. W/ DIGT & NSGT on line
N-1 Sweetwater-National City-Chollas-Sampson 69kV

mt69nt.drw
01gen_dg3_max_sy.sav
Rating = 1

Appendix G-2

South Bay Generation Dispatch Sensitivity

Maximum generation at 69 kV and reduce 138kV generation

South Bay 69kV Generation (unit 1& SYGT): 58 MW
South Bay 138kV generation (unit2, 3, 4): 532 MW
Otay RFB unit = 49MW
Border RFB 2 units = 98MW
Mission RFB unit = 49MW
Escondido RFB 2units = 98MW
El Cajon RFB unit = 49MW

1) N-0 Base Case
2) N-1 Sweetwater-South Bay 69kV
3) N-1 Sweetwater-South Bay-Montgomery 69kV
4) N-1 Sweetwater-National City-FOT-Naval Station 69kV
5) N-1 Sweetwater-National City-Chollas-Sampson 69Kv
   (With DIGT= 0; NSGT= 0)
6) N-1 Sweetwater-National City-Chollas-Sampson 69kV
   (With DIGT= 13; NSGT= 20)

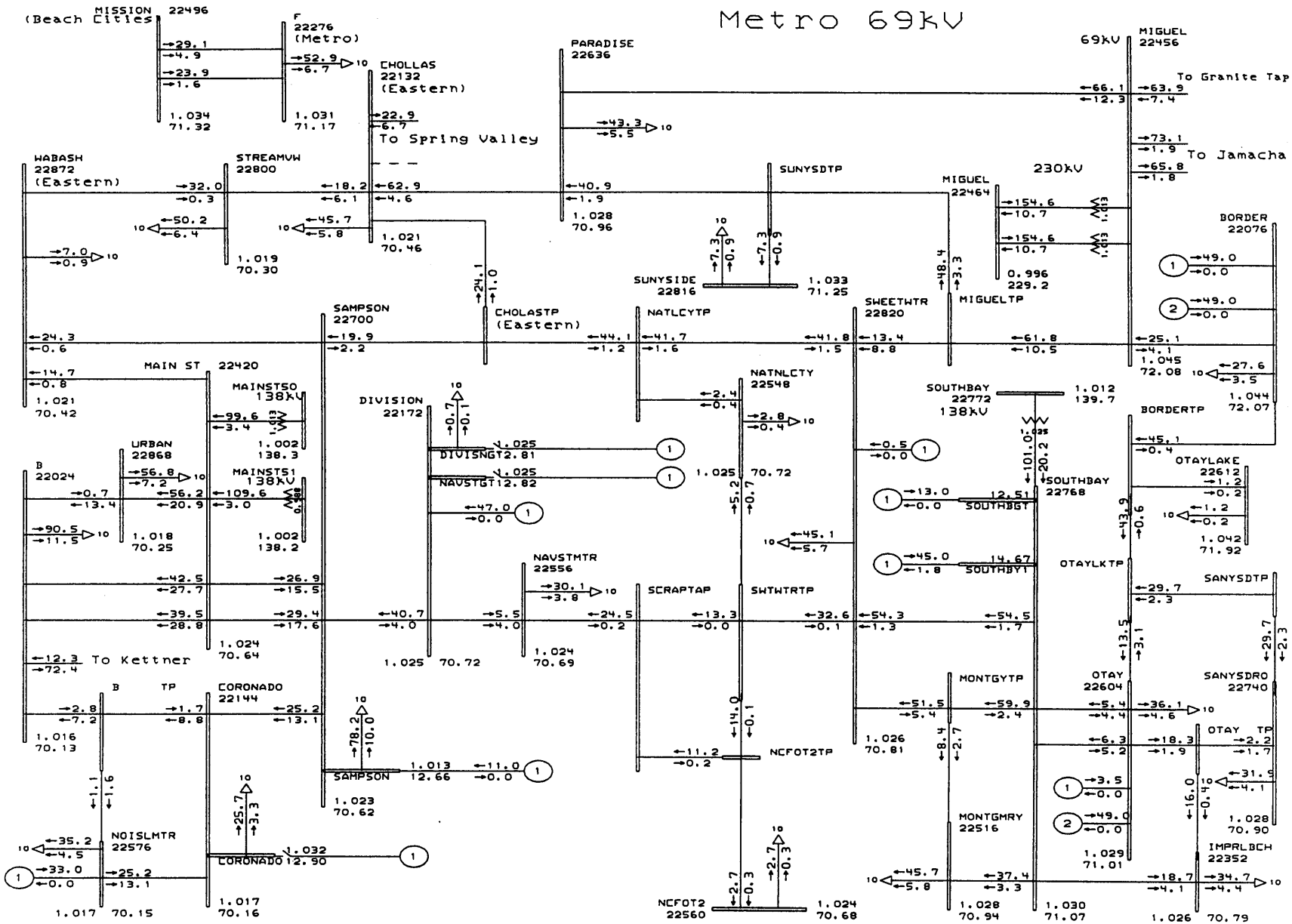

General Electric International, Inc. PSLF Program MW/MVAR Sun Feb 11 11:34:57 2001

GENERAL ELECTRIC COMPANY

2001 Heavy Summer Base Case, Max. gen at South Bay
SDG&E Load & Losses = 4256 MW, Imp. = -2650 MW, CFE Imp = 0 MW
Base Case, ALIS, no area peaking, EOR = 4323 MW, SCIT= 11497 MW

Reduce SY 69kV gen & w/ SY 138kV max
N-0 base case

mt69nt.drw
01gen_dg3_max_sy.sav
Rating = 1

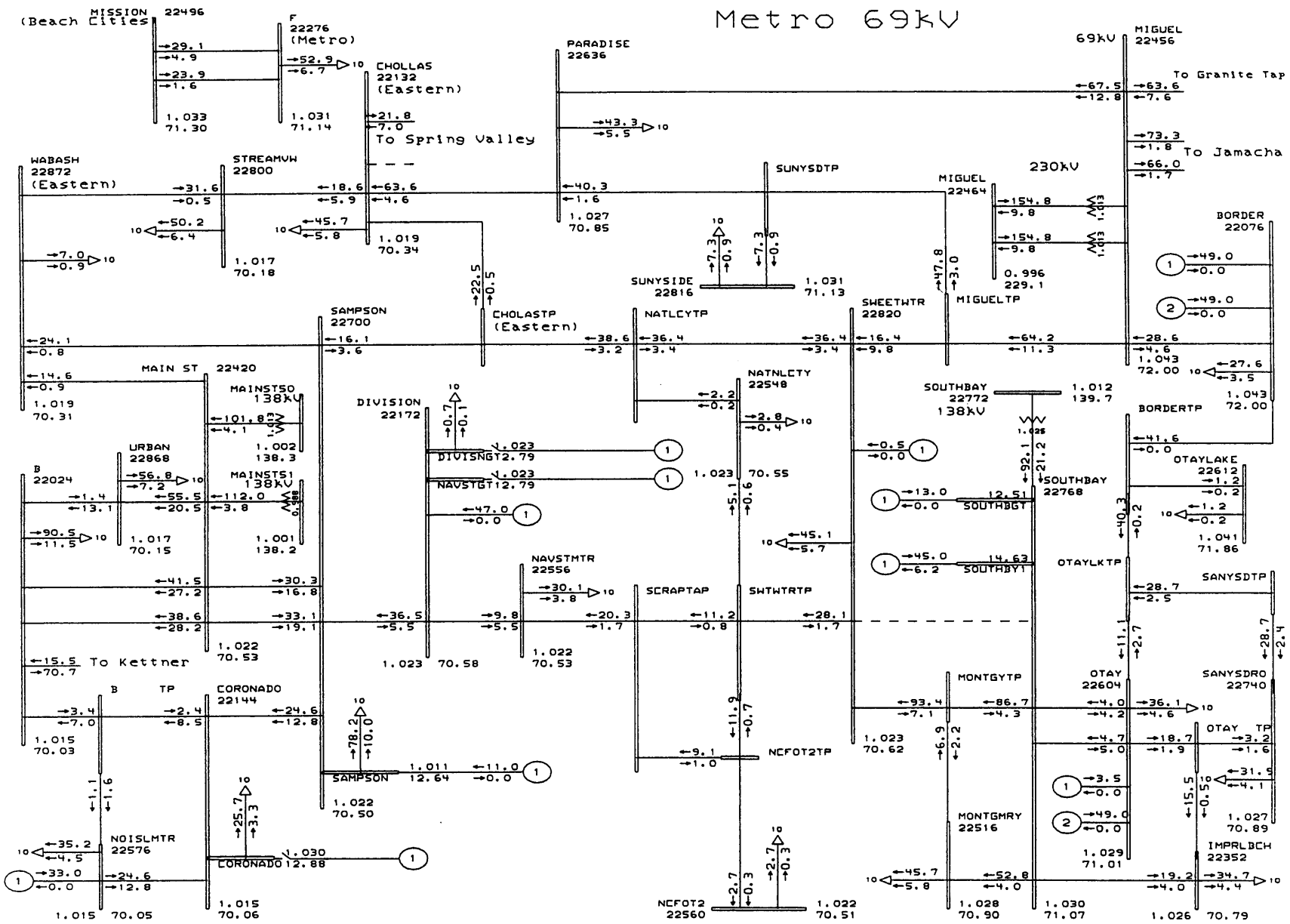

General Electric International, Inc. PSLF Program MW/MVAR Sun Feb 11 11:36:55 2001

GENERAL ELECTRIC COMPANY

2001 Heavy Summer Base Case, Max. gen at South Bay
SDG&E Load & Losses = 4256 MW, Imp. = -2650 MW, CFE Imp = 0 MW
Base Case, ALIS, no area peaking, EOR = 4323 MW, SCIT= 11497 MW

Reduce SY 69kV gen & w/ SY 138kV max
N-1 South Bay-Sweetwater 69kV

mt69nt.drw
Oigen_dg3_max_sy.sav
Rating = 1

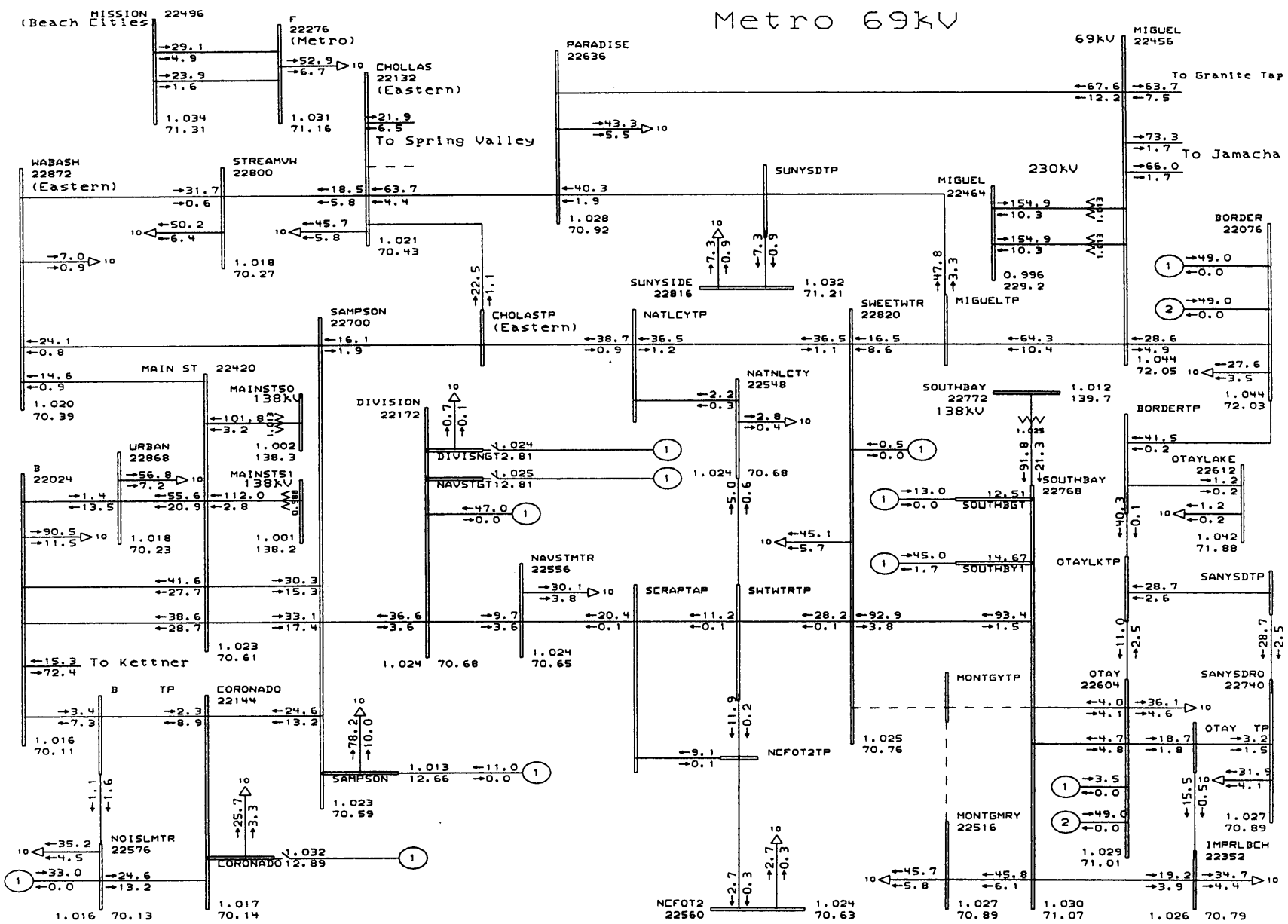

General Electric International, Inc. PSLF Program MW/MVAR Sun Feb 11 11:44:30 2001

GENERAL ELECTRIC COMPANY

2001 Heavy Summer Base Case, Max. gen at South Bay
SDG&E Load & Losses = 4256 MW, Imp. = -2650 MW, CFE Imp = 0 MW
Base Case. ALIS. no area peaking. EOR = 4323 MW. SCIT= 11497 MW

Reduce SY 69kV gen & w/ SY 138kV max
N-1 South Bay-Sweetwater-Montgomery 69kV

mt69nt.drw
01gen_dg3_max_sy.sav
Rating = 1

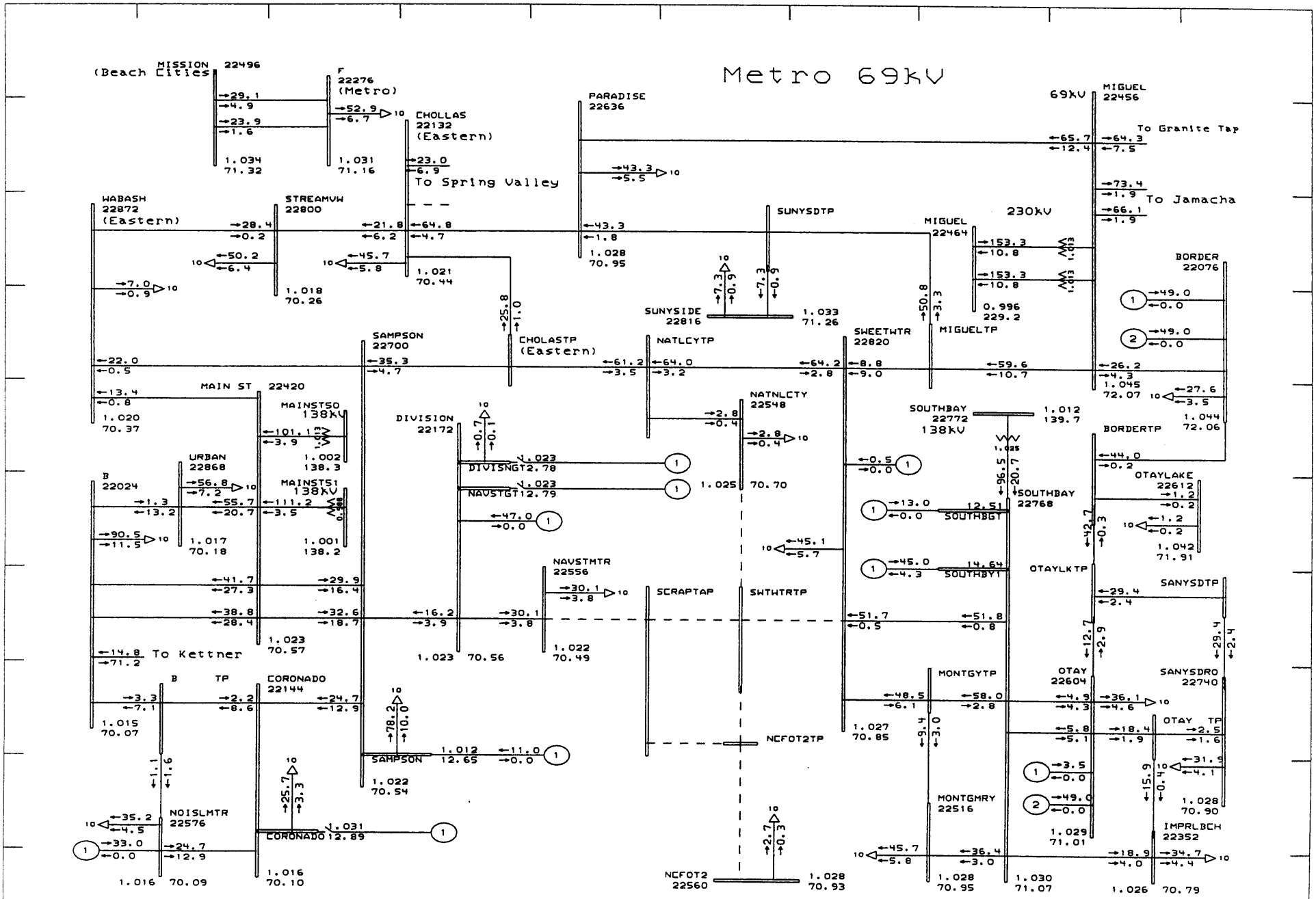

General Electric International, Inc. PSLF Program MW/MVAR Sun Feb 11 12:01:12 2001

GENERAL ELECTRIC COMPANY

2001 Heavy Summer Base Case, Max. gen at South Bay
SDG&E Load & Losses = 4256 MW, Imp. = -2650 MW, CFE Imp = 0 MW
Base Case, ALIS, no area peaking, EOR = 4323 MW, SCIT= 11497 MW

Reduce SY 69kV gen & w/ SY 138kV max.
N-1 South Bay-Sweetwater-FOT-Naval Station 69kV

mt69nt.drw
01gen_dg3_max_sy.sav
Rating = 1

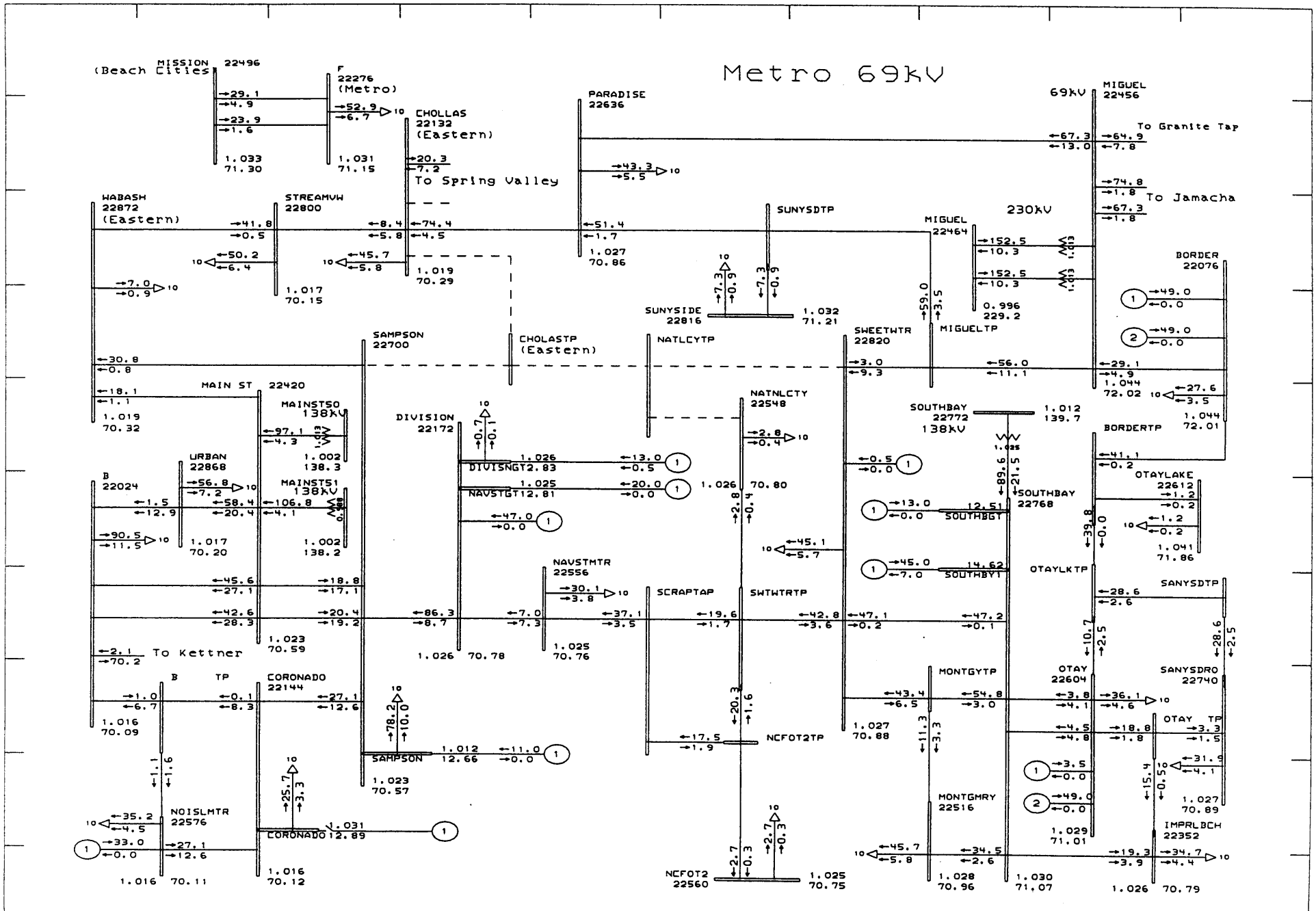

General Electric International, Inc. PSLF Program MW/MVAR Sun Feb 11 11:50:30 2001

GENERAL ELECTRIC COMPANY

2001 Heavy Summer Base Case, Max. gen at South Bay
SDG&E Load & Losses = 4256 MW, Imp. = -2650 MW, CFE Imp = 0 MW
Base Case, ALIS, no area peaking, EOR = 4323 MW, SCIT= 11497 MW

Reduce SY 69kV gen & w/ SY 138kV max. W/ DIGT & NSGT on line

mt69nt.drw
01gen_dg3_max_sy.sav
Rating = 1