TETRA TECH EC, INC.

DOCKET
11-AFC-3
DATE APR 06 2012
RECD. APR 06 2012

April 6, 2012

Mr. Eric Solorio
Project Manager
California Energy Commission
Docket No. 11-AFC-3
1516 9th St.
Sacramento, CA 95814

Cogentrix Quail Brush Generation Project – Docket Number 11-AFC-3, Data Request Responses to Set 2

Dear Mr. Solorio:

Pursuant to the provisions of Title 20, California Code of Regulation, Quail Brush Genco, LLC, a wholly owned subsidiary of Cogentrix Energy, LLC, hereby submits the *Data Request Responses to Set 2 for the Quail Brush Generation Project.* The Quail Brush generation Project is a 100 megawatt natural gas fired electric generation peaking facility to be located in the City of San Diego, California.

These six responses were compiled in response to the Energy Commission's QUAIL BRUSH GENERATION PROJECT (11-AFC-3), Staff's Data Requests, 59 through 64, dated March 5, 2012 and posted on April 4, 2012. This document provides the additional information necessary to fulfill the Application for Certification data requests for the following technical areas:

- Transmission System Engineering

If you have any questions regarding this submittal, please contact Rick Neff at (704) 525-3800 or me at (303) 980-3653.

Sincerely,

Constance E. Farmer
Project Manager/Tetra Tech

cc: Lori Ziebart, Cogentrix
John Collins, Cogentrix
Rick Neff, Cogentrix

17885 Von Karman Avenue, Suite 500, Irvine, CA 92614
Tel 949.809.5000 Fax 949.809.5004
www.tteci.com

Transmission System Engineering

59. Provide a complete electrical one-line diagram (or resubmit Exhibit 4 with amended size/ratings of the applicable equipment and/or missing elements) of the proposed QBGP 138/13.8 kV switchyard showing all equipment for all eleven generator units' interconnection with the switchyard with their respective sizes and/or ratings as follows: i) Any bus duct connectors or overhead conductors or cables, 13.8/15 kV switch gear, buses, breakers & disconnect switches on the low side of generator step-up transformer (GSU). ii) The GSU and short overhead conductors/cables from the GSU high side to the switchyard 138 kV bus with the configuration of the switchyard 138 kV buses, breakers, disconnect switches, along with the proposed generator (gen) tie line transmission outlet.

    Response:

    Drawing QBPP-E001 Rev. E "Quail Brush Key One-Line Diagram" is attached as Attachment A.

60. Provide a physical layout drawing of the QBGP 138/13.8 kV switchyard showing all major equipment (generators, buses, transformers, breakers and disconnect switches etc.) and transmission line outlet(s).

    Response:

    Drawing QB-SP-3 Rev. A "Quail Brush Switchyard Layout" is attached as Attachment B (based on the Site Plan included as Figure 2.3-1 from the AFC). A typical A frame structure is attached as Attachment C.

61. Please provide a discussion and drawing of the physical layout showing distinctly (in a larger scale) the preferred route (along any road or land or overhead line) of the proposed 6,850-foot long 138 kV overhead gen tie line including Right of Way (ROW) width(s) between the proposed QBGP 138 kV switchyard and the SDG&E 138 kV Carlton Hills substation. Describe whether the ROW would be through private and/or public lands.

    Response:

    As indicated on Figure 1.1-1 "Project Layout" of Supplement 2 to the AFC docketed February 8, 2012, Quail Brush proposed 4 gen tie routes labeled as Preferred, Alternative 1, Alternative 2, and Alternative 3.

    Quail Brush is currently focused on three gen tie routes. The routes are denoted as Preferred, Alternative 2a, and Alternative 2b and depicted on the attached Figure 1.1-1 "Project Layout". After running north/northeast from the QBGP switchyard for approximately 1,350 feet, the Preferred route runs immediately south of the existing SDG&E 138 kV line and parallels this line to the Carlton Hills Substation (Figure 1.1-1a). The Alternative 2a route crosses the existing SDG&E 138 kV line and parallels the line on the north to the Carlton Hills Substation. The Alternative 2b route also crosses the existing SDG&E 138 kV line, but then takes a more direct route into the Carlton Hills Substation as shown on Figure 1.1-1. The Preferred route will terminate on the empty south bay of the Carlton Hills Substation presently depicted on the SDG&E drawings labeled "After Quail Brush" included in Attachment K. Alternative 2a or 2b routes will terminate on the empty north bay of the

Carlton Hills Substation. Once the final route for the gen tie is selected, the SDG&E drawings provided in Attachments K and L will be updated accordingly.

The crossing of the existing SDG&E 138 kV line required in Alternative 2a and Alternative 2b will not be underground. The crossing would be accomplished by passing the gen tie underneath the SDG&E 138 kV transmission lines but above the ground. The required clearances from the gen tie conductors and SDG&E conductors, as well as, between the gen tie conductors and the ground shall be maintained. Plan and profile drawings for the Preferred, Alternate 2a, and Alternative 2b gen tie routes are included as Attachments D, E, and F, respectively.

In all cases the proposed Quail Brush gen tie right-of-way (ROW) width is 150 feet and runs entirely on private land.

62. Please submit design diagrams of the tangent steel pole and heavy-angle steel pole showing configuration of insulators and conductors with their respective position measurements on the pole including ground clearance from the lowest conductor, height of the pole above and below ground, and the ground conductor, if any, with its size. Also include similar design diagrams of the dead-end poles or structures for the overhead gen tie line at each end.

Response:

The Preferred route has 14 structures and a detail sheet is provided for each (note the structure numbers are shown in the upper right hand corner of the detail sheets) in Attachment G. The Alternative 2a route has 16 structures and all detail sheets are provided in Attachment H. Structures 9 and 10 of the Alternative 2a route are not labeled as such but are detailed on the “H-Frame DE” sheet (Attachment I). The Alternative 2b route has 14 structures and all detail sheets are provided in Attachment J. Same as the Alternative 2a route, structures 9 and 10 are not labeled as such but are detailed on the “H-Frame DE” sheet (Attachment I). The preliminary design of these transmission poles and structures including foundations and burial depth will be finalized during the detailed design phase of the Project and once the final gen tie route has been selected.

The dead-end pole at the QBGP switchyard is depicted on Attachment C. The dead-end pole at SDG&E’s Carlton Hills substation is depicted on Attachment L.

63. Please provide pre and post-project electrical one-line diagrams of the SDG&E Carlton Hills 138 kV substation with all transmission outlets showing the proposed modifications in the substation for interconnection of the gen tie line along with configuration of buses, breaker, disconnect switches, and their respective sizes and/or ratings.

Response:

The pre- and post-Project electrical one-line diagrams of the Carlton Hills 138 kV substation have been provided by SDG&E and are included as Attachment K. The post-Project drawings in Attachment K depict the Preferred route terminating in the empty south bay of the Carlton Hills Substation.

64. Also provide pre and post-project physical layout drawings of the SDG&E Carlton Hills 138 kV substation with all transmission outlets.

Response:

Pre-and post-Project physical layout drawings of the Carlton Hills 138 kV Substation have been provided by SDG&E and are attached as Attachment L. The post-Project physical layout (elevation drawing) at the Carlton Hills 138 kV Substation is represented by Section 2-2 on Attachment L. The pre- and post-Project general arrangements of the Carlton Hills 138 kV Substation are included in Attachment K.

Figures

Figure 1.1-1 Project Layout

Figure 1.1-1a Preferred Route

Attachments

Attachment A Quail Brush Key One-Line Diagram

Attachment B Quail Brush Switchyard Layout

Attachment C Typical A Frame Structure

Attachment D Preferred Route

Attachment E Alternative 2a Route

Attachment F Alternative 2b Route

Attachment G Preferred Route

Attachment H Alternative 2a Route Detail Sheets

Attachment I H-Frame DE

Attachment J Alternative 2b Route Detail Sheets

Attachment K Pre- and Post-Project Electrical One-Line Diagram

Attachment L Pre- and Post-Project Physical Layout Drawings

FIGURES

Printing Date: 3/30/2012 2:46:23 PM
Path: P:\GIS\Projects\4346_QuailBrush\MXD\Project_Description\1.1-1_Project_Layout_032012.mxd

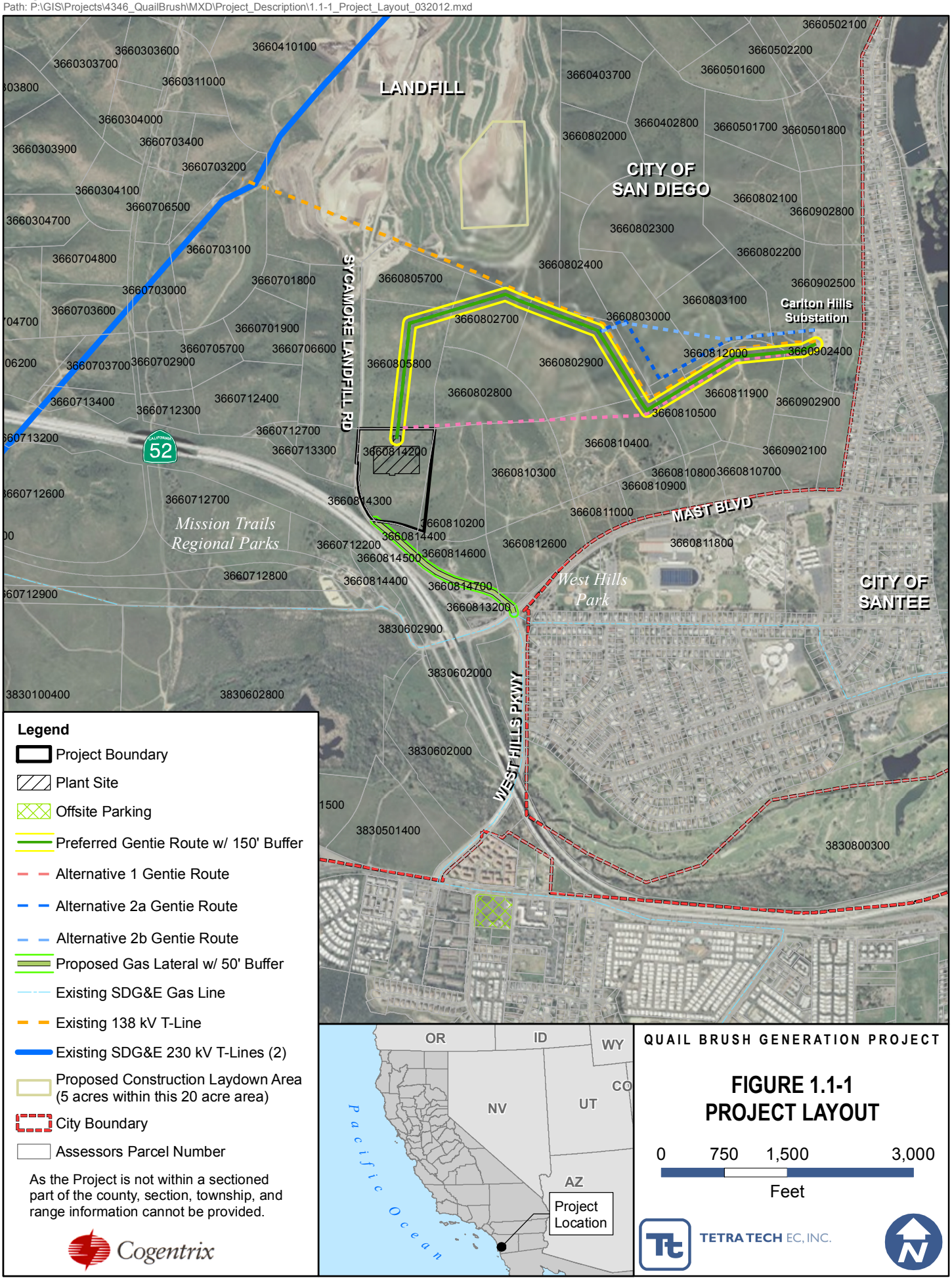

Printing Date: 3/30/2012 2:32:04 PM
Path: P:\GIS\Projects\4346_QuailBrush\MXD\Project_Description\1.1-1a_Preferred_Route_032012.mxd

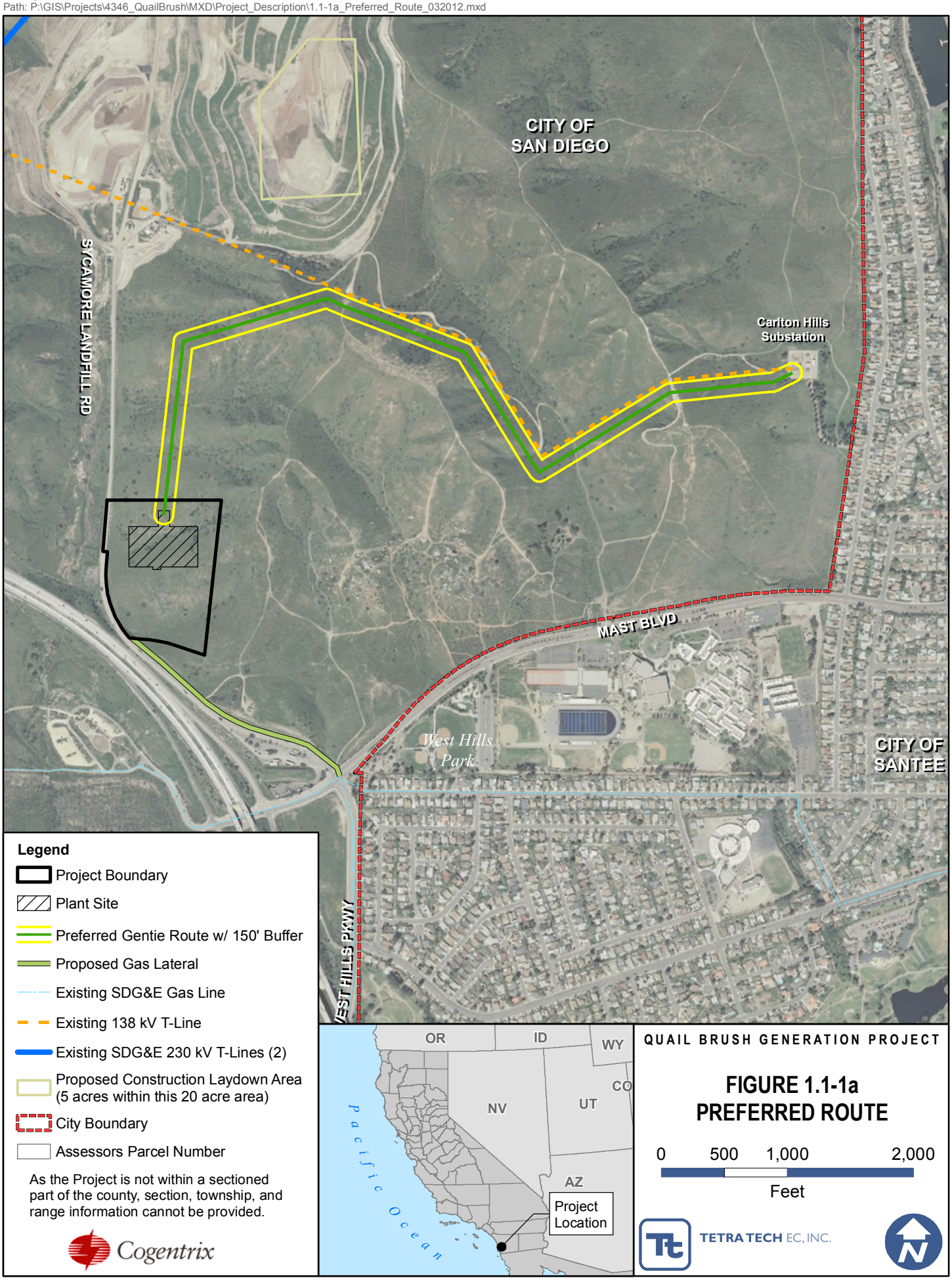

ATTACHMENT A
QUAIL BRUSH KEY ONE-LINE DIAGRAM

NOTES

1. ALL DISCONNECT SWITCHES IN THE SDGE SWITCHYARD ARE RATED 3000A.

LEGEND

- (P) POWER METER
- (M) MOTOR OPERATOR
- (K) KIRK KEY INTERLOCK
- DEAD END TOWER
- LSG (K) POWER CIRCUIT BREAKER W/ STATIC TRIPPING DEVICE
  - L – LONG TIME
  - S – SHORT TIME
  - I – INSTANTANEOUS
  - G – GROUND
- MOLDED CASE THERMAL MAGNETIC CIRCUIT BREAKER WITH SOLID STATE TRIPPING DEVICES (ADJUSTABLE)

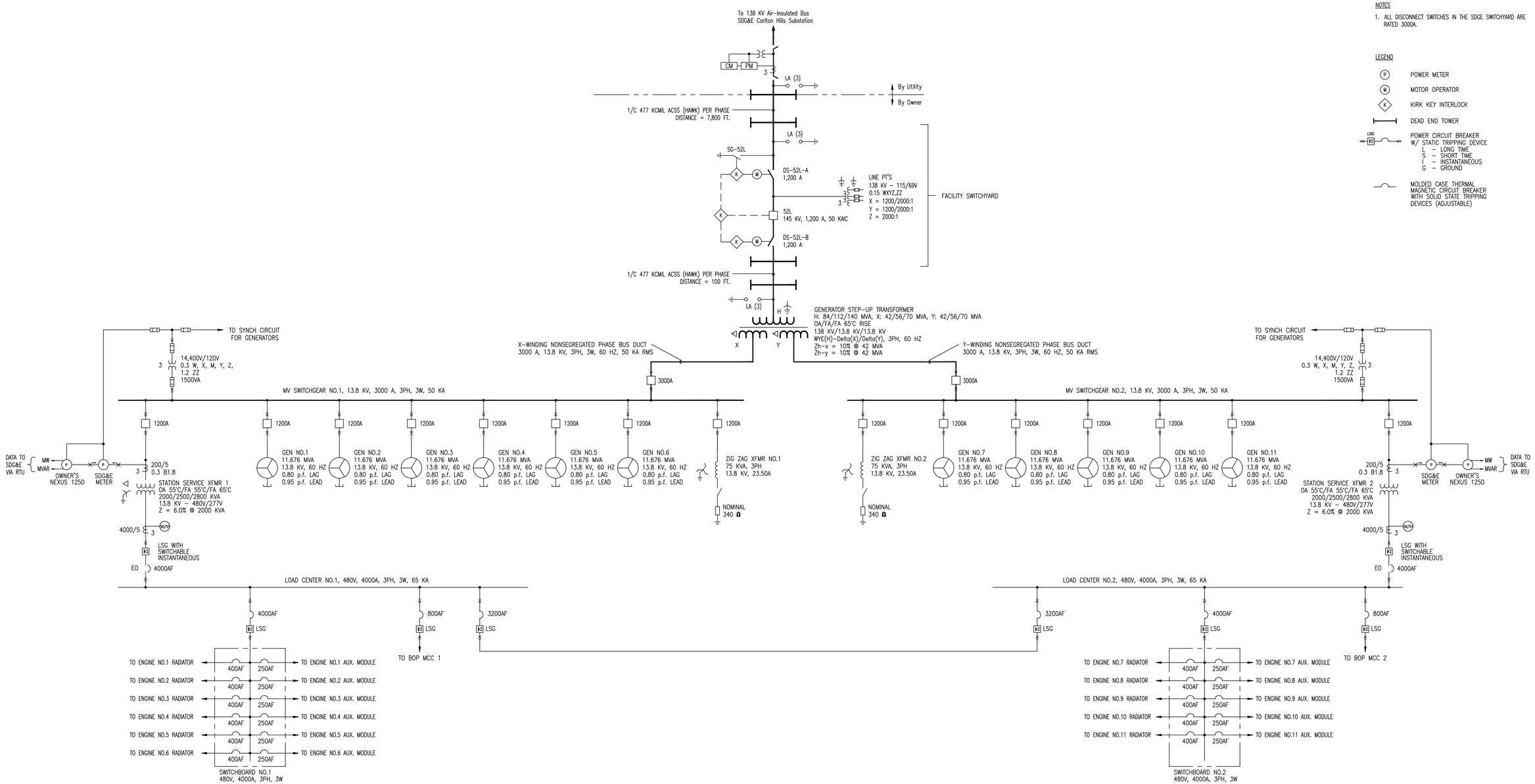

Rev No	Revision	Date	Dwn	ChKd	Approved Chief Engr
A	INITIAL ISSUE 03/14/11				
B	CHANGED SUBSTATION TO SWITCHYARD 06/07/11				
C	REVISED TITLE; ADDED DEAD-END STRUCTURES TO SWITCHYARD 08/22/11				
D	ADDED CT'S & METERING; REVISED GEN TIE; REVISED INTERCONNECT VOLTAGE 02/08/12				
E	EXPANDED DETAILS OF SWITCHYARD, SWITCHGEAR & LOAD CENTERS 02/10/12				

Drawing Control

Purpose	Approved By	Date	Released By	Date
For Information				
For Comment				
For Bid				
For Construction				

Engineering Review

Disc	Engr	Date
Mech		
Elec		
Civil		
Arch		
I & C		

Dwn HPK | ChKd | SI

Reviewed By

Mgr – Drafting & Design

App'd for Construction

Chief Engineer

Cogentrix

QUAIL BRUSH
KEY ONE-LINE DIAGRAM

Date 03/14/11 | Scale | WorK Order | Drawing No. QBPP-E001 | Rev E

ATTACHMENT B
QUAIL BRUSH SWITCHYARD LAYOUT

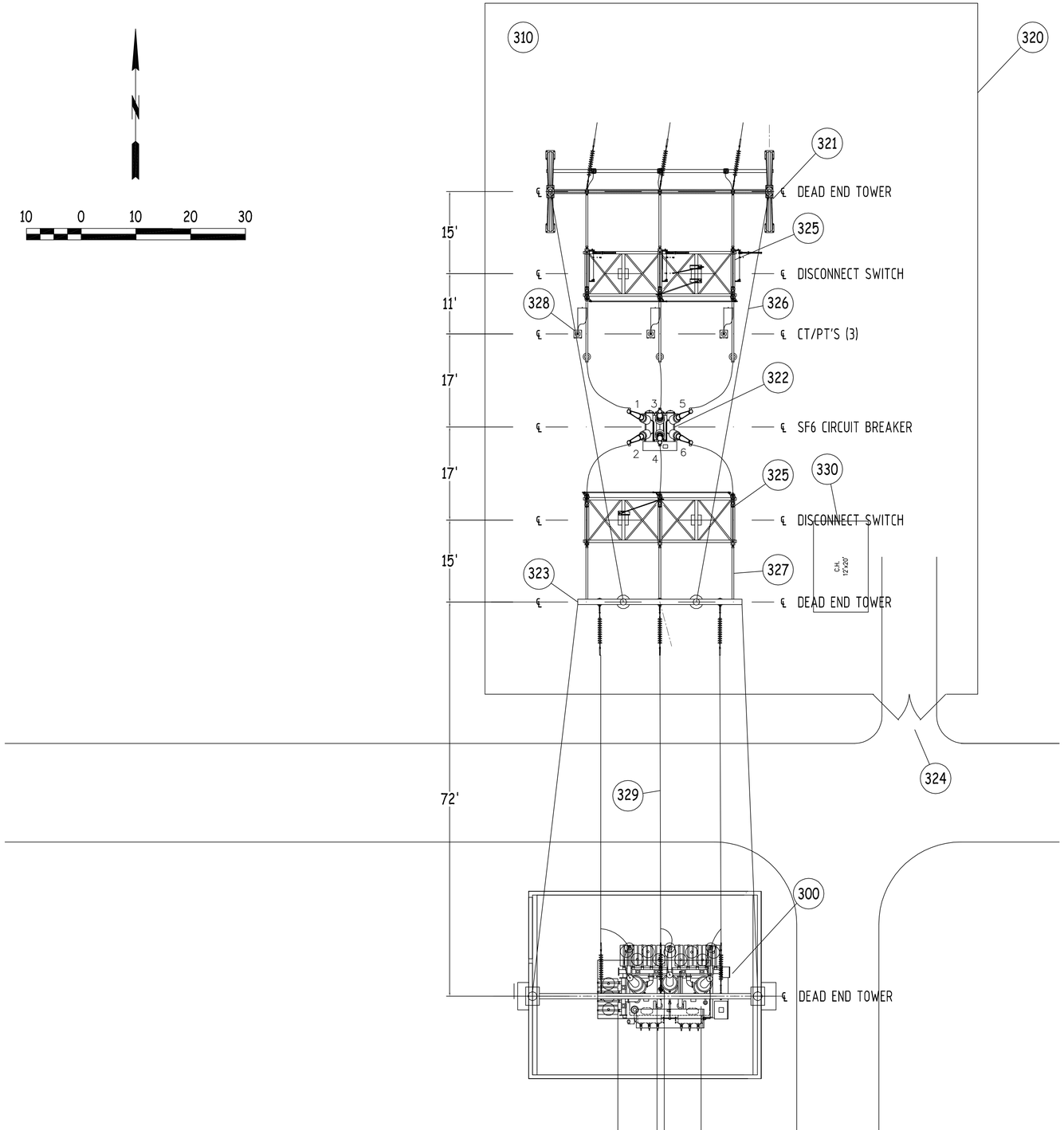

138 KV FACILITY SWITCHYARD

NO.	QTY.	DESCRIPTION
300	1	138/13.8 kV Generator Step-Up Transformer (GSUT)
310	1	Facility 138 kV Switchyard
320	1	Switchyard Fence
321	1	138 kV Dead End Structure, Outgoing Line
322	1	145 kV SF6 Circuit Breaker
323	2	13.8 kV Dead End Structure
324	1	Gate
325	2	Three Pole High Voltage Air Break Disconnect Switch
326	4	Overhead Static Line
327	6	Air Insulated Aluminum Tubular Bus and Supports
328	3	CT/PT Unit
329	6	477 kcmil ACSS Conductor (Hawk)
330	1	Switchyard Control House

REFERENCE DRAWINGS

QB-SP-2 Quail Brush Master Layout Plan

Rev No	Revision	Date	Dwn	Chkd	Approved Chief Engr
A	Initial Issue				

Drawing Control				
Purpose	Approved By	Date	Released By	Date
For Information				
For Comment				
For Bid				
For Construction				

Engineering Review		
Disc	Engr	Date
Mech		
Elec		
Civil		
Arch		
I & C		
Dwn VV	Chkd	SI

Reviewed By

Mgr – Drafting & Design

App'd for Construction

Chief Engineer

Cogentrix

Quail Brush
Switchyard Layout

Date	Work Order	Drawing No.	Rev
3/1/12		QB-SP-3	A

Scale

ATTACHMENT C
TYPICAL A FRAME STRUCTURE

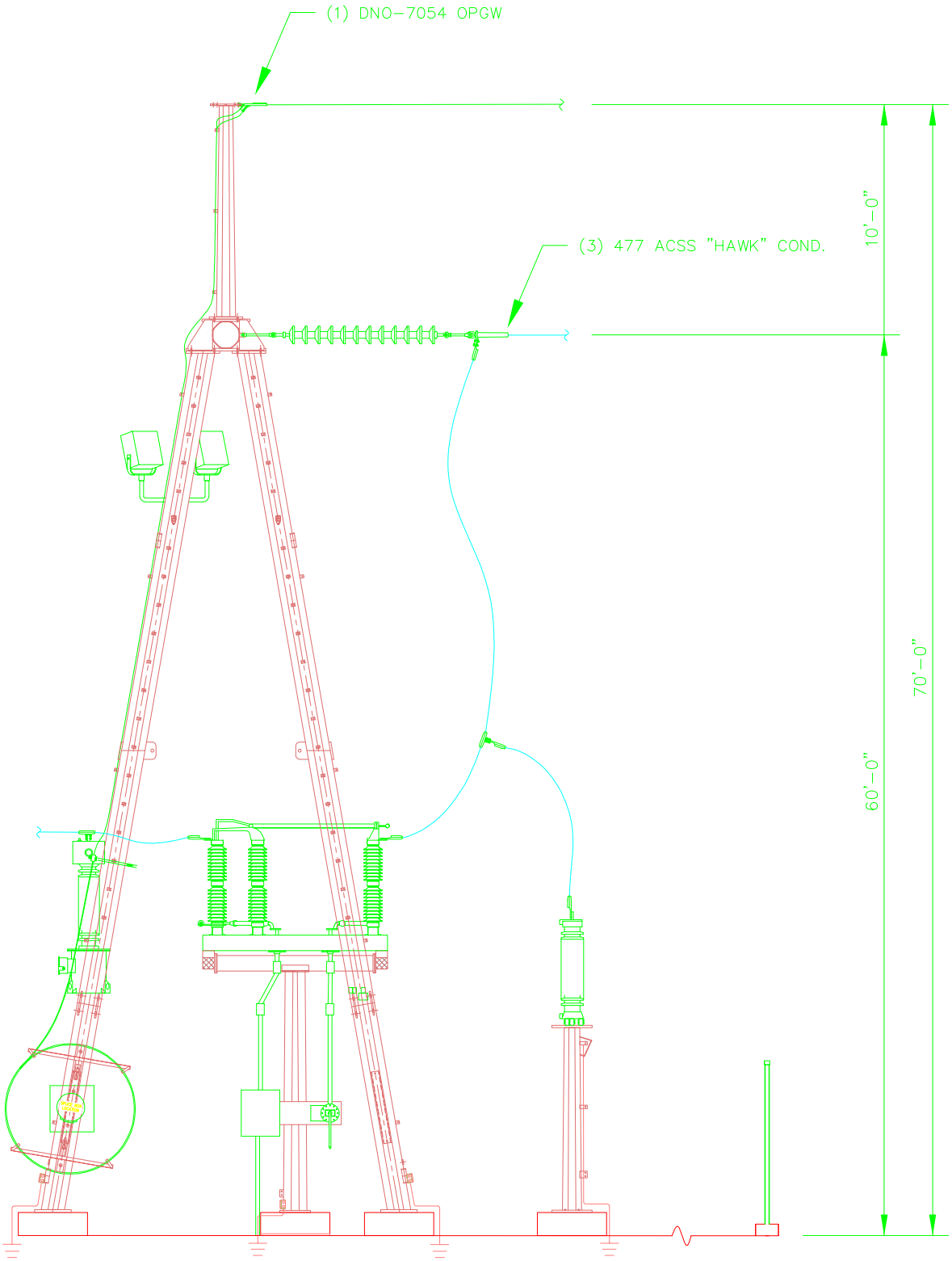

QUAIL BRUSH A-FRAME DE

REV. NO.	DATE	DESCRIPTION	BY	CKD.	APV'D.
A	09-23-08	ISSUED FOR APPROVAL	MDB	KMT	MRS

REVISIONS

AMPIRICAL ENGINEER
NAME: KURT TRAUB
PHONE: 985-809-5278

DRN: MDB	
DSN:	
CKD:	
STAMPED BY:	
REGISTRATION NO:	
STATE:	
CAD FILENAME:	
CLIENT CHARGE NO:	

PROPRIETARY

This Drawing is the property of Ampirical Solutions LLC and contains proprietary and confidential information which must not be duplicated, used or disclosed other than expressly authorized by Ampirical Solutions LLC.

AMPIRICAL SOLUTIONS LLC

QUAIL BRUSH - CARLTON HILLS
138kV TRANSMISSION LINE
STRUCTURE DRAWING

SCALE:	DRAWING NO:	REV.	SHEET
NONE	A-FRAME DE	1	1 OF 1

ATTACHMENT D
PREFERRED ROUTE

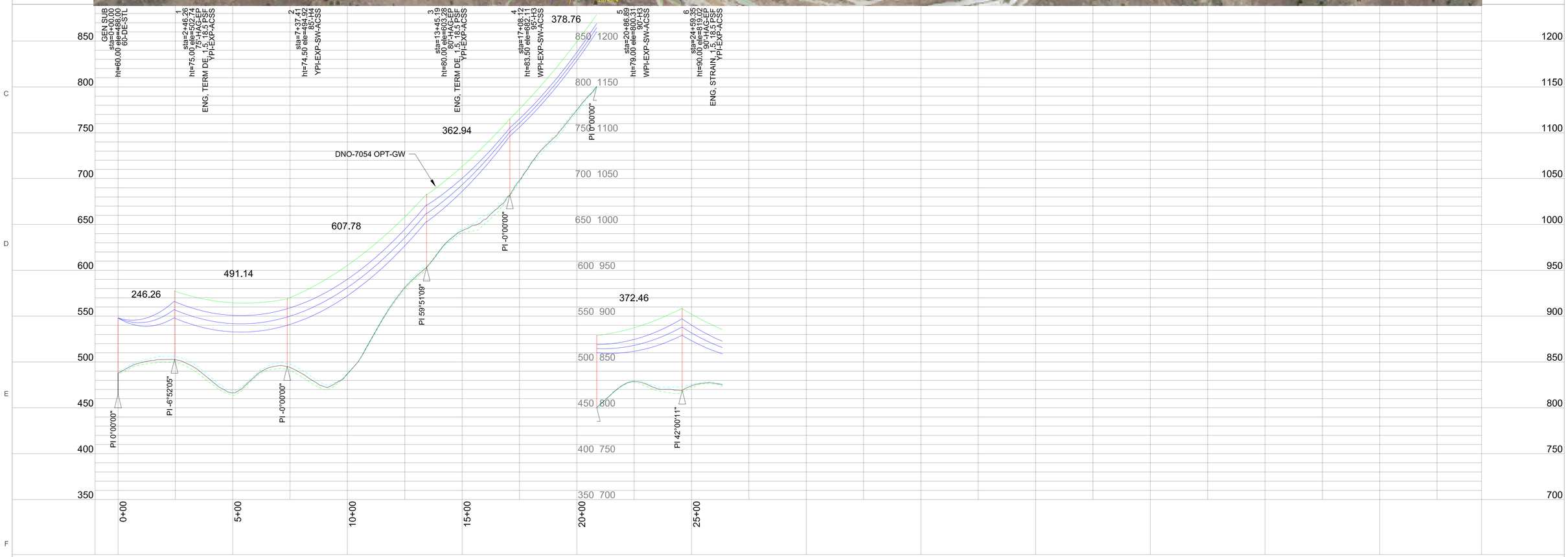

PRELIMINARY

NOTES:

200.0 ft. Horiz. Scale

50.0 ft. Vert. Scale

North

REV. NO.	DATE	DESCRIPTION	BY	CKD.	APVD.

REVISIONS

PROPRIETARY NOTICE

DRN:
DSN:
CKD:
ENG'D:
STAMPED BY:
REGISTRATION NO:
STATE:
C.O.A.:
STATE:

AMPIRICAL SOLUTIONS LLC
661 RIVER HIGHLANDS BLVD, COVINGTON, LA 70433
PHONE: (985) 809-5240, FAX: (985) 809-5250

QUAIL BRUSH - CARLTON HILLS
138kV TRANSMISSION LINE
PREFERRED ROUTE

SCALE: | DRAWING NO: QB138-PRE | SHEET 1 of 2

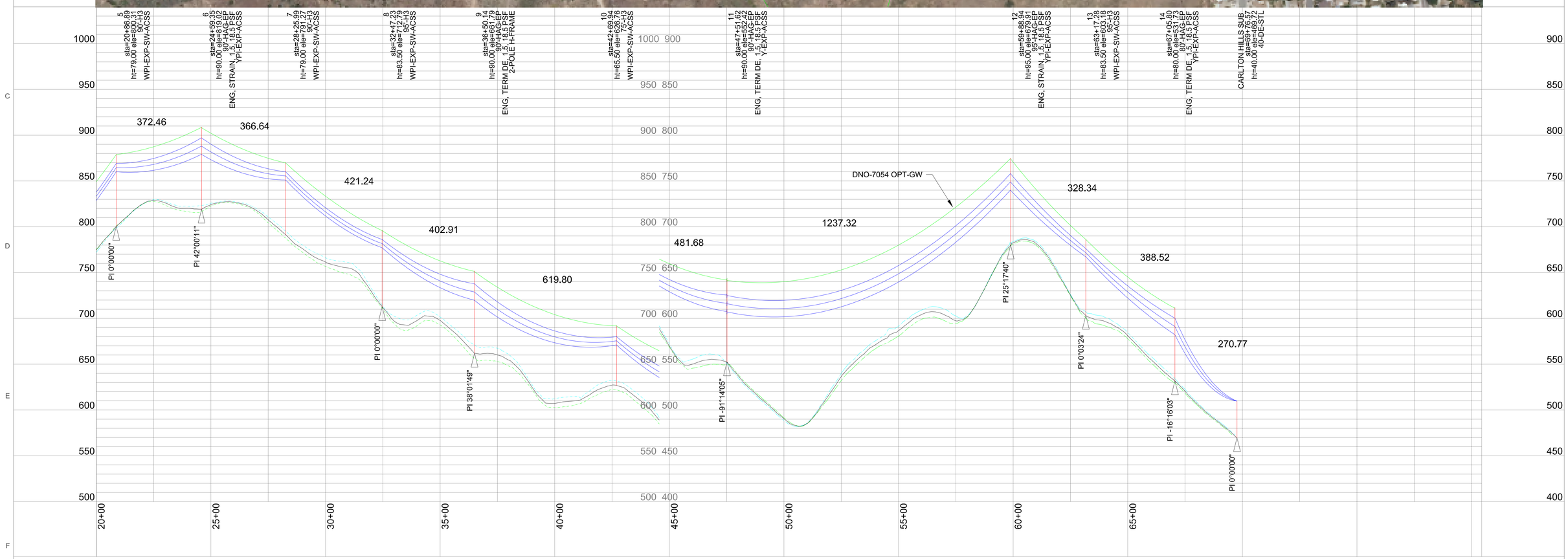

PRELIMINARY

NOTES:

200.0 ft. Horiz. Scale

50.0 ft. Vert. Scale

North

REV. NO.	DATE	DESCRIPTION	BY	CKD.	APVD.

REVISIONS

PROPRIETARY NOTICE

DRN:
DSN:
CKD:
ENG'D:
STAMPED BY:
REGISTRATION NO:
STATE:
C.O.A.:
STATE:

AMPIRICAL SOLUTIONS LLC
661 RIVER HIGHLANDS BLVD, COVINGTON, LA 70433
PHONE: (985) 809-5240, FAX: (985) 809-5250

QUAIL BRUSH - CARLTON HILLS
138kV TRANSMISSION LINE
PREFERRED ROUTE

SCALE: | DRAWING NO: QB138-PRE | SHEET 2 of 2

ATTACHMENT E
ALTERNATIVE 2A ROUTE

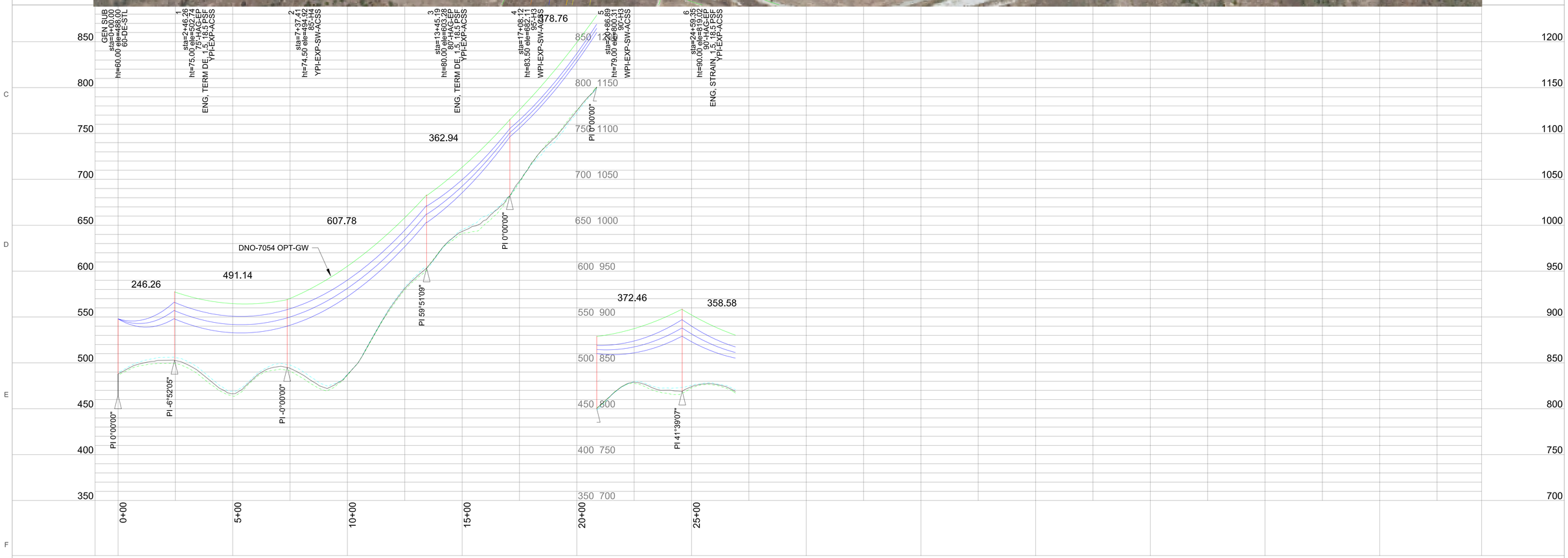

PRELIMINARY

NOTES:

200.0 ft. Horiz. Scale

50.0 ft. Vert. Scale

North

REV. NO.	DATE	DESCRIPTION	BY	CKD.	APVD.

REVISIONS

PROPRIETARY NOTICE

DRN:
DSN:
CKD:
ENG'D:
STAMPED BY:
REGISTRATION NO:
STATE:
C.O.A.:
STATE:

AMPIRICAL SOLUTIONS LLC
661 RIVER HIGHLANDS BLVD, COVINGTON, LA 70433
PHONE: (985) 809-5240, FAX: (985) 809-5250

QUAIL BRUSH - CARLTON HILLS
138kV TRANSMISSION LINE
ALTERNATE ROUTE 2a

SCALE: | DRAWING NO: QB138-ALT 2a | SHEET 1 of 2

PLS-CADD Drawing

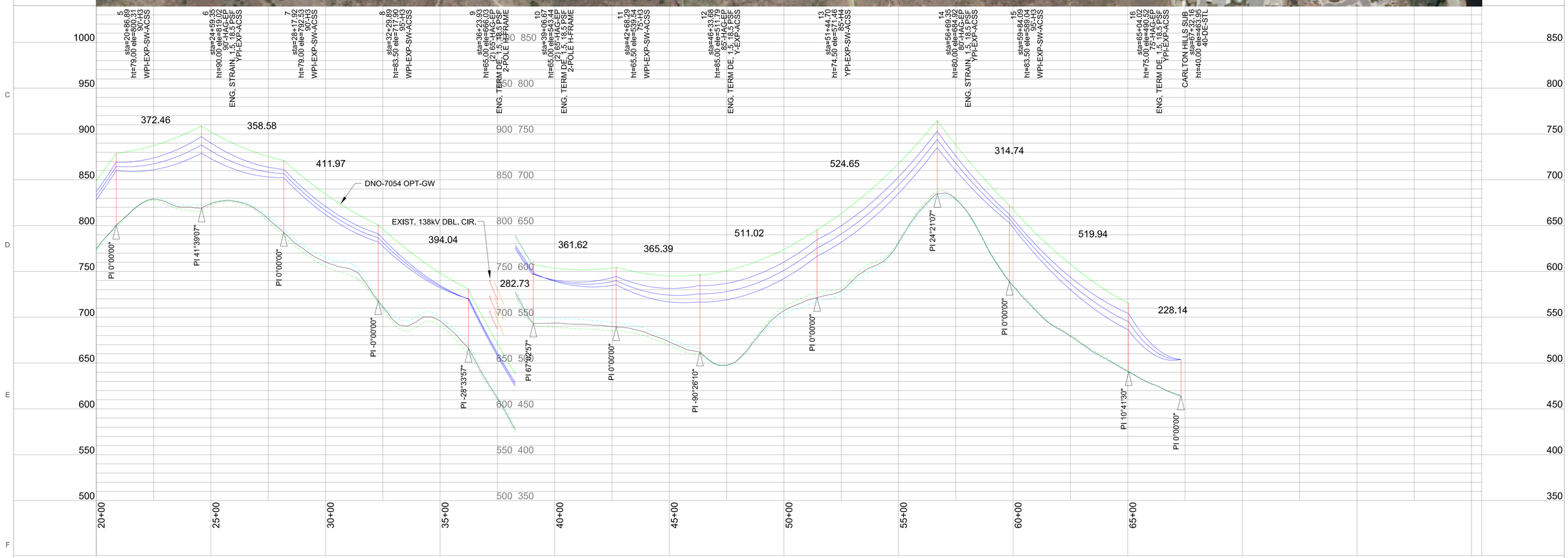

PRELIMINARY

NOTES:

200.0 ft. Horiz. Scale

50.0 ft. Vert. Scale

North

REV. NO.	DATE	DESCRIPTION	BY	CKD.	APVD.

REVISIONS

PROPRIETARY NOTICE

DRN:
DSN:
CKD:
ENG'D:
STAMPED BY:
REGISTRATION NO:
STATE:
C.O.A.:
STATE:

AMPIRICAL SOLUTIONS LLC
661 RIVER HIGHLANDS BLVD, COVINGTON, LA 70433
PHONE: (985) 809-5240, FAX: (985) 809-5250

QUAIL BRUSH - CARLTON HILLS
138kV TRANSMISSION LINE
ALTERNATE ROUTE 2a

SCALE: | DRAWING NO: QB138-ALT 2a | SHEET 2 of 2

ATTACHMENT F
ALTERNATIVE 2B ROUTE

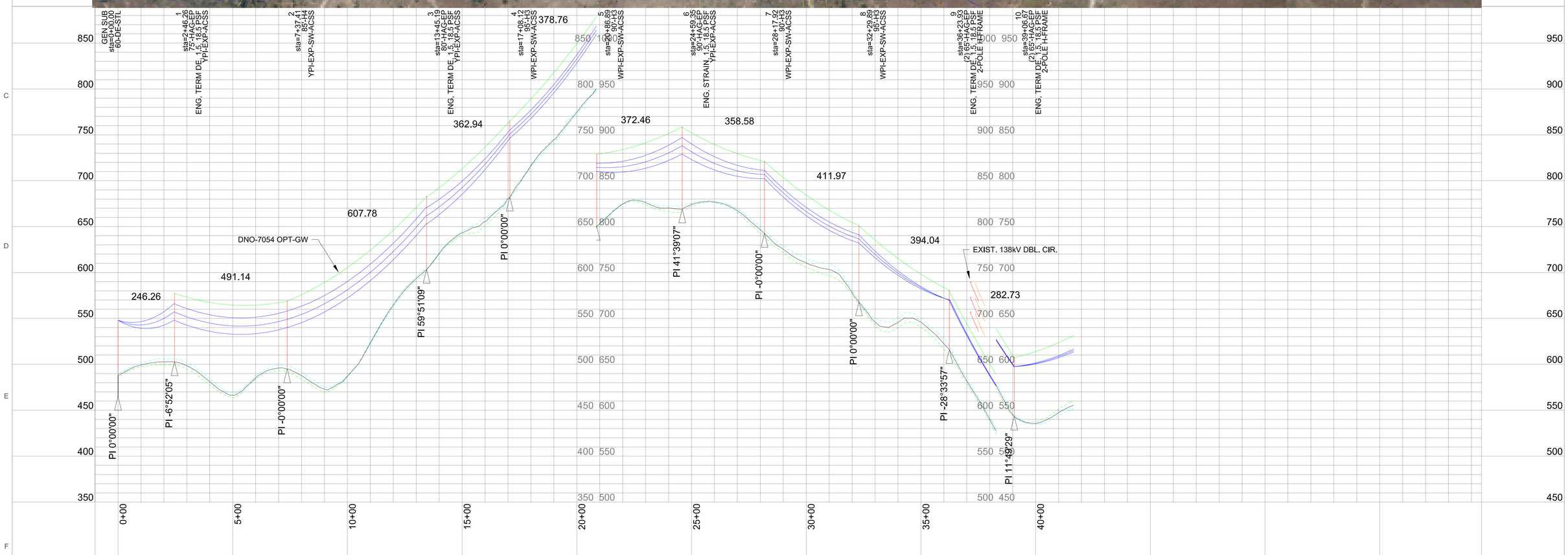

PRELIMINARY

NOTES:

200.0 ft. Horiz. Scale

50.0 ft. Vert. Scale

North

REV. NO.	DATE	DESCRIPTION	BY	CKD.	APVD.

REVISIONS

PROPRIETARY NOTICE

DRN:
DSN:
CKD:
ENG'D:
STAMPED BY:
REGISTRATION NO:
STATE:
C.O.A.:
STATE:

AMPIRICAL SOLUTIONS LLC
661 RIVER HIGHLANDS BLVD, COVINGTON, LA 70433
PHONE: (985) 809-5240, FAX: (985) 809-5250

QUAIL BRUSH - CARLTON HILLS
138kV TRANSMISSION LINE
ALTERNATE ROUTE 2b

SCALE: | DRAWING NO: QB138-ALT 2b | SHEET 1 of 2

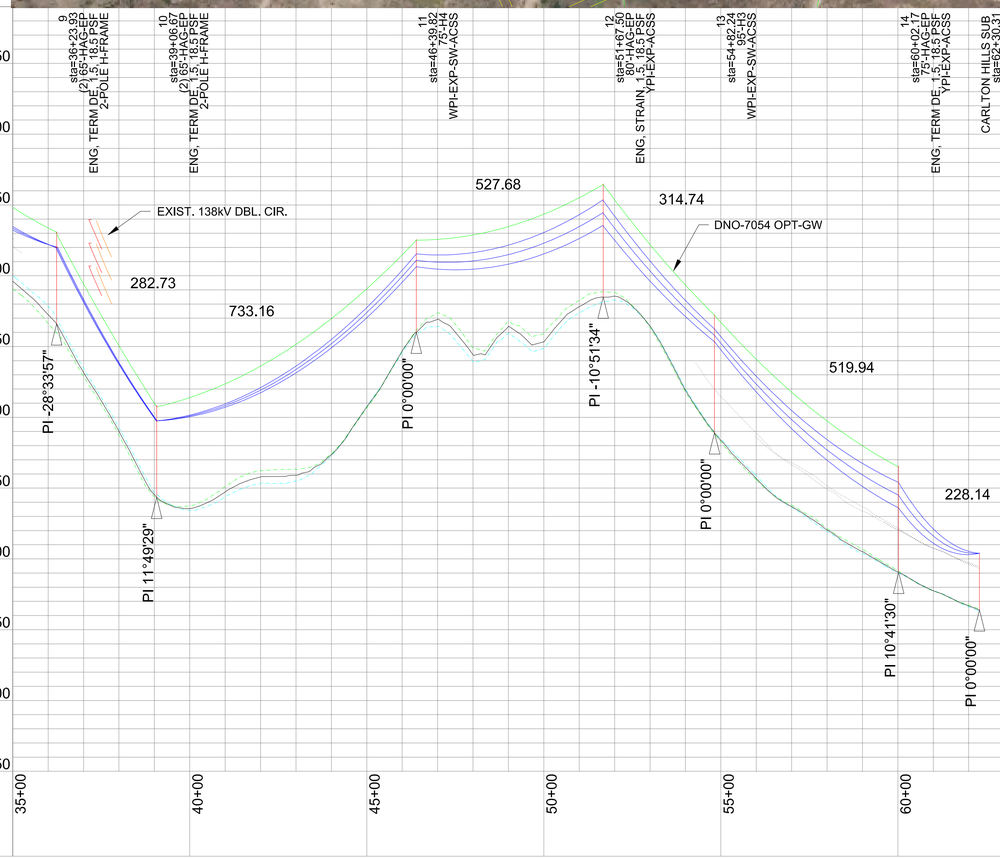

PRELIMINARY

NOTES:

200.0 ft. Horiz. Scale

50.0 ft. Vert. Scale

North

REV. NO.	DATE	DESCRIPTION	BY	CKD.	APVD.

REVISIONS

PROPRIETARY NOTICE

DRN:
DSN:
CKD:
ENG'D:
STAMPED BY:
REGISTRATION NO:
STATE:
C.O.A.:
STATE:

AMPIRICAL SOLUTIONS LLC
661 RIVER HIGHLANDS BLVD, COVINGTON, LA 70433
PHONE: (985) 809-5240, FAX: (985) 809-5250

QUAIL BRUSH - CARLTON HILLS
138kV TRANSMISSION LINE
ALTERNATE ROUTE 2b

SCALE: | DRAWING NO: QB138-ALT 2b | SHEET 2 of 2

ATTACHMENT G
PREFERRED ROUTE

STRUCTURE LIST				
STR. #	H.A.G.	DIM. "A"	DIM. "B"	DIM. "C"
4	83'-6"	11'-6"	63'-0"	11'-6"
5	79'-0"	11'-6"	58'-6"	11'-0"
7	79'-0"	11'-6"	58'-6"	11'-0"
8	83'-6"	11'-6"	63'-0"	11'-6"
10	65'-6"	13'-6"	43'-0"	9'-6"
13	83'-6"	11'-6"	63'-0"	11'-6"

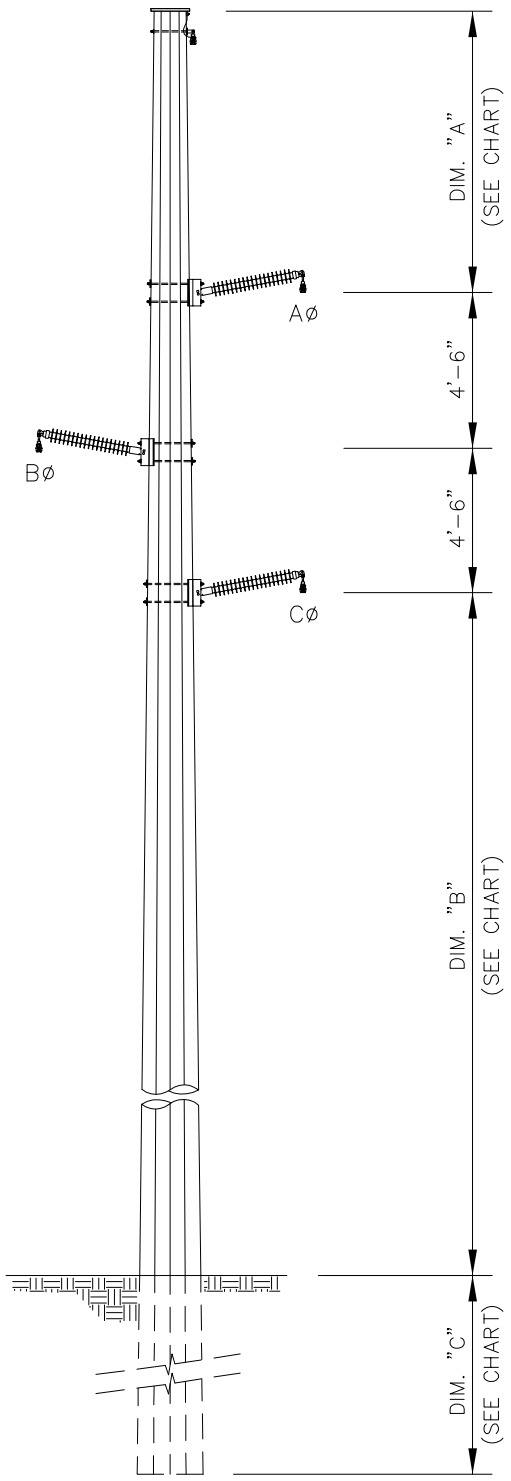

WPI-EXP-SW

LEGEND:

H.A.G. (HEIGHT ABOVE GROUND)

REV. NO.	DATE	DESCRIPTION	BY	CKD.	APV'D.
A	09-23-08	ISSUED FOR APPROVAL	MDB	KMT	MRS

REVISIONS

AMPIRICAL ENGINEER
NAME: KURT TRAUB
PHONE: 985-809-5278

DRN: MDB
DSN:
CKD:
STAMPED BY:
CAD FILENAME:
REGISTRATION NO:
CLIENT CHARGE NO:
STATE:

PROPRIETARY

This Drawing is the property of Ampirical Solutions LLC and contains proprietary and confidential information which must not be duplicated, used or disclosed other than expressly authorized by Ampirical Solutions LLC.

AMPIRICAL SOLUTIONS LLC

QUAIL BRUSH - CARLTON HILLS
138kV TRANSMISSION LINE
PREFERRED ROUTE

SCALE:	DRAWING NO:	REV.	SHEET
NONE	WPI-EXP-SW-1	1	1 OF 1

STRUCTURE LIST		
STR. #	H.A.G.	DIM. "A"
11	90'-0"	T.B.D.

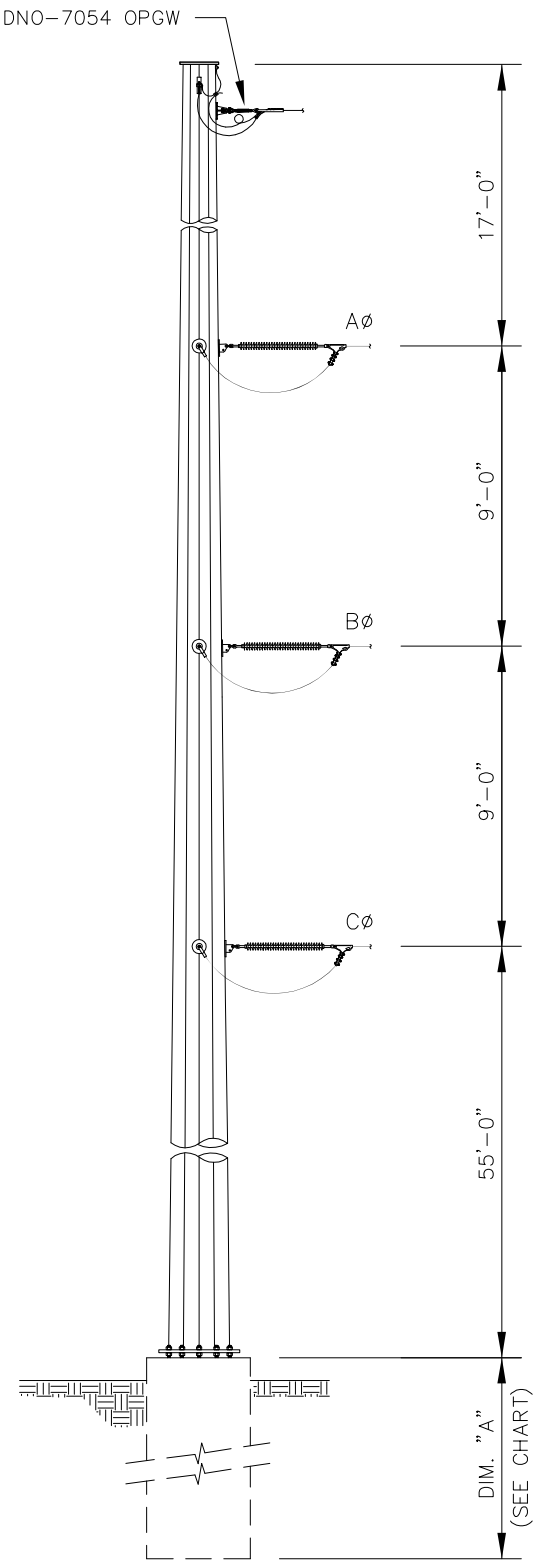

Y-EXP-EP

LEGEND:

H.A.G. (HEIGHT ABOVE GROUND)
T.B.D. (TO BE DETERMINED)

REV. NO.	DATE	DESCRIPTION	BY	CKD.	APV'D.
A	09-23-08	ISSUED FOR APPROVAL	MDB	KMT	MRS

REVISIONS

AMPIRICAL ENGINEER
NAME: KURT TRAUB
PHONE: 985-809-5278

DRN: MDB	
DSN:	
CKD:	
STAMPED BY:	
CAD FILENAME:	REGISTRATION NO:
CLIENT CHARGE NO:	STATE:

PROPRIETARY

This Drawing is the property of Ampirical Solutions LLC and contains proprietary and confidential information which must not be duplicated, used or disclosed other than expressly authorized by Ampirical Solutions LLC.

AMPIRICAL SOLUTIONS LLC

QUAIL BRUSH - CARLTON HILLS
138kV TRANSMISSION LINE
PREFERRED ROUTE

SCALE:	DRAWING NO:	REV.	SHEET
NONE	Y-EXP-EP-1	1	1 OF 1

STRUCTURE LIST				
STR. #	H.A.G.	DIM. "A"	DIM. "B"	DIM. "C"
1	75'-0"	11'-6"	45'-5"	T.B.D.
3	80'-0"	11'-6"	50'-6"	T.B.D.
6	90'-0"	11'-6"	59'-6"	T.B.D.
9	90'-0"	14'-0"	57'-0"	T.B.D.
12	95'-0"	17'-0"	60'-0"	T.B.D.
14	80'-0"	11'-6"	50'-6"	T.B.D.

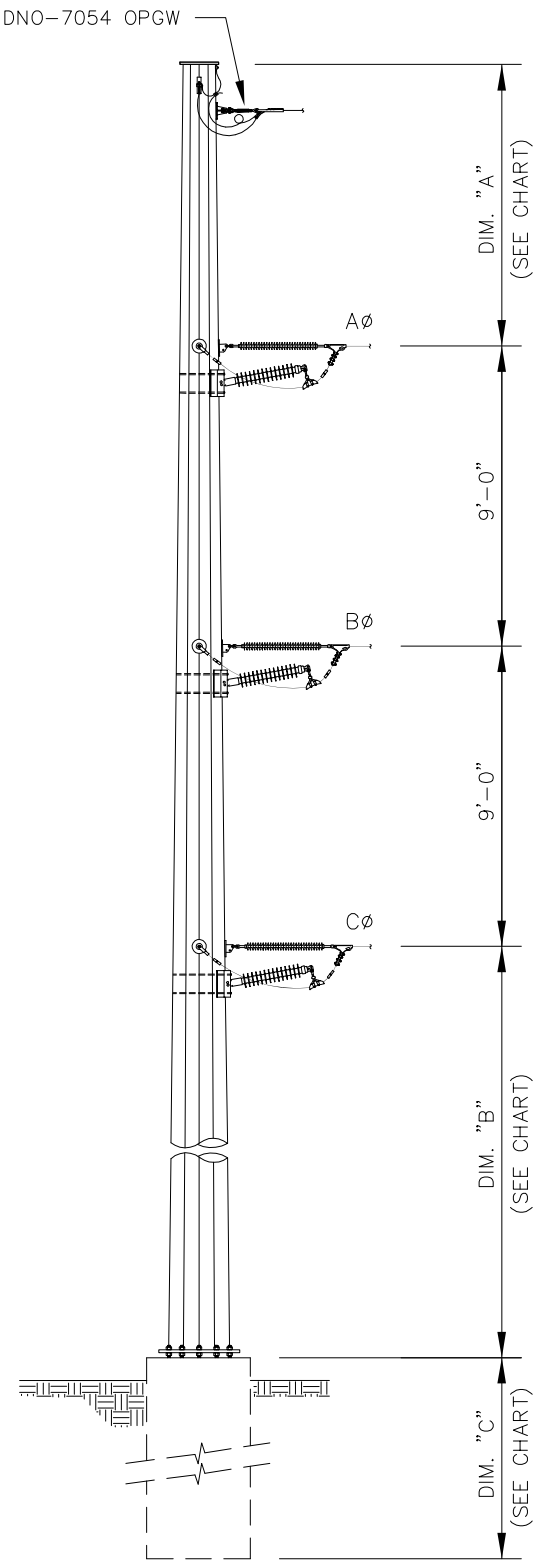

YPI-EXP-EP

LEGEND:

H.A.G. (HEIGHT ABOVE GROUND)
T.B.D. (TO BE DETERMINED)

REV. NO.	DATE	DESCRIPTION	BY	CKD.	APV'D.
A	09-23-08	ISSUED FOR APPROVAL	MDB	KMT	MRS

REVISIONS

AMPIRICAL ENGINEER
NAME: KURT TRAUB
PHONE: 985-809-5278
CAD FILENAME:
CLIENT CHARGE NO:

DRN: MDB
DSN:
CKD:
STAMPED BY:
REGISTRATION NO:
STATE:

PROPRIETARY

This Drawing is the property of Ampirical Solutions LLC and contains proprietary and confidential information which must not be duplicated, used or disclosed other than expressly authorized by Ampirical Solutions LLC.

AMPIRICAL SOLUTIONS LLC

QUAIL BRUSH - CARLTON HILLS
138kV TRANSMISSION LINE
PREFERRED ROUTE

SCALE:	DRAWING NO:	REV.	SHEET
NONE	YPI-EXP-EP-1	1	1 OF 1

STRUCTURE LIST			
STR. #	H.A.G.	DIM. "A"	DIM. "B"
2	74'-6"	44'-6"	10'-6"

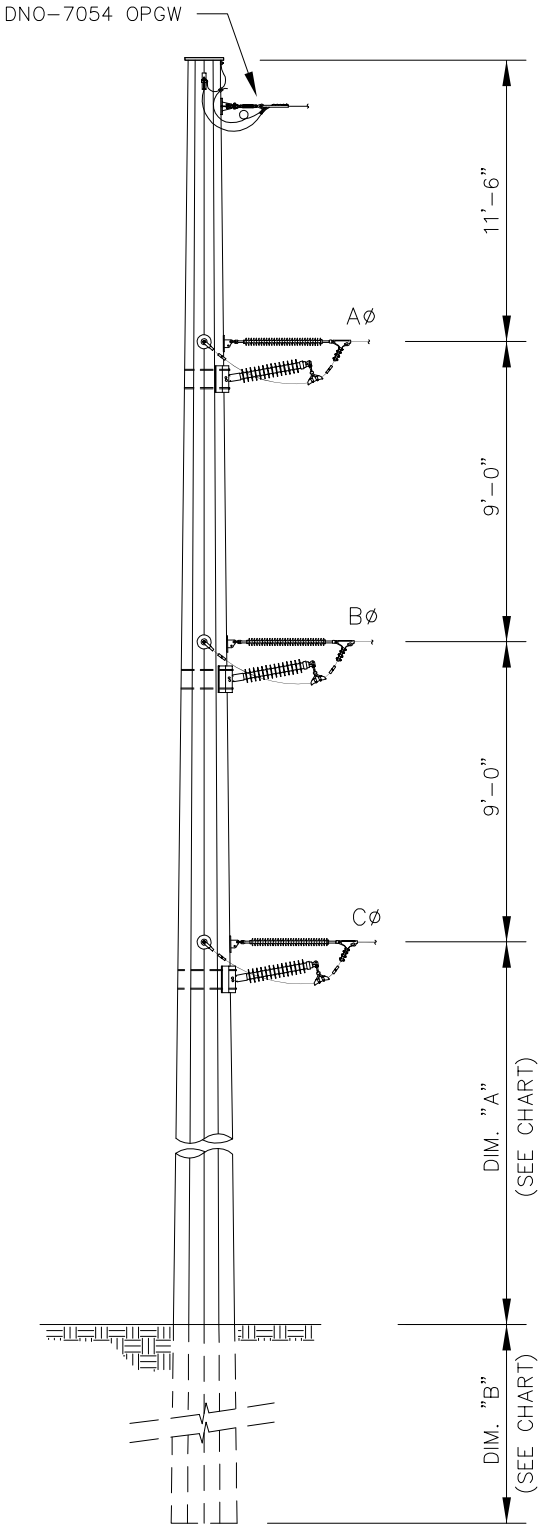

YPI-EXP-SW

LEGEND:

H.A.G. (HEIGHT ABOVE GROUND)

REV. NO.	DATE	DESCRIPTION	BY	CKD.	APV'D.
A	09-23-08	ISSUED FOR APPROVAL	MDB	KMT	MRS

REVISIONS

AMPIRICAL ENGINEER
NAME: KURT TRAUB
PHONE: 985-809-5278

DRN: MDB	
DSN:	
CKD:	
STAMPED BY:	
CAD FILENAME:	REGISTRATION NO:
CLIENT CHARGE NO:	STATE:

PROPRIETARY

This Drawing is the property of Ampirical Solutions LLC and contains proprietary and confidential information which must not be duplicated, used or disclosed other than expressly authorized by Ampirical Solutions LLC.

AMPIRICAL SOLUTIONS LLC

QUAIL BRUSH - CARLTON HILLS
138kV TRANSMISSION LINE
PREFERRED ROUTE

SCALE:	DRAWING NO:	REV.	SHEET
NONE	YPI-EXP-SW-1	1	1 OF 1

ATTACHMENT H
ALTERNATIVE 2A ROUTE DETAIL SHEETS

STRUCTURE LIST			
STR. #	H.A.G.	DIM. "A"	DIM. "B"
4	83'-6"	63'-0"	11'-6"
5	79'-0"	58'-6"	11'-0"
7	79'-0"	58'-6"	11'-0"
8	83'-6"	63'-0"	11'-6"
11	65'-6"	45'-0"	9'-6"
15	83'-6"	63'-0"	11'-6"

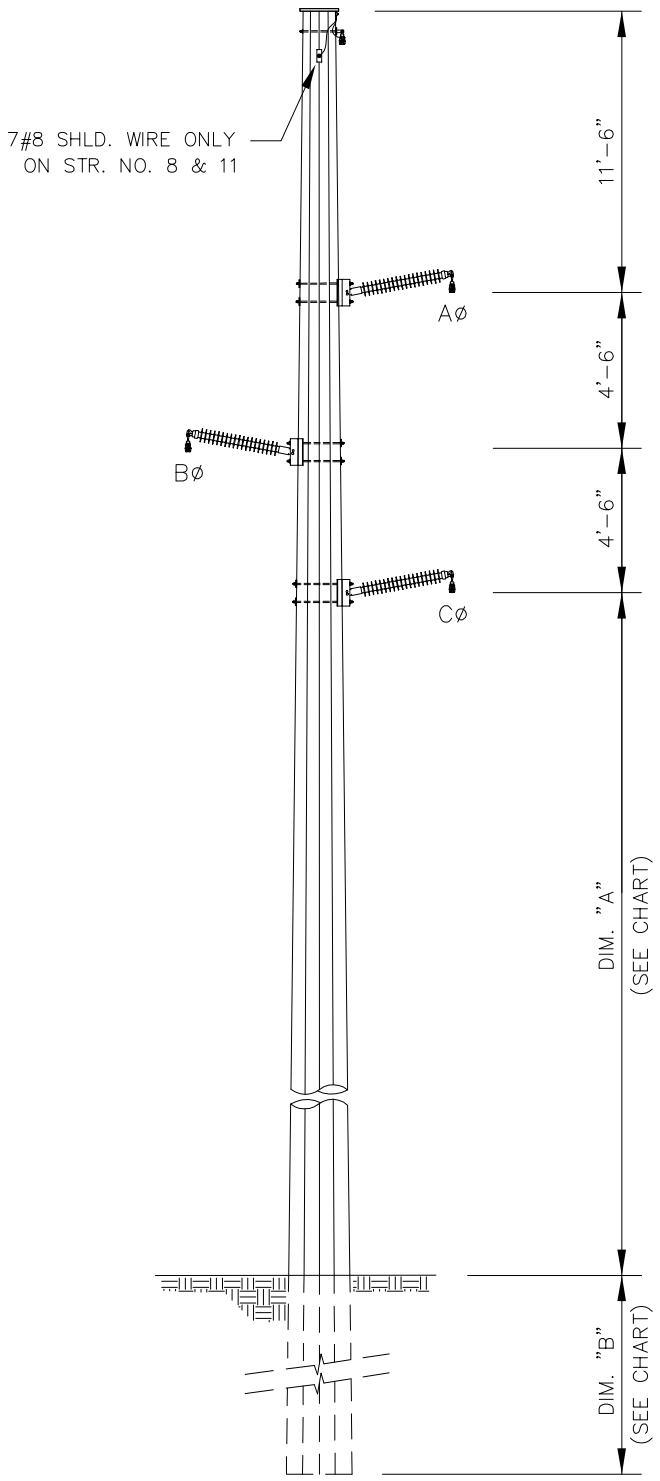

WPI-EXP-SW

LEGEND:

H.A.G. (HEIGHT ABOVE GROUND)

REV. NO.	DATE	DESCRIPTION	BY	CKD.	APV'D.
A	09-23-08	ISSUED FOR APPROVAL	MDB	KMT	MRS

REVISIONS

AMPIRICAL ENGINEER
NAME: KURT TRAUB
PHONE: 985-809-5278

DRN: MDB	
DSN:	
CKD:	
STAMPED BY:	
CAD FILENAME:	REGISTRATION NO:
CLIENT CHARGE NO:	STATE:

PROPRIETARY

This Drawing is the property of Ampirical Solutions LLC and contains proprietary and confidential information which must not be duplicated, used or disclosed other than expressly authorized by Ampirical Solutions LLC.

AMPIRICAL SOLUTIONS LLC

QUAIL BRUSH - CARLTON HILLS
138kV TRANSMISSION LINE
ALTERNATE ROUTE 2a

SCALE:	DRAWING NO:	REV.	SHEET
NONE	WPI-EXP-SW-2a	1	1 OF 1

STRUCTURE LIST			
STR. #	H.A.G.	DIM. "A"	DIM. "B"
12	85'-0"	55'-0"	T.B.D.

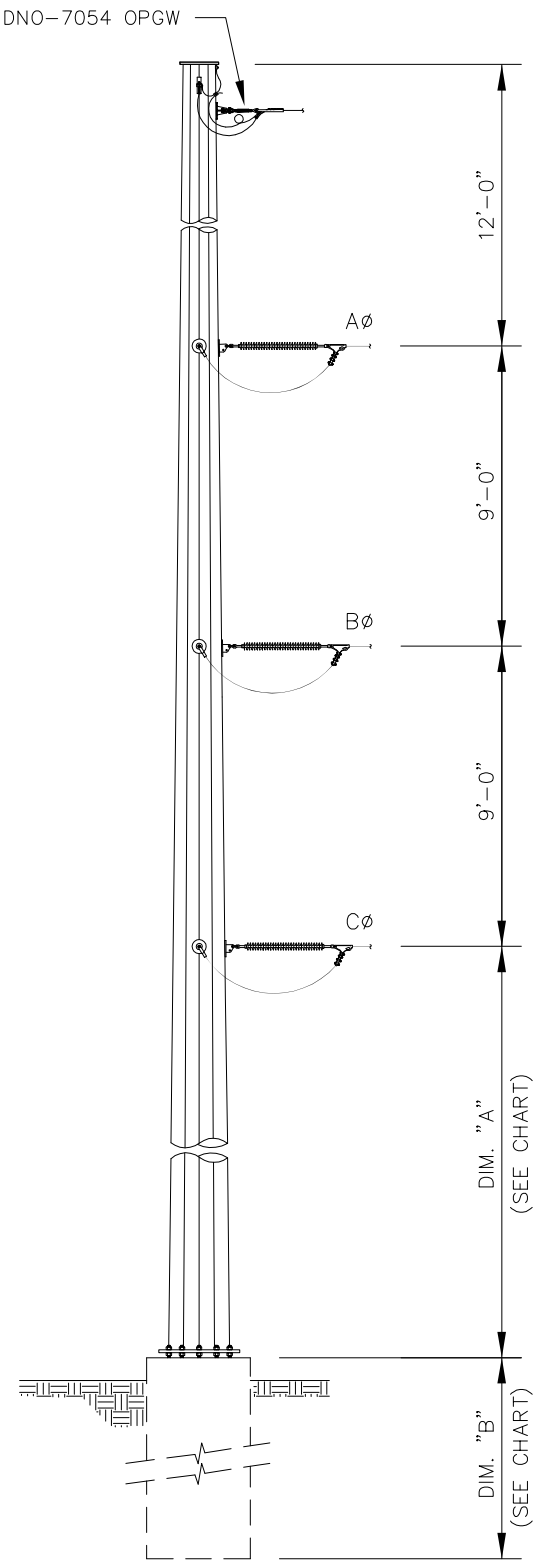

Y-EXP-EP

LEGEND:

H.A.G. (HEIGHT ABOVE GROUND)
T.B.D. (TO BE DETERMINED)

REV. NO.	DATE	DESCRIPTION	BY	CKD.	APV'D.
A	09-23-08	ISSUED FOR APPROVAL	MDB	KMT	MRS

REVISIONS

AMPIRICAL ENGINEER
NAME: KURT TRAUB
PHONE: 985-809-5278
CAD FILENAME:
CLIENT CHARGE NO:

DRN: MDB
DSN:
CKD:
STAMPED BY:
REGISTRATION NO:
STATE:

PROPRIETARY

This Drawing is the property of Ampirical Solutions LLC and contains proprietary and confidential information which must not be duplicated, used or disclosed other than expressly authorized by Ampirical Solutions LLC.

AMPIRICAL SOLUTIONS LLC

QUAIL BRUSH - CARLTON HILLS
138kV TRANSMISSION LINE
ALTERNATE ROUTE 2a

SCALE:	DRAWING NO:	REV.	SHEET
NONE	Y-EXP-EP-2a	1	1 OF 1

STRUCTURE LIST			
STR. #	H.A.G.	DIM. "A"	DIM. "B"
1	75'-0"	45'-6"	T.B.D.
3	80'-0"	50'-6"	T.B.D.
6	90'-0"	60'-6"	T.B.D.
14	80'-0"	50'-6"	T.B.D.
16	75'-0"	45'-6"	T.B.D.

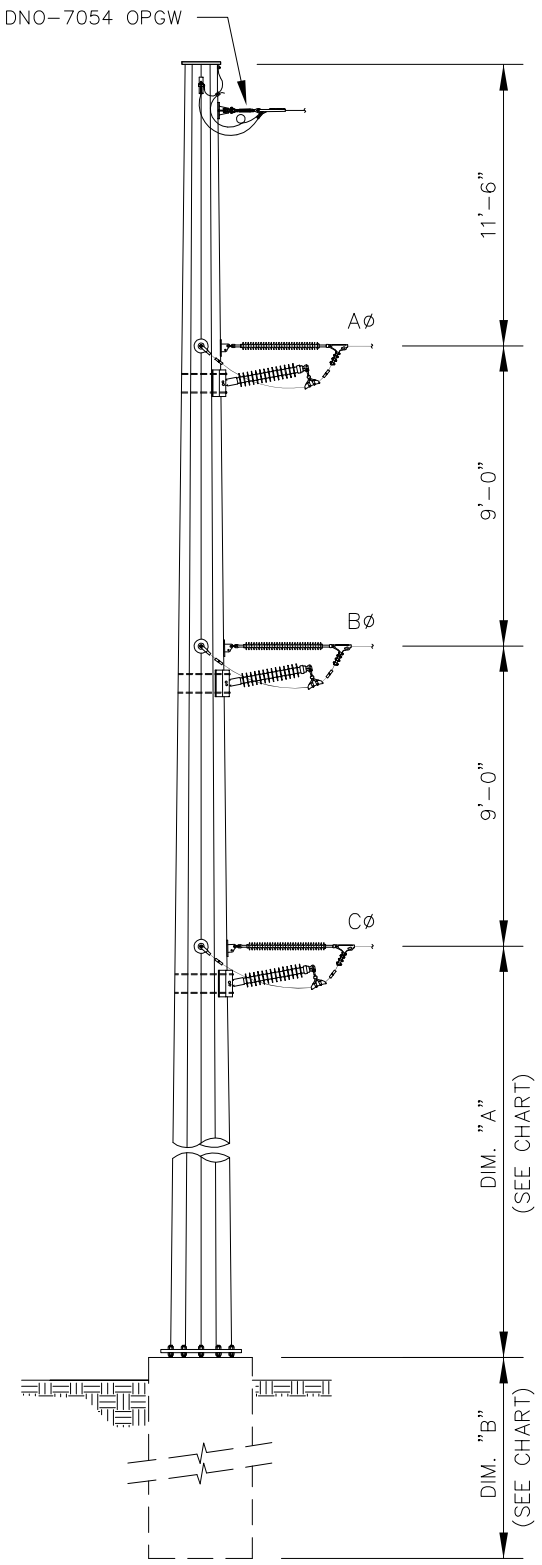

YPI-EXP-EP

LEGEND:

H.A.G. (HEIGHT ABOVE GROUND)
T.B.D. (TO BE DETERMINED)

REV. NO.	DATE	DESCRIPTION	BY	CKD.	APV'D.
A	09-23-08	ISSUED FOR APPROVAL	MDB	KMT	MRS

REVISIONS

AMPIRICAL ENGINEER
NAME: KURT TRAUB
PHONE: 985-809-5278

DRN: MDB
DSN:
CKD:
STAMPED BY:
CAD FILENAME:
REGISTRATION NO:
CLIENT CHARGE NO:
STATE:

PROPRIETARY

This Drawing is the property of Ampirical Solutions LLC and contains proprietary and confidential information which must not be duplicated, used or disclosed other than expressly authorized by Ampirical Solutions LLC.

AMPIRICAL SOLUTIONS LLC

QUAIL BRUSH - CARLTON HILLS
138kV TRANSMISSION LINE
ALTERNATE ROUTE 2a

SCALE:	DRAWING NO:	REV.	SHEET
NONE	YPI-EXP-EP-2a	1	1 OF 1

STRUCTURE LIST			
STR. #	H.A.G.	DIM. "A"	DIM. "B"
2	74'-6"	45'-0"	10'-6"
13	74'-6"	45'-0"	10'-6"

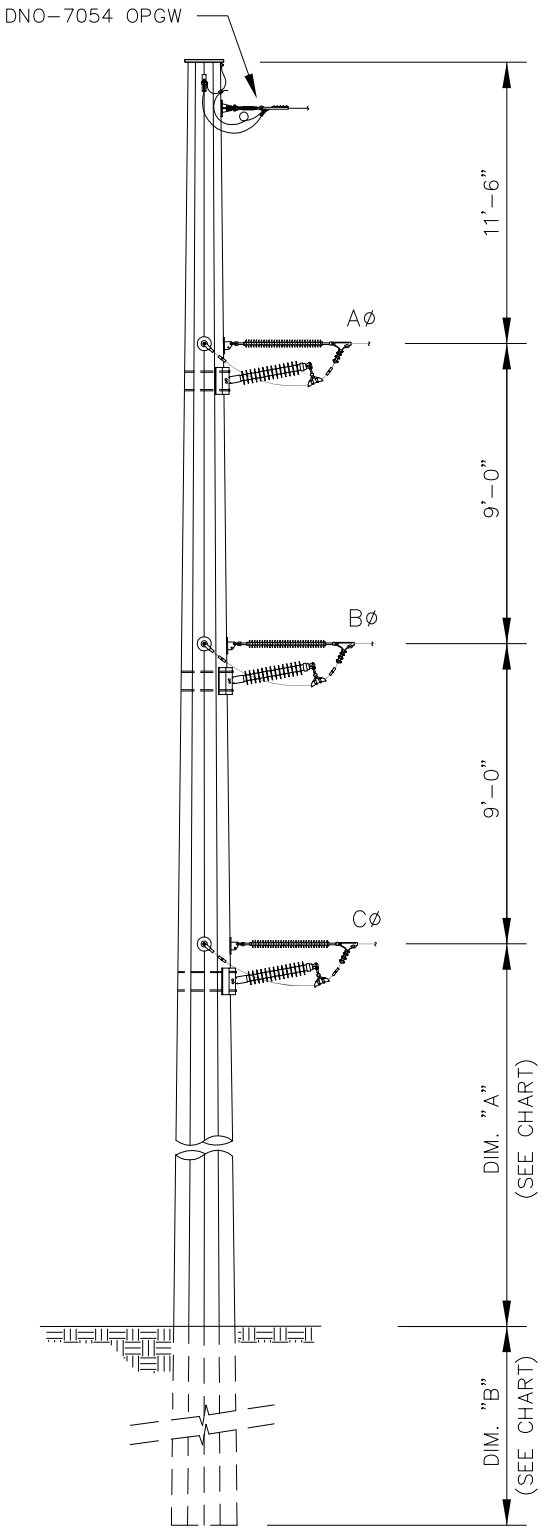

YPI-EXP-SW

LEGEND:

H.A.G. (HEIGHT ABOVE GROUND)

REV. NO.	DATE	DESCRIPTION	BY	CKD.	APV'D.
A	09-23-08	ISSUED FOR APPROVAL	MDB	KMT	MRS

REVISIONS

AMPIRICAL ENGINEER
NAME: KURT TRAUB
PHONE: 985-809-5278

	DRN: MDB
	DSN:
	CKD:
	STAMPED BY:
CAD FILENAME:	REGISTRATION NO:
CLIENT CHARGE NO:	STATE:

PROPRIETARY

This Drawing is the property of Ampirical Solutions LLC and contains proprietary and confidential information which must not be duplicated, used or disclosed other than expressly authorized by Ampirical Solutions LLC.

AMPIRICAL SOLUTIONS LLC

QUAIL BRUSH - CARLTON HILLS
138kV TRANSMISSION LINE
ALTERNATE ROUTE 2a

SCALE:	DRAWING NO:	REV.	SHEET
NONE	YPI-EXP-SW-2a	1	1 OF 1

ATTACHMENT I
H-FRAME DE

STRUCTURE LIST

STR. #	H.A.G.	DIM. "A"	DIM. "B"
9	65'-0"	53'-6"	T.B.D.
10	65'-0"	53'-6"	T.B.D.

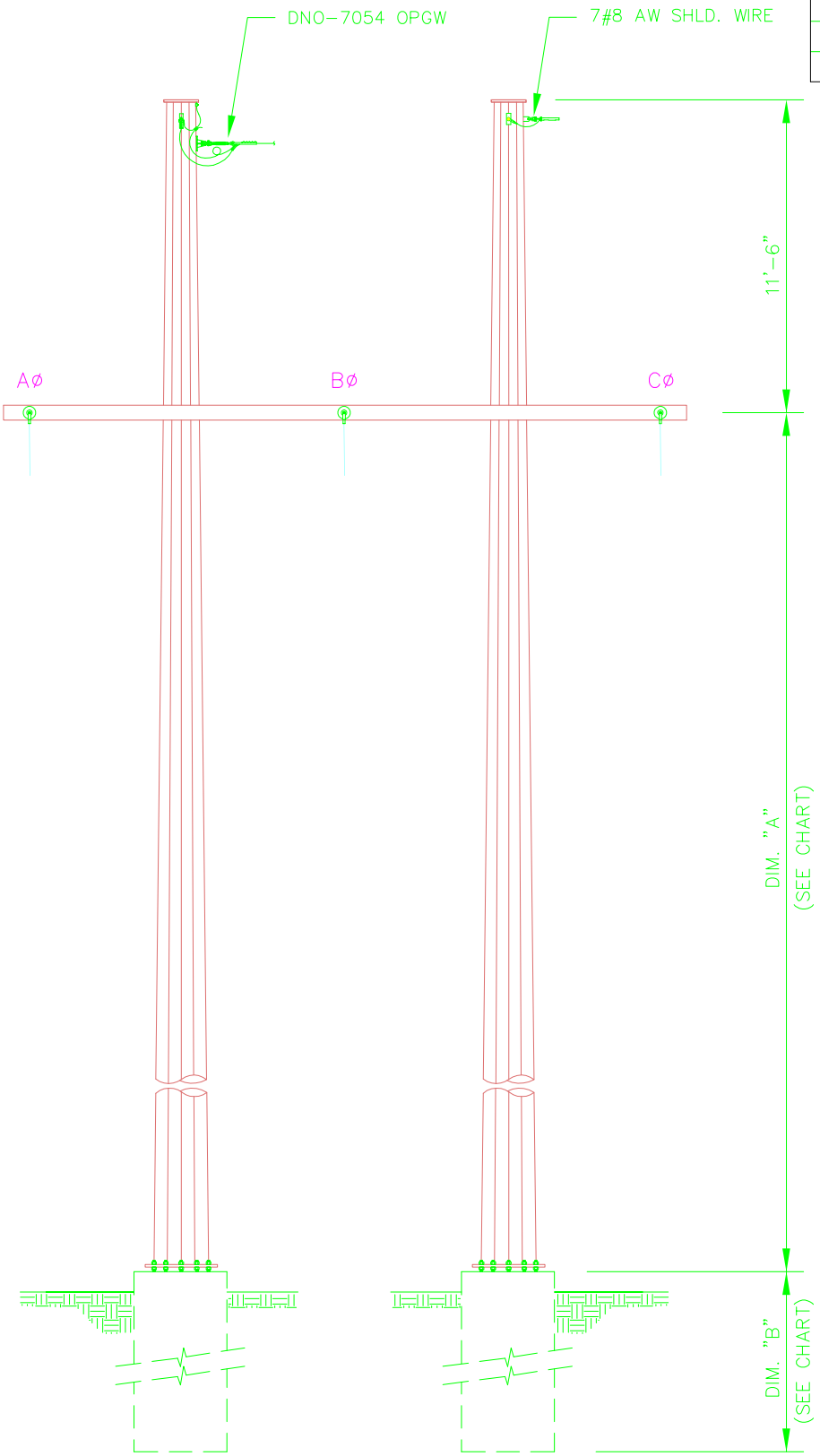

H-FRAME DE

LEGEND:

H.A.G. (HEIGHT ABOVE GROUND)
T.B.D. (TO BE DETERMINED)

REV. NO.	DATE	DESCRIPTION	BY	CKD.	APV'D.
A	09-23-08	ISSUED FOR APPROVAL	MDB	KMT	MRS

REVISIONS

AMPIRICAL ENGINEER
NAME: KURT TRAUB
PHONE: 985-809-5278

DRN: MDB	
DSN:	
CKD:	
STAMPED BY:	
CAD FILENAME:	REGISTRATION NO:
CLIENT CHARGE NO:	STATE:

PROPRIETARY

This Drawing is the property of Ampirical Solutions LLC and contains proprietary and confidential information which must not be duplicated, used or disclosed other than expressly authorized by Ampirical Solutions LLC.

AMPIRICAL SOLUTIONS LLC

QUAIL BRUSH - CARLTON HILLS
138kV TRANSMISSION LINE
ALTERNATE ROUTE 2a & 2b

SCALE:	DRAWING NO:	REV.	SHEET
NONE	H-FRAME DE	1	1 OF 1

ATTACHMENT J
ALTERNATIVE 2B ROUTE DETAIL SHEETS

STRUCTURE LIST				
STR. #	H.A.G.	DIM. "A"	DIM. "B"	DIM. "C"
4	83'-6"	11'-6"	63'-0"	11'-6"
5	79'-0"	11'-6"	58'-6"	11'-0"
7	79'-0"	11'-6"	58'-6"	11'-0"
8	83'-6"	11'-6"	63'-0"	11'-6"
11	70'-0"	16'-6"	44'-5"	10'-0"
13	83'-6"	11'-6"	63'-0"	11'-6"

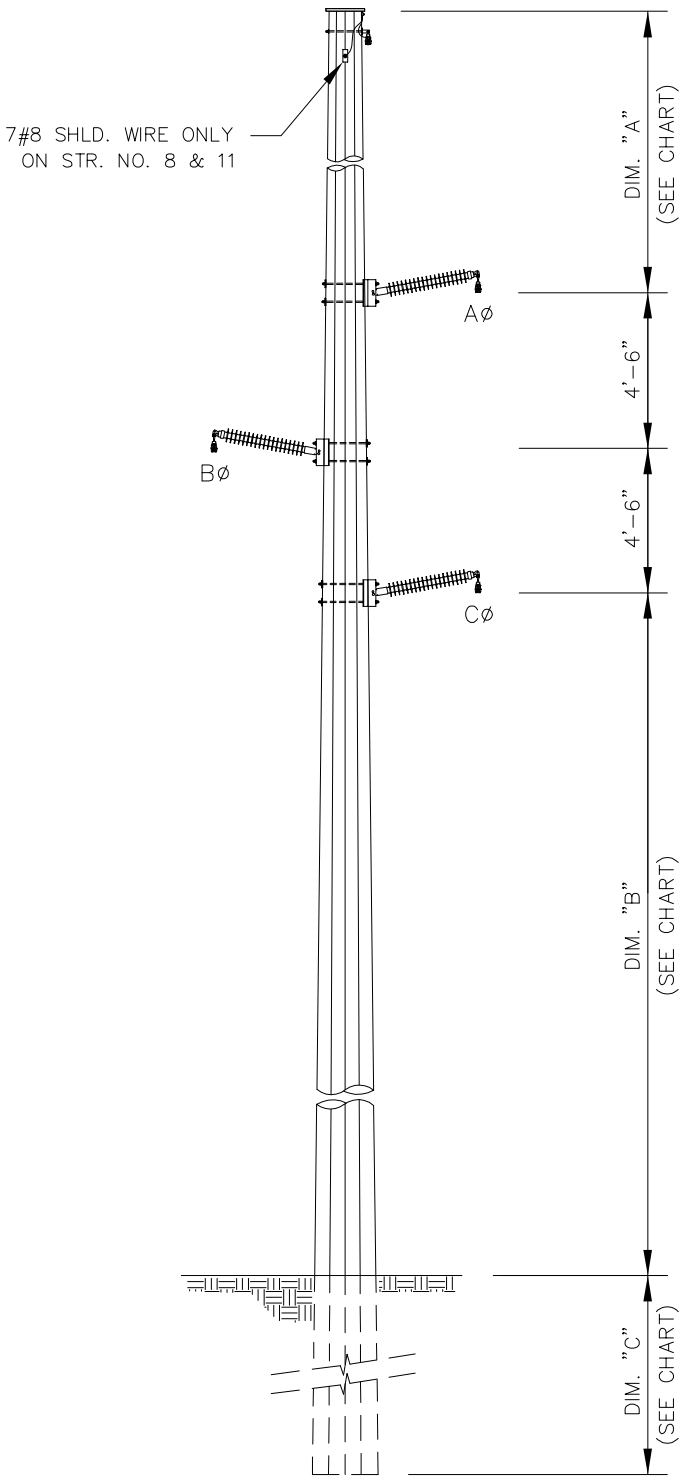

WPI-EXP-SW

LEGEND:

H.A.G. (HEIGHT ABOVE GROUND)

REV. NO.	DATE	DESCRIPTION	BY	CKD.	APV'D.
A	09-23-08	ISSUED FOR APPROVAL	MDB	KMT	MRS

REVISIONS

AMPIRICAL ENGINEER
NAME: KURT TRAUB
PHONE: 985-809-5278

DRN: MDB
DSN:
CKD:
STAMPED BY:
CAD FILENAME:
REGISTRATION NO:
CLIENT CHARGE NO:
STATE:

PROPRIETARY

This Drawing is the property of Ampirical Solutions LLC and contains proprietary and confidential information which must not be duplicated, used or disclosed other than expressly authorized by Ampirical Solutions LLC.

AMPIRICAL SOLUTIONS LLC

QUAIL BRUSH - CARLTON HILLS
138kV TRANSMISSION LINE
ALTERNATE ROUTE 2b

SCALE:	DRAWING NO:	REV.	SHEET
NONE	WPI-EXP-SW-2b	1	1 OF 1

STRUCTURE LIST			
STR. #	H.A.G.	DIM. "A"	DIM. "B"
1	75'-0"	45'-6"	T.B.D.
3	80'-0"	50'-6"	T.B.D.
6	90'-0"	60'-6"	T.B.D.
12	80'-0"	50'-6"	T.B.D.
14	75'-0"	45'-6"	T.B.D.

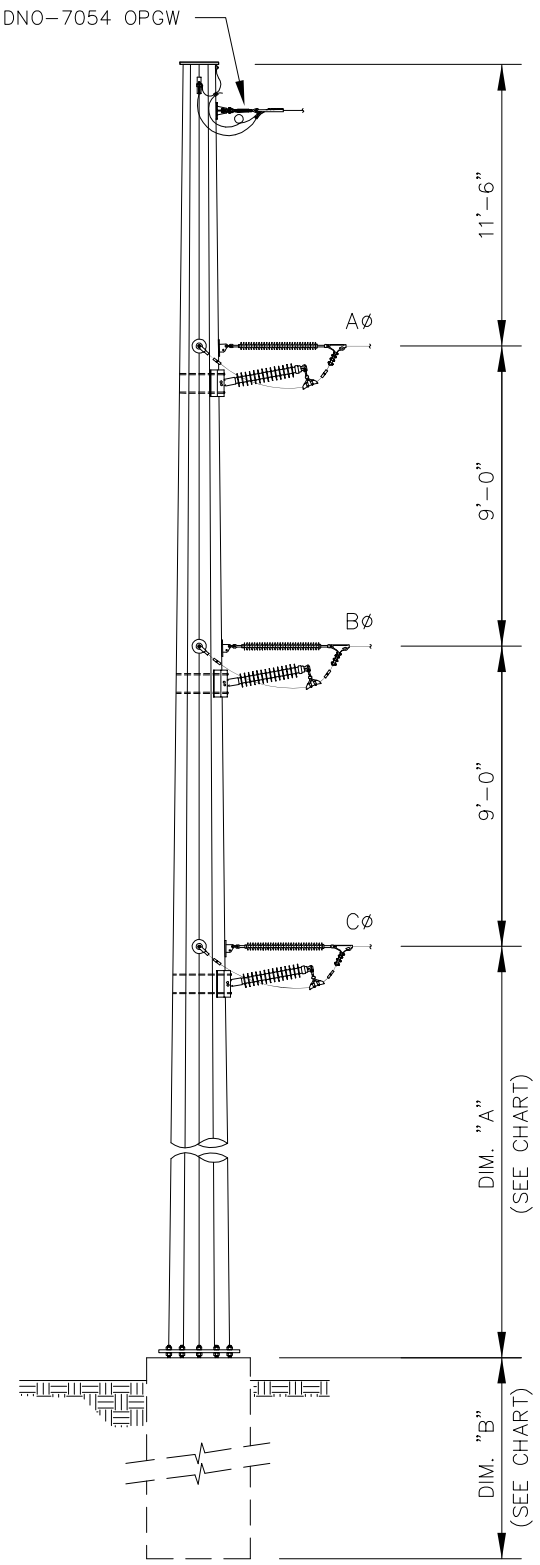

YPI-EXP-EP

LEGEND:

H.A.G. (HEIGHT ABOVE GROUND)
T.B.D. (TO BE DETERMINED)

REV. NO.	DATE	DESCRIPTION	BY	CKD.	APV'D.
A	09-23-08	ISSUED FOR APPROVAL	MDB	KMT	MRS

REVISIONS

AMPIRICAL ENGINEER
NAME: KURT TRAUB
PHONE: 985-809-5278
CAD FILENAME:
CLIENT CHARGE NO:

DRN: MDB
DSN:
CKD:
STAMPED BY:
REGISTRATION NO:
STATE:

PROPRIETARY

This Drawing is the property of Ampirical Solutions LLC and contains proprietary and confidential information which must not be duplicated, used or disclosed other than expressly authorized by Ampirical Solutions LLC.

AMPIRICAL SOLUTIONS LLC

QUAIL BRUSH - CARLTON HILLS
138kV TRANSMISSION LINE
ALTERNATE ROUTE 2b

SCALE:	DRAWING NO:	REV.	SHEET
NONE	YPI-EXP-EP-2b	1	1 OF 1

ATTACHMENT K
PRE- AND POST-PROJECT ELECTRICAL ONE-LINE DIAGRAM

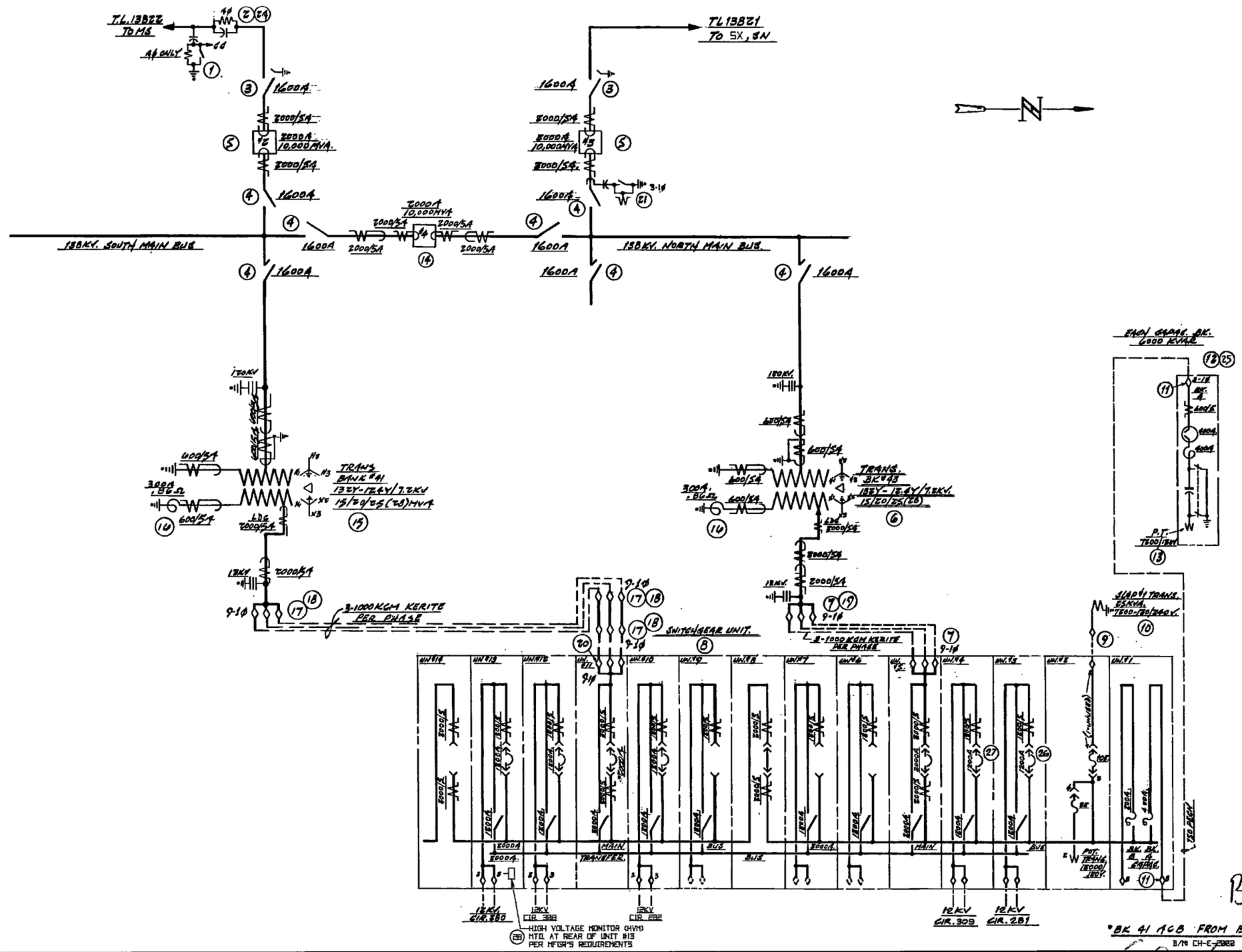

BEFORE

REVISIONS

NO.	WORK DONE	DATE	BY	APP'D
B	CHANGED DRAWING NUMBER TO STANDARD NUMBERING SYSTEM (WAS CH-E-100, REV.10) W.O. 1234567	3/9/05	PC/ADR	
I	REVISED PER FIELD CORRECTIONS W.O. 1234567	8/7/07	RG	

SAN DIEGO GAS & ELECTRIC COMPANY
SAN DIEGO, CALIFORNIA

CARLTON HILLS SUBSTATION
ONE LINE DIAGRAM

DRAWN BY DDW	DATE 3/8/76	SCALE NONE	W.O. 5984032 REV. I
CHECKED BY WCF	DATE		
APPROVED BY RJP	DATE		CH-E-38
CAD NO: CHE38	PLOT SCALE 1" = 1'		

Aug 07, 2007 - 090255

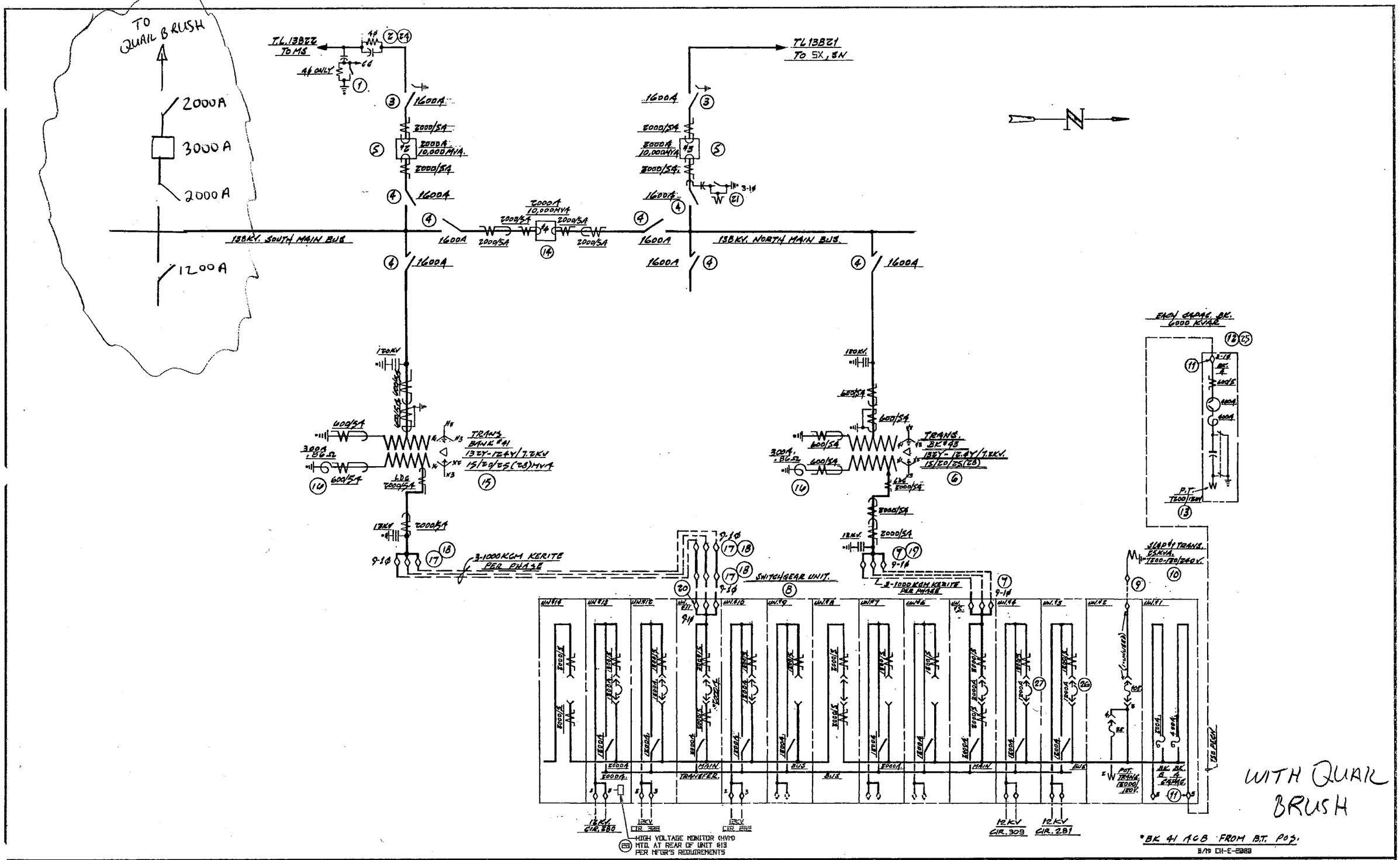

REVISIONS

NO.	WORK DONE	DATE	BY	APP'D
0	CHANGED DRAWING NUMBER TO STANDARD NUMBERING SYSTEM (WAS CH-E-100, REV.#0)	W.O. 1234567	3/9/85	PC/AIR
1	REVISED PER FIELD CORRECTIONS	W.O. 1234567	8/7/87	RG

SAN DIEGO GAS & ELECTRIC COMPANY
SAN DIEGO, CALIFORNIA

CARLTON HILLS SUBSTATION
ONE LINE DIAGRAM

DRAWN BY DDW	DATE 3/8/76	SCALE NONE	W.O. 5984092 REV. 1
CHECKED BY WCF	DATE		CH-E-30
APPROVED BY MJT	DATE		
CAD NO. CHE30	PLOT SCALE 1 = 1		

Aug 07, 2007 - 09:02:55

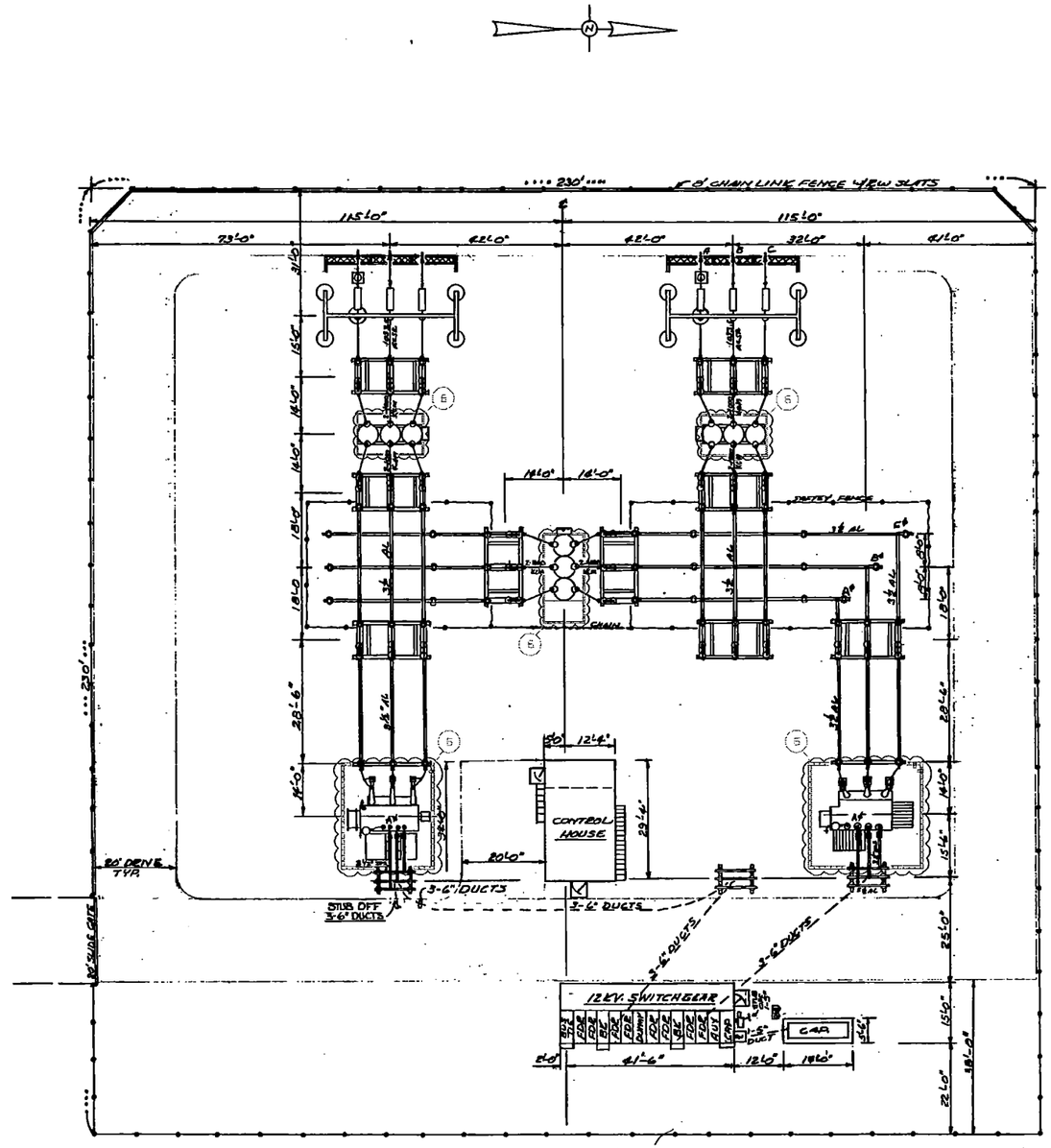

FOR DRIVEWAY SURFACING SEE STD. DWG. CE-9 TYPE "B"

BEFORE

0 4 8 16 32 48

BAR SCALE IN FEET

REVISIONS

NO.	WORK DONE	DATE	BY	APP'D	NO.	WORK DONE	DATE	BY	APP'D	NO.	WORK DONE	DATE	BY	APP'D

NO.	WORK DONE		DATE	BY	APP'D
3	ADD 2ND XFMR & BUS TIE & 3000 KVAR CANS	W.O. 5515968	12/14/78	LEA	GP
4	ADD WAVE TRAP & COUP. CAP	W.O. 5952481	8/23/83	DR/LA	DD
5	ADD PROTECTIVE FENCE	W.O. 5925000	4/11/85	DR/LA	GP
6	ADDED OIL CONTAINMENT	W.O. 5984124	10/14/03	HP/PEI	MJK

SAN DIEGO GAS & ELECTRIC COMPANY
SAN DIEGO, CALIFORNIA

CARLTON HILLS 138/12KV SUBSTATION

GENERAL ARRANGEMENT

DRAWN BY: J.LOGAN	DATE: 11/19/75	SCALE: 1/16"=1'	W.O. 5984124	REV. 6	CH-S-501
CHECKED BY: DP	DATE: 11/19/75				
APPROVED BY: GSP	DATE: 11/19/75				
CAD NO: CH5501		PLOT SCALE: 1 = 192			

Oct 14, 2008 - 10:03:54

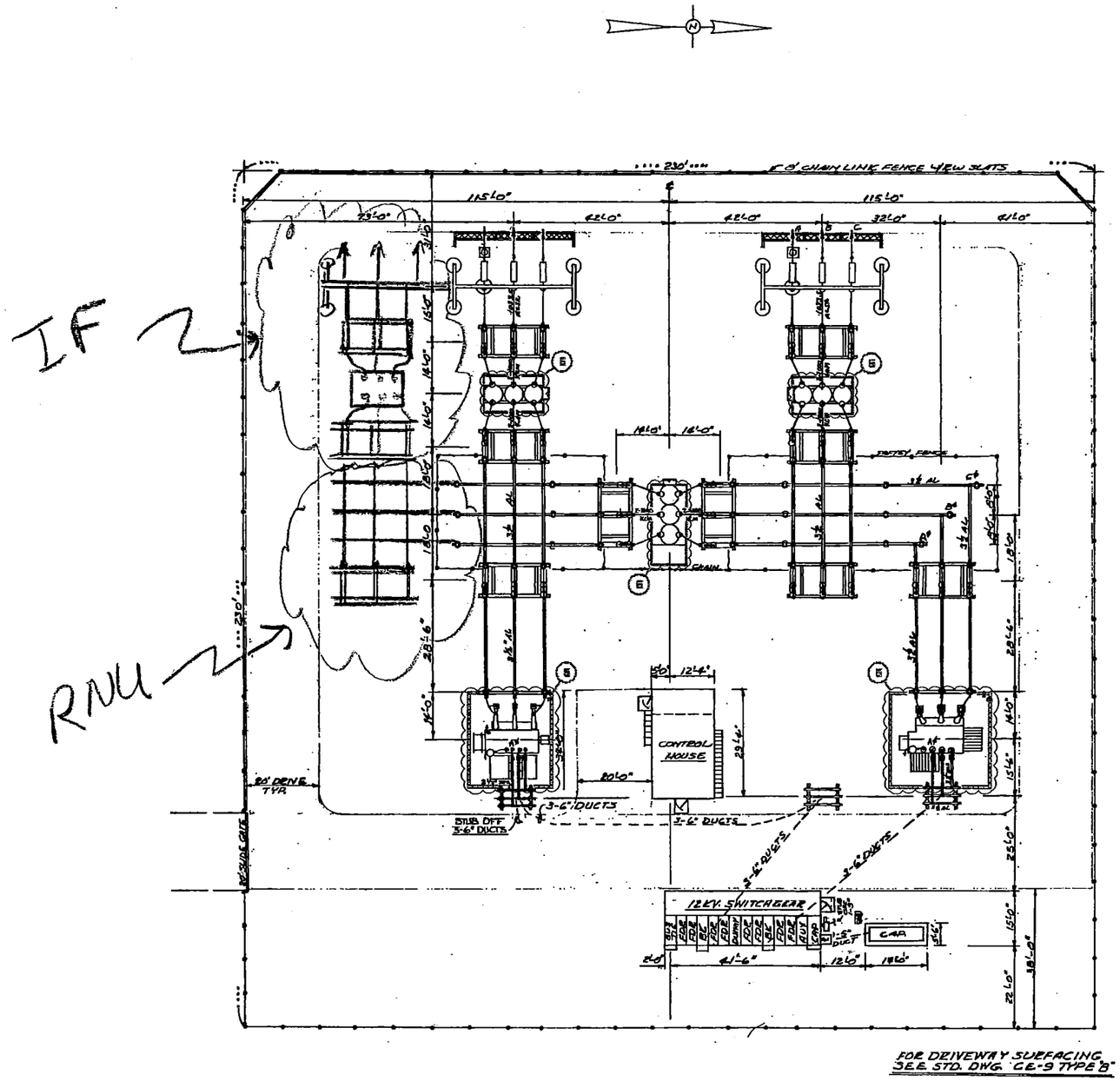

IF 2

RNU

With Quail Brush Tieline

BAR SCALE IN FEET

REVISIONS

NO.	WORK DONE	DATE	BY	APP'D	NO.	WORK DONE	DATE	BY	APP'D	NO.	WORK DONE	DATE	BY	APP'D
3	ADD 2ND XFMR & BUS TIE & 3600 KVAR CANS W.O. 5915968	10/11/75	LEA	GP										
4	ADD WAVE TRAP & COUP. CAP W.O. 5922481	6/23/83	DR/LA	DO										
5	ADD PROTECTIVE FENCE W.O. 5925888	4/8/85	DR/LA	GP										
6	ADDED OIL CONTAINMENT W.O. 5984124	10/11/93	NP/PEI	HDK										

SAN DIEGO GAS & ELECTRIC COMPANY
SAN DIEGO, CALIFORNIA

CARLTON HILLS 138/12KV SUBSTATION

GENERAL ARRANGEMENT

DRAWN BY J.LOGAN DATED 11/19/75 SCALE 1/16"=1' W.O. 5984124 REV. 6
CHECKED BY GP DATED 11/19/75
APPROVED BY GSP DATED 11/19/75
CAD NO: CH5581 PLOT SCALE 1 = 192

CH-5-581

Oct 14, 2003 - 10:03:54

ATTACHMENT L
PRE- AND POST-PROJECT PHYSICAL LAYOUT DRAWINGS

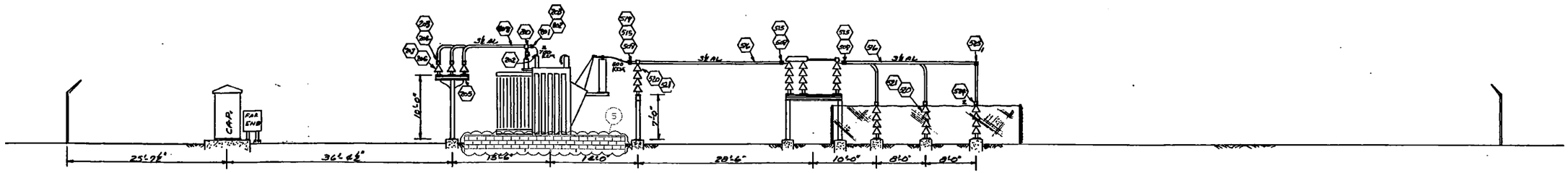

SECTION 1-1

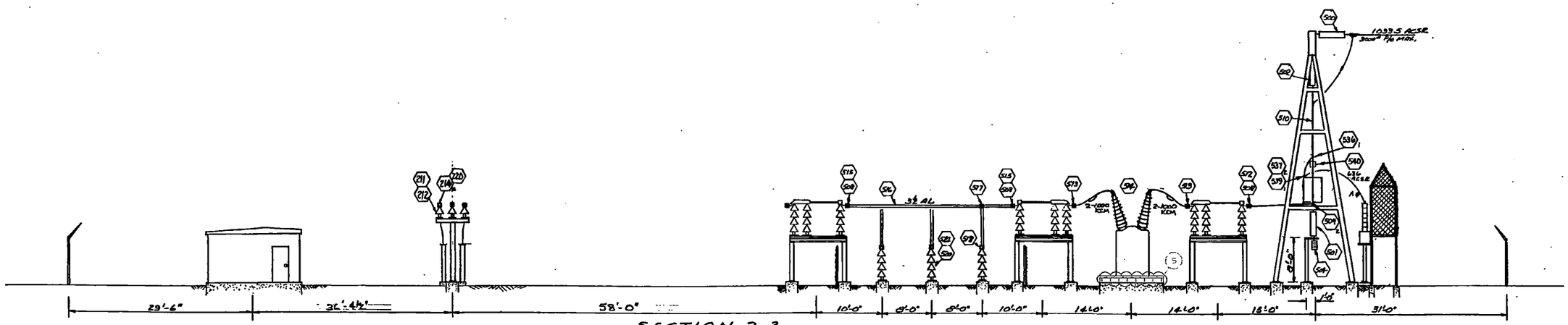

SECTION 2-2

5 SDG&E TO VERIFY MIN ELECTRICAL CLEARANCE REQUIREMENTS TO ENERGIZED PARTS.

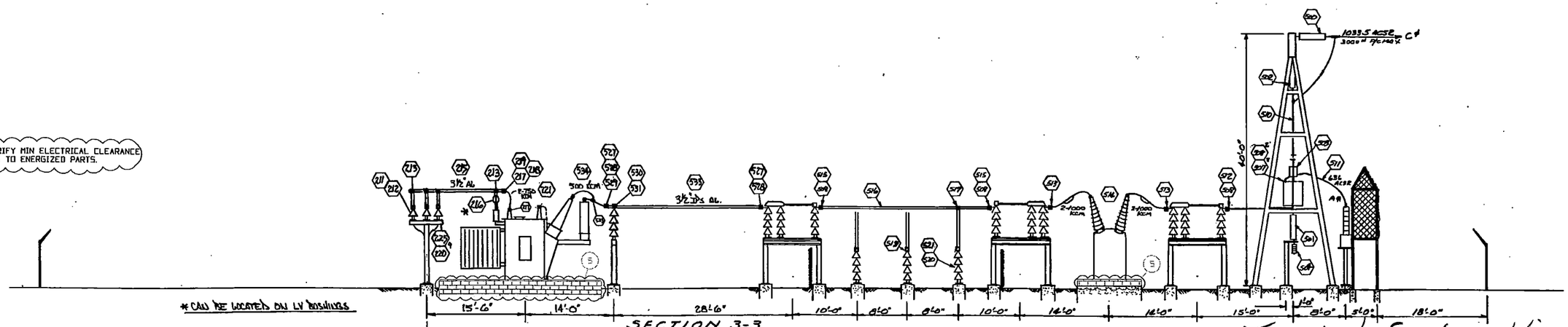

* CAN BE LOCATED ON LV BUSHINGS

SECTION 3-3

Typical Section Views

REVISIONS

NO.	WORK DONE	DATE	BY	APP'D
2	ADD BK & BUS TIE & FUT U.G. FOR BK W.O. 5915968	12/16/76	LEA	HL
3	ADD WAVE TRAP & COUP. CAP W.O. 5922481	6/23/83	DR/LA	DO
4	ADD PROTECTIVE FENCE W.O. 5925888	4/11/85	DR/LA	
5	ADDED OIL CONTAINMENT W.O. 5984124	10/14/93	HP/PEI	RDK

SAN DIEGO GAS & ELECTRIC COMPANY
SAN DIEGO, CALIFORNIA

CARLTON HILLS 138/12KV SUBSTATION
138KV SECTIONS 1-1, 2-2 & 3-3

DRAWN BY J.MOGAN DATE 11/20/75 SCALED 1/8"=1' W.O. 5984124 REV. 5
CHECKED BY DP DATE 11/20/75
APPROVED BY GP DATE 11/20/75
CAD NO. CH5535 PLOT SCALED 1:1 96

CH-S-535

Oct 14/2003 - 10:05:00