TETRA TECH EC, INC.

California Energy Commission
DOCKETED
11-AFC-3
TN # 66983
AUG 31 2012

August 30, 2012

Eric Solorio, Project Manager
California Energy Commission
Docket No. 11-AFC-3
1516 9th St.
Sacramento, CA 95814

Cogentrix Quail Brush Generation Project - Docket Number 11-AFC-3, Supplement 3 to the AFC

Mr. Solorio:

Pursuant to the provisions of Title 20, California Code of Regulation, Quail Brush Genco, LLC, a wholly owned subsidiary of Cogentrix Energy, LLC, hereby submits *Supplement 3 to the AFC for the Quail Brush Generation Project (11-AFC-3).* The Quail Brush generation Project is a 100 megawatt natural gas fired electric generation peaking facility to be located in the City of San Diego, California.

This Supplement 3 was prepared to describe a change to the proposed Project 138 kV generation tie line as described in Supplement 2, docketed on February 8, 2012, to the now-proposed 138kV transmission loop in that will interconnect at SDG&E's existing 138 kV transmission line located north of the proposed Project plant site. The 138kV loop in will require the construction of a utility switchyard that will be co-located on the proposed plant site. This Supplement provides the additional information staff will require to prepare the preliminary staff assessment, and it covers all issue areas addressed in the original AFC.

If you have any questions regarding this submittal, please contact Rick Neff at (704) 525-3800 or me at (303) 980-3653.

Sincerely,

Constance E. Farmer

Constance E. Farmer
Project Manager/Tetra Tech

cc: Lori Ziebart, Cogentrix
John Collins, Cogentrix
Rick Neff, Cogentrix
Proof of Service List

BEFORE THE ENERGY RESOURCES CONSERVATION AND DEVELOPMENT COMMISSION OF THE STATE OF CALIFORNIA
1516 NINTH STREET, SACRAMENTO, CA 95814
1-800-822-6228 – WWW.ENERGY.CA.GOV

APPLICATION FOR CERTIFICATION
FOR THE *QUAIL BRUSH GENERATION PROJECT*

DOCKET NO. 11-AFC-03
PROOF OF SERVICE
(Revised 8/14/2012)

APPLICANT
Cogentrix Energy, LLC
C. Richard "Rick" Neff, Vice President
Environmental, Health & Safety
9405 Arrowpoint Boulevard
Charlotte, NC 28273
rickneff@cogentrix.com

Cogentrix Energy, LLC
John Collins, VP Development
Lori Ziebart, Project Manager
Quail Brush Generation Project
9405 Arrowpoint Blvd.
Charlotte, NC 28273
johncollins@cogentrix.com
loriziebart@cogentrix.com

APPLICANT'S CONSULTANTS
Tetra Tech EC, Inc.
Connie Farmer
Sr. Environmental Project Manager
143 Union Boulevard, Suite 1010
Lakewood, CO 80228
connie.farmer@tetratech.com

Tetra Tech EC, Inc.
Barry McDonald
VP Solar Energy Development
17885 Von Karmen Avenue, Ste. 500
Irvine, CA 92614-6213
barry.mcdonald@tetratech.com

*Tetra Tech EC, Inc.
Sarah McCall
Sr. Environmental Planner
143 Union Boulevard, Suite 1010
Lakewood, CO 80228
sarah.mccall@tetratech.com

COUNSEL FOR APPLICANT
Bingham McCutchen LLP
Ella Foley Gannon
Camarin Madigan
Three Embarcadero Center
San Francisco, CA 94111-4067
ella.gannon@bingham.com
camarin.madigan@bingham.com

INTERVENORS
Roslind Varghese
9360 Leticia Drive
Santee, CA 92071
roslindv@gmail.com

Rudy Reyes
8527 Graves Avenue, #120
Santee, CA 92071
rreyes2777@hotmail.com

Dorian S. Houser
7951 Shantung Drive
Santee, CA 92071
e-mail service preferred
dhouser@cox.net

Kevin Brewster
8502 Mesa Heights Road
Santee, CA 92071
lzpup@yahoo.com

Phillip M. Connor
Sunset Greens Home Owners Association
8752 Wahl Street
Santee, CA 92071
connorphil48@yahoo.com

HomeFed Fanita Rancho, LLC
Jeffrey A. Chine
Heather S. Riley
Allen Matkins Leck Gamble Mallory & Natsis LLP
501 West Broadway, 15th Floor
San Diego, CA 92101
jchine@allenmatkins.com
hriley@allenmatkins.com
jkaup@allenmatkins.com

Preserve Wild Santee
Van Collinsworth
9222 Lake Canyon Road
Santee, CA 92071
savefanita@cox.net

Center for Biological Diversity
John Buse
Aruna Prabhala
351 California Street, Suite 600
San Francisco, CA 94104
jbuse@biologicaldiversity.org
aprabhala@biologicaldiversity.org

INTERESTED AGENCIES
California ISO
e-recipient@caiso.com

City of Santee
Department of Development Services
Melanie Kush
Director of Planning
10601 Magnolia Avenue, Bldg. 4
Santee, CA 92071
mkush@ci.santee.ca.us

Morris E. Dye
Development Services Dept.
City of San Diego
1222 First Avenue, MS 501
San Diego, CA 92101
mdye@sandiego.gov

*indicates change

INTERESTED AGENCIES (cont.)

Mindy Fogg
Land Use Environmental Planner
Advance Planning
County of San Diego
Department of Planning & Land Use
5201 Ruffin Road, Suite B
San Diego, CA 92123
mindy.fogg@sdcounty.ca.gov

ENERGY COMMISSION – DECISIONMAKERS

KAREN DOUGLAS
Commissioner and
Presiding Member
karen.douglas@energy.ca.gov

ANDREW McALLISTER
Commissioner and
Associate Member
andrew.mcallister@energy.ca.gov

Raoul Renaud
Hearing Adviser
raoul.renaud@energy.ca.gov

Galen Lemei
Advisor to Commissioner Douglas
galen.lemei@energy.ca.gov

*Jennifer Nelson
Advisor to Commissioner Douglas
jennifer.nelson@energy.ca.gov

David Hungerford
Advisor to Commissioner McAllister
david.hungerford@energy.ca.gov

ENERGY COMMISSION STAFF

Eric Solorio
Project Manager
eric.solorio@energy.ca.gov

Stephen Adams
Staff Counsel
stephen.adams@energy.ca.gov

Eileen Allen
Commissioners' Technical
Adviser for Facility Siting
eileen.allen@energy.ca.gov

ENERGY COMMISSION – PUBLIC ADVISER

Jennifer Jennings
Public Adviser's Office
publicadviser@energy.ca.gov

DECLARATION OF SERVICE

I, Constance E. Farmer, declare that on August 30, 2012, I served and filed copies of the attached *Supplement 3 to the AFC for the Quail Brush Generation Project (11-AFC-3)*, dated August 30, 2012. This document is accompanied by the most recent Proof of Service list, located on the web page for this project at: http://www.energy.ca.gov/sitingcases/quailbrush/index.html.

The document has been sent to the other parties in this proceeding (as shown on the Proof of Service list) and to the Commission's Docket Unit or Chief Counsel, as appropriate, in the following manner:

(*Check all that Apply*)

For service to all other parties:

_X_ Served electronically to all e-mail addresses on the Proof of Service list;

_X_ Served by delivering on this date, either personally, or for mailing with the U.S. Postal Service with first-class postage thereon fully prepaid, to the name and address of the person served, for mailing that same day in the ordinary course of business; that the envelope was sealed and placed for collection and mailing on that date to those addresses marked ***"hard copy required"** or where no e-mail address is provided.

AND

For filing with the Docket Unit at the Energy Commission:

_X_ by sending an electronic copy to the e-mail address below (preferred method); *OR*

___ by depositing an original and 12 paper copies in the mail with the U.S. Postal Service with first class postage thereon fully prepaid, as follows:

CALIFORNIA ENERGY COMMISSION – DOCKET UNIT
Attn: Docket No. 11-AFC-03
1516 Ninth Street, MS-4
Sacramento, CA 95814-5512
docket@energy.ca.gov

OR, if filing a Petition for Reconsideration of Decision or Order pursuant to Title 20, § 1720:

___ Served by delivering on this date one electronic copy by e-mail, and an original paper copy to the Chief Counsel at the following address, either personally, or for mailing with the U.S. Postal Service with first class postage thereon fully prepaid:

California Energy Commission
Michael J. Levy, Chief Counsel
1516 Ninth Street MS-14
Sacramento, CA 95814
michael.levy@energy.ca.gov

I declare under penalty of perjury under the laws of the State of California that the foregoing is true and correct, that I am employed in the county where this mailing occurred, and that I am over the age of 18 years and not a party to the proceeding.

Constance E. Farmer

COGENTRIX QUAIL BRUSH GENERATION PROJECT

Supplement 3 to the Application for Certification 11-AFC-3

August 2012

QUAIL BRUSH GENCO, LLC

TETRA TECH EC, INC.

Cogentrix

TABLE OF CONTENTS

1.0 INTRODUCTION 1-1
1.1 OVERVIEW OF PROPOSED PROJECT CHANGES 1-1
1.1.1 Changes to the Power Plant Layout 1-1
1.1.2 Addition of SDG&E Utility Switchyard 1-2
1.1.3 138 kV Line TL 13822 Looping into Onsite SDG&E Utility Switchyard 1-2
1.2 RATIONALE FOR THE PROPOSED PLANT CHANGES 1-2

2.0 PROJECT DESCRIPTION 2-1
2.1 PROJECT CHANGES 2-1
2.1.1 Modified Plant Layout within the 21.6-acre Site 2-1
2.1.2 Onsite 138 kV Plant Switchyard Description 2-2
2.1.3 SDG&E 138 kV Utility Switchyard within the 21.6-acre Site 2-2
2.1.4 Proposed Gen Tie Description 2-2
2.1.5 SDG&E 138 kV TL 13822 Loop Description 2-3
2.1.5.1 Proposed 138 kV Loop Transmission Line Characteristics 2-4
2.2 TRANSMISSION SYSTEM IMPACTS 2-6
2.2.1 System Interconnection Studies 2-6
2.2.2 Required Interconnection Facilities 2-7
2.3 TRANSMISSION INTERCONNECTION SAFETY AND NUISANCES 2-7
2.3.1 Electrical Clearances 2-7
2.3.2 Electrical Effects 2-9
2.3.3 Electric Fields 2-9
2.3.4 Magnetic Fields 2-10
2.3.5 Audible Noise 2-11
2.3.6 Induced Current and Voltages 2-11
2.3.7 Communications (Radio or Television) Interference 2-12
2.3.8 Aviation Safety 2-13
2.3.9 Vegetation Management and Associated Fire Hazards 2-13

3.0 PROPOSED PROJECT AND ALTERNATIVES 3-1
3.1 COMPARISON OF PROPOSED PROJECT AND ALTERNATIVES 3-1
3.1.1 Proposed Project with the SDG&E 138 kV Loop 3-2
3.1.2 Proposed Project with Alternative 1 SDG&E 138 kV /Loop 3-2
3.1.3 Supplement 2 Project 3-2
3.2 COMPARISON OF THE ALTERNATIVES TO THE PROPOSED PROJECT 3-4
3.2.1 Comparison of the Proposed Project to Proposed Project with Alternative 1 SDG&E 138 kV Loop 3-4
3.2.2 Comparison of the Proposed Project to the Supplement 2 Project 3-4

4.0 ENVIRONMENTAL INFORMATION 4-1
4.1 CULTURAL RESOURCES 4-1
4.2 LAND USE 4-2
4.3 NOISE 4-2
4.4 TRAFFIC AND TRANSPORTATION 4-6
4.5 VISUAL RESOURCES 4-6
4.6 SOCIOECONOMICS 4-8
4.7 AIR QUALITY 4-8
4.8 PUBLIC HEALTH 4-8
4.9 HAZARDOUS MATERIALS HANDLING 4-9
4.10 WORKER HEALTH AND SAFETY 4-9
4.11 WASTE MANAGEMENT 4-9
4.12 BIOLOGICAL RESOURCES 4-9

4.13 WATER RESOURCES 4-10
4.14 AGRICULTURE AND SOILS 4-13
4.15 PALEONTOLOGICAL RESOURCES 4-14
4.16 GEOLOGICAL HAZARDS AND RESOURCES 4-14
4.17 CUMULATIVE IMPACTS 4-14

List of Tables

Table 2.3-1 Conductor Sags and Tensions for 900 kcmil ACSS (Canary) 2-5
Table 2.3-2 Ground Clearance (Reference: RUS BULLETIN 1724E-200) 2-8
Table 2.3-3 ROW Width (Reference: RUS BULLETIN 1724E-200) 2-8
Table 3.1-1 Summary of Permanent Disturbance 3-3
Table 3.1-2 Comparison of the Proposed Project and Alternatives 3-7
Table 4.3-1 Summary of Power Plant Acoustic Modeling Results under Supplement 3 4-4
Table 4.3-2 HDD Composite Sound Spectrum Levels at a Reference Distance of 50 Feet 4-5
Table 4.3-3 Summary of HDD Acoustic Modeling Results under Supplement 3 4-5
Table 4.13-1 Water Usage Rates for the Proposed Project 4-11
Table 4.14-1 Estimate of Soil Loss by Water Erosion Using Revised Universal Soil Loss Equation (RUSLE2) 4-14

List of Figures

Figure 1.1-1 Project Layout
Figure 1.1-2 Site Plan
Figure 1.1-3 Proposed SDG&E 138 kV Loop Plan and Profile Drawing
Figure 1.1-4 Alternative 1 SDG&E 138 kV Loop Plan and Profile Drawing
Figure 2.3-1 138 kV Overhead Transmission Loop "WPI" Pole Top Arrangement
Figure 2.3-2 138 kV Overhead Transmission Loop "YPI" Pole Top Arrangement
Figure 2.3-3 138 kV Overhead Transmission Loop "Y" Pole Top Arrangement
Figure 4.3-1 3-Dimensional Rendering of Noise Model Input Data
Figure 4.3-2 Received Sound Levels During Operation of Attenuated Plant
Figure 4.3-3 Received Sound Levels During HDD Construction
Figure 4.5-1 Visual Simulation of the Project
Figure 4.14-1 Post Development Preliminary Grading Plan and Site Arrangement

1.0 INTRODUCTION

On August 25, 2011, Quail Brush Genco, LLC (Applicant) docketed with the California Energy Commission (CEC) an Application for Certification (AFC) 11-AFC-03 for its proposed Quail Brush Generation Project (Project). A Supplement to the AFC was docketed with the CEC on October 24, 2011. The Commission determined that the AFC was data adequate on November 16, 2011. Supplement 2 to the AFC was docketed with the CEC on February 8, 2012. Supplement 2 presented information regarding proposed changes to the Project, including the change to a 138 kilovolt (kV) generation tie line (gen tie) from the proposed Project site to the Carlton Hills Substation (including ancillary facilities), and a revised laydown area for the Project. In this Supplement 3, the modified Project is referred to as the "proposed Project."

This Supplement to the AFC (Supplement 3) provides information regarding additional proposed changes to the Project. The primary purpose of this Supplement is to describe changes to the plant layout and facilities, as well as the changes to the proposed gen tie (Figure 1.1-1), and to analyze the potential impacts associated with these changes. These changes have been developed to reduce the potential impacts associated with the proposed Project. The revised Project elements addressed in this Supplement include the following:

- Modified plant layout within the 21.6-acre site, including a redesigned stack configuration, a reduction in height of the 11 stacks, and a shift in the plant location
- New SDG&E 138 kV utility switchyard within the 21.6-acre site
- 138 kV Line TL 13822 looping into utility switchyard

The project description (Section 2.0 of this Supplement 3) provides details regarding each of these modified proposed Project elements. The proposed Project and alternatives are presented and compared in Section 3.0 of this Supplement. Section 4.0 of this Supplement describes the potential impacts associated with these elements as compared to the previously analyzed Project (Supplement 2 to the AFC). Conclusions are presented in Section 5.0.

1.1 OVERVIEW OF PROPOSED PROJECT CHANGES

The AFC proposed a nominal 100 megawatt (MW) intermediate/peaking generating facility using natural gas-fired reciprocating engine technology. The project, as described in the AFC and as modified by Supplements 1 and 2, included the power generation facility located on a 21.6-acre site, a natural gas pipeline, and interconnection with the SDG&E 138 kV grid at Carlton Hills Substation. These Project features have not changed in this Supplement 3. An overview of the proposed changes and the rationale for them are presented below.

1.1.1 Changes to the Power Plant Layout

The power plant would be located 150 feet to the south from the previously proposed location within the 21.6-acre plant site to accommodate the construction of the SDG&E 138 kV utility switchyard in the northeast corner of the property. As further described in Section 2 of this Supplement 3, some of the Project elements have also been reoriented within the plant facility.

The Project stacks would be arranged in two bundles (one bundle of 6 stacks and one bundle of 5 stacks). The previous arrangement had the stacks in a single line oriented east-west. The

revised bundling arrangement and reduced height of the stacks, from 100 feet to 70 feet, would both serve to reduce the visible profile of the facility.

1.1.2 Addition of SDG&E Utility Switchyard

The Applicant has worked closely with SDG&E in developing a less visible transmission alternative to the proposed gen tie routes that were presented in Supplement 2 to the AFC (11-AFC-03) from the power plant to the Carlton Hills Substation. The Applicant and SDG&E have agreed to change the proposed Project concept by looping the existing 138 kV line TL 13822 into the new utility switchyard located on the proposed Project site with a short gen tie (approximately 100 feet) between the plant switchyard and utility switchyard both located on the Project site. The existing 138 kV line TL 13822 is directly connected to the Carlton Hills Substation. Hence, with this proposed arrangement, the plant output is still delivered to SDG&E's 138 kV grid, directly connected to the Carlton Hills Substation. By co-locating the SDG&E 138 kV utility switchyard on the site, the 6,850 feet long gen tie to the Carlton Hills Substation and required modifications to the Substation to accept the gen tie would be eliminated minimizing its visual, physical, and environmental impacts to the surrounding area.

The new SDG&E 138 kV utility switchyard would be located in the northeast corner of the 21.6-acre Project site adjacent to the plant facility and would encompass approximately 1.0 acre. SDG&E is amenable to this location and is involved in the design of this 138 kV facility to ensure coordination with the existing SDG&E 138 kV system.

1.1.3 138 kV Line TL 13822 Looping into Onsite SDG&E Utility Switchyard

The new utility switchyard would be located approximately 2,700 feet south of SDG&E's existing 138 kV transmission corridor. The 138 kV Mission-to-Carlton Hills Line TL 13822 is routed in this transmission corridor. New overhead transmission lines would be erected between the line break of TL 13822 (in the corridor) and the new SDG&E utility switchyard. The loop lines would be constructed by the Applicant to SDG&E standards. SDG&E is amenable to this arrangement and is involved in the design of this 138 kV transmission line loop. The looped-in transmission line would be significantly shorter than the previously proposed long gen tie (2,700 feet versus 6,850 feet of transmission line ROW), and would reduce many of the visual and environmental concerns associated with overhead transmission line erection.

1.2 RATIONALE FOR THE PROPOSED PLANT CHANGES

The changes are being made to reduce the overall impacts associated with the proposed Project. Stack reconfiguration, stack reduction in height, onsite utility switchyard, and loop in of the existing SDG&E 138 kV transmission line would significantly reduce Project visual impacts.

2.0 PROJECT DESCRIPTION

2.1 PROJECT CHANGES

The Applicant proposes to modify the plant layout to reduce the engine stack height, reconfigure the stacks and, in consultation with SDG&E, locate the new SDG&E 138 kV utility switchyard on the 21.6-acre site. SDG&E and the Applicant also concur on the new proposed 138kV TL 13822 loop lines (138 kV loop) as the means of delivering power from the plant facility to the SDG&E grid. This Supplement 3 proposes that the Project would deliver power from the onsite plant switchyard to the new onsite SDG&E utility switchyard to the 138 kV TL 13822 loop and finally to the Carlton Hills Substation. The exact alignment of the proposed gen tie, 138 kV loop and new onsite SDG&E utility switchyard will be determined after preparation of more detailed engineering design. The revised Project elements described below include the following:

- Modified plant layout within the 21.6-acre site, including a redesigned stack configuration, a reduction in height of the 11 stacks, and a shift in the plant location
- New SDG&E 138 kV utility switchyard within the 21.6-acre site
- 138 kV Mission to Carlton Hills Line TL 13822 looping into utility switchyard

2.1.1 Modified Plant Layout within the 21.6-acre Site

The footprint of the power plant would be located within the 21.6-acre plant site, but 150 feet to the south of the location presented in the AFC, Supplement 1, and Supplement 2. This shift would free up the required area for the construction of the new SDG&E utility switchyard in the northeast corner of the proposed plant site (Figure 1.1-2).

The modified plant layout includes additional features that support the shift of the plant and the new SDG&E utility switchyard (Figure 1.1-2). Due to the shift in the location of the plant, the Project access road would be shortened and relocated. Additionally, the plant layout now includes a 24-foot wide access road that would provide access from the Project access road to and around the new onsite SDG&E utility switchyard. It also includes the use of strategically placed 10-foot high block walls to screen the plant from some views. The Applicant also proposes a low profile post and rail perimeter fence around the plant and the new SDG&E utility switchyard. The purpose of the perimeter fence would be to clearly define the plant site boundaries. In place of the leach field previously proposed, this Supplement 3 includes a septic holding tank because additional studies have shown that it is preferable to a leach field due to the onsite soil conditions. The site plan for Supplement 3 (Figure 1.1-2) also depicts water quality features including areas for bioretention or detention basins and the existing catch basins on the site. These features are not new features and would have been included in more refined drafts of the original site plan. They are included now because the Applicant is able to produce a more refined Project design than when previous site plans were submitted.

The previously proposed stacks were 100 feet tall and arranged in a single row east to west. Under this Supplement 3 the proposed stacks would be 70 feet tall and arranged in two separate collinear bundles (one bundle of 6 stacks and one of 5 stacks) (Figure 1.1-2). The proposed reduction in stack height and bundling arrangement would significantly lessen the visual impact of the facility upon the surrounding area. Air quality impacts resulting from the proposed 70-foot tall bundled stacks are being modeled and analyzed and this analysis will be provided when

complete. As with the previously proposed stack height and arrangement, the air quality impacts would be less than significant for the proposed stack height and bundled arrangement.

2.1.2 Onsite 138 kV Plant Switchyard Description

While the size and design of the onsite 138 kV plant switchyard would remain the same, the orientation of the dead-end structure would be modified to accommodate the gen tie terminations with the new onsite SDG&E utility switchyard. The plant switchyard would be located directly north of the generator step-up transformer (GSUT). The dead-end structure for the gen tie is on the northeast end of the plant switchyard and would be aligned so that it is parallel to the dead end structure in the new onsite SDG&E utility switchyard (Figure 1.1-2).

2.1.3 SDG&E 138 kV Utility Switchyard within the 21.6-acre Site

A new onsite SDG&E 138 kV utility switchyard would be located northeast of the plant and the onsite 138kV plant switchyard (Figure 1.1-2). It would be aligned in a northeast direction in the corner of the 21.6-acre Project site and would encompass approximately 1.0 acre, which would be enclosed by an 8-foot high security fence with two access gates. It would be designed and constructed in compliance with SDG&E's requirements and standards. It would utilize a radial switching scheme, low profile structures, air-insulated rigid aluminum buses and strain (conductors) buses on post insulators connected to the disconnect switches, circuit breakers, potential transformers, lightning arrestors, etc., via ACSR conductors. It will have a main rigid bus with four radial circuit bays: one for the gen tie, two for the 138 kV loop, and one for an auxiliary transformer associated with switchyard loads. There would be three dead-end structures provided, one to accept the gen tie and two others to allow looping facilities for 138 kV loop.

2.1.4 Proposed Gen Tie Description

The proposed 138 kV gen tie would start at the dead-end structure inside the plant switchyard on the northeast side of the power plant. The gen tie would proceed northeast, approximately 100 feet to a dead end structure inside the new onsite SDG&E 138 kV utility switchyard. The proposed 138 kV gen tie right of way (ROW) will be located entirely within the Project site. The proposed change in design and location of the 138 kV gen tie would render unnecessary the construction of a 6,850-foot long 138kV gen tie and the proposed modifications to the existing Carlton Hills Substation previously described in Supplement 2.

The 138 kV gen tie would conform to the recent "Electromagnetic Field (EMF) Guidelines for Electrical Facilities" prepared in response to the California Public Utility Commission (CPUC) Decision 06-01-042. The 100-foot long proposed 138 kV gen tie would be designed to carry the full output of the plant at 138 kV. The gen tie would be arrayed in three-phase horizontal configuration, supported by dead end structures located at each end of the gen tie. Selection of the appropriate conductor depends upon the peak power to be transmitted through the gen tie. The Project is capable of generating 100 MW. Assuming power factor equal to 0.90, nominal current of single circuit 138kV line will be 465 amps. Below is the ampacity rating for the selected conductor for the loop in.

Conductor Type	Current Rating (A)*
Hawk 477 kcmil ACSS/AW	1188

* Ratings from Vendor's catalogue

Current ratings for the chosen conductor exceed gen tie current requirements by almost 2.5 times. Considering all ampacity de-rating factors; solar heat absorption and conductor heat due to current and all site condition factors (such as maximum ambient temperature, azimuths of sun and line), the selected conductor is more than sufficient with regard to current carry capacity.

2.1.5 SDG&E 138 kV TL 13822 Loop Description

The proposed Project site was selected, in part, for its proximity to existing transmission and natural gas lines. SDG&E has several transmission lines near the proposed power plant. An existing transmission corridor is located approximately 3,500 feet northwest of the proposed Project site with several lines running in a southwest-northeast direction. This transmission corridor contains two separate, parallel 230 kV transmission lines (TL23022 & TL23023), two separate, parallel 138 kV transmission lines (TL13821 & TL13822), and one 69 kV transmission line. The two separate, parallel 138 kV transmission lines (TL13821 & TL13822) turn east and pass approximately 2,700 feet due north of the proposed plant site in an east-west direction. These 138 kV transmission lines directly terminate at the existing SDG&E Carlton Hills Substation located approximately 1 mile east-northeast from the plant site.

The Project with the 138 kV gen tie proposed in Supplement 2 would have delivered power into SDG&E's 138 kV Carlton Hills Substation through a 6,850-foot long overhead 138 kV gen tie originating from the plant switchyard. In this Supplement 3 the Applicant proposes to change the manner in which the Project would deliver power into the Carlton Hills Substation. The Applicant and SDG&E have agreed to change the Project concept by looping the existing 138 kV Mission to Carlton Hills transmission line TL 13822 into the new SDG&E utility switchyard co-located on the proposed Project site with a short gen tie between the plant switchyard and SDG&E's utility switchyard.

The proposed 138 kV loop would originate between the existing lattice towers Z874973 & Z874974, which support both the TL 13821 and TL 13822 lines. The proposed 138 kV loop would consist of two overhead three-phase transmission line circuits that would begin at the line break of TL 13822 in the existing SDG&E 138 kV corridor and proceed south, approximately 2,700 feet, to dead end structures located inside the new SDG&E 138 kV utility switchyard (Figure 1.1-2). The exact routing of the loop from the SDG&E corridor to the new onsite SDG&E utility switchyard will be determined in consultation with SDG&E during route survey and detailed design.

Two routes are being considered for the 138 kV loop and are located in an undeveloped rural area: the Proposed SDG&E 138 kV Loop and the Alternative 1 SDG&E 138 kV Loop (Figure 1.1-1).

- The Proposed SDG&E 138 kV loop would start at the dead-end structures inside the onsite SDG&E utility switchyard on the northeast side and connect to the double circuit monopole located on parcel 36608028. The Proposed SDG&E 138 kV loop would utilize double circuit DC-X davit arm monopole structures proceeding north through parcel 36608058 and parcel 36608027 for approximately 1,429 feet, then split into (2) single circuit lines utilizing YPI vertical dead-ends with jumpers and travel northeast for approximately 500 and 715 feet then cut into the SDG&E 138 kV TL 13822 existing lattice tower line (Figure 1.1-3).

- The Alternative 1 SDG&E 138 kV loop would start at the dead-end structure inside the SDG&E utility switchyard on the northeast side of the plant and connect to the double circuit monopole located in parcel 36608058. The Alternative 1 SDG&E 138 kV loop would utilize double DC-X davit arm monopole structures proceeding north through parcel 36608027 just inside the east property line for approximately 1,264 feet, then split into (2) single circuit lines utilizing YPI vertical dead-ends with jumpers and travel northeast and east through parcel 36608028 for approximately 863 & 1,123 feet and then cut into the SDG&E 138kV (TL 13822) existing lattice tower line (Figure 1.1-4).

The total length of the ROW for the proposed 138kV loop and alternative ROWs between the new onsite SDG&E utility switchyard and the existing SDG&E 138kV transmission corridor would be approximately 2,700 feet long. The width of the ROW corridor for the 138 kV loop and alternative would be approximately 150 feet. The 138kV loop would be installed on steel poles (Figures 2.3-1, 2.3-2 and 2.3-3) and would have a ruling span of about 450 feet. The placement and width of the ROW corridor for the proposed 138 kV gen tie and 138 kV loop lines would satisfy 138 kV line clearances and would address operational and maintenance criteria required by the CPUC General Order No. 95 (GO-95) and the recent “Electromagnetic Field (EMF) Guidelines for Electrical Facilities” prepared in response to the CPUC Decision 06-01-042.

Spur roads would be constructed off of the existing north-south access road to access each individual pole location along the proposed 138 kV loop. Approximately 1,800 feet of new earthen access roads would be constructed for the proposed 138 kV loop and 2,400 feet of new earthen access road would be constructed for Alternative 1. Table 3.1-1 contains the disturbance associated with the transmission line components as presented in Supplement 2 of the AFC as compared to the disturbance associated with this new configuration.

2.1.5.1 Proposed 138 kV Loop Transmission Line Characteristics

The proposed 138 kV loop would be designed to carry the full output of the plant at 138 kV in addition to the normal and emergency power flow in the existing transmission line. The 138 kV loop would be arrayed in a single-circuit configuration, supported by steel structures placed at approximately 500-foot intervals. Based on SDG&E recommendations, the overhead line conductor type (Table 2.3-1) would be 900 thousand circular mil (kcmil) Aluminum Conductor, Steel Supported (ACSS/AW) Cable (Canary). The ampacity rating for the 900 kcmil ACSS (Canary) conductor is 1,756 amperes.

Table 2.3-1 Conductor Sags and Tensions for 900 kcmil ACSS (Canary)

Span Length in Feet	Conditions	Tension in Pounds
100-foot span (Line Break)		
GO-95 Light	I	8,004
Extreme Wind	I	5,942
0° Final	F	9,494 (0.13 feet)
60° Hot	F	4,789 (0.26 feet)
130° Hot	F	1,196 (1.03 feet)
212° Hot	F	861 (1.43 feet)
270° Hot	F	718 (1.71 feet)
300 to 400-foot span		
GO-95 Light	I	6,821
Extreme Wind	I	6,730
0° Final	F	7,198 (2.34 feet)
60° Hot	F	4,623 (3.65 feet)
130° Hot	F	2,780 (6.09 feet)
212° Hot	F	2,305 (7.35 feet)
270° Hot	F	2,058 (8.24 feet)
400 to 500-foot span		
GO-95 Light	I	6,849
Extreme Wind	I	7,131
0° Final	F	7,082 (4.24 feet)
60° Hot	F	4,848 (6.20 feet)
130° Hot	F	3,272 (9.20 feet)
212° Hot	F	2,717 (11.10 feet)
270° Hot	F	2,480 (12.18 feet)
500 to 600-foot span		
GO-95 Light	I	6,995
Extreme Wind	I	7,653
0° Final	F	6,884 (8.14 feet)
60° Hot	F	5,095 (11.02 feet)
130° Hot	F	3,841 (14.65 feet)
212° Hot	F	3,209 (17.57 feet)
270° Hot	F	2,989 (18.88 feet)
700 to 850-foot span		
GO-95 Light	I	6,899
Extreme Wind	I	7,931
0° Final	F	6,757 (11.26 feet)
60° Hot	F	5,202 (14.65 feet)
130° Hot	F	4,110 (18.58 feet)
212° Hot	F	3,459 (22.13 feet)
270° Hot	F	3,252 (23.56 feet)

Notes:

tension data extrapolated

NESC High Wind 18.5 pounds per square foot

Acronyms and Abbreviations:

°	degrees
ACSS	Aluminum Conductor Steel Supported Cable
F	Final
GO-95	California General Order No. 95
I	Initial
kcmil	thousand circular mil

The selection of the steel pole designs for the 138kV loop will be determined by the exact route selected, and the changes of direction needed in the transmission line. Heavy-angle structures would be placed as required to accommodate changes in direction of the line. The remaining pole structures would be tangent-type design and would be spaced based on engineering criteria. The new pole structures would be approximately 65 to 85 feet tall. See the structure framing drawings for the steel poles (Figures 2.3-1, 2.3-2, and 2.3-3) that are to be utilized.

The structure types of the 138 kV loop would be single circuit or double circuit steel mono-pole design with phase conductors arranged vertically. Steel davit arm double circuit vertical dead-ends (DC-X) and steel single circuit vertical dead-ends (Y and YPI) pole outlines and geometry are shown in the three structure framing drawings (Figures 2.3-1, 2.3-2, and 2.3-3). The insulators used for all dead-end structures (DC-X, Y and YPI-type) would be 138 kV silicone rubber strains with a tensile capacity of 25,000 lbs. Insulators for jumpers on dead-end structures (YPI-type) would be 138 kV polymer type posts. For all insulator applications, mechanical loading shall not exceed 50 percent of the insulator's strength capacity under GO 95 loading conditions. The maximum sag for 900 kcmil ACSS/AW (Canary) conductor in an 845-foot span at 270°F is 23.56 feet (Table 2.3-1).

Additional preliminary detail for the 138 kV loop is provided in Section 2.3.

2.2 TRANSMISSION SYSTEM IMPACTS

2.2.1 System Interconnection Studies

As discussed in Supplement 2, CAISO and SDG&E jointly performed the Phase II Interconnection Study for the San Diego Area Clusters 1 and 2, which includes the Project. The study examined the local and regional loads, rating of the existing transmission system and the ability of the existing transmission grid to safely and reliably transmit the Project's nominal capacity (100 MW net), along with the anticipated increases in capacity from other projects in San Diego Area Clusters 1 and 2. The results of the studies, coupled with the physical location of the transmission resources relative to the proposed Project, aids in the selection of the proposed interconnecting transmission line route and design of interconnection facilities.

An Addendum to the Phase II Interconnection Study report, which reflected the change in POI to the SDG&E 138 kV Carlton Hills Substation, was issued by CAISO on January 17, 2012. A Revised Second Addendum Appendix A was issued by CAISO on February 14, 2012. The Revised Second Addendum reduced the Delivery Network Upgrade costs attributable to the Project. On June 4, 2012, CAISO issued a Re-Study of the C1C2 Phase II Interconnection Study. The Re-Study reduced the costs of the Reliability Network Upgrades to $180,000 and eliminated all of the remaining Delivery Network Upgrade costs attributable to the Project.

Previously, the Phase II Interconnection Study had identified the possibility for the Project to cause adverse impacts to the transmission system that would require network upgrades to mitigate potential problems. However, the Re-Study determined that almost all of these network upgrades are no longer necessary. The elimination of these network upgrades results in a cost savings to the ratepayers.

2.2.2 Required Interconnection Facilities

This Supplement 3 proposes a modification to the interconnection facilities such that the plant output would be delivered from the plant switchyard to the onsite SDG&E utility switchyard via a 100-foot long gen tie and then to the new 138 kV TL 13822 loop to the Carlton Hills Substation. While SDG&E has participated in discussions producing this proposed modification, it has not been approved by CAISO. The Applicant understands that CAISO and SDG&E will evaluate the modified interconnection facilities and provide a response within 3 months.

The Applicant expects the construction time for the required interconnection facilities (the onsite 138 kV SDG&E utility switchyard, the new 138 kV gen tie, and 138 kV loop) to be less than 12 months and would be undertaken concurrently with power plant construction.

2.3 TRANSMISSION INTERCONNECTION SAFETY AND NUISANCES

This section discusses safety and nuisance issues associated with the proposed electrical connection of the proposed Project to the SDG&E electrical grid. The change in the Project from a 6,850-foot long 138 kV gen tie to a 100-foot long gen tie and 138 kV loop does not require additional modeling of safety and nuisance factors to determine any potential impacts that may result from the change in the Project because the CPUC does not require EMF modeling for a 138 kV line located on undeveloped land. Construction and operation of the proposed overhead gen tie and the 138 kV loop would be undertaken in a manner that ensures the safety of the public, as well as maintenance and ROW crews, while supplying power with minimal electrical interference.

2.3.1 Electrical Clearances

Typical high-voltage overhead transmission lines are composed of bare conductors connected to supporting structures by means of porcelain, glass, or polymer insulators. The air surrounding the energized conductor acts as the insulating medium. Maintaining sufficient clearances, or air space, around the conductors to protect the public and utility workers is paramount to safe operation of the line.

The proposed 138 kV loop would be installed overhead, approximately 2,700 feet in length and consist of approximately 5,400 feet of single circuit three-phase overhead transmission line, in an approximately 100- to 150-foot wide ROW. The proposed 138 kV gen tie would also be installed overhead and would be approximately 100 feet in length within the proposed plant site. The 138 kV gen tie and the 138 kV loop would be constructed with bare overhead conductors connected to supporting structures by means of porcelain, glass, or polymer insulators. The 138 kV loop would be built by the Applicant and owned and operated by SDG&E. The safety clearance required around the conductors is determined by normal operating voltages, conductor temperatures, short-term abnormal voltages, windblown swinging conductors, contamination of the insulators, clearances for workers, and clearances for public safety. Minimum clearances are specified in GO-95 and the National Electrical Safety Code (NESC). Electric utilities, state regulators, and local ordinances may specify additional (more restrictive) clearances.

Required overhead line clearances above ground and ROW width for the lines rated at 138 kV are provided in Tables 2.3-2 and 2.3-3 below. The clearances have not changed from Supplement 2.

Table 2.3-2 Ground Clearance (Reference: RUS BULLETIN 1724E-200)

Clearance Description	Clearance Above Ground 138 kV Line Voltage Phase to Phase (Nominal) (feet)
Spaces and ways accessible to pedestrians only Note: Areas accessible to pedestrians only are areas where riders on horses or other large animals, vehicles or other mobile units exceeding 8 feet in height are prohibited by regulation or permanent terrain configurations or are not normally encountered or reasonably anticipated. Land subject to highway right-of-way maintenance equipment is not to be considered as being accessible to pedestrians only	30

Table 2.3-3 ROW Width (Reference: RUS BULLETIN 1724E-200)

Clearance Description	Typical ROW Width 138 kV Line Voltage Phase to Phase (Nominal) (feet)
ROW width	100-150

As stated in Supplement 2, other typical clearances will be specified for the following, as part of the final design:

- Distance between the energized conductors themselves (same line)
- Distance between the energized conductors and the supporting structure (taking into account the length of insulators used and the swing and vibration movement of the conductors)
- Distance between the energized conductors and other power or communication wires on the same supporting structure, or between other power or communication wires above or below the conductors
- Distance from the energized conductors to the ground and features, such as roadways, railroads, driveways, parking lots, navigable waterways, and airports
- Distance from the energized conductors to buildings and signs
- Distance from the energized conductors to other power lines (examples include other parallel lines and lines being crossed over)

The proposed Project gen tie and 138 kV loop would be designed to meet all national, state, and local code clearance requirements. These standards are summarized in the LORS table in Section 2.9 of the AFC and described in more detail in Appendix B, Engineering Design Criteria of the AFC.

2.3.2 Electrical Effects

As stated in Supplement 2, the electrical effects of high-voltage transmission lines fall into two broad categories—corona effects and field effects. Because these effects have the potential to cause a deviation from the normal they are often termed Electromagnetic Interference (EMI):

- Corona is the ionization of the air that occurs at the surface of the energized conductor and suspension hardware due to very high (i.e., when it is above a critical level) electric field strength at points between the high voltage side of the line and ground. The location and extent of corona varies and is dependent on the design, construction techniques and the environment. Besides the power loss associated with corona, corona could result in radio and television reception interference (RI and TVI), audible noise (AN), light, and production of ozone. The key technical parameters affecting corona include: line voltage, line phase configuration, insulating distances, insulating hardware, conductors and configuration of conductor bundles, environmental parameters, and attention to detail during construction.
- Field effects are a direct result of the voltage and current associated with the line. Electric field effects are a direct result of the 60 hertz (Hz) line voltage and the 60 Hz magnetic field effects and are a consequence of the load current. These fields are of interest because they couple into nearby objects. Consequently, levels need to be managed such that the coupling does not produce unintended consequences.

Operating power lines, like the energized components of electrical motors, home wiring, lighting, and all other electrical appliances, produce electric and magnetic fields commonly referred to as the electromagnetic field (EMF). The dominant EMF produced by the alternating current electrical power system in the United States has a frequency of 60 Hz, meaning that the intensity and orientation of the field changes 60 times per second. Consequently, it is essential to ensure electromagnetic compatibility (EMC) with the operating environment.

The 60 Hz power line fields are considered to be extremely low frequency. To place this in context, other common frequencies include: AM radio, which operates up to 1,600,000 Hz (1,600 kilohertz [kHz]); television, 890,000,000 Hz (890 megahertz [MHz]); cellular telephones, 900,000,000 Hz (900 MHz); microwave ovens, 2,450,000,000 Hz (2.4 gigahertz [GHz]); and X-rays, about 1 billion Hz. Higher frequency fields have shorter wavelengths and greater energy in the field. Microwave wavelengths are a few inches long and have enough energy to cause heating in conducting objects. High frequencies, such as X-rays, have enough energy to cause ionization (breaking of atomic or molecular bonds). At the 60 Hz frequency associated with electric power transmission, the electric and magnetic fields have a wavelength of 3,100 miles and have very low energy that does not cause heating or ionization. The 60 Hz fields do not radiate, unlike radio frequency fields.

2.3.3 Electric Fields

As stated in Supplement 2, electric fields around transmission lines are produced by potential difference (voltage) between an energized conductor and surrounding objects. Electric field strength is directly proportional to the line's voltage; that is, increased voltage produces a stronger electric field. The electric field is inversely proportional to the distance from the conductors, so that the electric field strength declines as the distance from the conductor increases. As the electric field is relative to line voltage which can be considered a "constant", the electric field around a transmission line remains practically steady and is not affected by the

common daily and seasonal fluctuations in the use of electricity by customers. The electric field pattern however, is affected by both permanent and temporary objects within the electric field.

The basic unit of measurement for an electric field is V/m – volts per meter. In the case of transmission lines the usual unit of measure is kV/m – thousands of volts per meter. The measurement of electric field strength at the ground will be recorded before the construction of 138 kV gen tie and loop lines and again after the lines are energized. These measurements will be taken along the center line of the ROW and along the edge of the ROW

2.3.4 Magnetic Fields

As stated in Supplement 2, magnetic fields or EMF around transmission lines are produced by the current flow, measured in terms of amperes, through the conductors. The magnetic field strength is directly proportional to the magnitude of current flow; that is, increased amperes produce a stronger magnetic field, or increased magnetic flux density. The magnetic field is inversely proportional to the distance from the conductors. Thus, like the electric field, the magnetic field strength declines as the distance from the conductor increases. The international unit of measure for magnetic flux density is Tesla (T). In the United States, the more common measure is Gauss (G). For transmission lines, typical magnetic fields are expressed in units of milligauss (mG). The amperes and, therefore, the magnetic field around a transmission line, fluctuate daily and seasonally as the use of electricity varies.

Considerable research has been conducted over the last 30 years on the possible biological effects and human health effects from EMF. This research has produced many studies that offer no uniform conclusions about whether or not long-term exposure to EMF is harmful. In the absence of conclusive or evocative evidence, some states, California in particular, have chosen not to specify maximum acceptable levels of EMF. Instead, these states mandate a program of prudent avoidance whereby EMF exposure to the public would be minimized by encouraging electric utilities to use low-cost techniques to reduce the levels of EMF. Per CPUC policy, low cost EMF mitigation is not necessary for lines located on undeveloped land.

While the State of California does not set a statutory limit for electric and magnetic field levels, the CPUC, which regulates electric transmission lines, mandates EMF reduction as a practicable design criterion for new and upgraded electrical facilities. As a result of this mandate, the regulated electric utilities have developed their own design guidelines to reduce EMF at each new facility. In the spring of 2006, a utility workshop culminated in the development of standardized design guidelines. The CEC, which regulates transmission lines to the first POI, requires independent power producers to follow the existing guidelines used by local electric utilities or transmission system owners.

As stated in Supplement 2, in keeping with the goal of EMF reduction, the interconnection of the proposed Project would be designed and constructed using the principles outlined in the SDG&E publication, *EMF Design Guidelines for Electrical Facilities*. These guidelines explicitly incorporate the directives of the CPUC by developing design procedures compliant with Decision 93-11-013 and General Orders 95, 128, and 131-D. When the 138 kV gen tie and the 138 kV loop structures, conductors, and alignment are designed according to the SDG&E guidelines, the 138 kV gen tie and the 138 kV loop will be consistent with the CPUC mandate.

From page 5 of the SDG&E guidelines (2006), the following are the primary techniques for reducing EMF along the line:

1. Increasing the distance from the electrical facilities by:
    a. Increasing the structure height
    b. locating power lines closer to the centerline of the ROW
2. Reducing conductor (phase) Spacing
3. Phasing circuits to reduce magnetic fields

2.3.5 Audible Noise

As stated in Supplement 2, corona is a function of the voltage of the line, the diameter of the conductor, and the condition of the conductor and suspension hardware and the environment. The electric field gradient is the rate at which the electric field changes and is directly related to the line voltage. The electric field gradient is greatest at the surface of the conductor. Large-diameter conductors and bundles of conductors (a bundle of conductors is equivalent to a conductor of the same diameter as the outer diameter of the bundle) have lower electric field gradients at the conductor surface and, hence, lower corona than smaller conductors, everything else being equal. Irregularities, such as nicks and scrapes on the conductor surface, or sharp edges on suspension hardware, concentrate the electric field at these locations and increase corona at these spots. Similarly, contamination on the conductor surface, such as dust or insects, can cause irregularities that are a source for corona. Raindrops, snow, fog, and condensation are also sources of irregularities. Corona typically becomes a design concern for transmission lines having voltages of 345 kV and above.

As stated in Supplement 2, currently, the area immediately surrounding the power plant site is undeveloped land and the majority of noise sensitive areas are located to the east in the City of Santee. There is significant terrain shielding that will help block sound propagating to the residential areas. Given the extended separation from receptors and terrain shielding, operation of the 138 kV gen tie, the 138 kV loop (see Section 4.3 Noise of this Supplement 3 for the noise analysis), and onsite utility switchyard are not expected to result in an adverse noise impact. Transmission line and switchyard audible noise are further discussed in AFC Section 4.3.4.3.

2.3.6 Induced Current and Voltages

As stated in Supplement 2, a conducting object, such as a vehicle or person located within an electric field, will have induced voltages and currents. The strength of the induced current will depend on the electric field strength, the location, size and shape of the conducting object, and the object-to-ground resistance. Examples of measured induced currents in a 1 kV/m electric field are about 0.016 milliamps (mA) for a person, about 0.41 mA for a large school bus, and about 0.63 mA for a large trailer truck.

When a conducting object is isolated from the ground (e.g. the rubber tires of a vehicle) and a grounded person touches the object, a perceptible current or shock could occur as the current flows to ground. In the case of a person the common terms for this are called: step-and-touch potential. Shocks are classified as below perception, above perception, secondary, and primary. The mean perception level is 1.0 mA for a 180-pound man and 0.7 mA for a 120-pound woman. Secondary shocks cause no direct physiological harm, but could annoy a person and cause

involuntary muscle contraction. The lower average secondary shock level for an average sized man is about 2 mA. Primary shocks can be harmful. Their lower level is described as the current at which 99.5 percent of subjects can still voluntarily “let go” of the shocking electrode. For a 180-pound man this is 9 mA, for a120-pound woman, 6 mA, and for children, 5 mA. The NESC specifies 5 mA as the maximum allowable short-circuit current-to-ground from vehicles, trucks, and equipment near transmission lines.

The mitigation for hazardous and nuisance shocks is to ensure that metallic objects on or near the ROW for the 138 kV gen tie and loop are grounded, and that sufficient clearances are provided at roadways and parking lots to keep electric fields at these locations sufficiently low to prevent vehicle short circuit currents from exceeding 5 mA.

Magnetic fields can also induce voltages and currents in conducting objects. Typically, this requires a long metallic object, such as a wire fence or aboveground pipeline that is grounded at only one location. A person who closes an electrical loop by grounding the object at a different location will experience a shock similar to that previously described for an ungrounded object. Mitigation for this problem is to ensure multiple grounds on fences or pipelines, especially those that are oriented parallel to the transmission line.

As stated above, the proposed 138 kV gen tie and loop would be constructed in conformance with CPUC GO-95 and Title 8 CCR 2700 requirements. Therefore, hazardous shocks are unlikely to occur as a result of Project construction, operation, or maintenance.

2.3.7 Communications (Radio or Television) Interference

As stated in Supplement 2, the North American Regional Broadcasting Agreement recognizes a 54 decibel (dB) signal level as the outer boundary of an AM radio station’s primary service territory. The amount of AM radio interference caused by the 138 kV gen tie and loop depends on the relative signal strength of the radio signal and other sources of ambient radio noise. The Federal Communications Commission (FCC) recommends the following minimum signals as necessary to reliably serve a primary service area:

- Business City Area: 80 to 94 dB
- Residential City Area: 66 to 80 dB
- Rural Area: 40 to 54 dB

The requirements for higher signal strengths in city areas takes into consideration the higher level of ambient noise levels typically found in the city as compared with a rural location.

Good radio reception is typically based on a signal strength 26 dB greater than ambient noise. This 26 dB signal-to-noise ratio is applied to the fair weather ambient noise level. A commonly accepted level of transmission radio noise is 40 to 45 dB at the edge of any ROW for fair weather conditions. A 40 dB noise level and 26 dB signal-to-noise ratio would imply a signal strength of 66 dB, which agrees with recommended signal strength as listed above for a residential city area.

Digital communication (digital radio and TV) and FM radio is immune to corona type radio noise and, therefore, is not considered in evaluation of transmission radio interference. Television audio is also an FM signal that is not affected by transmission line radio noise. In the past and in

some areas, Television video is an AM signal that is subject to interference from transmission lines. As analog TV is phased out in favor of digital TV, TV interference will not be an issue. However, the frequency spectrum for fair weather corona noise follows an inverse law. The transmission noise attenuates at a rate of 20 dB per frequency decade. In addition to attenuation for frequency, an adjustment is made for the different bandwidth of the television signal versus AM radio. When the frequency and bandwidth adjustments are made, the net correction is 10 dB. The expected noise at television frequencies is 10 dB less than for AM radio.

2.3.8 Aviation Safety

Federal Aviation Administration (FAA) Regulations, Title 14 of the Code of Federal Regulations (CFR), Part 77, establishes standards for determining obstructions in navigable airspace in the vicinity of airports that are available for public use and are listed in the airport directory of the current airman's information manual. These regulations set forth requirements for notification of proposed obstructions that extend above the earth's surface. FAA notification is required for any potential obstruction structure erected over 200 feet in height above ground level. Notification is required if the obstruction is greater than specified heights and falls within any restricted airspace in the approach to airports. For airports with runways longer than 3,200 feet, the restricted space extends 20,000 feet (3.3 nautical miles) from the runway with no obstruction greater than a 100:1 ratio of the distance from the runway. For airports with runways measuring 3,200 feet or less, the restricted space extends 10,000 feet (1.7 nautical miles) with a 50:1 ratio of the distance from the runway. For heliports, the restricted space extends 5,000 feet (0.8 nautical miles) with a 25:1 ratio.

The Marine Corps Air Station (MCAS) Miramar boundary is to the north of the Project approximately 1.55 miles, and the main runway complex at MCAS Miramar is 6 miles to the northwest. Gillespie Field (airport) lies approximately 3 miles to the southeast, and Montgomery Field (airport) lies 6.4 miles to the southwest. While the gen tie will be below the thresholds associated with FAA regulations and impacts would be less than significant, the Applicant will file a Notice of Proposed Construction or Alteration (Form 7460-1) with the FAA. The Project would also comply with the San Diego County Regional Airport Land Use Commission (ALUC) – Miramar Airport Land Use Compatibility Plan.

2.3.9 Vegetation Management and Associated Fire Hazards

The proposed 138kV gen tie would be entirely located on the proposed Project site and the route would be cleared of all vegetation. The proposed 138 kV loop would be designed, constructed, and maintained by SDG&E in accordance with GO-95, which establishes clearances from other constructed and natural structures and tree-trimming requirements to mitigate fire hazards. In the event that trees are encountered along the proposed 138 kV loop corridor, those trees would be trimmed or removed to ensure mitigation of these hazards. However, it is unlikely that any vegetation management would be required because the entire proposed route is over undeveloped scrubland. SDG&E would maintain the 138 kV loop ROW and immediate area in accordance with accepted industry practices that would include identification and abatement of any fire hazards to ensure safe operation of the 138 kV loop.

This page intentionally left blank.

3.0 PROPOSED PROJECT AND ALTERNATIVES

The proposed Project described in the AFC included a nominal 100 MW intermediate/peaking load facility using natural gas-fired reciprocating engine technology located on a 21.6-acre plant site, a gen tie line, and a natural gas pipeline lateral. Supplement 2 proposed to change the gen tie route and voltage and the location of the temporary construction laydown area of the Project proposed in the AFC. This Supplement 3 proposes to modify the Project by reconfiguring the power plant on the 21.6-acre plant site to include an onsite SDG&E utility switchyard, to modify the stacks to be bundled into two groups at a reduced stack height of 70 feet, and to reconfigure the gen tie to include a 100-foot long gen tie and an SDG&E 138 kV loop and line break (138 kV loop).

Two routes are being considered for the proposed Project's 138 kV loop: the proposed SDG&E 138 kV loop and the Alternative 1 SDG&E 138 kV loop. The gen tie is the same for both the proposed SDG&E 138 kV loop and Alternative 1 SDG&E 138 kV loop. The Point of Interconnection for the proposed Project with either 138 kV loop is the existing SDG&E Carlton Hills Substation. As described in Section 2.0 of this Supplement 3, the change from the 138 kV gen tie to the SDG&E 138 kV loop eliminates the need for the 6,850-foot long gen tie route alignment described in Supplement 2.

The proposed Project changes are described in detail in Section 2.0. Unless otherwise noted in this section, the information presented in Supplement 2 would not change per the revised Project description. The Project objectives are the same as described in Section 3.1 of the AFC.

3.1 COMPARISON OF PROPOSED PROJECT AND ALTERNATIVES

Section 3 of the AFC described and analyzed a no project alternative as well as three alternative sites. The modifications proposed in this Supplement do not change any of the analyses or conclusions regarding the no project alternative or the alternative sites and therefore, the selection of the Project site is not considered or discussed in this Supplement 3. Section 3 of Supplement 2 considered and analyzed the substitution of a 138kV gen tie for the previously proposed 230 kV gen tie with the concomitant change of POI. The proposed gen tie route, as well as three alternative routes, was compared in Supplement 2. In this Supplement 3, two alternatives to the proposed Project are analyzed in detail:

- the modified Project layout proposed in this Supplement 3 with the Alternative 1 SDG&E 138 kV loop (Project with Alternative 1 SDG&E 138 kV loop); and
- the Project proposed in Supplement 2 that included an approximately 6,850-foot long 138 kV gen tie between the plant site and the SDG&E Carlton Hills Substation (Supplement 2 proposed Project).

In addition, the three alternatives from Supplement 2 are compared to the proposed Project in Table 3.1-2.

Each of these alternatives was determined to feasibly attain most of the basic project objectives. These alternatives were also evaluated on the basis of the AFC environmental disciplines and estimated engineering and economic costs associated with the various perceived mitigation measures.

3.1.1 Proposed Project with the SDG&E 138 kV Loop

The proposed Project would shift the footprint of the power plant 150 feet to the south from the location described in the AFC, Supplement 1, and Supplement 2. This shift would accommodate the new SDG&E utility switchyard in the northeast corner of the proposed plant site (Figure 1.1-2). The proposed Project would reduce the height of the stacks from 100 feet to 70 feet and would arrange the stacks in two separate collinear bundles. Additionally, the proposed Project would include a shorter and relocated Project access road, a new 24-foot wide access road that would provide access from the Project access road to the new onsite SDG&E utility switchyard, perimeter fences around the plant and the new SDG&E utility switchyard, and a septic holding tank. The permanent power plant site footprint of the proposed Project including the switchyard would increase to 12 acres as compared to the Supplement 2 project.

The proposed Project would include a 100-foot long gen tie fully contained within the plant site, and the proposed SDG&E 138 kV loop that are shown on Figure 1.1-1. The approximate length of the proposed SDG&E 138 kV loop would be 2,700 feet long and would require six transmission towers. Construction of the transmission towers would result in approximately 0.06 acres of permanent disturbance (with 20 feet by 20 feet for each tower). A new road to access the transmission facilities would not be required. Construction of the proposed SDG&E 138 kV loop would use existing SDG&E access roads that may require upgrades to accommodate construction equipment. It would also require construction of approximately 1,800 feet of new spur roads, which would result in approximately 0.67 acres of permanent disturbance. The proposed SDG&E 138 kV loop would connect the proposed onsite SDG&E 138 kV utility switchyard to the existing 138 kV transmission line that ties into the existing SDG&E Carlton Hills Substation as shown in Figure 1.1-1.

3.1.2 Proposed Project with Alternative 1 SDG&E 138 kV /Loop

Other than the location of the 138 kV loop, the Project with Alternative 1 SDG&E 138 kV loop is the same as the proposed Project. The Applicant does not currently have an easement for the entire Alternative 1 SDG&E 138 kV loop. The length of Alternative 1 SDG&E 138 kV loop is 2,700 feet long and would require eight transmission towers. Construction of Alternative 1 SDG&E 138 kV loop would use the same existing SDG&E access roads as the proposed Project, and would require construction of approximately 2,400 feet of new spur roads, resulting in approximately 0.87 acre of permanent disturbance.

3.1.3 Supplement 2 Project

Supplement 2 described the project in detail in Section 2.0. The Supplement 2 project plant site is the same as the plant site of the proposed Project, except as described in Section 2.0 of this Supplement 3. The Supplement 2 project did not include an onsite SDG&E utility switchyard and related access road and fencing. The footprint of the power plant of the Supplement 2 project was located in the same location as the footprint proposed in the AFC, and 150 feet north of the footprint in the proposed Project. The Supplement 2 project does not include the block walls associated with the relocation of the proposed Project. The configuration of the Supplement 2 project plant site was the same as in the AFC. The 11 stacks were not bundled as they are in the proposed Project and instead the Supplement 2 project's stacks were 100 feet tall and arranged in a single row east to west. The Supplement 2 project's plant site included a septic system with a leach field instead of a septic holding tank. The Supplement 2 project did not include the perimeter fence around the plant site.

The total permanent plant site disturbance associated with the Supplement 2 project was 11 acres, which is 1 acre less than the proposed Project. However, the analysis in the AFC and Supplement 2 assumed temporary disturbance of the entire 21.6-acre site. Therefore, the additional 1.00 acre of disturbance of the proposed Project is located completely within the site that would be temporarily disturbed during construction. The temporary disturbance area for both the Supplement 2 project and the proposed Project would remain the same encompassing the entire 21.6-acre plant site.

The Supplement 2 project would not require the construction of a new SDG&E utility switchyard; but it would require construction of approximately 6,850 feet of 138 kV gen tie to connect the plant site to the existing SDG&E Carlton Hills Substation, as well as minor modifications to the substation as described in Supplement 2. For approximately 4,600 feet, the Supplement 2 project 138 kV gen tie would run adjacent to the SDG&E 138 kV transmission line. The gen tie would be supported by 15 transmission towers, the construction of which would result in 0.14 acres of permanent disturbance. The Supplement 2 project would require construction of approximately 4,130 feet of new access and spur roads (1.52 acres of permanent disturbance). It should be noted that the linear feature lengths for the proposed gen tie and alternative routes presented in Supplement 2 included only the lengths of the new access roads and did not include lengths of spur roads. In order to make an accurate comparison, the lengths of the linear features have been estimated for all alternatives described in this Supplement 3 to account for the lengths of new access road plus new spur roads.

Table 3.1-1 summarizes the estimated amount of permanent disturbance that will result from the proposed Project with proposed SDG&E 138 kV loop, the Supplement 2 project and the Project with Alternative 1 SDG&E 138 kV loop.

Table 3.1-1 Summary of Permanent Disturbance

Project Component	Proposed Project with Proposed SDG&E 138 kV Loop (Supplement 3) Disturbance	Project with Alternative 1 SDG&E 138 kV Loop (Supplement 3) Disturbance	Supplement 2 Project Disturbance
Power Plant Site			
Power plant	12 acres	12 acres	11 acres
SDG&E utility switchyard	1.00 acre (included in the power plant site footprint)	1.00 acre (included in the power plant site footprint)	0 acres (existing 138 kV Carlton Hills Substation)
Access road	1.35 acres (included in the power plant site footprint)	1.35 acres (included in the power plant site footprint)	2.2 acres (included in the power plant site footprint)
Ancillary Facilities			
Natural gas pipeline lateral	2,200 linear feet (1,500 cubic yards of disturbed soil) or 1.26 acres	2,200 linear feet (1,500 cubic yards of disturbed soil) or 1.26 acres	2,200 linear feet (1,500 cubic yards of disturbed soil) or 1.26 acres
Offsite construction laydown area	5 acres	5 acres	5 acres
Power Plant Total	**18.26 acres**	**18.26 acres**	**17.26 acres**
138 kV Loop			
Length of loop and Supplement 2 gen tie (feet)	2,700	2,700	6,850
Length of new access/spur roads (feet)	1,817	2,372	4,130
New roads (acres)	0.67 acres	0.87 acres	1.52

Project Component	Proposed Project with Proposed SDG&E 138 kV Loop (Supplement 3) Disturbance	Project with Alternative 1 SDG&E 138 kV Loop (Supplement 3) Disturbance	Supplement 2 Project Disturbance
Number of transmission towers	6	8	15
Transmission towers (acres)	0.06	0.07	0.14
138 kV Loop Total disturbance (acres)	**0.73**	**0.94**	**1.66**

3.2 COMPARISON OF THE ALTERNATIVES TO THE PROPOSED PROJECT

3.2.1 Comparison of the Proposed Project to Proposed Project with Alternative 1 SDG&E 138 kV Loop

As stated above, the only difference between the Project with Alternative 1 SDG&E 138 kV loop and the proposed Project is the location of the 138 kV loop. The plant site is the same for both the proposed 138 kV loop and Alternative 1 138 kV loop.

Assuming the Applicant was able to construct either 138 kV loop, the impacts associated with Alternative 1 SDG&E 138 kV loop will be similar to the Proposed SDG&E 138 kV loop. The addition of two transmission towers and approximately 600 feet of additional spur roads for the Alternative 1 SDG&E 138 kV loop would equate to a slight increase in the overall disturbance area, but the difference is not enough to change the significance of the impacts. Further, the terrain and habitat found in the areas where the Alternative 1 SDG&E 138 kV loop and the Proposed SDG&E 138 kV loop would be located have similar resources and therefore the impacts to biological resources would not significantly differ. For all other environmental factors, the Project with Alternative 1 SDG&E 138 kV loop would result in impacts equal to the proposed Project.

Regarding engineering/construction feasibility, the Project with Alternative 1 SDG&E 138kV loop would be as feasible as the proposed Project. The Alternative 1 SDG&E 138 kV loop route would require 2 more towers and also has more changes in direction than the proposed Project. This would require slightly more engineering effort and cost than the proposed Project. The Project with Alternative 1 SDG&E 138 kV loop would be subject to slightly greater site grading requirements due to the increased number of towers and the increased length of the spur roads. Therefore, the engineering and construction costs would be slightly higher for the Alternative 1 SDG&E 138 kV loop compared to construction of the Proposed SDG&E 138 kV loop.

3.2.2 Comparison of the Proposed Project to the Supplement 2 Project

Impacts from the Supplement 2 project would be potentially greater than the proposed Project for cultural resources, traffic and transportation, visual resources, biological resources, water resources and soils. Construction of the transmission facilities for the Supplement 2 project would result in approximately 1.58 acres of permanent disturbance, whereas the transmission facilities for the proposed Project would only result in 0.73 acres of permanent disturbance. The increased permanent disturbance for the Supplement 2 project results in potential impacts to cultural resources that would be greater than for the proposed Project. However, there are areas of the proposed Project 138 kV loop that have not been surveyed for cultural resources;

these areas will be surveyed and the results will be docketed under confidential cover at the CEC. It is anticipated that with mitigation, the Project's impacts to cultural resources would be less than significant for any of the alternatives.

The Supplement 2 project would also result in potentially greater traffic and transportation impacts during construction as compared to the proposed Project because construction of three gen tie poles adjacent to the Carlton Hills Substation for the Supplement 2 project would require access from the east, which would consist of 24 round trips of heavy trucks and transportation of construction materials through the residential subdivision. The proposed Project does not require construction of these gen tie poles or any modifications of the Carlton Hills Substation and thus would cause no traffic in the residential subdivision to the east of Carlton Hills Substation. Construction for the SDG&E 138kV loop will be accessed from the plant site via existing dirt roads.

The proposed Project may result in a few additional construction truck trips related to the addition of the utility switchyard. However, because the gen tie to the Carlton Hills Substation would not be built and the truck trips associated with that would not occur, construction truck trips for the proposed Project would be comparable to those for the Supplement 2 project.

There would be minimal difference in the level of traffic during operation of the proposed Project as compared with the projects described in the AFC and Supplement 2. During operations a minimal number of SDG&E workers, in addition to the Project employees, would visit the Project site in connection with the operation and maintenance of the new onsite SDG&E utility switchyard, but these infrequent trips would not affect the proposed Project's impact on traffic during operations. Additionally, the use of the septic holding tank instead of the septic system with leach field would require one additional truck trip per month during operations to pump out the tank. Operation traffic and transportation impacts would be about the same as that of Supplement 2.

Many of the project modifications contemplated in this Supplement 3 were premised on a desire to reduce the impact to visual resources. The reduced height and relocation of the stacks, as well as the block walls, all contribute to the reduced profile of the proposed Project. Therefore, the Supplement 2 Project with its eleven 100-foot stacks arranged in a straight line and a less visually shielded plant site would have resulted in potentially greater visual impacts.

With regard to biological resources, the Supplement 2 project would have a greater impact than the proposed Project. As stated above, the Supplement 2 plant site would result in 1 acre of less permanent disturbance than the proposed Project plant site. The impacts associated with the SDG&E 138 kV loop as compared to the 1-mile long 138 kV gen tie would be substantially lower due to a much smaller facility footprint. With the SDG&E 138 kV loop, areas of special status plants would be avoided including a patch of plantago, which is the host plant for Quino checkerspot butterfly. It would also avoid occupied California gnatcatcher foraging habitat, as well as the landfill conservation area for sensitive plants. Avoidance of these areas reduces potential impacts to biological resources to less than significant levels.

The combination of relocating the plant site 150 feet farther south and co-locating the SDG&E utility switchyard within the proposed Project plant site would change the amount of water required during the grading portion of construction. The estimated peak water usage during construction is approximately 6,520,000 gallons (approximately 20 acre feet) during the grading

and compaction work. This amount is an increase of approximately 1,320,000 gallons or approximately 25 percent from the quantities identified in the AFC.

The water consumed by the power plant operations and personnel would not change with the proposed Project in comparison to the projects described in the AFC and Supplement 2. However, the water required to sustain the power plant landscaping has increased. With refinement of the proposed Project and the type and quantity of plants identified in the preliminary Landscape Plan, an additional allocation of 200 gallons per day (gpd) of water may be required for landscaping. The landscape water is discussed further in Section 4.13.

Moving the main plant site 150 feet to the south and adding the SDG&E utility switchyard northeast of the main plant site area in the proposed Project would result in a number of changes to the general arrangement of the Project and to the original stormwater control measures identified in the AFC. These changes consist primarily of how the stormwater would be handled onsite. Low impact development (LID) design features and best management practices (BMPs) would be used in controlling the stormwater in all cases. In general the design features for the proposed Project and the projects described in the AFC and Supplement 2 would be very similar and are described in Section 4.13.

The construction activities for the proposed Project would remain essentially the same as those described in Section 4.14 of the AFC. The grading required for the proposed Project site would modify the existing contours using and cut and fill techniques to provide a level surface at the elevations for the power plant site and the utility switchyard.

The earthwork quantities for the proposed Project would increase from the quantities identified in the projects described in the AFC and Supplement 2. The estimated quantity of excavated “cut” soil would be 165,000 cubic yards while the quantity of fill material required would be approximately 163,000 cubic yards. The original cut and fill quantity identified in the AFC and Supplement 2 was balanced at a total of approximately 125,000 to 150,000 cubic yards. If the proposed Project cut and fill quantities cannot be balanced onsite, the excess soil, approximately 2,000 cubic yards, would be disposed offsite. There are several disposal options for the excess soil, including the use as daily cover at the landfill adjacent to the site,, or as substitute material at a local quarry. More exact earthwork quantities will be calculated following the preparation of the Final Geotechnical Report.

The potential soil loss due to water erosion during construction was evaluated for the proposed Project. Due to the plant footprint extending 150 feet farther south, the soil profiles and characteristics changed slightly. The estimated soil loss for the proposed Project would be slightly higher than the project described in the AFC. The estimated tons of soil lost without any BMPs would increase by approximately 17 percent, while the soil loss for the no project condition would be approximately 16 percent higher. The soil loss for the proposed Project would be approximately 15 percent higher than for the project described in the AFC.

For all other environmental factors, the Supplement 2 project would result in impacts equal to the proposed Project.

Permitting would be equally or less difficult for the proposed Project as compared to all alternatives with the exception of the Supplement 2 Alternative 3, addressed in Table 3.1-2. Permitting for this alternative would be more difficult because as stated in Supplement 2 Section

3.1.4, Supplement 2 Alternative 3 would require an easement over property owned by San Diego County and would add an additional approval step to the process of acquiring this easement. Neither the proposed Project nor any of the other alternatives would require an easement from a local governmental agency and thus this potential permitting difficulty would not be present.

Regarding engineering/construction feasibility, the engineering/construction requirements for the proposed Project would be greater or equal to the Supplement 2 project and all the Supplement 2 alternatives due to the need for additional cut and fill around the plant site area and SDG&E utility switchyard and the associated grading and compaction requirements. The engineering/construction requirements for the Supplement 2 project and all the Supplement 2 alternatives are greater than or equal to the proposed Project for construction of transmission facilities including access roads, tower construction, and engineering costs because the 138 kV loop is much shorter than the previously proposed gen tie. Additionally, the proposed Project and Alternative 1 SDG&E 138 kV loop do not require construction work within the energized Carlton Hills substation. Supplement 2 Alternative 2 would require construction of an underground transmission line, but the proposed Project and other alternatives do not.

As shown in Table 3.1-2, the Supplement 3 proposed Project has the least number of towers, shortest length of road and smallest combined area of permanent disturbance. All of the Supplement 2 cases have similar estimated areas of disturbance (1.59 to 2.05 acres) which are double the estimated area for the proposed Project. Most of the difference is in the gen tie access road requirements, which were adjusted from the values included in Supplement 2 to include the spur roads needed, not just the main access roads.

Table 3.1-2 summarizes institutional factors, engineering/construction feasibility, length of linear features, and whether the alternatives are feasible or not from an environmental impact perspective, as compared to the proposed Project.

Table 3.1-2 Comparison of the Proposed Project and Alternatives

Characteristic	Proposed Project with 138 kV Loop	Project with Alternative 1 138 kV Loop	Supplement 2 Project	Supplement 2 Alternative 1	Supplement 2 Alternative 2	Supplement 2 Alternative 3
Institutional Factors						
Site control	No	No	No	No	No	No
Ability to obtain required permits	Feasible	Feasible	Feasible	Feasible	Feasible	Less feasible
Engineering/Construction Feasibility						
Underground transmission line required	No	No	No	No	Yes	No
Equal or greater site grading requirements than proposed Project	-	Yes	Yes	Yes	Yes	Yes
Equal or greater engineering costs than proposed Project	-	Yes	Yes	Yes	Yes	Yes

Characteristic	Proposed Project with 138 kV Loop	Project with Alternative 1 138 kV Loop	Supplement 2 Project	Supplement 2 Alternative 1	Supplement 2 Alternative 2	Supplement 2 Alternative 3
Length of Linear Features						
Length of power plant access road to the site (feet)[1]	2,000	2,000	2,000	2,000	2,000	2,000
Length of gas lateral to the site (feet)	2,032	2,032	2,032	2,032	2,032	2,032
Length of new roads[2] (feet)	1,817	2,372	4,130	5,355	4,105	4,350
Total length of linear features (feet)	5,849	6,404	8,162	9,387	8,137	8,382
Environmental Factors[3]						
Cultural resources impacts with mitigation	–	Equal to	Greater than	Greater than	Greater than	Greater than
Land use impacts with mitigation	–	Equal to	Equal to	Equal to	Equal to	Equal to
Noise impacts with mitigation	–	Equal to	Equal to	Equal to	Equal to	Equal to
Traffic and transportation impacts with mitigation	–	Equal to	Greater than	Greater than	Greater than	Greater than
Visual resources impacts with mitigation	–	Equal to	Greater than	Greater than	Greater than	Greater than
Socioeconomics impacts with mitigation	–	Equal to	Equal to	Equal to	Equal to	Equal to
Air quality impacts with mitigation	–	Equal to	Equal to	Equal to	Equal to	Equal to
Public health impacts with mitigation	–	Equal to	Equal to	Equal to	Equal to	Equal to
Hazardous materials handling impacts with mitigation	–	Equal to	Equal to	Equal to	Equal to	Equal to
Worker health and safety impacts with mitigation	–	Equal to	Equal to	Equal to	Equal to	Equal to
Waste management impacts with mitigation	–	Equal to	Equal to	Equal to	Equal to	Equal to
Biological resources impacts with mitigation	–	Equal to	Greater than	Greater than	Greater than	Greater than
Water resources impacts with mitigation	–	Equal to	Less than	Less than	Less than	Less than
Agriculture and soils impacts with mitigation	–	Equal to	Equal to or Less than	Equal to or Less than	Equal to or Less than	Equal to or Less than
Paleontological resources impacts with mitigation	–	Equal to	Less than	Less than	Less than	Less than
Geological hazards and resources impacts with mitigation	–	Equal to	Equal to	Equal to	Equal to	Equal to

Notes:

1. The offsite gas lateral and the offsite power plant access road are sited along the same route for each of these alternatives.
2. These lengths include the length of the gen tie road for the Supplement 2 alternatives and spur roads to each transmission tower for all alternatives.
3. Environmental impacts of alternative sites categorized as greater than, equal to, or less than the proposed Project.

4.0 ENVIRONMENTAL INFORMATION

The subsections in Section 4.0 of the Project AFC and Supplement 2 to the AFC provide the information for the 16 environmental, public health and safety, and local impact assessment disciplines required by the CEC, Energy Facilities Siting Regulations (Title 20, California Code of Regulations, Section 1704, Appendix B).

Unless otherwise identified in this Supplement 3, it is assumed that for each of the 16 disciplines, there is no change to the Affected Environment, Significance Criteria, Mitigation Measures, and Laws, Ordinances, Regulations and Standards sections of the AFC and Supplement 2 as a result of the changes to the proposed Project, including the modified plant layout, reconfiguration and shortening of the stacks, the addition of the onsite SDG&E utility switchyard, or the 138 kV loop. The focus of this section is to provide an analysis of the potential environmental consequences of the construction and operation of the proposed Project as described in Section 2.0 of this Supplement 3.

4.1 CULTURAL RESOURCES

As reported in the AFC, the cultural resources survey conducted on May 16 and 17, 2011 did not identify any previously unrecorded cultural resources within the AFC APE. Previously recorded cultural resources identified as within the AFC APE were either found to have been destroyed or could not be relocated.

Because ground surface visibility was very poor due to heavy vegetation cover, the CEC and City of San Diego requested that additional cultural resources work be conducted according to a protocol approved by both agencies. The method chosen was to clear vegetation by hand in 1 meter by 1 meter plots on a 15-meter grid across the Project area.

Supplement 2 to the AFC modified the APE to include the long 138 kV gen tie route to the Carlton Hills Substation. portions of the Supplement 2 138kV gen tie and alternatives were surveyed during additional field work undertaken by Tetra Tech and two Native American monitors from January 2, 2012 through January 13, 2012. Portions of the 138 kV corridors were not surveyed because landowners had not approved access to their land for this purpose. The survey for the proposed 138kV gen tie, Alternative 2 138kV gen tie and Alternative 3 138kV gen tie included a 300-foot wide corridor because the proposed ROW abuts the existing ROW and the intent was to mirror the existing pole locations. The survey for the Alternative 1 138 kV gen tie included a 400-foot wide corridor because a portion of this alternative would cross an undeveloped area and the wider buffer provides more flexibility in siting pole locations.

Based on the preliminary findings of the supplemental surveys carried out along the gen tie as described in Supplement 2, that resulted in 4 new isolated finds and 2 new sites being recorded, the potential impacts to cultural resources as a result of the 138 kV gen tie and laydown area were not anticipated to be significantly different that those previously described in Section 4.1 of the AFC. None of the resources recorded during the supplemental surveys is eligible to either the state or federal Registers of Historic Places.

An addendum to the original cultural resources technical report that was filed under confidential cover with the AFC was prepared for the Supplement 2 APE and provided to the CEC under confidential cover on February 16, 2012.

Additional survey work was undertaken for the Supplement 2 project as access to more parcels was granted by landowners. A second addendum to the cultural resources survey report was docketed under a request for confidentiality on April 24, 2012. The survey identified four previously unidentified archaeological sites and eleven previously unidentified isolates. The two previously recorded archaeological sites within the survey area, CA-SDI-13576 (P-37-013576) and CA-SDI-13593 (P-37-013593), were also located. All other previously recorded cultural resources within the survey area could either not be found (P-37-14101, P-37-15411, P-37-16213, and P-37-16215) or were in inaccessible areas (P-37-16210). One previously recorded site (CA-SDI-13576), two newly recorded sites (TEMP-QB-3 and TEMP-QB-4), and two newly recorded isolates (TEMP-QB-ISO-9 and TEMP-QB-ISO-10) were within the Supplement 2 APE. The Sycamore Landfill was identified and documented as an architectural resource. None of the resources recorded during the supplemental surveys is eligible to either the state or federal Registers of Historic Places.

This Supplement 3 presents a revised APE for the proposed Project including the 138 kV loop from the plant site to the existing 138 kV transmission line corridor instead of the previously surveyed 138 kV gen tie to the Carlton Hills Substation presented in Supplement 2. Because Cogentrix did not have access to parcel number 36608028 during previous survey efforts, a portion of this parcel along the western parcel boundary where the 138 kV is proposed will have to be surveyed. It is anticipated that this work will occur during the month of September 2012. An addendum to the cultural resources technical report will be provided to present the results of this field survey. The survey will be conducted using the previously approved protocol.

Impacts to cultural resources on the 21.6-acre plant site would be the same as those described in the AFC, as the entire plant site would be temporarily disturbed. The change in the APE for the proposed Project 138 kV loop would result in the avoidance of six isolates and three sites recorded during the previous Supplement 2 field efforts. Therefore, the known impacts associated with the proposed 138 kV loop would be less than those of the Supplement 2 138 kV gen tie. Portions of the ROWs for the proposed 138 kV loop and Alternative 1 were surveyed in support of the gen tie described in Supplement 2. However, access to parcel number 36608028 was denied and therefore no cultural resources survey was carried out there. Both alternatives would now have the potential to be located on or adjacent to this parcel, and as noted above, a survey will be conducted.

4.2 LAND USE

The proposed Project's potential impacts to land use would be the same as those of the projects described in the AFC and Supplement 2. Section 4.2 of the AFC stated that the project would be inconsistent with the current City of San Diego zoning, and land use designation in the East Elliott Community Plan and General Plan (AFC 4.2-14). The project modifications do not change this inconsistency and therefore the proposed Project will still require the same community plan amendment and zone change from the City of San Diego as contemplated in the AFC.

4.3 NOISE

The acoustic modeling analysis was updated to reflect the Supplement 3 modifications and additional facility design information that has become available subsequent to the submittal of the AFC Supplement 1 and Supplement 2. The location of all equipment was taken from Power Plant site plan layout drawings dated August 1, 2012. The refined analysis also incorporated

more detailed site plans and Project design information, which was only at a schematic level when the AFC was being prepared. These drawings were coordinated with USGS digital terrain files, aerial photos and available site plan grading information.

Pertinent changes relevant from a noise perspective that were incorporated into the updated acoustic analysis include the following:

- Shift of the Plant site 150 feet to the south of the original site;
- Under Cal OSHA's requirements, the noise levels from the engine packages must not exceed 85 dBA in worker areas. To meet this requirement, the packages would have to be equipped with acoustic enclosures. Because the original Engine Hall Building was designed to house the engines with no acoustic enclosures, the enclosures are relatively small for the enclosed driver package;
- Building treatments that were modified in the refined modeling included replacement of the existing roof vents with silenced vents, and installation of noise attenuating hoods over the building louvers. Each roll-up door was modeled as a completely weather stripped 22 gauge insulated type design (e.g., 22 gauge exterior with a 24 gauge backskin with acoustical insulation core);
- Inclusion of the utility switchyard 5 MVA transformer and acoustic modeling of the updated routing option of the 138 kV loop;
- Change in arrangement, location and exit height of the Power Plant exhaust stacks and extension of breach stacks;
- Modifications to the dimensions of the Power Plant equipment to reflect changes in updated site plan CAD drawings;
- The fuel gas heaters and gas metering station will be contained within acoustical buildings; and
- Inclusion of a 10-foot high block wall, berming, and retaining walls associated with the relocation of the proposed Project and gradation changes within the site boundary.
- Retention ponds were also added to the model.

Consistent with methodology used in the AFC submittal, the operational acoustic assessment was performed using Datakustik GMBH CadnaA software (version 4.2.141), which allows the facility and its surroundings to be realistically recreated in three dimensions as illustrated in the 3-Dimensional rendering below. CadnaA conforms to International Standard ISO-9613.2, "Acoustics – Attenuation of Sound during Propagation Outdoors". The method evaluates A-weighted sound pressure levels under meteorological conditions favorable to propagation from sources of known sound emission. A three-dimensional rendering of the Power Plant inclusive of the Supplement 3 changes is given in Figure 4.3-1. A number of the major Project noise components are identified in Figure 4.3-1.

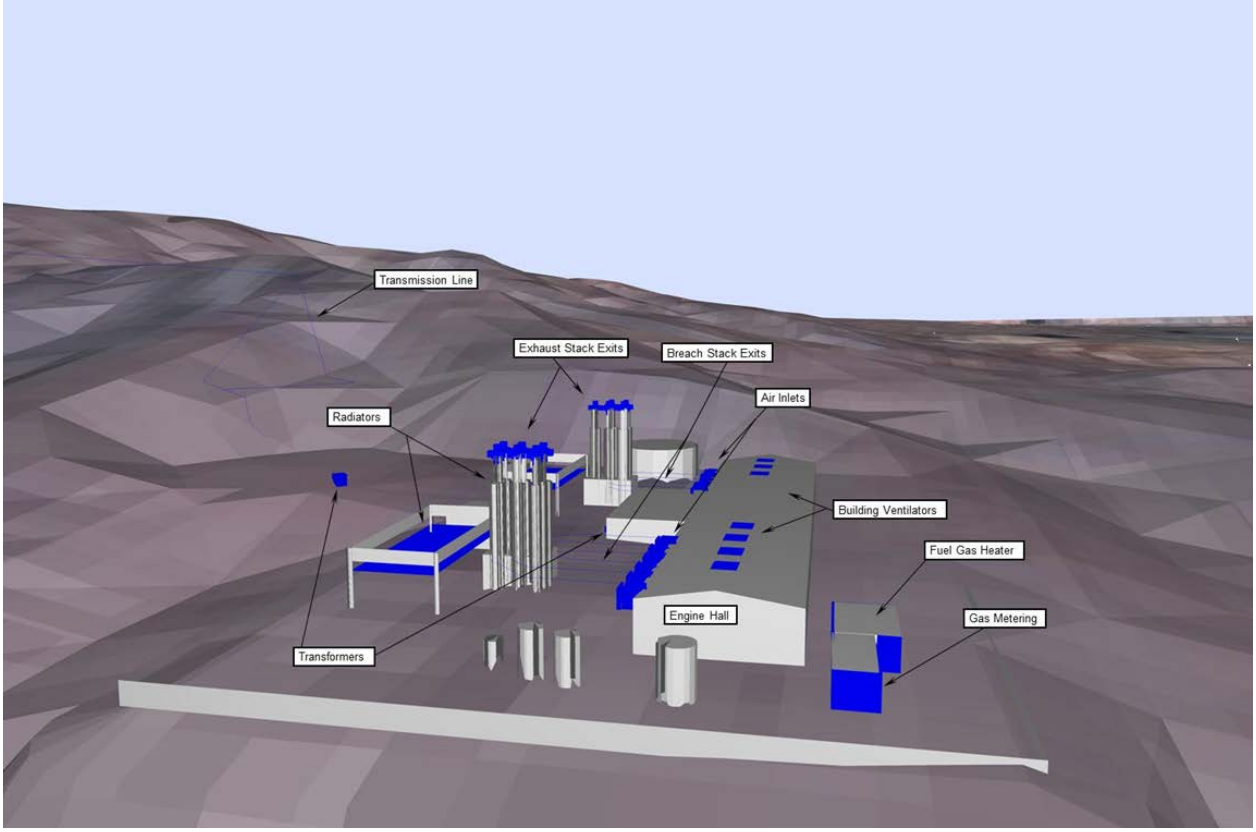

Figure 4.3-1 3-Dimensional Rendering of Noise Model Input Data (Viewpoint: – Looking East towards Power Block)

The results of the refined acoustic modeling analysis are presented in Table 4.3-1. Results are also displayed visually in the form of sound contours in Figure 4.3-2.

Table 4.3-1 Summary of Power Plant Acoustic Modeling Results under Supplement 3

Receptor	Baseline Level, dBA	Supplement 3, dBA	Cumulative Level, dBA	Cumulative Increase, dBA
ST-1	44	34	44	< 1
ST-2	45	40	46	1
ST-3	38	29	38	< 1
ST-4	34	32	36	2
ST-5	51	44	52	1
LT-1	45	36	45	< 1

Since the cumulative increase in noise level at all locations will be less than 5 dBA at any single residential receptor location, no adverse impact is expected due to the normal operation of the facility under the Supplement 3 project description. Changes from the Project as described in the AFC, including the shift of the plant 150 feet to the south and reduced stack height, has been demonstrated not to result in substantive increases in noise levels.

Construction Noise Impacts

As described in the discussion of gas pipeline construction in the AFC, horizontal-directional-drilling (HDD) may be employed at the Mast Boulevard crossing. If HDD is required, the equipment used varies somewhat depending on various conditions. All activities, except

potentially the pipe pullback, would be performed during daylight hours at one estimated entry location. Table 4.3-2 presents the typical sound pressure level data for equipment required for HDD operations using a composite construction noise spectrum by octave band center frequency.

Table 4.3-2 HDD Composite Sound Spectrum Levels at a Reference Distance of 50 Feet

	Octave Band Sound Power Data (dBL)									Broadband (dBA)
	31.5	63	125	250	500	1k	2k	4k	8k	
HDD Operations	93	94	90	84	82	81	78	77	76	85

A screening level acoustic modeling analysis was conducted using CadnaA to estimate the received sound levels at nearby noise sensitive receptors due to the HDD equipment. The results are tabulated in Table 4.3-3 and are also presented as contour dBA isopleths on Figure 4.3-3.

Table 4.3-3 Summary of HDD Acoustic Modeling Results under Supplement 3

Receptor	Supplement 3, dBA
ST-1	35
ST-2	60
ST-3	11
ST-4	23
ST-5	31
LT-1	35

These received sound level estimates are for informational purposes only. Except for emergency work, according to the San Diego Code, it shall be unlawful for any person to operate
construction equipment or cause construction equipment to be operated, that exceeds an average sound level of 75 decibels for an eight-hour period, between 7 a.m. and 7 p.m., when measured at the boundary line of the property where the noise source is located or on any occupied property where the noise is being received. Candidate mitigation measures include temporary noise barriers, enhanced mufflers, or engine enclosures, which can reasonably achieve a 10 dBA reduction.

The change in the Plant layout is not anticipated to result in any further changes to construction-related noise levels because the equipment mix needed to build the revised layout would be similar to that previously described in the AFC and Supplement 2. Construction of the proposed 138 kV loop would also be expected to employ the same types of equipment during construction. However, because fewer towers would be required for the 138 kV loop, the ROW the loop would be located in is farther from potential sensitive receptors, and there would be no truck traffic through the neighborhood bordering the Carlton Hills Substation. The noise impacts associated with construction of the 138 kV loop would be less than those described in the AFC and Supplement 2.

It is concluded that potential noise impacts as a result of the construction and operation of the proposed Project changes presented in Section 3.0 of this Supplement would be essentially the

same as those described in Section 4.3 of the AFC because the proposed Project has not substantively changed from the Project as described in the AFC.

4.4 TRAFFIC AND TRANSPORTATION

There would be minimal difference in the level of traffic during operation of the proposed Project as compared with the projects described in the AFC and Supplement 2. The project modifications do not change the operation of the plant facility. During operations a minimal number of SDG&E workers in addition to the Project employees would visit the Project site in connection with the operation and maintenance of the new onsite SDG&E utility switchyard. These visits would be expected to be irregular and not to occur during peak traffic times. Due to the small number of infrequent additional trips generated by the proposed Project, the proposed Project's impact on traffic during operations will not change.

The overall level of construction traffic for the proposed Project would not change from that contemplated in the AFC or in Supplement 2. While the proposed Project calls for additional earthwork due to the construction of the onsite SDG&E utility switchyard, this activity would take place entirely onsite using equipment that would have already been mobilized. Truck traffic required to haul away excess cut is more than offset by the reduction in construction water truck traffic due to the use of Padre Dam recycled water located in close proximity to the proposed Project site. Refer to Section 4.4 Water Resources for a discussion of Padre Dam recycled water usage. Additionally, as discussed in Section 3.1.3 of this Supplement 3, because the approximately 6,850-foot 138 kV gen tie that was described in Supplement 2 would no longer be constructed, access from east of the existing SDG&E Carlton Hills Substation to construct three of the gen tie poles adjacent to the substation and to make modifications to the Substation would not be required. This change would eliminate the need to route construction traffic through the residential subdivision that is east of the Substation. Considering this reduction in construction traffic, the short term nature of the construction period, the strict adherence to an approved Traffic Management Plan and other mitigation measures (described in Section 4.4 of the AFC), it is expected that impact of the proposed Project's construction on traffic and transportation will remain less than significant.

4.5 VISUAL RESOURCES

The AFC (11-AFC-03) indicated that the proposed Project would not be expected to have significant visual impacts and that visual change was expected to be low to moderate as assessed from KOP 1. However, the Applicant has reduced the potential visual impacts of the proposed Project through the updates addressed in this Supplement 3. The proposed changes include relocating the power plant 150 feet to the south from the previously proposed location within the 21.6-acre plant site to accommodate the construction of the SDG&E 138 kV utility switchyard in the northeast corner of the property.

Other changes to the power plant that may affect visual resources include modifications to the proposed stacks, which would be arranged in two bundles (one bundle of 6 stacks and one bundle of 5 stacks). The previous arrangement had the stacks in a single east-west line. The height of the stacks would be reduced to 70 feet, which would reduce the visible profile of the facility. Project features other than the stacks would have a height below 50 feet. The stack height change paired with stack bundling will all serve to reduce overall visual impacts.

The change in plant footprint would also include 10-foot high block walls that would screen the plant from some views. This change would serve to further reduce the visual impacts of the proposed Project.

The new landscaping plan would include recontouring of the topography, construction of block walls, and installation of native vegetation adjacent to the plant. Therefore, the anticipated views of the plant's industrial features would be further reduced as compared to the previous landscape condition simulated in the AFC.

The structure types for the 138 kV loop would be single circuit or double circuit steel mono-pole design with phase conductors arranged vertically. Suggested mitigation would include using corten steel in order to make structures blend better with landscape back drop but with some skylines views the corten may not lower current visual impact levels further than currently proposed. The current untreated steel mono poles are simulated as painted corten brown.

The proposed 138 kV loop would be substantially shorter in length and a new access road would not be constructed. However, the existing road would be improved and new spur roads from the existing road would be required. The proposed 138 kV loop ROW would be visible as it follows the ridge up to the existing SDG&E 138 kV transmission line and some towers would be seen from the KOP.

The change from the 1-mile long 138 kV gen tie and access road from the plant site to the Carlton Hills Substation, to the proposed 138 kV loop, would reduce potential visual impacts for receptors in the area surrounding the substation because those towers would not be constructed.

While the proposed Project is not expected to have significant visual impacts, these project changes are provided to ensure compliance with San Diego County guidelines and to lower visual impacts as much as possible through design.

The landscape architect for the project is familiar with the landscaping requirements of the City of San Diego. The resulting landscaping plan prepared by the landscape architect will be provided under separate cover when complete. The primary vegetation chosen to screen the project would include four locally common chaparral species: Lemonadeberry (Rhus integrifolia), Toyon (Heteromeles arbutifolia), Scrub Oak (Quercus dumosa), and Laurel Sumac (Malosma laurina). Along drainage features, Mulefat (Baccharis salicifolia) and Elderberry (Sambucus mexicana) would be used. Lastly, Sycamore (Platanus racemosa) would be planted along the drainage below the developed footprint of the project and upstream of the landfill access road. A variety of other smaller native plants would be established via hydroseed to provide erosion control and fill in the spaces between the larger species.

To evaluate the proposed modifications identified in this Supplement 3 a new simulation from KOP 1 illustrating the Project (Figure 4.5-1) was developed and compared to the existing conditions photography and to the simulations from the original AFC document. While modifications of the Project components have been proposed, the only changes with sufficient visual scale or contrast to be noticeable in the simulation is the change in the height of the proposed stacks, the landscaping elements, and the color palette used for Project structures in relation to KOP 1. It should be noted that the criteria for impact susceptibility, severity, and

significance is consistent with the original AFC and is anticipated to be lower than original impact levels. Noteworthy issues regarding the landscaping plan are outlined below:

KOP 1: The new proposed Project location and design as well as the planting plan would make the landscape around the power plant appear more natural by mitigating landscape disturbance from construction thereby making the power plant less visible. The color of the vegetation and colors used for the structures would reduce the overall contrast of the proposed Project and ancillary facilities (Figure 4.5-1). The low to moderate impacts as assessed in the original AFC filing should be lowered to a low overall impact level as assessed from KOP 1. The following mitigation measure would further reduce potential impacts.

VIS-1. Use corten steel in order to make transmission structures blend better with the landscape back drop.

4.6 SOCIOECONOMICS

The proposed Project's potential socioeconomic impacts would be the same as those of the project described in the AFC and Supplement 2. The modifications to the Project described in this Supplement 3 would not change the construction and operational workforce, anticipated expenditures, or estimated tax revenues. Impacts on public services and utilities would also be unchanged even though the proposed Project would use a septic holding tank instead of a septic system with leach field. Section 4.6 of the AFC concludes that there would be no significant adverse impacts to the socioeconomic environment resulting from the Project (AFC 4.6-23). The Project description changes do not result in any socioeconomics changes for the Project and therefore the socioeconomic impacts of the proposed Project would remain less than significant.

4.7 AIR QUALITY

Due to the changes in site location, stack arrangement, stack locations, and stack heights, the air quality impact analysis is being revised to incorporate these changes. The revised analysis will, similar to the previous analysis, evaluate the air quality impacts on state and federal air quality standards, significant impact levels, visibility, assessment of impacts on soils and vegetation, cumulative impacts, PSD increment and NAAQS impacts. This air quality modeling and analysis supporting the changes to the proposed Project are in preparation and will be docketed with the CEC by September 24, 2012.

4.8 PUBLIC HEALTH

Due to the changes in site location, stack arrangement, stack locations, and stack heights, the public health impact analysis is being revised to incorporate these changes. The revised analysis will, similar to the previous analysis, evaluate the short and long term impacts of the identified air toxic pollutants associated with the project in terms of acute and chronic impacts, as well as cancer risk to the exposed population, including sensitive receptors. This public health analysis supporting the changes to the proposed Project is in preparation and will be docketed with the CEC by September 24, 2012.

4.9 HAZARDOUS MATERIALS HANDLING

Differences in quantities of construction equipment required for the Proposed Project would be minor compared to the AFC and Supplement 2; therefore quantities of hazardous material quantities during construction operations would be the same as that reported in the AFC.

The Supplement 2 project would have the same quantities of hazardous material onsite at any given time during operations as that proposed in the AFC. The proposed Project would have the utility switchyard co-located on the plant site that would require a transformer containing 500 gallons of insulating oil: however this additional quantity would not exceed the maximum onsite quantity reported in Table 4.9.4 of Section 4.9 of the AFC.

In general, while there may be a slight increase in the hazardous materials used or stored on the plant site during operations of the Proposed Project, it is not anticipated to be of such quantities that would result in an increase in potential hazardous materials handling impacts. Handling of hazardous materials for the Proposed Project, specifically insulating oil, would be essentially the same as that described in Section 4.9 of the AFC.

4.10 WORKER HEALTH AND SAFETY

Potential impacts to worker health and safety as a result of the proposed Project described in this Supplement would be the same as those described in Section 4.10 of the AFC and Supplement 2 as the construction and operation methods for the proposed Project has not substantively changed from the Project as described in the AFC. In response to CEC data request 74, Quail Brush has prepared a draft Wild Fire Emergency Action Plan that was docketed with the CEC on July 9, 2012.

4.11 WASTE MANAGEMENT

The proposed Project would include the use of a septic holding tank that would require regular emptying, as opposed to the previously proposed septic system including a leach field. The waste that would be pumped from the septic holding tank would be properly disposed of by a licensed contractor at an appropriate disposal facility.

Potential impacts to waste management as a result of the proposed Project described in this Supplement would otherwise be the same as those described in Section 4.11 of the AFC and Supplement 2. The amount and method for handling all other waste remains the same as described in the AFC.

4.12 BIOLOGICAL RESOURCES

The spring 2012 biological resources surveys of the entire proposed Project including the SDG&E 138 kV loop and Alternative 1 SDG&E 138 kV loop were completed in spring 2012 using the survey protocols that were approved by the appropriate agencies in 2011. Survey protocols for sensitive species that are mandated by USFWS and CDFG were also employed by qualified biologists. The Quino checkerspot butterfly protocol survey report was docketed with the CEC on June 1, 2012. The California gnatcatcher survey report was docketed on July 12, 2012. The sensitive plant species report was docketed with the *Biological Resources Survey Report, Cogentrix Quail Brush Generation Project, City of San Diego, San Diego County, California* on August 7, 2012. *Appendix F* of this report that included additional maps was docketed on August 24, 2012.

The impacts associated with the proposed plant site described in this Supplement 3 would be the same as those identified in the assessment of the proposed plant site provided in the AFC and Supplement 2. The impacts associated with the development of the plant site with the SDG&E utility switchyard would not change because it was assumed that the entire 21.6-acre parcel would be temporarily disturbed. The comparison of Supplement 2 and Supplement 3 permanent impacts are presented in Table 3.2-1 of this Supplement 3.

The impacts associated with the SDG&E 138 kV loop as compared to the 1-mile long 138 kV gen tie would be substantially lower due to a much smaller facility footprint. With the SDG&E 138 kV loop, areas of special status plants that were identified during the 2012 survey season and that would have been impacted by the Supplement 2 gen tie would now be avoided. This includes the only patch of plantago identified during sensitive plant surveys, which is the host plant for Quino checkerspot butterfly. It would also avoid occupied California gnatcatcher foraging habitat, as well as the landfill conservation area for sensitive plants. The proposed 138 kV loop would avoid some areas containing barrel cactus and variegated dudleya that would have been impacted by the Supplement 2 gen tie, thereby reducing the impacts to these species. The reduction in impacts to overall vegetation communities, including coastal sage scrub, would also be greatly reduced. The only sensitive species found during the survey of the proposed 138 kV loop were California barrel cactus and variegated dudleya. The results of the 2012 spring surveys were provided in the biological resources technical report that was docketed with the CEC on August 7, 2012. This report provides specific information relative to overall biological resources impacts of the proposed Project.

4.13 WATER RESOURCES

Potential impacts to water resources as a result of the proposed Project described in this Supplement would be essentially the same as those described in Section 4.13 of the AFC as the Proposed Project has not substantively changed from the Project as described in the AFC.

The combination of relocating the plant site 150 feet farther south and co-locating the SDG&E utility switchyard within the proposed Project site will change the amount of water required during the grading portion of construction. The estimated peak water usage during construction is approximately 6,520,000 gallons (approximately 20 acre feet) during the grading and compaction work. This amount is an increase of approximately 1,320,000 gallons, or approximately 25 percent from the quantities identified in the projects described in the AFC and Supplement 2.

Construction water use will be greatest during the first 3 months, when site grading is scheduled. As shown in Table 4.13-1, peak water use during construction (58,000 gallons per day [gpd]) is based on 40 gallons of water per cubic yard of fill and 163,000 total cubic yards of fill soil. For remaining construction water uses, approximately 8,000 gpd will be required to build the gas line, plant site, gen-tie, and switchyard, with total construction water consumption being 75,000 gpd at the peak.

Table 4.13-1 Water Usage Rates for the Proposed Project

Water Use	Average Daily Rate (gpd)	Peak Daily Rate (gpd)	Annual Rate (afy)	Average Daily Rate (gpd)	Peak Daily Rate (gpd)	Annual Rate (afy)
	Proposed Project			Supplement 2 Project		
Construction						
Plant Site/Gen tie/Gas Lateral/ Switchyard Construction	12,000	75,000	13	8,000	58,000	9.0
Operations						
Fire Suppression[1]	0	0	0	0	0	0
Closed Cooling Water (Engine)	202	259	0.2	202	259	0.2
Turbocharger Washing (Engine)	101	130	0.1	101	130	0.1
Plant Uses	562	720	0.6	562	720	0.6
Sanitary Uses	374	475	0.4	374	475	0.4
Miscellaneous Uses[2]	488	488	0.3	288	288	0.3
Total	**1,527**	**2,072**	**1.9**	**1,440**	**1,872**	**1.6**

Notes:

[1] Fire suppression water usage rates of 0.00 gpm are shown because the Project will not require ongoing water use for fire suppression. Instead, a 600,000-gallon fire water storage tank will be filled once and maintained onsite.

[2] Miscellaneous uses include washing, landscape maintenance, etc. Landscaping use during the initial several years may increase these quantities. A more definitive quantity of the landscape water requirements will be available after the Landscape Plan is finalized.

Discussions have taken place with the Padre Dam Municipal Water District about the use of recycled water for construction activities. This water would be suitable for many construction-related activities such as soil conditioning during grading and compaction. By providing a temporary construction water storage tank onsite, a large percentage of the Project's water demand of 20 acre feet could be supplied from the recycled water line along Sycamore Landfill Road near the Project site. This water tank could refill primarily during off hours, to minimize and balance the load on the recycled water system during daytime hours. Due to its proximity, this would be the preferred source of water during the 18-month construction process.

Since recycled water will not be permissible for all construction uses, construction water will also be supplied from the City of San Diego Municipal Water Department under a temporary water use permit via one of the nearby fire hydrants located off of Mission Gorge Road, between Golfcrest Drive and Jackson Drive. If these locations are unavailable, another suitable hydrant will be selected. Cogentrix (2011) has contacted the City of San Diego to confirm that construction water for the project may be obtained by submitting a fee with a permit application for the hydrant connection, and subsequent payment for the volume of water used. The permit remains in effect for 1 year but can be renewed if necessary.

Preliminary estimates indicate that recycled water may be utilized for as much as 50 percent of the construction water required for the proposed Project. This will reduce the frequency of water-truck trips to the City's fire hydrant substantially. Therefore, even though the total quantity of water required has increased from the quantities identified in the projects described in the AFC and Supplement 2, the demand on the potable water supply should be reduced by the quantity offset by the recycled water use.

Once the power plant begins operation, there will be two primary water uses: water for the operating equipment and plant personnel, and water for irrigation of the landscaping. The water

consumed by power plant operations and personnel will not change with the proposed Project in comparison to the projects described in the AFC and Supplement 2. However, the water listed as Miscellaneous Uses includes water for landscaping has increased. Based on the type and quantity of plants identified in the preliminary Landscape Plan, an additional 200 gpd of water may be required for landscaping. This additional quantity is included in the Miscellaneous Uses category of Table 4.13-1 and was added because the Applicant has been able to produce a more refined landscape design than when previous plans were submitted. This additional water would have been included in more refined drafts of the original plans and documents.

Relocating the main plant site 150 feet to the south and adding the SDG&E utility switchyard northeast of the main plant site area results in a number of changes to the general arrangement of the Project and to the original stormwater control measures identified in the AFC. In accordance with the City of San Diego's requirements, a Water Quality Technical Report and Hydromodification Plan are under development.

Appropriate low impact development (LID) features and best management practices (BMPs) are being incorporated into the design. BMPs include such items as isolated areas for loading/unloading of the chemical storage tanks and secondary containment structures to prevent releases from equipment and tanks from being carried in the stormwater. Landscaping with appropriate native plants (as possible within the fire safety zones) will help stabilize slope areas. LID features may include flow through planters, bioretention areas and detention ponds. Roof drains will be diverted through planters and/or bioretention areas prior to discharge. Offsite stormwater flows will be diverted around the plant site to avoid comingling the flows.

The San Diego BMP Sizing Calculator has been used to identify the appropriate LID features and BMPs to adequately control the desired storm event quantities and treatment for quality as well. In the control features, detention ponds and bioretention areas provide the most likely candidates for implementation. The stormwater runoff from the areas where vehicles will be present may contain trace levels of oil and grease, from drips off of vehicles or equipment.

To provide flexibility for future changes, the general arrangement shown on the Site Plan will use the aerial footprint for whichever control measure (i.e., bioretention area or detention pond) requires the larger footprint. This will allow sufficient room for either control measure. The LID features and BMPs identified are not actually new features since these would have been included in more refined drafts of the original plans. They are included now because the Applicant is able to produce a more refined Project design than when previous plans were submitted.

The Water Quality Technical Report and Hydromodification Plan will present the hydrologic and hydraulic changes in detail and will be submitted under separate cover. The proposed Project will require additional water during construction but the use of recycled water for a portion of this work will actually reduce the demand on the potable water supply. Approximately 0.2 acre feet per year of additional landscaping water will used during the power plant operations. Therefore, the proposed Project will result in a slight increase in water use from that described in the AFC and Supplement 2. The impacts on stormwater would be the same as those in the AFC and Supplement 2.and would be less than significant with mitigation and use of appropriate BMPs.

4.14 AGRICULTURE AND SOILS

The construction activities for the Proposed Project will remain essentially the same as those described in Section 4.14 of the AFC, just shifted 150 feet towards the south. The grading required for the Proposed Project site would modify the existing contours using cut and fill techniques to provide a level surface at the elevations for the power plant site and the utility switchyard.

The preliminary grading plan (Figure 4.14-1) includes the finished grade elevations and preliminary contour lines across the entire plant site. The combination of relocating the plant site 150 feet farther south and co-locating the SDG&E utility switchyard within the proposed Project site increased the estimated earthwork quantity slightly.

The earthwork quantities for the proposed Project will increase from the quantities identified in the projects described in the AFC and Supplement 2. The estimated quantity of excavated “cut” soil would be 165,000 cubic yards while the quantity of fill material required would be approximately 163,000 cubic yards. The original cut and fill quantity identified in the AFC and Supplement 2 was balanced at a total of approximately 125,000 to 150,000 cubic yards. If the proposed Project cut and fill quantities cannot be balanced onsite, the excess soil, approximately 2,000 cubic yards, will be disposed offsite. There are several disposal options for the excess soil, including the use as daily cover at the neighboring landfill, or as substitute material at a local quarry. More exact earthwork quantities will be calculated following the preparation of the Final Geotechnical Report.

Due to the plant footprint shifting 150 feet farther south, the soil profiles and characteristics changed slightly. A preliminary estimate of soil loss by water erosion during construction was evaluated using the Revised Universal Soil Loss Equation (RUSLE2) software (NRCS 2002) for comparison with the soil loss estimated for the projects described in the AFC and Supplement 2. The soil loss was calculated as tons/acre/year by the program and then multiplied by the site feature acreage and assumed construction period to get total soil loss in tons for the proposed Project duration.

The estimated soil loss for the proposed Project was slightly higher than the project described in the AFC. The estimated soil lost (in tons) was identified for construction without the use of any construction BMPs, with construction BMPs, and the soil loss with no project. The estimated soil loss for the proposed Project and the AFC and Supplement 2 projects is shown in Table 4.14-1. Construction of the proposed Project would be performed using a variety of BMPs designed to minimize the potential loss of soil. The soil loss for the proposed Project (8.5 tons) was approximately 15 percent higher than for the project described in the AFC. These values show that the project location has the potential to influence the soil loss. Once more site-specific information on the soil types and aerial extents is available from the Final Geotechnical Report, it will be possible to provide more detail about the potential for soil loss.

Table 4.14-1 Estimate of Soil Loss by Water Erosion Using Revised Universal Soil Loss Equation (RUSLE2)

Activity on 21.6-acre site	Proposed Project			AFC/Supplement 2 Projects		
	Soil Loss (tons) without BMPs	Soil Loss (tons) with BMPs	Soil Loss (tons) No Project	Soil Loss (tons) without BMPs	Soil Loss (tons) with BMPs	Soil Loss (tons) No Project
Grading	147.4	1.3	0.5	128.3	1.1	0.4
Construction	266.9	7.2	3.2	225.5	6.3	2.8
Project Soil Loss Estimate	414.3	8.5	3.7	353.8	7.4	3.2
Percent Change	17%	15%	15.6%	—	—	—

Potential impacts to agriculture resources as a result of the Proposed Project described in this Supplement would be equal to or slightly greater than those described in Section 4.14 of the AFC as the Proposed Project has changed from the Project as described in the AFC.

4.15 PALEONTOLOGICAL RESOURCES

The proposed Project has not substantially changed from that described in Supplement 2 with the exception of the shorter 138 kV loop. The ROW for the proposed 138 kV loop and Alternative 1 138 kV loop are within the area previously surveyed for paleontological resources. Potential impacts to paleontological resources as a result of the proposed Project described in this Supplement would be less than those described in Section 4.15 of the AFC due to the overall reduction in disturbance area associated with the proposed Project.

4.16 GEOLOGICAL HAZARDS AND RESOURCES

The proposed Project has not substantially changed from that described in Supplement 2 with the exception of the shorter 138 kV loop. The ROW for the proposed 138 kV loop and Alternative 1 138 kV loop are within the area previously evaluated for geological resources. Potential impacts to geological resources as a result of the proposed Project described in this Supplement would be the same as those described in Section 4.16 of the AFC as the proposed Project has not substantively changed from the Project as described in the AFC.

4.17 CUMULATIVE IMPACTS

The proposed Project has not substantially changed from that described in Supplement 2 with the exception of the shorter 138 kV loop and the cumulative impacts would be the same as those described in Section 4.17 of the AFC as the proposed Project has not substantively changed from the Project as described in the AFC. However, for the following issue areas there are differences that may positively or negatively reflect on cumulative impacts.

Impacts to cultural resources on the 21.6-acre plant site would be the same as those described in the AFC, as the entire plant site would be temporarily disturbed. The change in the APE for the proposed Project 138 kV loop would result in the avoidance of six isolates and three sites recorded during the previous Supplement 2 field efforts. Therefore, the known impacts associated with the proposed 138 kV loop would be less than those of the Supplement 2 138 kV gen tie and the proposed Project's incremental contribution to cumulative impacts would be reduced.

Considering this reduction in construction traffic, the short term nature of the construction period, the strict adherence to an approved Traffic Management Plan and other mitigation measures (described in Section 4.4 of the AFC), it is expected that the incremental contribution to impacts from the proposed Project on construction traffic and transportation will remain less than significant.

The new proposed Project location and design as well as the planting plan would make the landscape around the power plant appear more natural by mitigating landscape disturbance from construction, thereby making the power plant less visible. The color of the vegetation and muted color tones used for the structures would reduce the overall contrast of the proposed Project and ancillary facilities (Figure 4.5-1). The low to moderate impacts as assessed in the original AFC filing should be lowered to a low overall impact level as assessed from KOP 1. It is noted however, that the proposed Project would incrementally contribute to visual impacts in the area by adding additional industrial elements into a disturbed landscape setting.

With the change from the 138 kV gen tie in Supplement 2, to the proposed 138 kV loop, biological resources impacts would be reduced and areas containing sensitive plants and animals would be avoided. Overall, impacts to vegetation communities including coastal sage scrub are also reduced because the overall Project footprint is smaller. The incremental contribution to cumulative impacts would be less than the Supplement 2 project. In addition, mitigation for biological resources impacts will serve to enhance the area by providing mitigation lands of higher biological value than the proposed Project site.

The Project will not cause or contribute to cumulative impacts on water resources. Good engineering practices and BMPs will be used in the project design and operation. Stormwater discharge will adhere to a SWPPP and local agency water quality standards and no significant impacts to surface water or groundwater quality are expected during construction or operation of the Project. Given minimal alteration proposed to the drainages in the area, the minimal water quality impacts associated with the project would not incrementally contribute to a cumulative significant impact. Because the proposed Project requires relatively little water, no significant adverse impacts to local water supply are expected. The Project water consumption represents less than 1 percent of the water provider's supplies, and therefore the Project will not result in potentially significant impacts to water supply.

With regard to cumulative impacts to soils, the project presented in Supplement 2 was balanced at a total of approximately 125,000 to 150,000 cubic yards. If the proposed Project cut and fill quantities (165,000 and 163,000 cubic yards respectively) cannot be balanced onsite, the excess soil, approximately 2,000 cubic yards, will be disposed offsite. The soil loss for the proposed Project (8.5 tons) is approximately 15 percent higher than for the project described in Supplement 2. The potential for this increase to incrementally contribute to cumulative impacts would be reduced through the implementation of a variety of BMPs designed to minimize the loss of soil.

The potential for the proposed Project to contribute a cumulative incremental significant impact to paleontological resources is less than that of the project as described in the AFC and Supplement 2 because the overall disturbance area and project footprint is much smaller.

This page intentionally left blank.

FIGURES

This page intentionally left blank.

Printing Date: 6/18/2012 2:28:35 PM
Path: P:\GIS\Projects\4346_QuailBrush\MXD\AFC_Supplement_3\1.1-1_Project_Layout.mxd

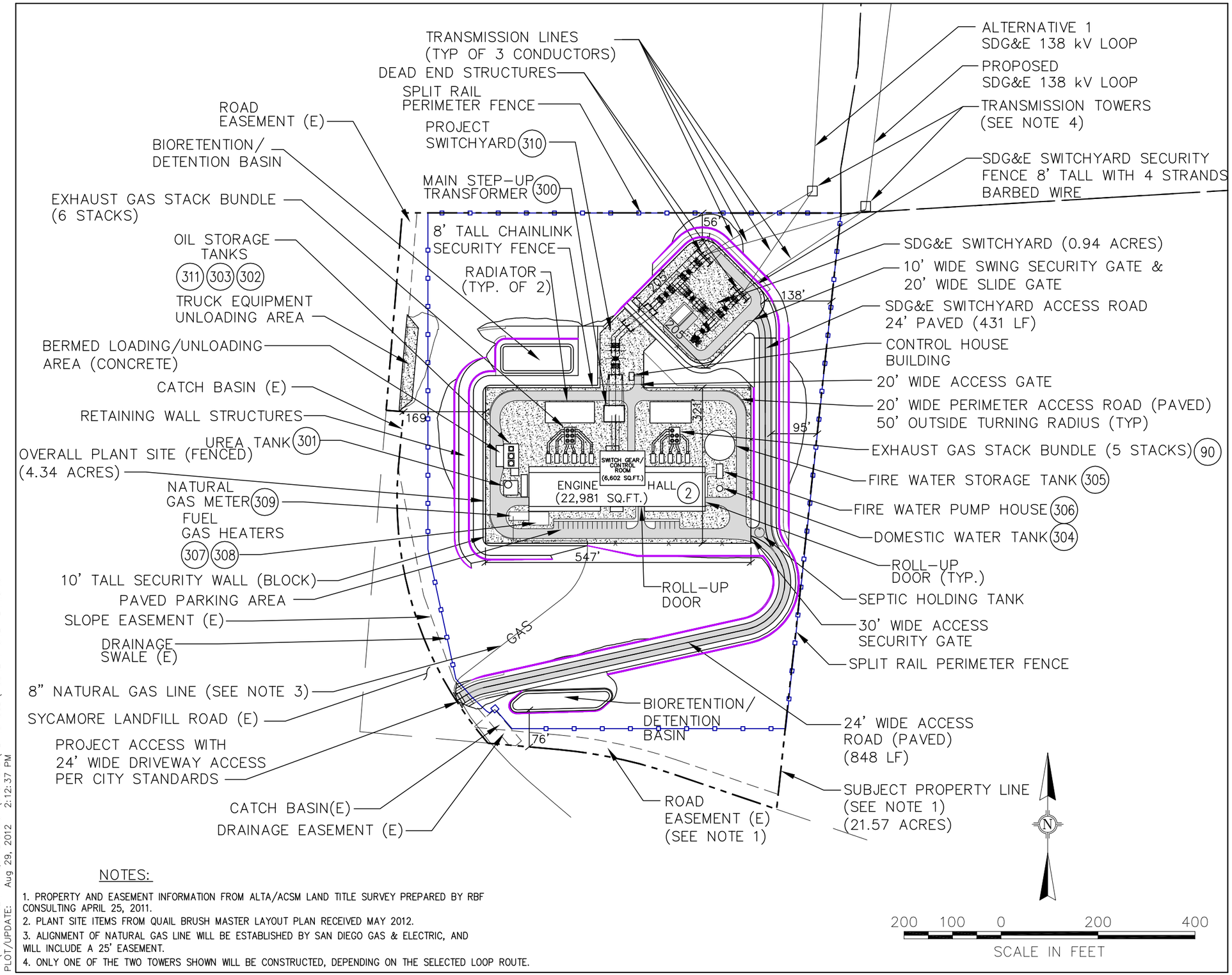

LEGEND:

GAL.	GALLON
L.F.	LINEAR FEET
SQ.FT.	SQUARE FEET
TYP.	TYPICAL
(E)	EXISTING
SDG&E	SAN DIEGO GAS AND ELECTRIC
(310)	ITEM NO.
	ASPHALT PAVEMENT
	GRAVEL
—x—	CHAINLINK FENCE
— - - —	PARCEL BOUNDARY
— GAS —	NEW NATURAL GAS LINE
	RETAINING WALLS

POWER PLANT EQUIPMENT (SEE NOTE 2)

Item No	Pcs.	DESCRIPTION	DESCRIPTION Dia.	Ht.	Cap.(G)
2	1	Engine Hall	–	24'	
71	2	Radiator Sets		18' H	
90	11	Exhaust gas Stack	4' ø	70' H	
300	1	Main Step-Up Transformer		30' H	
301	1	UreaTank	13' ø	22' H	20,000
302	1	Used Oil Tank	10' ø	20' H	10,000
303	1	New Oil Tank	10' ø	20' H	10,000
304	1	Domestic Water Tank	10' ø	20' H	10,000
305	1	Fire Water Tank	60' ø	30' H	600,000
306	1	Fire Water Pumphouse		STACK=30'H	
307	1	Warm Start Gas Heater		STACK=30'H	
308	1	Fuel Gas Heater		STACK=30'H	
309	1	Natural Gas Metering Station		6' H	
310	1	Facility 230kV Switchyard		52' H Mast	
311	1	Maintenance Oil Tank	8' ø	16' H	6,000

NOTES:

1. PROPERTY AND EASEMENT INFORMATION FROM ALTA/ACSM LAND TITLE SURVEY PREPARED BY RBF CONSULTING APRIL 25, 2011.
2. PLANT SITE ITEMS FROM QUAIL BRUSH MASTER LAYOUT PLAN RECEIVED MAY 2012.
3. ALIGNMENT OF NATURAL GAS LINE WILL BE ESTABLISHED BY SAN DIEGO GAS & ELECTRIC, AND WILL INCLUDE A 25' EASEMENT.
4. ONLY ONE OF THE TWO TOWERS SHOWN WILL BE CONSTRUCTED, DEPENDING ON THE SELECTED LOOP ROUTE.

QUAIL BRUSH GENERATION PROJECT

FIGURE 1.1-2
SITE PLAN

TETRA TECH EC, INC.
Cogentrix

P:\4346-COGENTRIX QUAIL BRUSH\CAD-S3B\PLANS-S3B\FIGURE 1-SITE PLAN.DWG
PLOT/UPDATE: Aug 29, 2012 2:12:37 PM

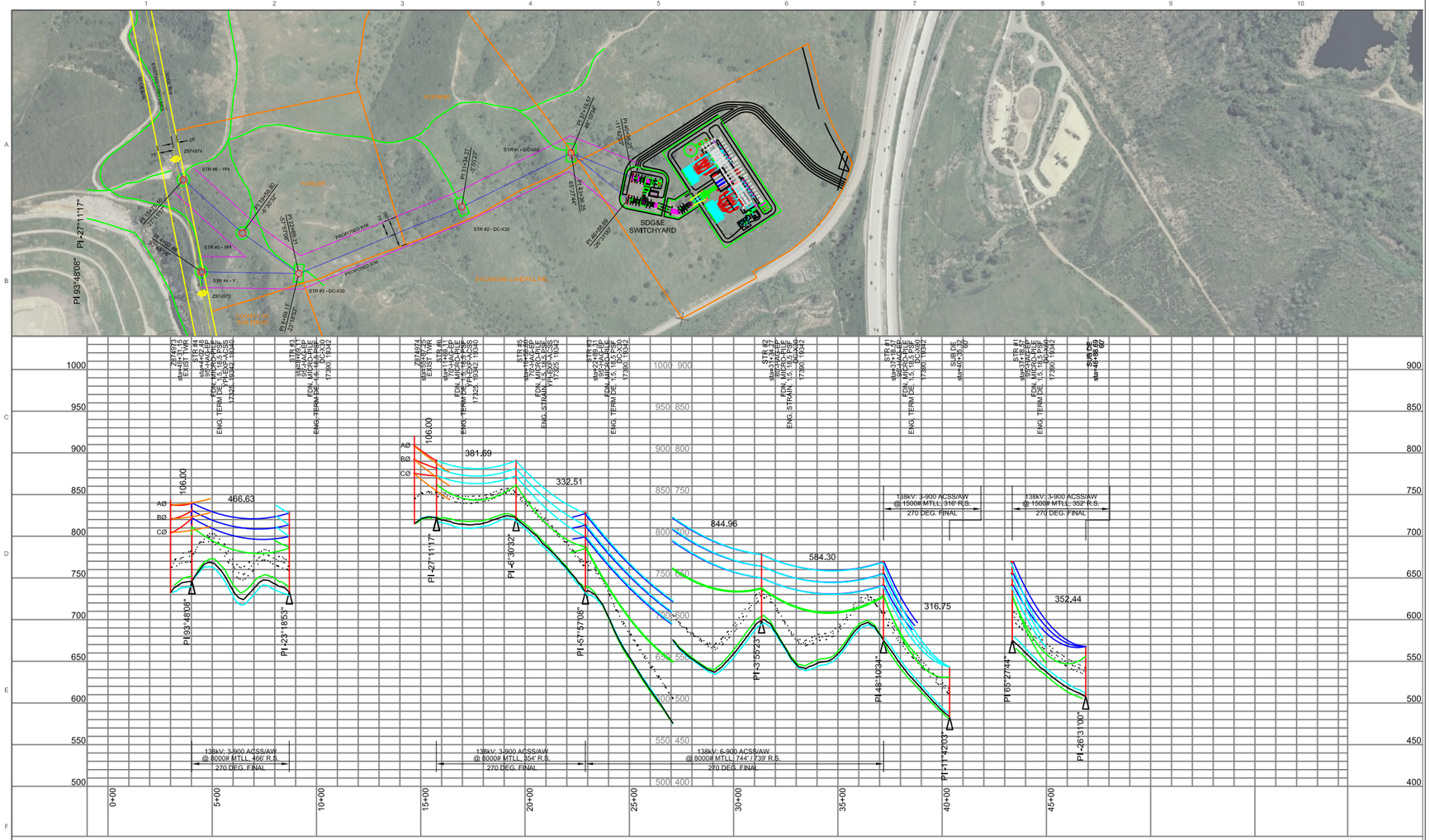

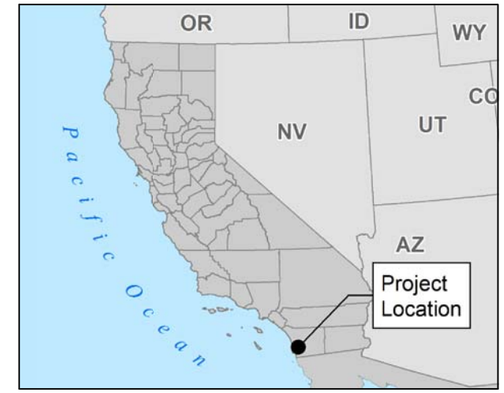

QUAIL BRUSH GENERATION PROJECT

FIGURE 1.1-3
PROPOSED SDG&E 138 kV
LOOP PLAN AND PROFILE DRAWING

TETRA TECH EC, INC.
Cogentrix

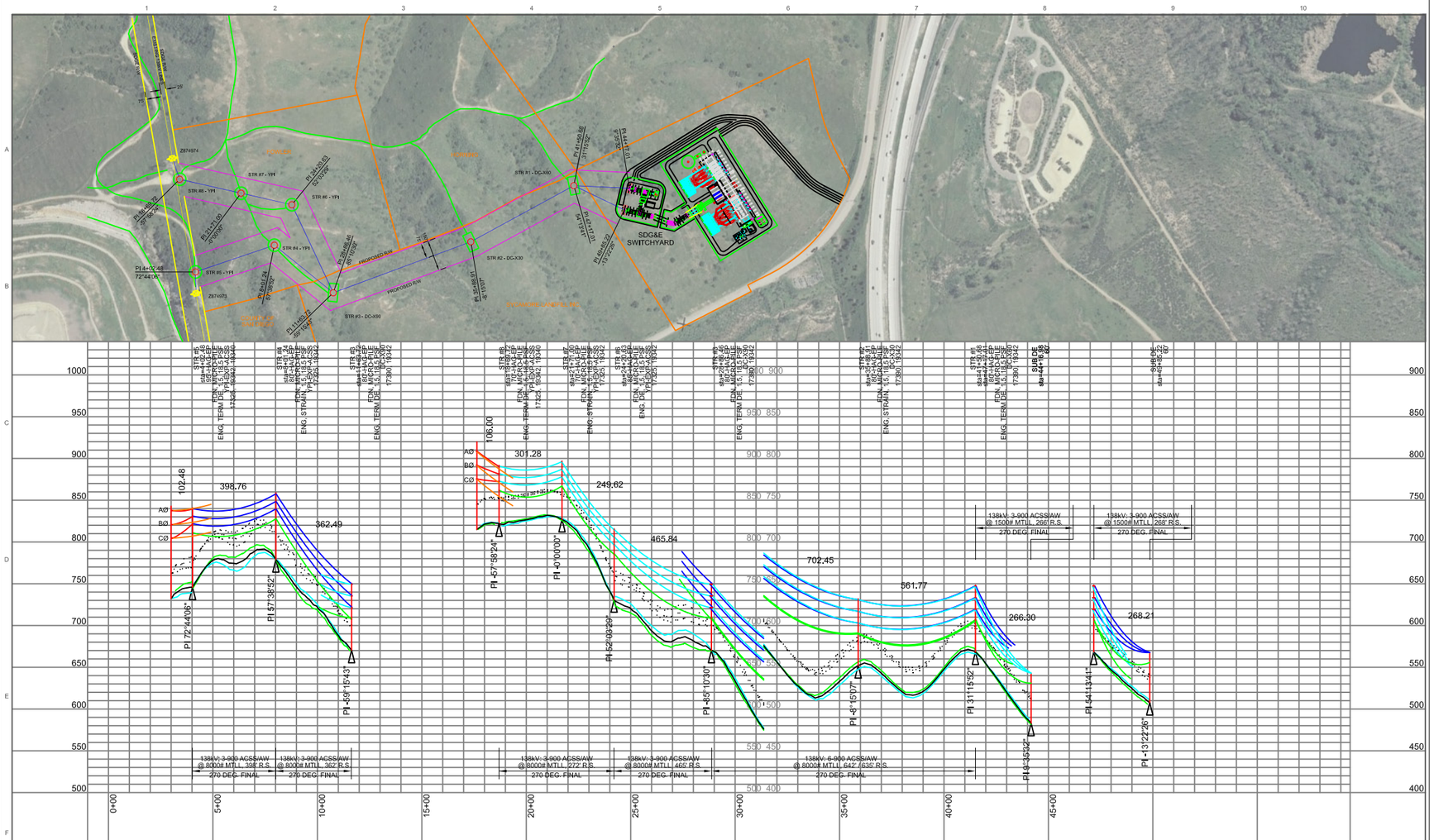

PRELIMINARY

NOTES:

200.0 ft. Horiz. Scale

50.0 ft. Vert. Scale

NORTH

REV. #1 | DATE | DESCRIPTION | BY | CKD. | APVD.

REVISIONS

PROPRIETARY NOTICE

DRN:
DSN:
CKD:
ENG'D:
STAMPED BY:
REGISTRATION NO:
STATE:
C.O.A.:
STATE:

AMPIRICAL SOLUTIONS LLC
661 RIVER HIGHLANDS BLVD, COVINGTON, LA 70433
PHONE: (985) 809-5240, FAX: (985) 809-5250

COGENTRIX QUAIL BRUSH
138kV LINE BREAK (TL 13822)
ALTERNATIVE 1

SCALE: | DRAWING NO: QB138-ALT 2 | SHEET: 1 of 1

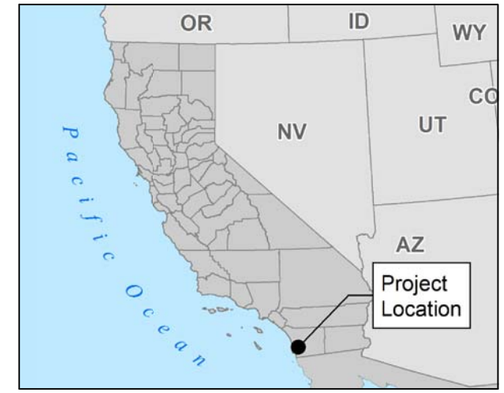

QUAIL BRUSH GENERATION PROJECT

FIGURE 1.1-4
ALTERNATIVE 1 SDG&E 138 kV
LOOP PLAN AND PROFILE DRAWING

TETRA TECH EC, INC.

Cogentrix

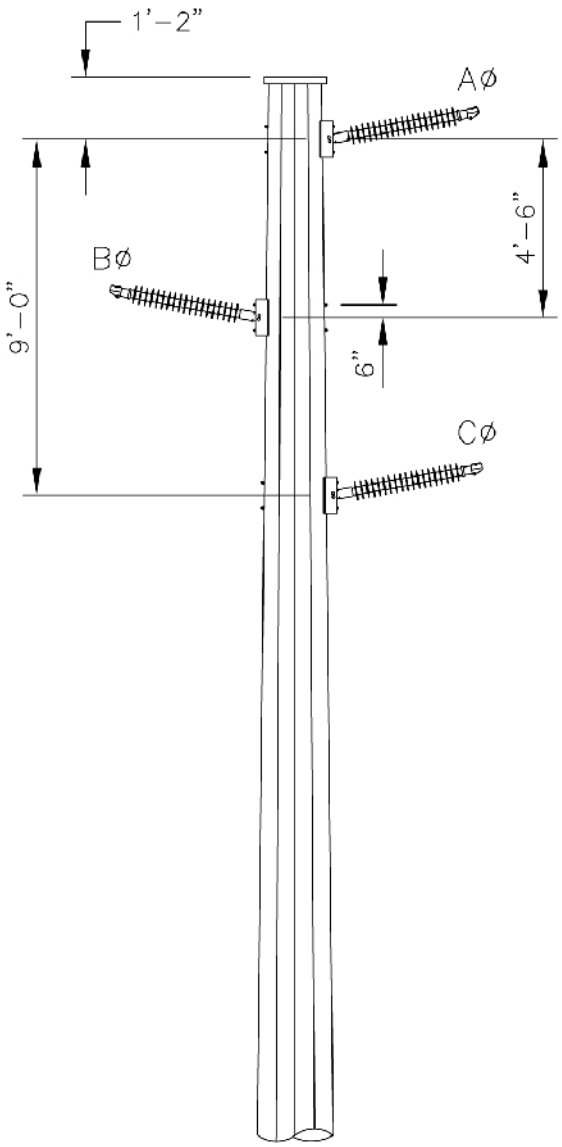

138kV "WPI" TYPE

QUAIL BRUSH GENERATION PROJECT

FIGURE 2.3-1
138 kV OVERHEAD TRANSMISSION LOOP "WPI" POLE TOP ARRANGEMENT

Cogentrix

TETRA TECH EC, INC.

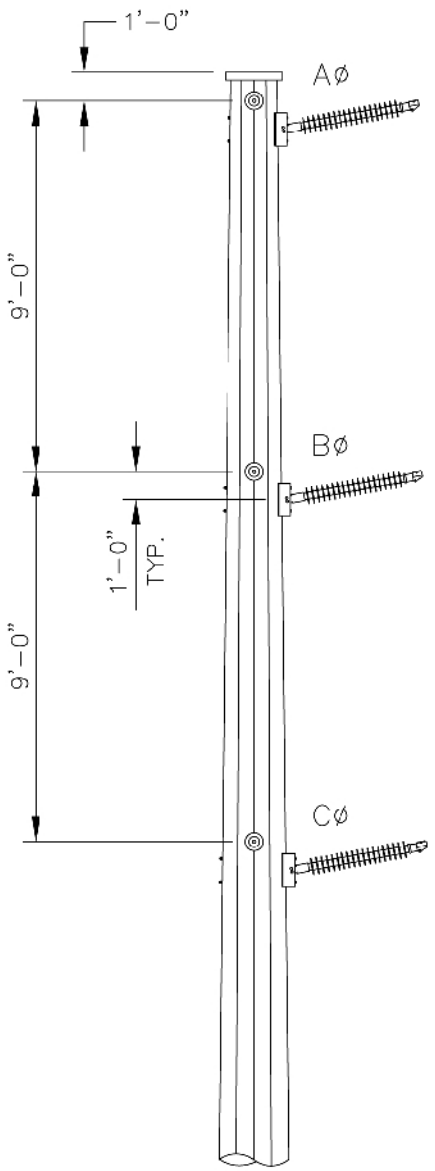

138kV "YPI" TYPE

QUAIL BRUSH GENERATION PROJECT

FIGURE 2.3-2
138 kV OVERHEAD TRANSMISSION LOOP "YPI" POLE TOP ARRANGEMENT

Cogentrix

TETRA TECH EC, INC.

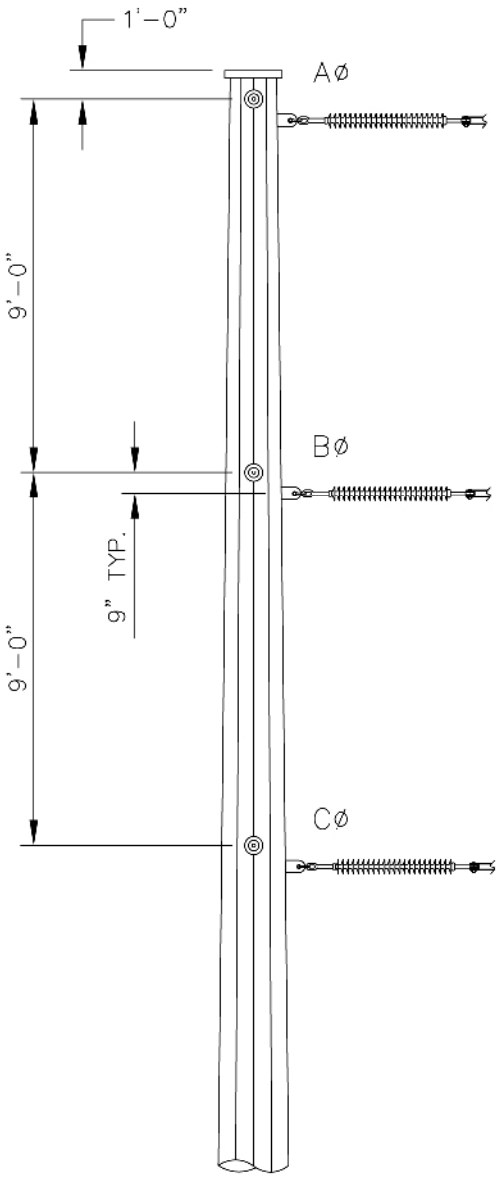

138kV "Y" TYPE

QUAIL BRUSH GENERATION PROJECT

FIGURE 2.3-3
138 kV OVERHEAD TRANSMISSION LOOP
"Y"
POLE TOP ARRANGEMENT

Cogentrix

TETRA TECH EC, INC.

Printing Date: 8/21/2012 2:41:45 PM
Path: P:\GIS\Projects\4346_QuailBrush\MXD\Noise_082012\4.3-2_Received_Sound_QB_Plant.mxd

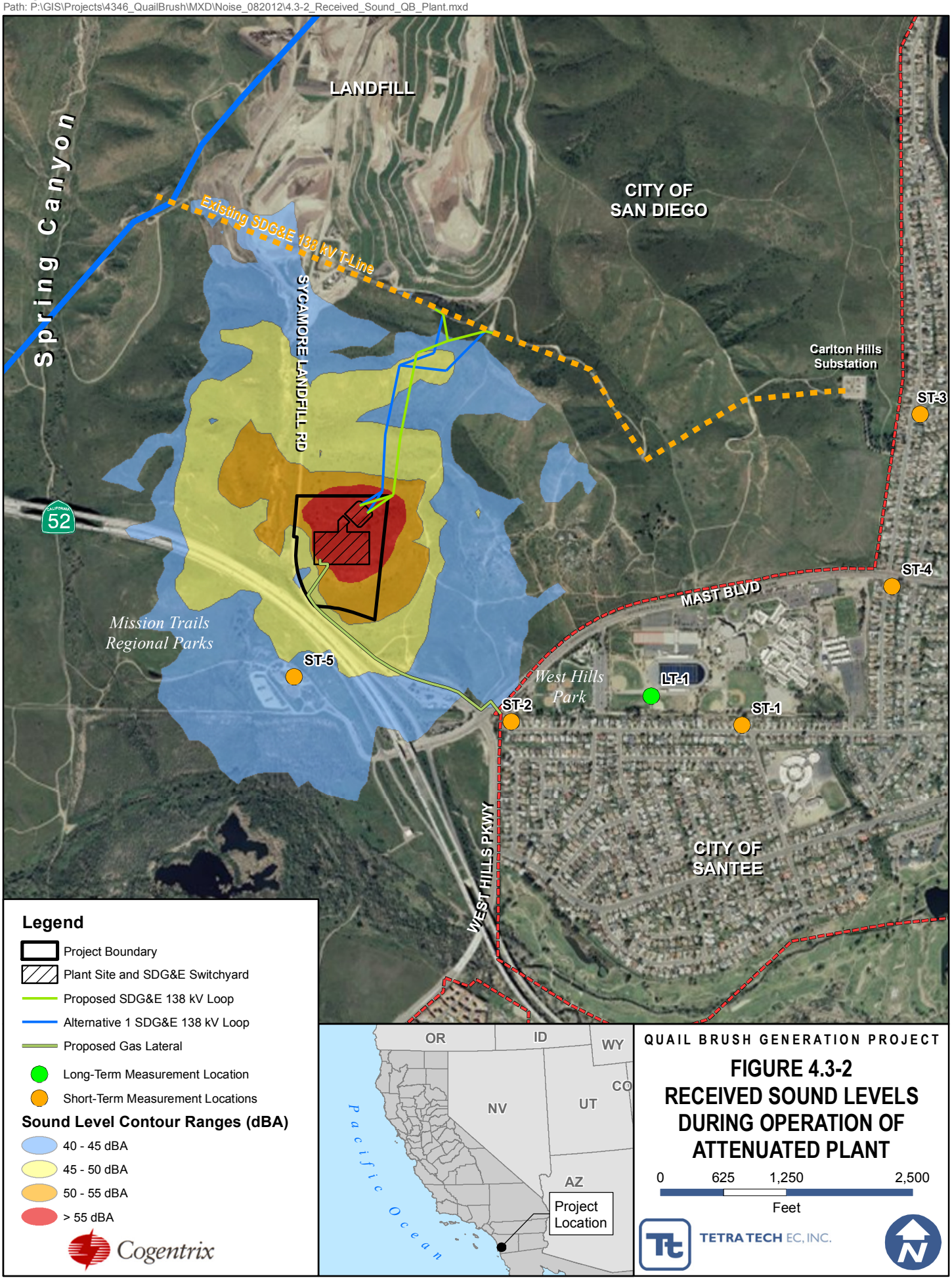

Printing Date: 8/21/2012 2:41:02 PM
Path: P:\GIS\Projects\4346_QuailBrush\MXD\Noise_082012\4.3-3_Received_Sound_HDD_Construction.mxd

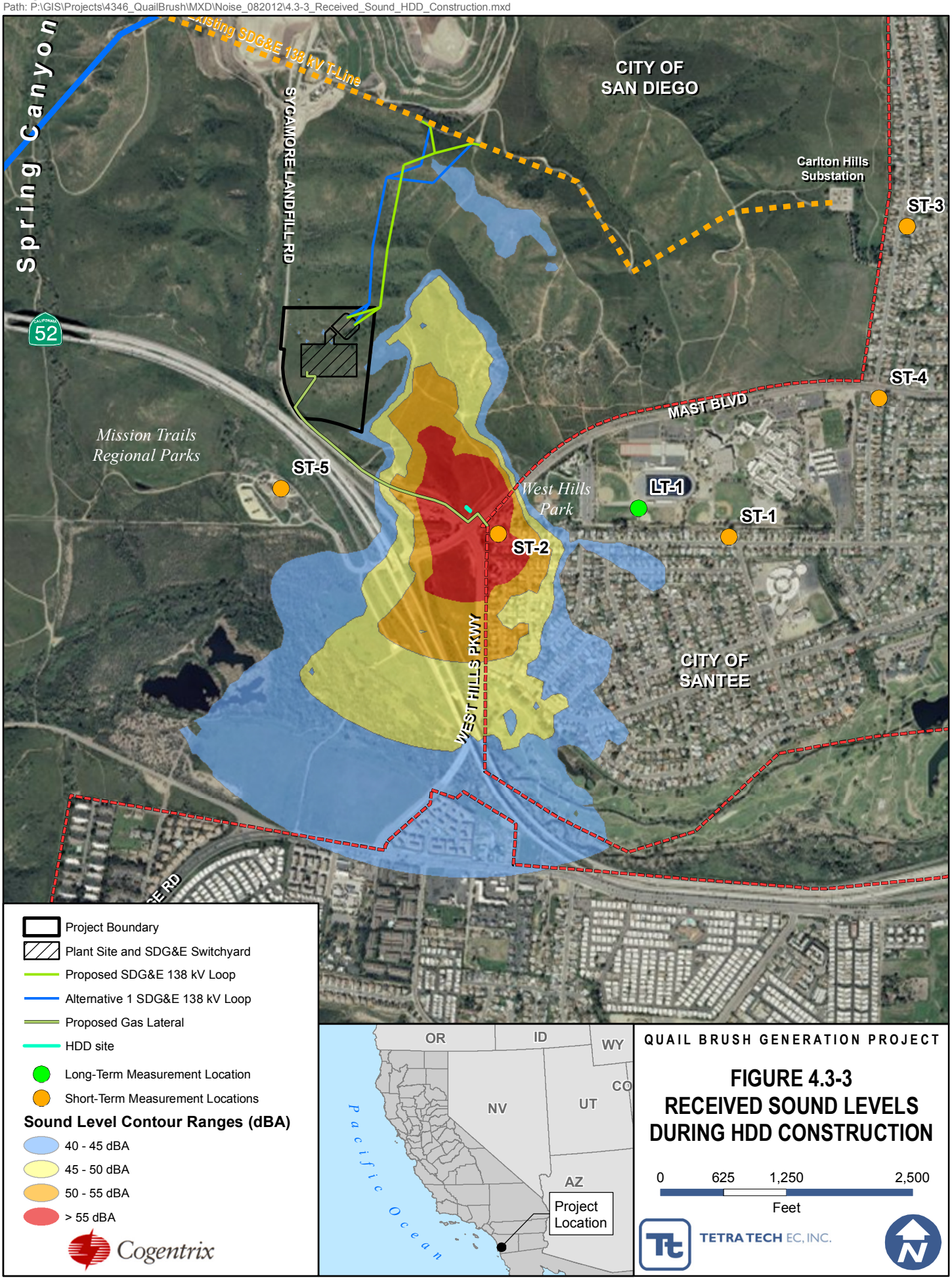

QUAIL BRUSH GENERATION PROJECT

FIGURE 4.5-1
VISUAL SIMULATION OF THE PROJECT

Cogentrix

TETRA TECH EC, INC.

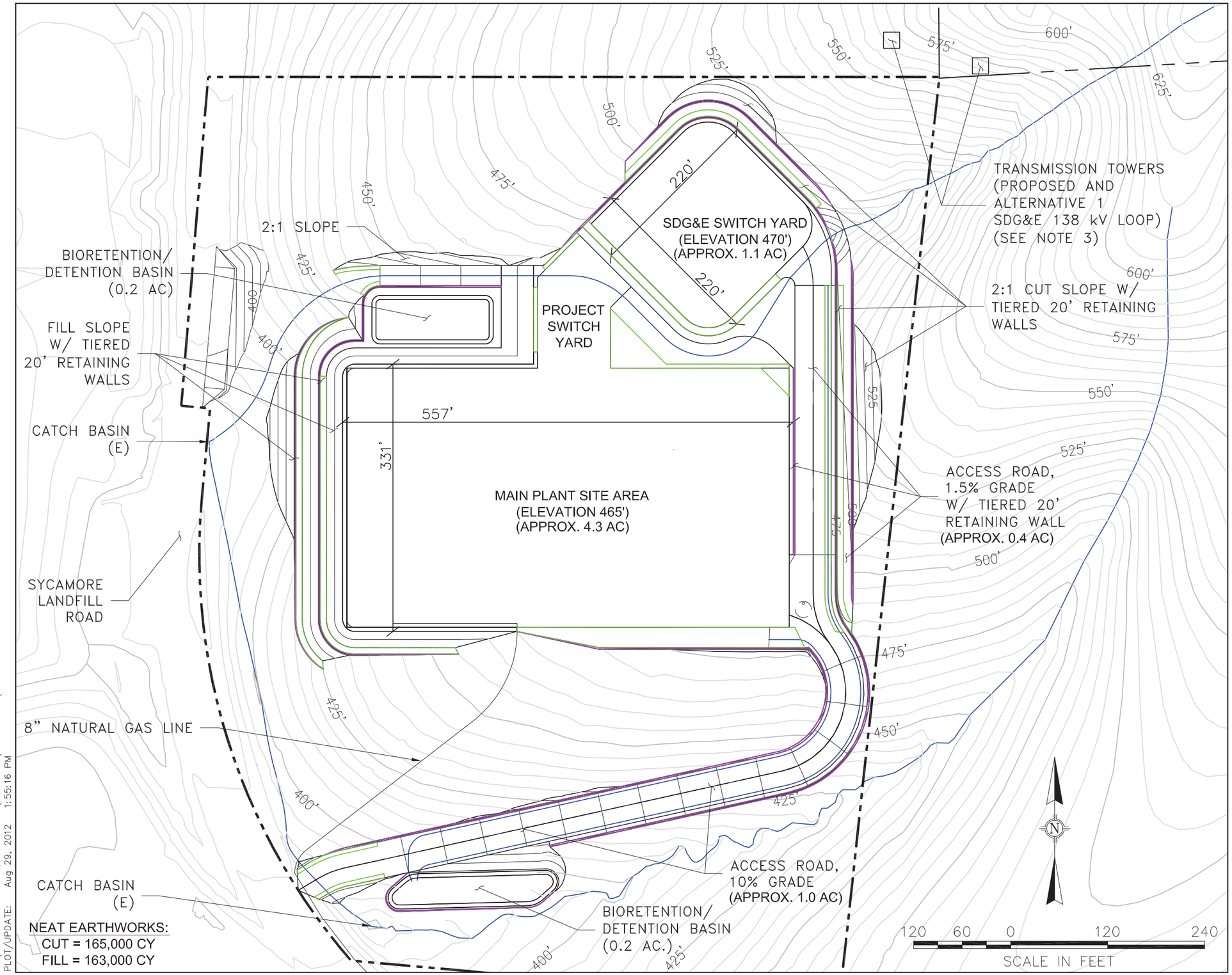

LEGEND:

AC	ACRES
CY	CUBIC YARD
E	EXISTING
SDG&E	SAN DIEGO GAS & ELECTRIC
	PROPOSED WALL
	PROPOSED BIO SWALE
	ESTIMATED DRAINAGE WATERCOURSE
500'	EXISTING 25' CONTOUR
	EXISTING 5' CONTOUR
	PROPOSED CONTOUR

NOTES:

1. TOPOGRAPHY FROM INTERMAP TECHNOLOGIES VERSION 1.5 DIGITAL TERRAIN MODEL DATA.
2. PROPERTY INFORMATION FROM ALTA/ACSM LAND TITLE SURVEY PREPARED BY RBF CONSULTING APRIL 25, 2011.
3. ONLY ONE OF THE TWO TOWERS SHOWN WILL BE CONSTRUCTED, DEPENDING ON THE SELECTED LOOP ROUTE

QUAIL BRUSH GENERATION PROJECT

FIGURE 4.14-1
POST DEVELOPMENT PRELIMINARY GRADING PLAN AND SITE ARRANGEMENT

TETRA TECH EC, INC.

Cogentrix

P:\4346-COGENTRIX QUAIL BRUSH\CAD-S3B\PLANS-S3B\FIGURE 2-GRADING.DWG
PLOT/UPDATE: Aug 29, 2012 1:55:16 PM