TETRA TECH EC, INC.

California Energy Commission
DOCKETED
11-AFC-3
TN # 67288
SEP 24 2012

September 24, 2012

Mr. Eric Solorio
California Energy Commission
Docket No. 11-AFC-3
1516 9th St.
Sacramento, CA 95814

Cogentrix Quail Brush Generation Project - Docket Number 11-AFC-3, Drainage Study for the Quail Brush Generation Project San Diego, California for the Quail Brush Power Project

Docket Clerk:

Pursuant to the provisions of Title 20, California Code of Regulation, and on behalf of Quail Brush Genco, LLC, a wholly owned subsidiary of Cogentrix Energy, LLC, Tetra Tech hereby submits the *Drainage Study for the Quail Brush Generation Project San Diego, California* for the Quail Brush Power Project (11-AFC-3). The Quail Brush Generation Project is a 100 megawatt natural gas fired electric generation peaking facility to be located in the City of San Diego, California.

If you have any questions regarding this submittal, please contact Rick Neff at (704) 525-3800 or me at (303) 980-3653.

Sincerely,

Constance E. Farmer
Project Manager/Tetra Tech

cc: Lori Ziebart, Cogentrix
John Collins, Cogentrix
Rick Neff, Cogentrix
Proof of Service List

BEFORE THE ENERGY RESOURCES CONSERVATION AND DEVELOPMENT COMMISSION OF THE STATE OF CALIFORNIA
1516 NINTH STREET, SACRAMENTO, CA 95814
1-800-822-6228 – WWW.ENERGY.CA.GOV

APPLICATION FOR CERTIFICATION
FOR THE *QUAIL BRUSH GENERATION PROJECT*

DOCKET NO. 11-AFC-03
PROOF OF SERVICE
(Revised 8/14/2012)

APPLICANT
Cogentrix Energy, LLC
C. Richard "Rick" Neff, Vice President
Environmental, Health & Safety
9405 Arrowpoint Boulevard
Charlotte, NC 28273
rickneff@cogentrix.com

Cogentrix Energy, LLC
John Collins, VP Development
Lori Ziebart, Project Manager
Quail Brush Generation Project
9405 Arrowpoint Blvd.
Charlotte, NC 28273
johncollins@cogentrix.com
loriziebart@cogentrix.com

APPLICANT'S CONSULTANTS
Tetra Tech EC, Inc.
Connie Farmer
Sr. Environmental Project Manager
143 Union Boulevard, Suite 1010
Lakewood, CO 80228
connie.farmer@tetratech.com

Tetra Tech EC, Inc.
Barry McDonald
VP Solar Energy Development
17885 Von Karmen Avenue, Ste. 500
Irvine, CA 92614-6213
barry.mcdonald@tetratech.com

*Tetra Tech EC, Inc.
Sarah McCall
Sr. Environmental Planner
143 Union Boulevard, Suite 1010
Lakewood, CO 80228
sarah.mccall@tetratech.com

COUNSEL FOR APPLICANT
Bingham McCutchen LLP
Ella Foley Gannon
Camarin Madigan
Three Embarcadero Center
San Francisco, CA 94111-4067
ella.gannon@bingham.com
camarin.madigan@bingham.com

INTERVENORS
Roslind Varghese
9360 Leticia Drive
Santee, CA 92071
roslindv@gmail.com

Rudy Reyes
8527 Graves Avenue, #120
Santee, CA 92071
rreyes2777@hotmail.com

Dorian S. Houser
7951 Shantung Drive
Santee, CA 92071
e-mail service preferred
dhouser@cox.net

Kevin Brewster
8502 Mesa Heights Road
Santee, CA 92071
lzpup@yahoo.com

Phillip M. Connor
Sunset Greens Home Owners Association
8752 Wahl Street
Santee, CA 92071
connorphil48@yahoo.com

HomeFed Fanita Rancho, LLC
Jeffrey A. Chine
Heather S. Riley
Allen Matkins Leck Gamble Mallory & Natsis LLP
501 West Broadway, 15th Floor
San Diego, CA 92101
jchine@allenmatkins.com
hriley@allenmatkins.com
jkaup@allenmatkins.com

Preserve Wild Santee
Van Collinsworth
9222 Lake Canyon Road
Santee, CA 92071
savefanita@cox.net

Center for Biological Diversity
John Buse
Aruna Prabhala
351 California Street, Suite 600
San Francisco, CA 94104
jbuse@biologicaldiversity.org
aprabhala@biologicaldiversity.org

INTERESTED AGENCIES
California ISO
e-recipient@caiso.com

City of Santee
Department of Development Services
Melanie Kush
Director of Planning
10601 Magnolia Avenue, Bldg. 4
Santee, CA 92071
mkush@ci.santee.ca.us

Morris E. Dye
Development Services Dept.
City of San Diego
1222 First Avenue, MS 501
San Diego, CA 92101
mdye@sandiego.gov

*indicates change

INTERESTED AGENCIES (cont.)

Mindy Fogg
Land Use Environmental Planner
Advance Planning
County of San Diego
Department of Planning & Land Use
5201 Ruffin Road, Suite B
San Diego, CA 92123
mindy.fogg@sdcounty.ca.gov

ENERGY COMMISSION – DECISIONMAKERS

KAREN DOUGLAS
Commissioner and
Presiding Member
karen.douglas@energy.ca.gov

ANDREW McALLISTER
Commissioner and
Associate Member
andrew.mcallister@energy.ca.gov

Raoul Renaud
Hearing Adviser
raoul.renaud@energy.ca.gov

Galen Lemei
Advisor to Commissioner Douglas
galen.lemei@energy.ca.gov

*Jennifer Nelson
Advisor to Commissioner Douglas
jennifer.nelson@energy.ca.gov

David Hungerford
Advisor to Commissioner McAllister
david.hungerford@energy.ca.gov

ENERGY COMMISSION STAFF

Eric Solorio
Project Manager
eric.solorio@energy.ca.gov

Stephen Adams
Staff Counsel
stephen.adams@energy.ca.gov

Eileen Allen
Commissioners' Technical
Adviser for Facility Siting
eileen.allen@energy.ca.gov

ENERGY COMMISSION – PUBLIC ADVISER

Jennifer Jennings
Public Adviser's Office
publicadviser@energy.ca.gov

DECLARATION OF SERVICE

I, Constance Farmer, declare that on September 24, 2012, I served and filed a copy of the *Drainage Study for the Quail Brush Generation Project San Diego, California* (11-AFC-03). This document is accompanied by the most recent Proof of Service list, located on the web page for this project at: [http://www.energy.ca.gov/sitingcases/quailbrush/index.html].

The document has been sent to the other parties in this proceeding (as shown on the Proof of Service list) and to the Commission's Docket Unit or Chief Counsel, as appropriate, in the following manner:

(Check all that Apply)
For service to all other parties:

☒ Served electronically to all e-mail addresses on the Proof of Service list;

☒ Served by delivering on this date, either personally, or for mailing with the U.S. Postal Service with first- class postage thereon fully prepaid, to the name and address of the person served, for mailing that same day in the ordinary course of business; that the envelope was sealed and placed for collection and mailing on that date to those addresses **NOT** marked "e-mail preferred."

AND

For filing with the Docket Unit at the Energy Commission:

☒ by sending an electronic copy to the e-mail address below (preferred method); ***OR***

☐ by depositing an original and 12 paper copies in the mail with the U.S. Postal Service with first class postage thereon fully prepaid, as follows:

CALIFORNIA ENERGY COMMISSION – DOCKET UNIT
Attn: Docket No. 11-AFC-3
1516 Ninth Street, MS-4
Sacramento, CA 95814-5512 docket@energy.state.ca.us

OR, if filing a Petition for Reconsideration of Decision or Order pursuant to Title 20, § 1720:

☐ Served by delivering on this date one electronic copy by e-mail, and an original paper copy to the Chief Counsel at the following address, either personally, or for mailing with the U.S. Postal Service with first class postage thereon fully prepaid:

California Energy Commission
Michael J. Levy, Chief Counsel
1516 Ninth Street MS-14
Sacramento, CA 95814
mlevy@energy.state.ca.us

I declare under penalty of perjury under the laws of the State of California that the foregoing is true and correct, that I am employed in the county where this mailing occurred, and that I am over the age of 18 years and not a party to the proceeding.

Constance C. Farmer

CALIFORNIA ENERGY COMMISSION
1516 NINTH STREET
SACRAMENTO, CA 95814-5512
www.energy.ca.gov

TO: *All Parties* *Date: August 14*, 2012

RE: ***QUAIL BRUSH GENERATION PROJECT***
Proof of Service List
Docket No. 11-AFC-03

Attached is the ***newly revised*** Proof of Service List for the above-mentioned project, current as of August 14, 2012.

Note that the presumptions about e-mail only service of documents on the parties have changed. Formerly, you had to affirmatively indicate your willingness to accept e-mail only service. Now all parties are presumed to accept e-mail only service unless they specifically inform us that they wish to receive paper copies.

Pursuant to the "General Orders Regarding Electronic Document Formats, Filing and Service of Documents and Other Matters" adopted in this proceeding, until a party indicates to the Presiding Member or Hearing Adviser that it requires a hard copy, an e-mailed copy of all electronic documents of 5 megabytes maximum file size is sufficient for service in this proceeding. No hard copy of an e-mailed document need be provided. Where a party is designated on the Proof of Service List for this proceeding as "hard copy required" or similar words, parties shall deliver a paper copy of all written material they file in this proceeding in person or by first class mail, or other equivalent delivery service, with postage prepaid to the person so designated. Regardless whether a party has indicated a preference for hard copies, documents larger than 50 pages may alternatively be sent in the form of an electronic file recorded on a compact disk rather than as a paper copy, provided that the party is offered the opportunity to request a paper copy.

Unless otherwise specified in a regulation, all materials filed with the Commission must also be filed with the Docket Unit. (Cal. Code Regs., tit. 20, § 1209(d).) Some regulations require filing with the Commission's Chief Counsel instead of the Docket Unit. For example, Section 1720 requires a petition for reconsideration to be filed with the Chief Counsel and served on the parties. Service on the attorney representing Commission staff does not satisfy this requirement. This Proof of Service form is not appropriate for use when filing a document with the Chief Counsel under Title 20, sections 1231 (Complaint and Request for Investigation) or 2506 (Petition for

Inspection or Copying of Confidential Records). The Public Advisor can answer any questions related to filing under these sections.

New addition(s) to the Proof of Service are indicated in **bold font** and marked with an asterisk (*).

Use this newly revised list for all future filings and submittals. This Proof of Service List will also be available on the Commission's project web site at:

http://www.energy.ca.gov/sitingcases/quailbrush/index.html

Please review the information and contact me at maggie.read@energy.ca.gov or (916) 654-3893, if you would like to be removed from the Proof of Service or if there are any changes to your contact information.

Maggie Read
Hearing Adviser's Office

Drainage Study
for the
Quail Brush Generation Project
San Diego, California

September 2012

Prepared for

Quail Brush Genco, LLC

Prepared By

Tetra Tech EC, Inc.
17885 Von Karman Avenue, Suite 500
Irvine, California 92614

William Sedlak
Engineering Manager

Gregory Hemmen, PE
Project Engineer

TABLE OF CONTENTS

PAGE

ABBREVIATIONS AND ACRONYMS iii

1.0 INTRODUCTION 1-1
- 1.1 PROJECT DESCRIPTION 1-1
  - 1.1.1 Power Plant Site Arrangement and Layout 1-1
  - 1.1.2 SDG&E Utility Switchyard Arrangement 1-3

2.0 EXISTING WATERSHED DRAINAGE CHARACTERISTICS 2-1
- 2.1 NORTH WATERSHED DRAINAGE 2-1
- 2.2 CENTRAL WATERSHED DRAINAGE 2-2
- 2.3 SOUTH WATERSHED DRAINAGE 2-2

3.0 METHODOLOGY AND DESIGN CRITERIA 3-1
- 3.1 WATER QUALITY OVERVIEW 3-1
- 3.2 HYDROLOGIC METHODOLOGY OVERVIEW 3-1
  - 3.2.1 Rational Method 3-1
  - 3.2.2 Precipitation Data 3-2
- 3.3 HYDRAULIC METHODOLOGY OVERVIEW 3-2

4.0 EXISTING HYDROLOGY 4-1

5.0 PROPOSED PROJECT DRAINAGE 5-1
- 5.1 WATER QUALITY 5-1
- 5.2 HYDROMODIFICATION MANAGEMENT PLAN 5-1
- 5.3 POST DEVELOPMENT HYDROLOGY 5-2
  - 5.3.1 Watershed Drainage Patterns 5-2
  - 5.3.2 Project Drainage Patterns 5-2
  - 5.3.3 Project Watershed Drainage Patterns 5-3

6.0 PROPOSED HYDRAULICS 6-1
- 6.1 DESIGN STRATEGIES 6-1
- 6.2 PROJECT CHANNELS AND CULVERTS 6-3
- 6.3 PLANT AREA STORMWATER DRAINAGE 6-6

7.0 CONCLUSION 7-1

8.0 REFERENCES 8-1

TABLE OF CONTENTS
(Continued)

TABLES

Table 3-1. Design Storm Event Data 3-2
Table 4-1. Existing Hydrology – Peak Runoff Flow Rates 4-1
Table 4-2. Existing Hydrology – Peak Runoff Volumes 4-1
Table 5-1. Post Development Hydrology – Peak Runoff Flow Rates.....5-3
Table 5-2. Post Development Hydrology – Peak Runoff Volumes 5-4
Table 5-3. Comparison of Existing and Post Development Hydrology 5-4
Table 6-1. Post Development Central Watershed Channels 6-4
Table 6-2. Post Development South Watershed and Perimeter Channels.....6-5
Table 6-3. Project Perimeter Channels.....6-5
Table 6-4. Post Development Culvert Summary.....6-6
Table 6-5. Post Development Storm Drains Summary 6-6

FIGURES

Figure 1-1 Project Vicinity Map
Figure 1-2 Site Plot Plan
Figure 2-1 Existing Hydrology
Figure 5-1 Proposed Post Development Hydrology
Figure 5-2 Conceptual BMP/LID Locations
Figure 6-1 Post Development Structures and Hydraulic Controls

APPENDICES

Appendix A Support Documents for Hydrologic Calculations
Appendix B Support Documents for Hydraulic Calculations
Appendix C San Diego Regional Standard Drawings

ABBREVIATIONS AND ACRONYMS

A	drainage area in acres or cross sectional area in square feet
ac-ft	acre-feet
AFC	Application for Certification
ALTA	American Land Title Association
ACSM	American Congress on Surveying and Mapping
amsl	above mean sea level
APN	Assessor's Parcel Number
Applicant or Owner	Quail Brush Genco, LLC
BMP	Best Management Practice
C	runoff coefficient
CEC	California Energy Commission
cfs	cubic feet per second
DTM	digital terrain model
fps	feet per second
gen-tie	generation tie line
HDPE	high density polyethylene
H:V	horizontal to vertical ratio
HMP	Hydromodification Management Plan
in/hr	inches per hour
I	rainfall intensity in inches per hour
kV	kilovolt
LID	low impact development
MMBtu/hr	million British thermal units per hour
MW	megawatt
n	Manning's roughness coefficient
NOAA	National Oceanic and Atmospheric Administration
NRCS	Natural Resources Conservation Service
PDP	Priority Development Project
Project	Quail Brush Generation Project
Q or Qp	peak discharge flow in cubic feet per second
R	hydraulic radius of flow
RM	Rational method
S	longitudinal slope of channel flow path

ABBREVIATIONS AND ACRONYMS
(Continued)

SDG&E	San Diego Gas and Electric
SDRWQCB	California Regional Water Quality Control Board San Diego Region 9
SR	State Route
Tc	time of concentration
Ti	initial time of concentration
Tt	travel time
Tetra Tech	Tetra Tech EC, Inc.
Vp	peak volume

1.0 INTRODUCTION

This Drainage Study (Study) has been developed for Quail Brush Genco, LLC by Tetra Tech EC, Inc. (Tetra Tech) as a planning document toward final design in order to identify and summarize the existing and proposed drainage and hydrologic conditions for the proposed Quail Brush Generation Project (Project).

1.1 PROJECT DESCRIPTION

On August 25, 2011, Quail Brush Genco, LLC (Applicant or Owner) docketed with the California Energy Commission (CEC) an Application for Certification (AFC) 11-AFC-03 for its proposed Project. A Supplement to the AFC was docketed with the CEC on October 24, 2011 providing additional information, and the CEC determined that the AFC was data adequate on November 16, 2011. Following data adequacy, the Project has been modified to reduce environmental impacts. Supplement 2 to the AFC was docketed with the CEC on February 8, 2012, and presented information regarding proposed changes to the Project, including the change to a 138 kilovolt (kV) generation tie line (gen-tie) from the proposed Project site to the Carlton Hills Substation (including ancillary facilities), and a revised laydown area for the Project. Supplement 3 was docketed with the CEC on August 31, 2012, and provided information regarding additional proposed changes to the plant layout and facilities, as well as changes to the proposed gen-tie and the interconnection to the electrical grid.

The proposed Project will be a nominal 100-megawatt (MW) intermediate/peaking load electrical generating facility using natural gas-fired reciprocating engine technology. The Project will be located on a 21.6 acre parcel (Assessor's Parcel Number [APN] 366-081-42) on Sycamore Landfill Road within the City of San Diego. The power generated by the Project will be delivered to the San Diego Gas and Electric (SDG&E) electrical grid at the Carlton Hills substation. In addition to the power plant, new access roads and a new SDG&E 138 kV utility switchyard will be located within the 21.6-acre site. A new 138 kV line loop will extend into the new utility switchyard from the existing 138 kV transmission line that runs east-west, approximately 0.5 mile north of the switchyard.

1.1.1 Power Plant Site Arrangement and Layout

The Project site is located on Sycamore Landfill Road, approximately 0.5 mile northwest of Mast Boulevard (Figure 1-1). The major features associated with the installation of the proposed Project include the following:

- Eleven nominal 9.3 MW (gross) Wartsila model 20V34SG natural gas-fired reciprocating engines
- Eleven separate state-of-the-art air pollution control systems (one system per reciprocating engine)
- Eleven stacks, approximately 48-inch diameter x 70-foot tall
- An acoustically engineered building (engine hall) enclosing all 11 reciprocating engines
- Closed loop cooling systems (fan-cooled radiator assemblies)
- A 4 million British thermal units per hour (MMBtu/hr) natural gas-fired heater, used for heating of the natural gas fuel to the reciprocating engines

- A 4 MMBtu/hr natural gas-fired heater, used for heating of the engine cooling water system for 10-minute start capability
- An engine standby heater
- A diesel-fueled fire pump engine, rated at approximately 144 brake horsepower unit
- Storage Tanks:
  - A new lube oil tank, approximately 10,000 gallons
  - A used lube oil tank, approximately 10,000 gallons
  - A maintenance service oil tank, approximately 6,000 gallons
  - A diesel storage tank, approximately 250 gallons
  - An urea storage tank, approximately 20,000 gallons
  - Two maintenance water tanks, approximately 5,000 gallons each
  - Two bunkered wastewater holding tanks, approximately 3,000 gallons each
  - A fire water tank, approximately 600,000 gallons, and associated fire water system
  - A domestic water storage tank, approximately 10,000 gallons
- An on-site septic tank
- An access road between the power plant and Sycamore Landfill Road, approximately 850 feett long
- The main voltage step-up transformer, associated switchgear, and disconnects
- An on-site 138 kV Project switchyard including switchgear, circuit breakers, and disconnects
- An 8-inch diameter natural gas pipeline lateral, approximately 2,200 feet long between the Project site and the existing SDG&E 20-inch diameter high pressure natural gas pipeline located across Mast Avenue from the landfill entrance and associated on-site metering station

Equipment and storage tanks that could potentially release pollutants to the ground will either be located within a building (i.e., Wartsila engines) or within secondary containment structures (i.e., aboveground oil and chemical storage tanks, transformers, radiators, and unloading area). These containment structures will be designed to hold the entire tank/equipment contents plus have sufficient freeboard to contain stormwater precipitation.

The power plant will occupy approximately 4.3 acres, and will be enclosed by a combination of chain-link and concrete block wall security fencing. The facility entrance will be on the southeast corner of the power plant through a secured entrance gate on the access road leading from Sycamore Landfill Road to the facility. The arrangement of the power plant and associated equipment is shown on Figure 1-2.

The power plant will have a 20-foot wide, asphalt-paved perimeter road which encircles the plant. Short stub roads will provide access to the engine hall and switch gear/control room. The remainder of the power plant will have a crushed rock surface.

1.1.2 SDG&E Utility Switchyard Arrangement

The new on-site SDG&E 138 kV utility switchyard will be located northeast of the power plant and the on-site 138kV Project switchyard (Figure 1-2). It will be aligned in a northeast direction in the corner of the 21.6-acre Project site and will encompass approximately 1.0 acre. The approximately 430-foot long access road to the SDG&E utility switchyard will extend north from the power plant access road to the switchyard.

The switchyard will include the electrical switching equipment to interconnect the output from the power plant to the electrical grid. The switchyard will utilize a radial switching scheme, with a main rigid bus with four radial circuit bays: one for the Project gen-tie, two for the 138 kV loop, and one for an auxiliary transformer associated with switchyard loads. There will be three dead-end structures provided in the switchyard, one to accept the gen-tie and two others to allow looping facilities for the 138 kV transmission line loop.

The SDG&E utility switchyard will be enclosed by an 8-foot high security fence with two access gates. The switchyard will have an internal asphalt-paved road which provides access on three sides of the switchyard. The remainder of the utility switchyard will have a crushed rock surface.

This page intentionally left blank.

2.0 EXISTING WATERSHED DRAINAGE CHARACTERISTICS

The Project is within the jurisdiction of the California Regional Water Quality Control Board San Diego Region 9 (SDRWQCB), in the San Diego Hydrologic Unit. The San Diego Hydrologic Unit is a long, triangular-shaped area of about 440 square miles. It is drained by the San Diego River, which discharges into the Pacific Ocean at the community of Ocean Beach. The San Diego Hydrologic Unit is comprised of four hydrologic areas, with the Project site located in the Lower San Diego Hydrologic Area. Within that hydrologic area, the site is located within the Santee Hydrologic Subarea (identified as 907.12) (SDRWQCB 2007a).

The proposed Project is located in the eastern portion of the City of San Diego, approximately 1 mile west of the San Diego/Santee municipal border. The plant site footprint is located on the east side of Sycamore Landfill Road, approximately 0.5 mile north of the San Diego River, east of Little Sycamore Canyon, and south of the Sycamore Landfill. The Project site lies within the San Diego River watershed with the primary drainage for Little Sycamore Canyon passing west of the Project site, along the west side of Sycamore Landfill Road. This drainage flows south under State Route (SR) 52 and enters the San Diego River as it flows toward the Pacific Ocean (Figure 1-1).

The general stormwater flow pattern in the vicinity of the Project is from the higher elevations east of the site downslope towards Sycamore Landfill Road. The existing drainage for the slopes located east of Sycamore Landfill Road is either by sheet flow across the road, or south along the east side of the road to several locations where there are two existing catch basins and culverts (Figure 1-1) under Sycamore Landfill Road that drain the stormwater from the slopes above the Project parcel.

In order to better determine the existing topography and delineate the watersheds from which stormwater may impact the plant site, watershed elevation contours were evaluated. These contours were based on a digital terrain model (DTM) generated from the American Land Title Association/American Congress on Surveying and Mapping (ALTA/ACSM) Land Title Survey data for the Project site generated by RBF Consulting, combined with the DTM of the Project vicinity generated by airborne Interferometric Synthetic Aperture Radar data and processed by Intermap Technologies, Inc. Elevations range from approximately 555 feet above mean sea level (amsl) in the northeastern portion of the site to approximately 375 feet amsl in the southwestern portion of the site.

A preliminary assessment of the local watersheds that currently generate stormwater runoff through the undeveloped Project site identified three watersheds, identified as North (15.9 acres), Central (14.9 acres), and South (17.5 acres) (see Figure 2-1). The three watersheds drain naturally toward Sycamore Landfill Road.

2.1 NORTH WATERSHED DRAINAGE

Stormwater draining from the North watershed intersects Sycamore Landfill Road approximately 200 feet north of the plant site parcel. The stormwater appears to pond along the side of the road until it either flows over the road or southward along the eastern side of the road through a normally dry swale to a point where it crosses the road.

Only a very small portion of the North watershed (approximately 0.5 acres) lies within the northwest corner of the Project parcel area. No construction is anticipated within this this area, so there should be no impact from the Project on the North watershed.

2.2 CENTRAL WATERSHED DRAINAGE

The Central watershed encompasses the majority of the Project footprint, including the power plant site and the SDG&E utility switchyard. Approximately 11.7 acres of the watershed lie within the Project parcel.

The Central watershed drainage trends from the northeast to the southwest across the watershed. A portion of the stormwater enters a V-shaped, concrete drainage ditch on the western edge of the parcel. The ditch transports any flows north toward a low point where a catch basin is located. The catch basin is located just east of the Sycamore Landfill Road in approximately the north-south midpoint of the Central watershed. From the catch basin, the stormwater flows westward through a culvert under Sycamore Landfill Road into an open area west of Sycamore Landfill Road where it merges with stormwater draining southwards along the west side of the road and continues to the south, where it flows under SR 52.

2.3 SOUTH WATERSHED DRAINAGE

The South watershed drains a slightly larger area, with headwaters starting on the ridge to the east of the proposed plant site. The watershed drains in a southerly direction and shifts to the southwest through the site towards Sycamore Landfill Road. Approximately 8.4 acres of the watershed lie within the Project parcel.

A portion of the stormwater enters a V-shaped, concrete drainage ditch on the southern edge of the parcel. The ditch transports any flows south toward a low point ponding area and catch basin that also collects stormwater draining the rest of the South watershed. A culvert under Sycamore Landfill Road and SR 52 drains the stormwater from the ponding area. The culvert discharges any flows to the wash along the southwestern side of SR 52. The stormwater eventually drains into the San Diego River within the Mission Trails Regional Park.

3.0 METHODOLOGY AND DESIGN CRITERIA

The hydrologic analysis was performed to evaluate peak surface water runoff under the existing conditions in the vicinity of the Project site as identified by the San Diego County Hydrology Manual (County Hydrology Manual) (County of San Diego 2003) and City of San Diego Drainage Design Manual (City of San Diego 1984). The two primary methods used by the County for general hydrologic analysis and to determine design discharges are the Rational method (RM) and the Natural Resources Conservation Service (NRCS) hydrologic method. The Rational method is generally intended for use on small watersheds of less than 1 square mile by the County and less than 0.5 square miles by the City, while the Synthetic Unit Hydrograph method (NRCS method) is intended for use on watersheds in excess of these limits. Hydrologic analysis of the Project was performed using the Rational method.

3.1 WATER QUALITY OVERVIEW

The post development stormwater runoff from the Project will be treated in accordance with the City of San Diego Storm Water Standards, dated January 20, 2012 (Storm Water Standards) (City of San Diego 2012). The water quality and stormwater controls are discussed in the Water Quality Technical Report for the Quail Brush Generation Project (Water Quality Technical Report) dated September 2012, prepared by Tetra Tech (Tetra Tech 2012). In order to meet the Final Hydromodification Criteria, a preliminary hydromodification management plan (HMP) is also addressed within the Water Quality Technical Report for the Project.

3.2 HYDROLOGIC METHODOLOGY OVERVIEW

3.2.1 Rational Method

The Rational method is a mathematical formula used to determine the maximum runoff rate from a given rainfall event and can be applied using any chosen design storm frequency (i.e., 10-year, 25-year, etc.). A developed procedure converts the 6-hour and 24-hour precipitation isopluvial map data to an intensity-duration curve that is used for the rainfall intensity in the RM equation. The procedure for the RM that is outlined by the County Hydrology Manual as the design basis is applicable to a rainfall event with a 6-hour storm duration that falls within 45 percent to 65 percent of the event's 24-hour storm duration.

The RM formula estimates the peak runoff rate at a location as a function of the drainage area (A), runoff coefficient (C), and rainfall intensity (I) for a duration equal to the time of concentration (Tc), where Tc is the time required for water to flow from the most remote point of the subarea to the location of interest. The RM formula is written as follows:

$$Q = \mathrm{CIA}$$

Where:

- Q = peak discharge, in cubic feet per second (cfs)
- C = runoff coefficient, proportion of the rainfall that runs off the surface (unitless)
- I = average rainfall intensity for a duration equal to the Tc for the area, in inches per hour (in/hr)
- A = drainage area contributing to the location, in acres

Tc is composed of two components: initial time of concentration (Ti) and travel time (Tt). The Ti component is the time required for runoff to travel across the surface of the most remote subarea as shallow sheet flow prior to concentration, computed using the Federal Aviation Formula. The Tt component is the time required for the runoff to flow in a watercourse (e.g., swale, channel, gutter, pipe) or series of watercourses from the initial subarea to the point of interest, computed using the Kirpich formula. The formulas are described in the County Hydrology Manual.

The RM formula is based on the assumption that for constant rainfall intensity, the peak discharge rate at a location occurs when the rain that drops at the most distant point upstream arrives at the location of interest.

3.2.2 Precipitation Data

In 2004, the National Oceanic and Atmospheric Administration (NOAA) published updated precipitation-frequency estimates for arid regions of the southwestern United States, often cited as NOAA Atlas 14 (NOAA 2004). This information is available online, via the Precipitation Frequency Data Server at http://hdsc.nws.noaa.gov/hdsc/pfds/. Precipitation data was acquired from this NOAA Atlas 14 Point Precipitation website. The coordinates used to obtain precipitation data for the Project site are 32.8513 N 117.0276 W.

The County Hydrology Manual includes isopluvial maps (Appendix A) that cover the Project site. Rainfall data was compared to the NOAA data. The County data was chosen for the analysis and is summarized in Table 3-1.

Table 3-1. Design Storm Event Data

Return Period (years)	P-6 hour (inches)	P-24 hour (inches)
85 percentile	N/A	0.6
2	1.2	1.8
5	1.6	2.5
10	1.8	2.9
25	2.0	3.7
50	2.4	4.2
100	2.5	4.7

Source: County of San Diego 2003, Isopluvial Maps.

3.3 HYDRAULIC METHODOLOGY OVERVIEW

A preliminary hydraulic analysis was performed to identify appropriate stormwater control measures for the flow that passes through the Project site. The hydraulic analysis was generally based on the details and requirements presented in the San Diego County Drainage Design Manual (County Drainage Design Manual) (County of San Diego 2005) and the City of San Diego Drainage Design Manual (City of San Diego 1984). The hydraulic analysis entailed utilizing Manning's open-channel flow equation, together with the corresponding basin's 100-year peak flow rates from the hydrologic analysis, in order to appropriately and preliminarily size representative stormwater channels and other conduits. These channel and conduit sizes were applied to the length of the drainage segment for the representative flow rate.

Furthermore, different anticipated linings, geometries, and slopes of the drainage channel were examined during the preliminary design process. Channels along the cut slopes, if necessary, were recommended in the Preliminary Geotechnical Report (Petra 2011) to be spaced at every 30 vertical feet of slope. Post development flow conveyance system includes proposed earthen and riprap trapezoidal channels, earthen V-notch channels, concrete box and corrugated metal culverts, earthen broad-crest spillway, tiered drop structure/stilling basins, and smooth high density polyethylene (HDPE) storm drains. Steady state flow conditions were assumed for the channels and the normal depth was calculated using the Manning's Equation.

Manning's formula for open-channel flow is as follows:

$$Q = \frac{1.486 A \cdot R^{2/3} \cdot S^{1/2}}{n}$$

where: Q = the channel flow rate, in cubic feet per second (cfs)
A = the cross sectional area of flow, in square feet
R = the hydraulic radius of flow, in feet
S = the longitudinal slope of the channel flow path, feet/foot
n = Manning's roughness coefficient for the channel (unitless)

The Manning's n values assumed for the different channels, culverts, and storm drains are representative of the following typical channel linings:

Lining	Manning's n
Concrete or Smooth HDPE	0.013
Corrugated metal pipe	0.024
Rough channel with grass	0.030
Rough rocks or riprap	0.040

In general, concrete was the roughness assumed for the box culverts, smooth HDPE was assumed for the storm drains, corrugated metal pipe was assumed for the barrel culverts, rough channel with grass was assumed for the roughness of the V-notch channels, and smaller trapezoidal channels, and rough rocks or riprap was assumed for the larger trapezoidal channels. Once the normal depth in the channel is estimated, the velocity in the channel is calculated by dividing the channel flow rate with the cross-sectional flow area for the given channel dimensions.

$$V = Q/A$$

where: V = channel velocity, in feet per second (fps);
Q = channel flow rate, cfs; and
A = cross-sectional flow area, square feet

Flow capacity, erosion resistance, and constructability were balanced to set the cross-section, profile, and erosion protection for the post development stormwater control channels along the access road and throughout the Project site. All V-notch and trapezoidal channels were designed to have a minimum of 0.5 foot or 1 foot, respectively, of freeboard for the estimated 100-year flow rate normal depth per the County Drainage Design Manual. Culverts were sized

to have minimum flow velocity of 4 fps at a flow depth of one-fourth the culvert depth (County of San Diego 2005).

The Project will utilize a combination of source control Best Management Practices (BMPs) and low impact development (LID) design practices as a part of the hydromodification management plan. These will include bioretention areas and basins, and flow-through planters. These hydromodification facilities are shallow in nature and are designed to control the smaller storms (i.e., a storm return frequency of 2 to 10 years) by providing detention capacities that can temporarily store stormwater runoff and then release it in a controlled manner.

Due to the nature of these hydromodification facilities, they are not intended to control peak design storms, such as a 100-year storm. Instead they will have overflow control measures such as spillways that can provide a safe means for bypassing and conveying flows in excess of the maximum design capacity of the facilities. These bypass control measures and overflow spillways will be developed in more detail during the detailed design of the Project, but will be designed to pass flow from an “undetained” 100-year design event (i.e., the maximum 100-year peak flow that enters the basin) as defined in the County Hydrology Manual (County of San Diego 2003).

The hydraulic details are discussed further in Section 6.

4.0 EXISTING HYDROLOGY

The existing hydrology was conservatively evaluated for the entire watersheds in the vicinity of the Project site, and was also considered as a planning exercise for those portions of the existing terrain that lie within the developed power plant footprint presented in Appendix A. The existing watersheds in the vicinity of the Project site are delineated on Figure 2-1.

Using the methodology described in Section 3 of this Study together with a revised runoff coefficient of 0.64 for the existing undeveloped Project areas, the estimated peak flow rates (Qp) in cfs are presented in Table 4-1. The estimated peak volumes (Vp) in acre-feet (ac-ft) for the existing runoff from the site watersheds for the 2-year, 5-year, 10-year, 25-year, 50-year, and 100-year storm events are presented in Table 4-2. The preliminary assessment also included estimation of runoff rates for the 85th percentile design storm event (Q_{85}), which is utilized for designing water quality treatment BMPs as guided by the County Hydrology Manual (County of San Diego 2003). The calculations for the preliminary pre-development and post development hydrology analyses are presented in greater detail and summarized in Appendix A.

Table 4-1. Existing Hydrology – Peak Runoff Flow Rates

	Existing Peak Runoff Design Flow Rates (cfs)						
Watershed Area	Q_{85}	Q_{p-2}	Q_{p-5}	Q_{p-10}	Q_{p-25}	Q_{p-50}	Q_{p-100}
North Watershed	12.5	25.0	33.3	37.4	41.6	49.9	52.0
Central Watershed	12.3	24.6	32.8	36.9	41.0	49.2	51.2
South Watershed	13.4	26.9	35.9	40.3	44.8	53.8	56.0

Table 4-2. Existing Hydrology – Peak Runoff Volumes

	Existing Peak Runoff Design Volumes (ac-ft)						
Watershed Area	V_{85}	V_{p-2}	V_{p-5}	V_{p-10}	V_{p-25}	V_{p-50}	V_{p-100}
North Watershed	0.51	1.02	1.36	1.53	1.70	2.04	2.13
Central Watershed	0.48	0.96	1.27	1.43	1.59	1.91	1.99
South Watershed	0.56	1.12	1.49	1.68	1.86	2.23	2.33

This page intentionally left blank.

5.0 PROPOSED PROJECT DRAINAGE

The construction of the proposed Project incorporates increases in the amount of impervious area within the site. The increased impervious area will require implementation of permanent BMPs and LID design features to mitigate the effects of increased runoff from the post development land use changes by treating stormwater runoff from the Project. Stormwater quality standards based on the Storm Water Standards (City of San Diego 2012), hydromodification management measures, and the resulting post development hydrology after incorporation of the proposed BMPs and LID design features are discussed in this section. The calculations for the preliminary pre-development compared to the post development hydrology analyses are presented in greater detail and summarized in Appendix A.

5.1 WATER QUALITY

The proposed Project is a Priority Development Project (PDP), based on the Storm Water Standards. The Storm Water Standards outline a procedure of identification of potential Project pollutants and the source control BMPs that must be incorporated into the design of the Project to address the anticipated pollutants. Projects subject to PDP requirements must implement applicable source control BMPs as well as LID design practices, as described in the Storm Water Standards (City of San Diego 2012).

The Project design for compliance with the Storm Water Standards procedure is presented in the Water Quality Technical Report (Tetra Tech 2012). A detailed description of source control BMPs and LID design practices are discussed in the Water Quality Technical Report and summarized in this Study.

5.2 HYDROMODIFICATION MANAGEMENT PLAN

As a PDP, the Project is subject to the Final Hydromodification Management Criteria (SDRWQCB 2007b). Therefore, a hydromodification management strategy has been developed for the Project based on the Final HMP, dated March 2011 (Brown and Caldwell 2011). In association with the development of the Final HMP, an automated BMP sizing computer program titled the “San Diego BMP Sizing Calculator” (or BMP Sizing Calculator) was developed. The BMP Sizing Calculator is a web-based computer program and is available on the “Project Clean Water” website (Project Clean Water 2011).

The BMP Sizing Calculator is the “recommended” tool to analyze a proposed project for compliance with final hydromodification management requirements. The BMP Sizing Calculator is capable of modeling hydromodification management facilities including sizing LID facilities and a pond sizing algorithm for sizing flow control ponds.

The HMP analyses for this Project were performed for sizing the proposed Project BMPs to estimate the minimum areas and storage volumes required for the Project’s proposed bioretention facilities and flow-through planters, providing for both hydromodification flow control and water quality treatment as the design goal in accordance with the HMP. The water quality and hydromodification flow control treatment calculations, typical details of the selected treatment control BMPs, and the stormwater management features are presented and discussed in the Water Quality Technical Report (Tetra Tech 2012).

The Project will include a landscape plan for the re-vegetation of the disturbed areas within the Project site, as well as within the bioretention areas and basins. The vegetation will be maintained by the Owner for the life of the Project, as described in the Water Quality Treatment Report (Tetra Tech 2012).

5.3 POST DEVELOPMENT HYDROLOGY

5.3.1 Watershed Drainage Patterns

The placement of the Project on the site alters the existing drainage pattern within the Central watershed, where the existing drainage would pass through the ravine that the main plant site is built over. The construction of the main plant site results in the placement of fill in the drainage ravine to provide a level surface for the power plant.

The existing watercourse for the Central watershed will be intercepted just northeast of the access road to the SDG&E utility switchyard and re-routed along the northern side of the main plant site area (Figure 5-1). The proposed Central watercourse will pass under the utility switchyard access road, and bend around the SDG&E switchyard itself. The watercourse will then be directed westward through the Project switchyard, and past the northern bioretention basin, where it will turn towards the southwest and the existing Central watershed catch basin near Sycamore Landfill Road.

Figure 5-1 also shows the approximate boundaries of the subareas that were identified within the Central and South watersheds. These subareas are identified on Figure 5-1 by the area identification, such as “C01” or “S01”, where the letter refers to the watershed (C for Central and S for South) and the number is a sequential identifier for the subarea.

The Project grading in the South watershed was conducted with careful consideration for minimizing the disturbance areas and special attention was given to allowing the southern drainage to flow naturally without disruption. While the majority of the existing South watershed watercourse will not be significantly impacted by the Project, as shown on Figure 5-1, the exception is the necessary bioretention basin that encroaches into the southern channel just upstream of its existing catch basin. The potential impacts will be mitigated and the South watercourse will be appropriately designed in this section to mimic natural conditions with proper energy dissipation, hydraulic controls and erosion protection as necessary around the bioretention basin, particularly at its base or toe-of-slope as well as at the confluence of the basin’s discharge into the natural channel, which will enter the South watershed drainage approximately 250 feet upstream of its existing catch basin.

5.3.2 Project Drainage Patterns

The finished surface for the power plant must be generally level for proper site drainage and operation of the equipment. For proper drainage, minor and localized grading (approximately 0.5 percent slopes) will be necessary to direct water into the proposed underground storm drain system within the main plant site area that will eventually discharge to the perimeter surface drainage system. Similarly, concrete pads for the components of the power plant that will require secondary containment also will be sloped slightly to a sump area for concentration of collected liquids.

Stormwater drainage from the various areas within the power plant footprint will be directed to local area drains and controls. The flow from these drains will be typically dispersed to bioretention areas. Rooftop downspouts will be directed to bioretention areas or flow-through planter areas with landscaping. Runoff from parking and road areas within the Project will be directed to the bioretention basins or other similar treatment areas. The approximate boundaries of the subareas within the Project area and conceptual BMP/LID locations are shown on Figure 5-2 and are described in more detail in the Water Quality Technical Report for the conceptual HMP for the Project.

5.3.3 Project Watershed Drainage Patterns

The orientation of the power plant overlaps both the Central and South watersheds (Figure 5-1). The drainage off of the relatively flat main plant site area will be directed from the power plant area in the most efficient and effective manner and is largely independent of the original watershed boundaries. The northern plant subareas (C06 and C05) on Figure 5-2 will drain to the north into a bioretention basin. The roof drains from the engine hall and control room (C09) will be directed through the downspouts and subsurface drains to the flow-through planters along the western retaining wall structures. The southern portion of the main plant site area (S04) will be directed to a bioretention area along the southern edge of the main plant site for treatment and control, and then will drain south along the side of the access road.

The stormwater drainage from the SDG&E switchyard access road will drain to one side of the road and then south along the sides of the access road. The combination of the drainage from the south plant area and SDG&E switchyard access road results in a shift of approximately 0.7 acres from the Central watershed to the South watershed. The aerial footprint of the South watershed increases from 17.5 to 18.2 acres and the Central watershed is reduced from 14.9 to 14.2 acres.

Post development hydrology calculations were performed by considering the HMP design features and recalculating the peak flow rates and volumes. Using the RM method, Table 5-1 shows the estimated post development peak flow rates and Table 5-2 shows the estimated post development peak volumes for the existing runoff from the site watersheds for the 2-year, 5-year, 10-year, 25-year, 50-year, and 100-year storm events.

Table 5-1. Post Development Hydrology – Peak Runoff Flow Rates

	Post Development Peak Runoff Design Flow Rates (cfs)						
Watershed Area	Q_{85}	Q_{p-2}	Q_{p-5}	Q_{p-10}	Q_{p-25}	Q_{p-50}	Q_{p-100}
North Watershed	12.5	25.0	33.3	37.4	41.6	49.9	52.0
Central Watershed	11.4	22.8	30.3	34.1	37.9	45.5	47.4
South Watershed	14.0	27.9	37.2	41.9	46.5	55.8	58.2

Table 5-2. Post Development Hydrology – Peak Runoff Volumes

	Post Development Peak Runoff Design Volumes (ac-ft)						
Watershed Area	V_{85}	V_{p-2}	V_{p-5}	V_{p-10}	V_{p-25}	V_{p-50}	V_{p-100}
North Watershed	0.51	1.02	1.36	1.53	1.70	2.04	2.13
Central Watershed	0.45	0.90	1.20	1.34	1.49	1.79	1.87
South Watershed	0.58	1.16	1.55	1.74	1.93	2.32	2.42

A comparison of the existing and post development peak flow rates and runoff volumes is presented in Table 5-3. The post development peak flows and peak runoff volumes for the Central watershed are lower than the existing flows and volumes, while the post development peak flows and peak runoff volumes for the South watershed are higher than the existing condition. This is the result of the shifting in the acreage of these two watersheds, as shown in Table 5-3. The combined post development peak flow rates are slightly lower than the combined existing peak flow rates (i.e., 105.6 and 107.2 cfs, respectively). The combined peak runoff volumes for the Central and South watersheds are nearly identical for the post development and existing conditions (i.e., 4.29 and 4.32 ac-ft respectively).

Table 5-3. Comparison of Existing and Post Development Hydrology

	Comparison of Existing and Post Development Hydrology					
Watershed Area	**Existing**	**Post Development**	**Existing Peak Flow Rates**	**Post Development Peak Flow Rates**	**Existing Peak Runoff Volumes**	**Post Development Peak Runoff Volumes**
	Area (acres)	**Area (acres)**	Q_{p-100} **(cfs)**	Q_{p-100} **(cfs)**	V_{p-100} **(ac-ft)**	V_{p-100} **(ac-ft)**
North Watershed	15.9	15.9	52.0	52.0	2.13	2.13
Central Watershed	14.9	14.2	51.2	47.4	1.99	1.87
South Watershed	17.5	18.2	56.0	58.2	2.33	2.42

The combination of reducing the slope within the plant site footprint and the implementation of HMP features such as bioretention areas and flow-through planters increases the time it takes for the water to travel through the site even further by infiltrating and temporarily storing runoff water. This has the overall effect of reducing the post development peak runoff flows even more to values less than the existing pre-development peak runoff flows.

6.0 PROPOSED HYDRAULICS

The hydrologic analysis for the Project during various design storm events and the subsequent hydraulic analysis were performed with general respect to guidelines outlined in the County Hydrology Manual (County of San Diego 2003) and the San Diego County Drainage Design Manual (County of San Diego 2005) together with consideration of the City of San Diego Drainage Design Manual (City of San Diego 1984).

The preliminary hydrologic and hydraulic analyses presented herein for the Project are conservative in nature, whereas the conceptual grading plan is intended to be utilized to consider options for the construction of stormwater controls together with applicable hydromodification facilities, thereby lending for critical flexibility during the final design process. The specific and detailed grading and hydraulic control works necessary for the stormwater drainage system will be provided during final engineering design.

The objective of the Project's stormwater drainage system will be in conjunction with the siting of hydromodification facilities in order to make the most efficient and practical use of the Project site and to integrate the BMPs together with the drainage system into the ultimate site landscaping, thus maximizing the overall aesthetics of the Project area.

The final design of the Project's stormwater drainage system with its necessary hydraulic controls will be planned in accordance with the design guides and manuals referenced above. The capacity of the stormwater drainage system will also be designed in accordance with and consideration of the stormwater conveyance system immediately downstream of the Project, which principally includes the two existing catch basins and their associated culverts under Sycamore Landfill Road that drain the stormwater from the respective Central and South watersheds crossing the Project parcel.

6.1 DESIGN STRATEGIES

The post development flow conveyance system includes the following:

- Earthen and riprap trapezoidal channels
- Earthen V-notch channels
- Concrete box and corrugated metal culverts
- Earthen broad-crest spillways
- Tiered drop structure/stilling basins
- Smooth HDPE storm drains

This Study presents the conceptual details about these different structures. The designs will be updated and revised as necessary during the final Project design effort.

The proposed stormwater drainage system will incorporate a combination of earthen grass-lined and riprap-lined channels that will be engineered for functionality, erosion protection, and aesthetic purposes. However, there are a variety of engineered channel liners that may also be considered during the final design of the Project, including but not limited to gabion boxes,

cable-stayed articulated concrete block mattresses, interlocked concrete blocks, concrete revetment mats, and various types of synthetic fiber liners.

The proposed open channels and conduits for the stormwater drainage system, assuming uniform flow conditions, will be designed to safely convey the runoff from the 100-year design event with adequate and appropriate considerations for factors of safety and freeboard.

The stormwater drainage system will also consider vertical and horizontal alignments, where the minimum gradient and slope across the system will be 0.5 percent as deemed practical and the system will be equipped with super-elevated banks for curved alignments. Moreover, channel bends for supercritical flow may yield hydraulic disturbances, such as cross-wave and super-elevated flow turbulence, which will be analyzed during final design and can be minimized based upon the curvature of the channel. Furthermore, vertical and horizontal curves can be employed as necessary in order to mitigate changes in slopes, geometries, direction, and velocity vectors, particularly for those supercritical flow regimes.

Channel transitions can also occur at junctions or connections with other stormwater structures. These transitions will be properly designed to account for the expansion or contraction of flow boundaries where possible in order to mitigate anticipated turbulence.

Hydraulic jumps that may occur within the system will be designed to happen only within hydraulic structures that are necessary for energy dissipation. Abrupt changes in channel configuration will also be avoided to reduce turbulence and thus scour potential, and where these changes may occur, adequate protection such as riprap lining will be extended to the transitions.

The open channels and conduits will be designed to consider the maximum permissible velocity, whereby a given channel section will remain stable at the final design flow rate and velocity. It is important to note that the 100-year design event may not always yield the highest flow velocity, and therefore it is recommended to confirm channel stability during events smaller than the design flow.

The post development stormwater structures and hydraulic controls are shown on Figure 6-1. The calculations for the post development hydraulic analyses are presented in greater detail and summarized in Appendix B. Copies of selected San Diego Regional Standard Drawings that may apply to the Project are included in Appendix C.

The structures and controls required to address the elevational differences of the proposed Central watershed stormwater drainage channel as it flows from the plant site elevation to the catch basin elevation will require riprap channels, energy dissipation, drop structures, and stilling basins to reduce the stormwater velocities to acceptable limits. Energy dissipation will be required to minimize the potential for channel damage and erosion of the channel. This drainage channel segment will be designed to handle the same design event storm as the upstream channels and controls.

This proposed northern drainage channel is anticipated to employ a series of tiered drop structures and/or stilling basins at its terminus section as indicated on Figure 6-1. The trapezoidal channel here will use riprap protection to prevent damage to the channel as well as reduce the energy in the stormwater as it flows downhill towards the existing catch basin. The

detailed design of this channel will determine the optimum configurations and elevations for the intermediate drop structures and stilling basins.

Figure 6-1 provides an overall summary of the preliminary design and arrangement of the stormwater structures and controls for the Project. Subareas are identified by the watershed (central [C] or south [S]) and the subarea number. The drainage nodes examined for this Study are identified by the subarea(s) included either individually (i.e., C01 or S04), or in combination for nodes located further along the length of the channels (i.e., C01 – 04). These nodes, transitions, and concentration points were evaluated in the design for the preliminary hydraulic analyses discussed in the following section.

6.2 PROJECT CHANNELS AND CULVERTS

The existing stormwater drainage gully in the Central watershed will be altered due to the proposed Project development. The gully will be diverted into an earthen drainage channel and routed south of the SDG&E switchyard along the northern boundary of the main plant site area, then around the northwest area of the plant site as a riprap lined channel before discharging into the existing Central watershed's outlet catch basin. These features are shown on Figure 6-1.

This proposed engineered channel will include two fabricated concrete box culverts that will first convey stormwater under the SDG&E switchyard access road and secondly through the Project switchyard. A portion of the box culverts are anticipated to be equipped with heavy duty steel plates or grating as covers to facilitate cleaning. The channel will be designed to handle the runoff and velocities from the majority of the Central watershed including the upstream and downstream undeveloped areas, the SDG&E and plant switchyard areas, the power plant's northern areas, the associated grading areas, and the anticipated drainage from the retaining wall structures at the power plant's northwest area. The channel is designed for the 100-year storm event, and preliminary dimensions for this earthen trapezoidal channel from C01 to the concentration point at C01-04 were determined as having a bottom width of 5 feet, a design depth of 2 feet, and a side slope horizontal to vertical ratio (H:V) of 2H:1V together with a gentle longitudinal slope.

After the plant's switchyard, this channel transitions to a steeper section with the bottom width widening to 10 feet in order to accommodate increased runoff from the power plant while keeping the same 2 feet depth and 2H:1V side slopes. The channel will then transition again down the steep terrain to a proposed series of tiered drop structures with stilling basins before reaching the existing catch basin for the Central watershed, which will also serve as a final catch basin for energy dissipation. The maintenance access for this main Central watershed channel may also serve as an emergency access corridor, if necessary.

Table 6-1 presents the preliminary hydraulic analyses for the nodes or points of runoff concentration examined for this Study as depicted on Figure 6-1 for the Central watershed.

Table 6-1. Post Development Central Watershed Channels

Central Plant	Channel Description	$Q_{p\text{-}100}$ (cfs)	Manning's Open Channel Flow Analysis Parameters							Design Parameters	
			n[1/]	Slope	L, H:1 (ft)	R, H:1 (ft)	Bot. W (ft)	Depth (ft)	V (fps)	Depth (ft)	Top W (ft)
C01	Earthen Trapezoidal Channel	17.9	0.030	2.0%	2	2	5.0	0.64	4.5	2.0	13.0
	Fabricated Concrete Box Culvert		0.013	1.0%	0	0	5.0	0.54	6.7	2.0	5.0
C01-C04	Earthen Trapezoidal Channel	25.4	0.030	2.0%	2	2	5.0	0.78	5.0	2.0	13.0
	Fabricated Concrete Box Culvert		0.013	1.0%	0	0	5.0	0.68	7.5	2.0	5.0
C08 (C05-06)	Earthen Broad-Crest Spillway	12.5	0.030	1.0%	2	2	10.0	0.43	2.7	1.5	16.0
C01-C08	Riprap Trapezoidal Channel	39.4	0.040	10.0 %	2	2	10.0	0.51	7.0	2.0	18.0
	Tiered Drop Structure/Stilling Basin		0.040	25.0 %	2	2	10.0	0.39	9.4	2.0	18.0
C01-C16	Tiered Drop Structure/Stilling Basin	47.4	0.040	25.0 %	2	2	10.0	0.44	10.0	2.0	18.0
	Riprap Trapezoidal Channel		0.040	10.0 %	2	2	10.0	0.57	7.5	2.0	18.0

[1/] Manning's coefficient, n = 0.011 Steel; 0.013 for Concrete, Cast-Iron or Smooth HDPE/PVC; 0.024 for Corrugated Metal Pipe (CMP), Corrugated HDPE/PVC; 0.003 for Clean Natural Channel or Rough Channel w/ Grass; 0.004 for Rough Rocks or Riprap; 0.005 for Stony Natural Stream or Very Rough Channel w/ Grass

The existing South watershed's natural channel collects stormwater from the area to the south of the proposed main plant site area. The South watershed's bioretention basin is necessary for the Project and will slightly encroach into its southern natural watercourse just upstream of the existing catch basin. As previously mentioned, the potential impacts are expected to be minor and this channel section will be mitigated and planned to mimic natural conditions with proper energy dissipation, hydraulic controls and erosion protection as necessary around the bioretention basin, particularly at its base or toe-of-slope as well as at the basin's outfall with the natural channel. While there will be minimal modifications anticipated for the existing South watershed's channel, the existing catch basin and culvert that discharges the channel flow under the Sycamore Landfill Road will be evaluated during the design process for the potential minor increase in flows from the proposed site grading.

Earthen V-notch channels are proposed to route stormwater flows along each side of the access road to collect stormwater draining from the Project's grading in the South watershed. These V-notch channels will be preliminarily standardized to have side slopes of 4H:1V and 1H:1V and a design depth of 1.5 feet. Table 6-2 presents the preliminary hydraulic analyses for the nodes or points of runoff concentration as depicted on Figure 6-1 for the South watershed.

Table 6-2. Post Development South Watershed and Perimeter Channels

South Plant	Channel Description	Q_{p-100} (cfs)	Manning's Open Channel Flow Analysis Parameters							Design Parameters	
			n[1/]	Slope	L, H:1 (ft)	R, H:1 (ft)	Bot. W (ft)	Depth (ft)	V (fps)	Depth (ft)	Top W (ft)
S02-S03	Earthen V-Notch Channel	3.1	0.030	1.5%	1	4	0.0	0.67	2.8	1.5	7.5
S06 (S04-05)	Earthen V-Notch Channel	7.3	0.030	10.0%	4	1	0.0	0.65	6.9	1.5	7.5
S07 (S02-03)	Earthen V-Notch Channel	5.8	0.030	10.0%	1	4	0.0	0.60	6.5	1.5	7.5
S02-S07	Earthen Broad-Crest Spillway	13.1	0.030	1.0%	2	2	10.0	0.44	2.7	1.5	16.0

While the existing catch basins in the Central and South watershed are designated as the respective points of compliance, the primary points of control for the Project will be the main bioretention basins for the corresponding Central and South watersheds, located at subareas C08 and S07, respectively. The areas designated for the bioretention basins, which are intended receive the bulk of the Project runoff yielding the principal source pollutants from the main plant and access road areas during smaller storm events, will be designed with earthen broad-crested spillways in order to convey the overflow from extreme storm events. The proposed spillways will have appropriate downstream energy dissipation, hydraulic controls and erosion protection at their outlet structures prior to directing the discharge into the perimeter drainage system. Tables 6-1 and 6-2 also list the preliminary hydraulic analyses for these corresponding nodes or points of runoff concentration, which are represented on Figure 6-1 as C08 (C05-06) and S07 (S02-03) for the respective Central and South watersheds.

Earthen V-notch ditches are also planned around the Project's perimeter, where necessary, in order to cut-off and divert stormwater away from the graded areas. These ditches will also be preliminarily standardized to have side slopes of 2H:1V and a design depth of 1.5 feet. Table 6-3 presents the preliminary hydraulic analyses for the general areas of interest as depicted on Figure 6-1 for the Central and South watersheds.

Table 6-3. Project Perimeter Channels

Perimeter	Channel Description	Qp-100 (cfs)	n[1/]	Slope	L, H:1 (ft)	R, H:1 (ft)	Bottom W (ft)	Flow Depth (ft)	Velocity (fps)	Depth (ft)	Top Width (ft)
C01	Earthen V-Notch Slope Cut-off Ditch	3.6	0.030	25.0%	2	2	0.0	0.46	8.6	1.5	6.0
C12	Earthen V-Notch Slope Cut-off Ditch	3.4	0.030	20.0%	2	2	0.0	0.47	7.8	1.5	6.0
			0.030	10.0%	2	2	0.0	0.53	6.0	1.5	6.0
S01	Earthen V-Notch Slope Cut-off Ditch	3.2	0.030	20.0%	2	2	0.0	0.46	7.7	1.5	6.0
S09	Earthen V-Notch Slope Cut-off Ditch	7.7	0.030	10.0%	2	2	0.0	0.72	7.4	1.5	6.0

[1/] Manning's coefficient, n = 0.003 for Clean Natural Channel or Rough Channel w/ Grass.

Culverts are proposed for the drainage system to convey stormwater under the main, paved access road near the Project entrance. Stormwater flowing down the earthen V-notch channel along the northern portion of the access road, corresponding to node S06 (S04-05), is designed to cross the access road to the southern bioretention basin in a proposed 40 foot culvert. Similarly the stormwater draining from the slope north of the access road, runoff will flow under the access road just east of the entrance from Sycamore Landfill Road, in a proposed 80-foot long culvert which collects runoff from subareas S08 and S09. This stormwater drains to the existing catch basin for the South watershed. The proposed culverts, as shown on Figure 6-1 were estimated for the post development conditions to the nearest 10 foot length, which will provide sufficient clearance for the grading plan. The approximate dimensions, velocities, capacities and safety factors for these culverts are shown in Table 6-4.

Table 6-4. Post Development Culvert Summary

Culverts	Pipe Description	$Q_{p\text{-}100}$ (cfs)	Manning's Circular Channel Flow Analysis Parameters						Factor of Safety
			n[1/]	Slope	Dia. (ft)	Depth (ft)	V (fps)	Capacity (cfs)	
S06 (S04-05)	Corrugated Metal Pipe	7.3	0.024	5.0%	2	0.70	7.4	27.4	3.7
S08-S09	Corrugated Metal Pipe	12.3	0.024	6.0%	2	0.94	8.5	27.4	2.2

[1/] Manning's coefficient, n = 0.024 for Corrugated Metal Pipe (CMP).

6.3 PLANT AREA STORMWATER DRAINAGE

In general, the stormwater drainage system within the plant area was conservatively evaluated to have the capacity to convey the peak discharge from a 100-year design event. The plant area was conceptually studied with three proposed locations for drop inlets at the northwest, northeast, and south areas that will deliver stormwater to underground HDPE storm drains (i.e., C05, C06, and S04 on Figure 6-1). In addition, stormwater from the plant's engine hall building roof flowing through the downspouts will connect to another HDPE drain below grade (C09 on Figure 6-1). Preliminary sizing of the storm drains are presented in Table 6-5.

The storm drains associated with the Project's main plant area will then discharge to their corresponding hydromodification BMPs, which will be designed to have adequate energy dissipation at the respective outfalls. The Project's hydromodification facilities will also be designed to bypass peak design events with overflow control structures, such as spillways, that will hydraulically connect downstream to the perimeter drainage system with proper consideration for energy dissipation at the various discharge points.

Table 6-5. Post Development Storm Drains Summary

Storm Drains	Pipe Description	$Q_{p\text{-}100}$ (cfs)	Manning's Circular Channel Flow Analysis Parameters						Factor of Safety
			n[1/]	Slope	Dia. (ft)	Depth (ft)	V (fps)	Capacity (cfs)	
C05	Smooth HDPE	5.1	0.013	1.0%	2	0.65	5.8	22.6	4.4
C06	Smooth HDPE	5.3	0.013	1.0%	2	0.66	5.9	22.6	4.3
C05-C06	Smooth HDPE	10.4	0.013	1.0%	2	0.95	7.1	22.6	2.2
C09	Smooth HDPE	3.8	0.013	1.0%	2	0.62	5.5	10.5	2.8
S04	Smooth HDPE	5.1	0.013	1.0%	2	0.65	5.8	22.6	4.5

[1/] Manning's coefficient, n = 0.013 for Concrete, Cast-Iron or Smooth HDPE/PVC.

7.0 CONCLUSION

This Study presents the hydrologic and hydraulic analyses for the Project that are conservative in nature. The existing and post development conditions including the peak flow rates and peak runoff volumes were determined using the Rational method based on the hydrologic methodology and criteria described in the San Diego County Hydrology Manual and City of San Diego Drainage Design Manual.

The BMP Sizing Calculator was used to identify the on-site source control BMP/LID measures (i.e., bioretention area and basins, and flow-through planters) to meet the flow control and water quality treatment requirements in accordance with the HMP. Details on the selected treatment control BMPs and the stormwater management features are presented and discussed in the Water Quality Technical Report.

The orientation of the power plant overlaps both the Central and South watersheds. The drainage from portions of the main plant site area and the SDG&E switchyard access road are conveyed to the South watershed instead of the Central watershed, which results in a slight shift (0.7 acres) in the overall acreage of the two watersheds.

The combination of reducing the slope within the plant site footprint and the implementation of HMP features such as bioretention areas and flow-through planters increases the time it takes for the water to travel through the site even further by infiltrating and temporarily storing runoff water. This has the overall benefiting effect of reducing the post development peak runoff flows even more to values less than the existing pre-development peak runoff flows.

The shift in the acreage between the Central and South watersheds results in slight changes in the post development peak flows and peak runoff volumes from the existing flows and volumes. However, the combined post development peak flow rates are slightly lower than the combined existing peak flow rates (i.e., 105.6 and 107.2 cfs, respectively). The combined peak runoff volumes for the Central and South watersheds are nearly identical for the post development and existing conditions (i.e., 4.29 and 4.32 ac-ft, respectively).

The overall design and site planning of the Project, coupled with the stormwater drainage controls, BMPs, and LID features incorporated into this preliminary design would not result in a significant change to the stormwater drainage characteristics from the Project site. The ultimate responsibility for a functional and appropriate drainage design lies with the engineer in charge of the final Project design. The execution of this responsibility will require additional analyses, consultation with the agencies, and further design of the stormwater controls as additional information becomes available, such as the final geotechnical investigation.

This page intentionally left blank.

8.0 REFERENCES

Brown and Caldwell. 2011. Final Hydromodification Management Plan. Prepared for County of San Diego, California. March 25.

City of San Diego. 1984. Drainage Design Manual. April.

----------. 2009. San Diego Municipal Code Land Development Code Landscape Standards. November 27.

----------. 2012. Storm Water Standards. City of San Diego. January 20.

County of San Diego. 2003. San Diego County Hydrology Manual. Prepared by the County of San Diego Department of Public Works Flood Control Section. June.

----------. 2005. San Diego County Drainage Design Manual. Prepared by the County of San Diego Department of Public Works Flood Control Section. July.

NOAA. 2004. NOAA Atlas 14. Available at: http://hdsc.nws.noaa.gov/hdsc/pfds/

Petra Geotechnical, Inc. (Petra). 2011. Preliminary Geologic/Geotechnical Investigation, Proposed Peaker Plant, APN#366-081-2500, Quail Brush Project, City of San Diego, San Diego County, California. Prepared for Cogentrix Energy, LLC. July 8.

Project Clean Water. 2011. BMP Sizing Calculator, Version 3.0, updated April 2011. Available at: http://www.projectcleanwater.org/html/wq_susmp.html

SDRWQCB. 2007a. Water Quality Control Plan for the San Diego Basin. Adopted by the California Regional Water Quality Control Board San Diego Region on September 8, 1994, Approved by the State Water Resources Control Board on December 13, 1994 and the Office of Administrative Law on April 26, 1995. With amendments effective prior to April 25, 2007. Available at: http://www.swrcb.ca.gov/sandiego/water_issues/programs/basin_plan/

----------. 2007b. San Diego Region Permit Order R9-2007-0001 available at: http://www.swrcb.ca.gov/rwqcb9/water_issues/programs/stormwater/sd_stormwater.shtml

Tetra Tech 2012. Water Quality Technical Report for the Quail Brush Generation Project. September.

This page intentionally left blank.

FIGURES

This page intentionally left blank.

Printing Date: 9/20/2012 3:41:47 PM
Path: P:\GIS\Projects\4346_QuailBrush\MXD\Water\1-1_ProjectVicinity.mxd

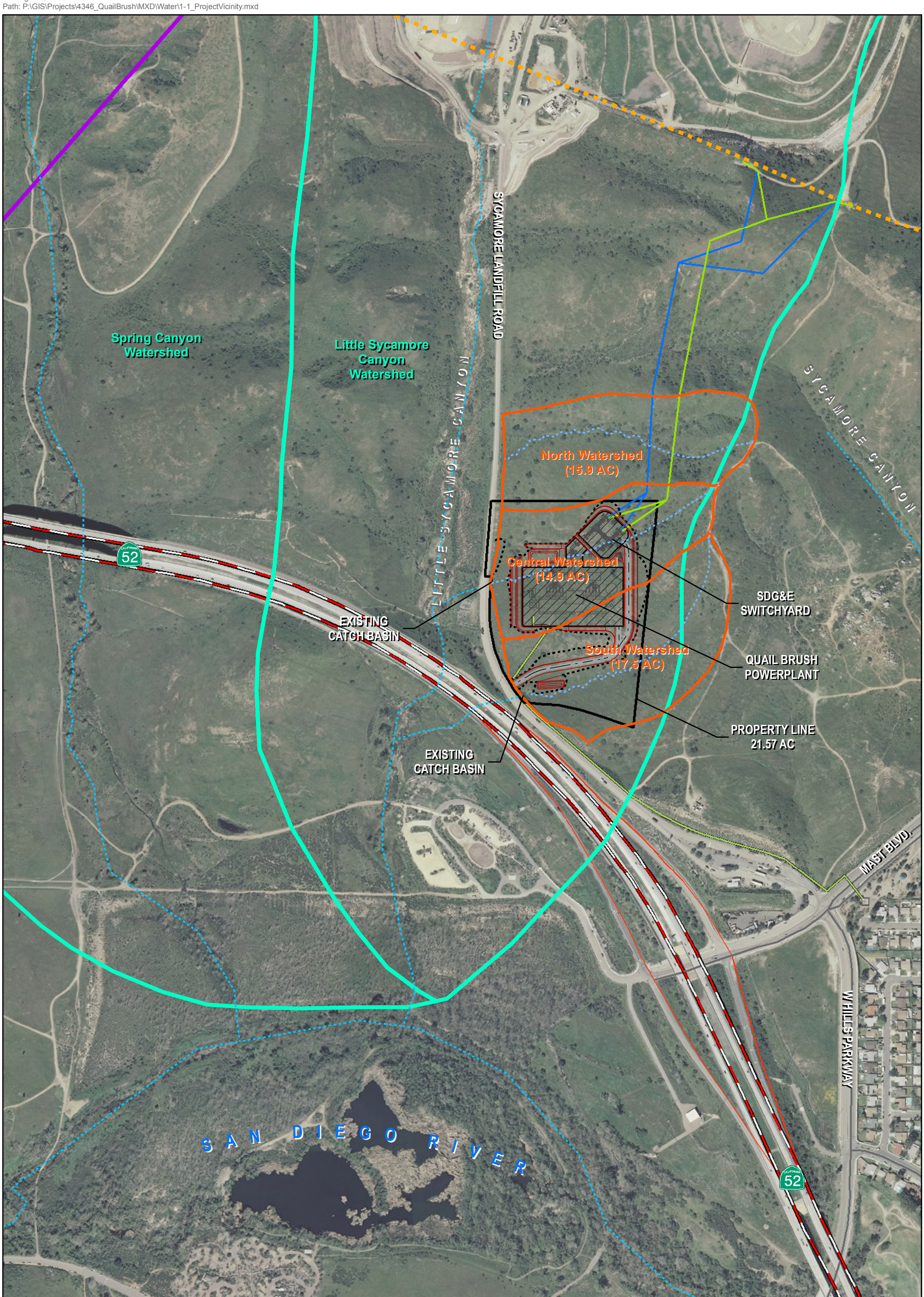

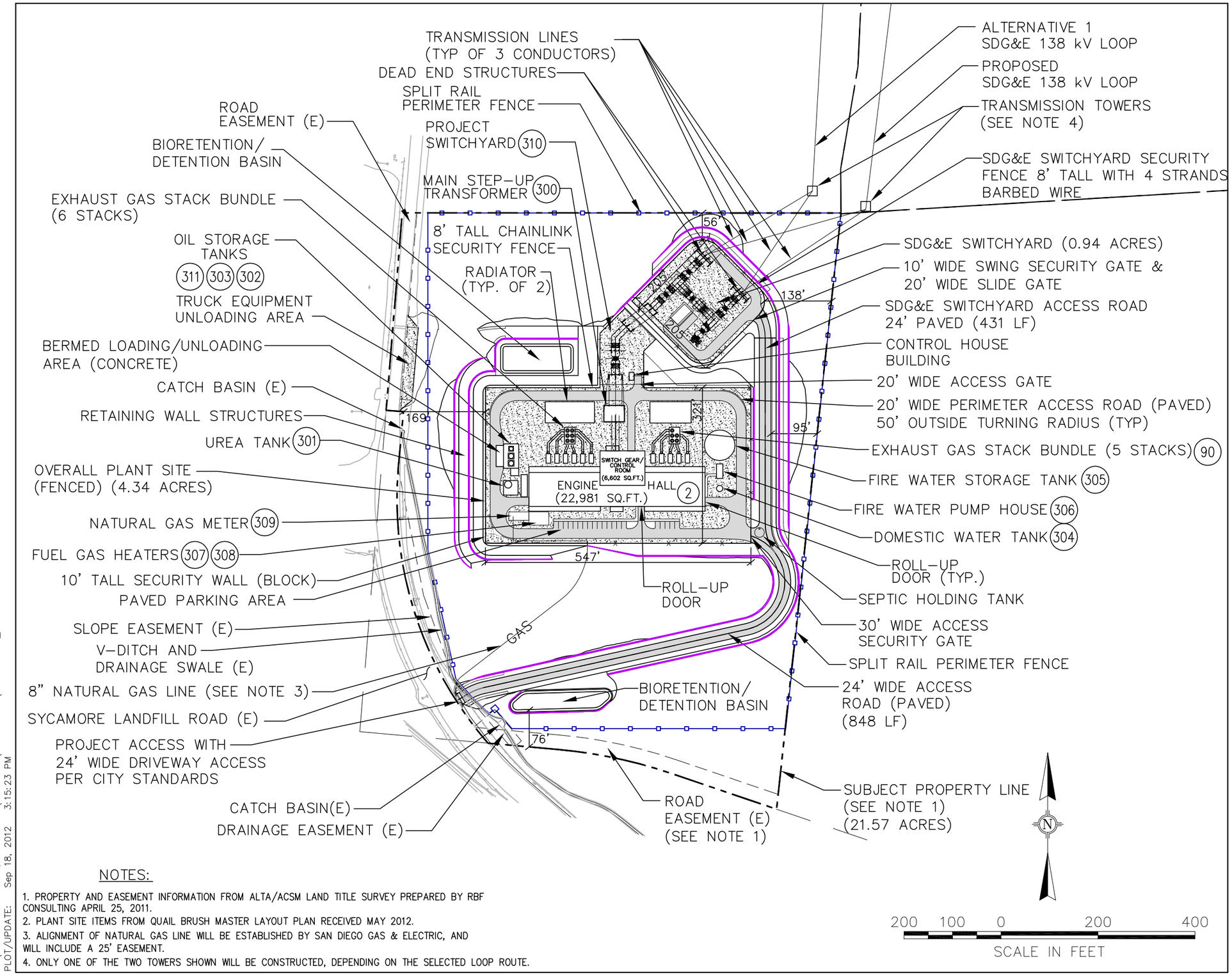

LEGEND:

GAL.	GALLON
L.F.	LINEAR FEET
SQ.FT.	SQUARE FEET
TYP.	TYPICAL
(E)	EXISTING
SDG&E	SAN DIEGO GAS AND ELECTRIC
310	ITEM NO.
	ASPHALT PAVEMENT
	GRAVEL
—x—	CHAINLINK FENCE
— - - —	PARCEL BOUNDARY
— GAS —	NEW NATURAL GAS LINE
	RETAINING WALLS

POWER PLANT EQUIPMENT (SEE NOTE 2)

Item No	Pcs.	DESCRIPTION	DESCRIPTION Dia.	Ht.	Cap.(G)
2	1	Engine Hall	–	24'	
71	2	Radiator Sets		18' H	
90	11	Exhaust gas Stack	4' ø	70' H	
300	1	Main Step-Up Transformer		30' H	
301	1	UreaTank	13' ø	22' H	20,000
302	1	Used Oil Tank	10' ø	20' H	10,000
303	1	New Oil Tank	10' ø	20' H	10,000
304	1	Domestic Water Tank	10' ø	20' H	10,000
305	1	Fire Water Tank	60' ø	30' H	600,000
306	1	Fire Water Pumphouse		STACK=30'H	
307	1	Warm Start Gas Heater		STACK=30'H	
308	1	Fuel Gas Heater		STACK=30'H	
309	1	Natural Gas Metering Station		6' H	
310	1	Facility 230kV Switchyard		52' H Mast	
311	1	Maintenance Oil Tank	8' ø	16' H	6,000

NOTES:

1. PROPERTY AND EASEMENT INFORMATION FROM ALTA/ACSM LAND TITLE SURVEY PREPARED BY RBF CONSULTING APRIL 25, 2011.
2. PLANT SITE ITEMS FROM QUAIL BRUSH MASTER LAYOUT PLAN RECEIVED MAY 2012.
3. ALIGNMENT OF NATURAL GAS LINE WILL BE ESTABLISHED BY SAN DIEGO GAS & ELECTRIC, AND WILL INCLUDE A 25' EASEMENT.
4. ONLY ONE OF THE TWO TOWERS SHOWN WILL BE CONSTRUCTED, DEPENDING ON THE SELECTED LOOP ROUTE.

QUAIL BRUSH GENERATION PROJECT

FIGURE 1-2
SITE PLOT PLAN

TETRA TECH EC, INC.

Cogentrix

P:\4346-COGENTRIX QUAIL BRUSH\CAD-S3B\PLANS-S3B\DS-FIG 1-2_SITE PLAN.DWG
PLOT/UPDATE: Sep 18, 2012 3:15:23 PM

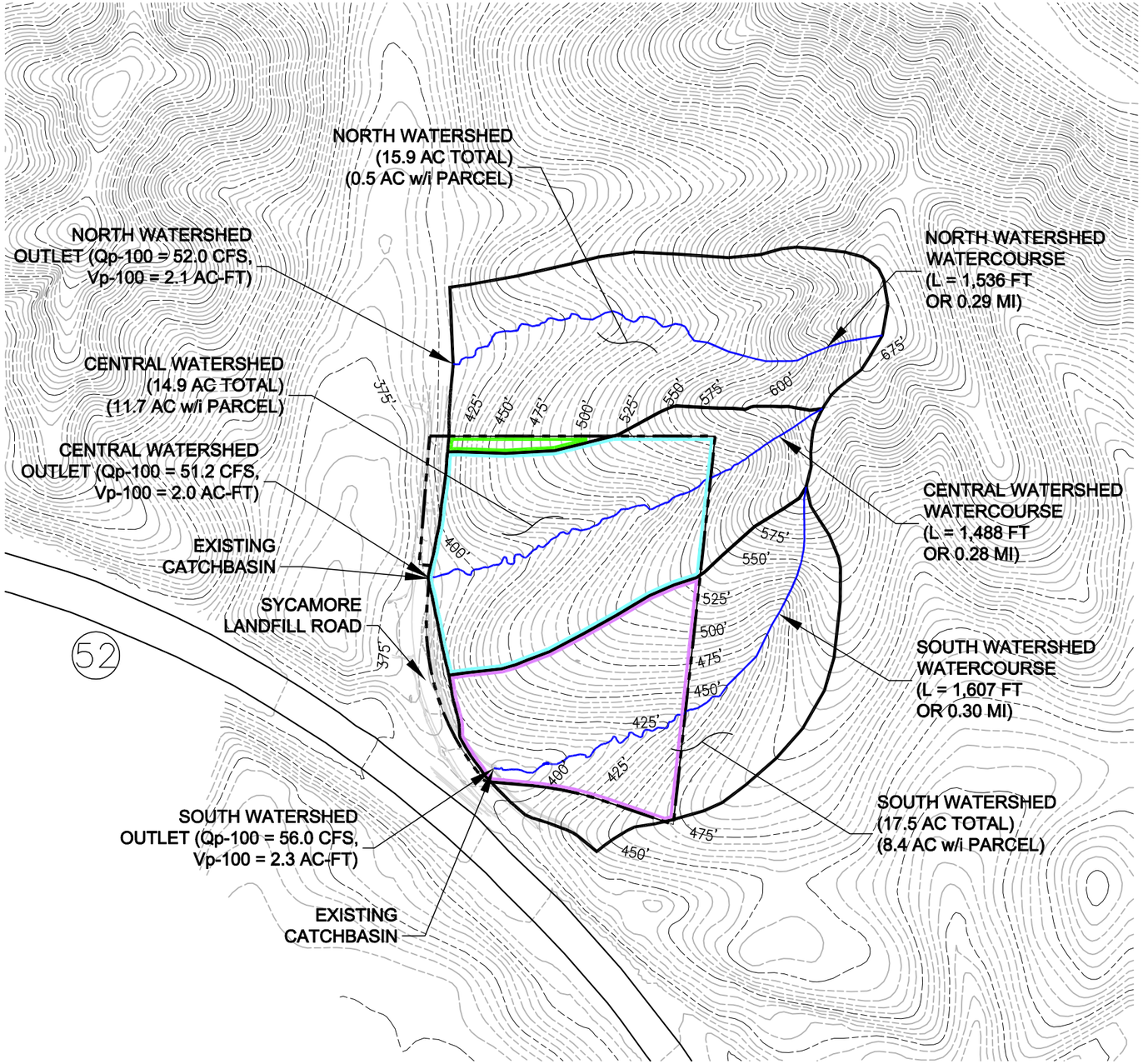

LEGEND:

AC	ACRES
CFS	CUBIC FEET PER SECOND
FT	FEET
L	LENGTH
MI	MILE
Q	FLOWRATE
Vp	PEAK RUNOFF VOLUME (AC-FT)

- 500' — EXISTING CONTOUR
- EXISTING CONTOUR
- PARCEL BOUNDARY
- WATERSHED BOUNDARY (APPROXIMATE)
- ESTIMATED DRAINAGE WATERCOURSE
- PORTION OF NORTH WATERSHED WITHIN PARCEL BOUNDARY
- PORTION OF CENTRAL WATERSHED WITHIN PARCEL BOUNDARY
- PORTION OF SOUTH WATERSHED WITHIN PARCEL BOUNDARY

NOTES:

1. TOPOGRAPHY FROM INTERMAP TECHNOLOGIES VERSION 1.5 DIGITAL TERRAIN MODEL DATA.
2. PROPERTY INFORMATION FROM ALTA/ACSM LAND TITLE SURVEY PREPARED BY RBF CONSULTING APRIL 25, 2011.

400 200 0 400 800

SCALE IN FEET

QUAIL BRUSH GENERATION PROJECT

FIGURE 2-1
EXISTING HYDROLOGY

TETRA TECH EC, INC.

Cogentrix

P:\4346-COGENTRIX QUAIL BRUSH\CAD-S3B\PLANS-S3B\PRE DEV HYDRO\DS-FIG-2-1_PRE DEV HYDRO.DWG
PLOT/UPDATE: Sep 18, 2012 4:22:19 PM

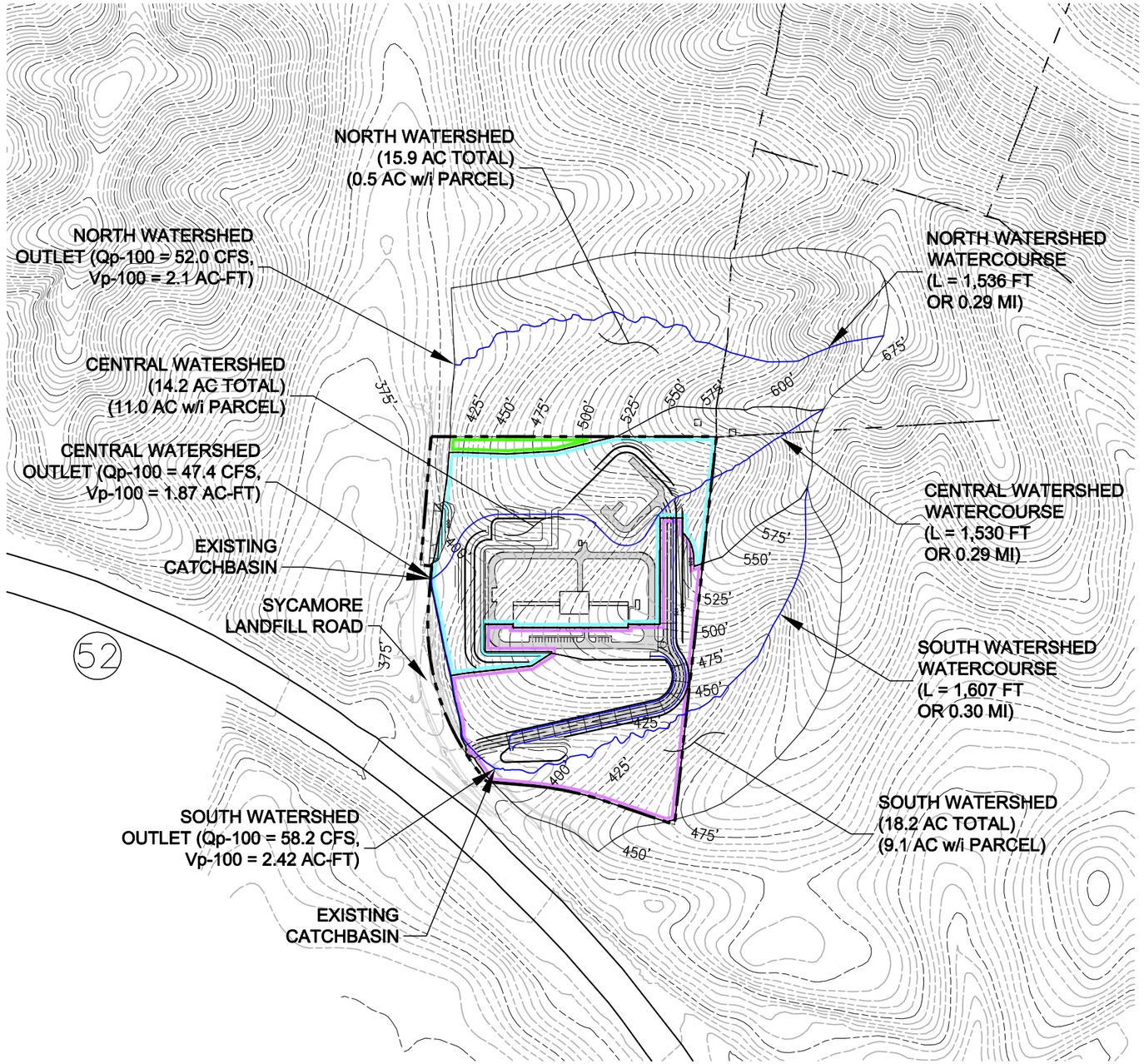

LEGEND:

AC	ACRES
CFS	CUBIC FEET PER SECOND
FT	FEET
L	LENGTH
MI	MILE
Q	FLOWRATE
Vp	PEAK RUNOFF VOLUME (AC-FT)

- 500' — EXISTING CONTOUR
- EXISTING CONTOUR
- PARCEL BOUNDARY
- WATERSHED BOUNDARY (APPROXIMATE)
- ESTIMATED DRAINAGE WATERCOURSE
- PORTION OF NORTH WATERSHED WITHIN PARCEL BOUNDARY
- PORTION OF CENTRAL WATERSHED WITHIN PARCEL BOUNDARY
- PORTION OF SOUTH WATERSHED WITHIN PARCEL BOUNDARY

NOTES:

1. TOPOGRAPHY FROM INTERMAP TECHNOLOGIES VERSION 1.5 DIGITAL TERRAIN MODEL DATA.
2. PROPERTY INFORMATION FROM ALTA/ACSM LAND TITLE SURVEY PREPARED BY RBF CONSULTING APRIL 25, 2011.

QUAIL BRUSH GENERATION PROJECT

FIGURE 5-1
PROPOSED POST DEVELOPMENT HYDROLOGY

TETRA TECH EC, INC.

Cogentrix

P:\4346-COGENTRIX QUAIL BRUSH\CAD-S3B\PLANS-S3B\PRE DEV HYDRO\DS-FIG-5-1_POST DEV HYDRO.DWG
PLOT/UPDATE: Sep 18, 2012 7:7:33 PM

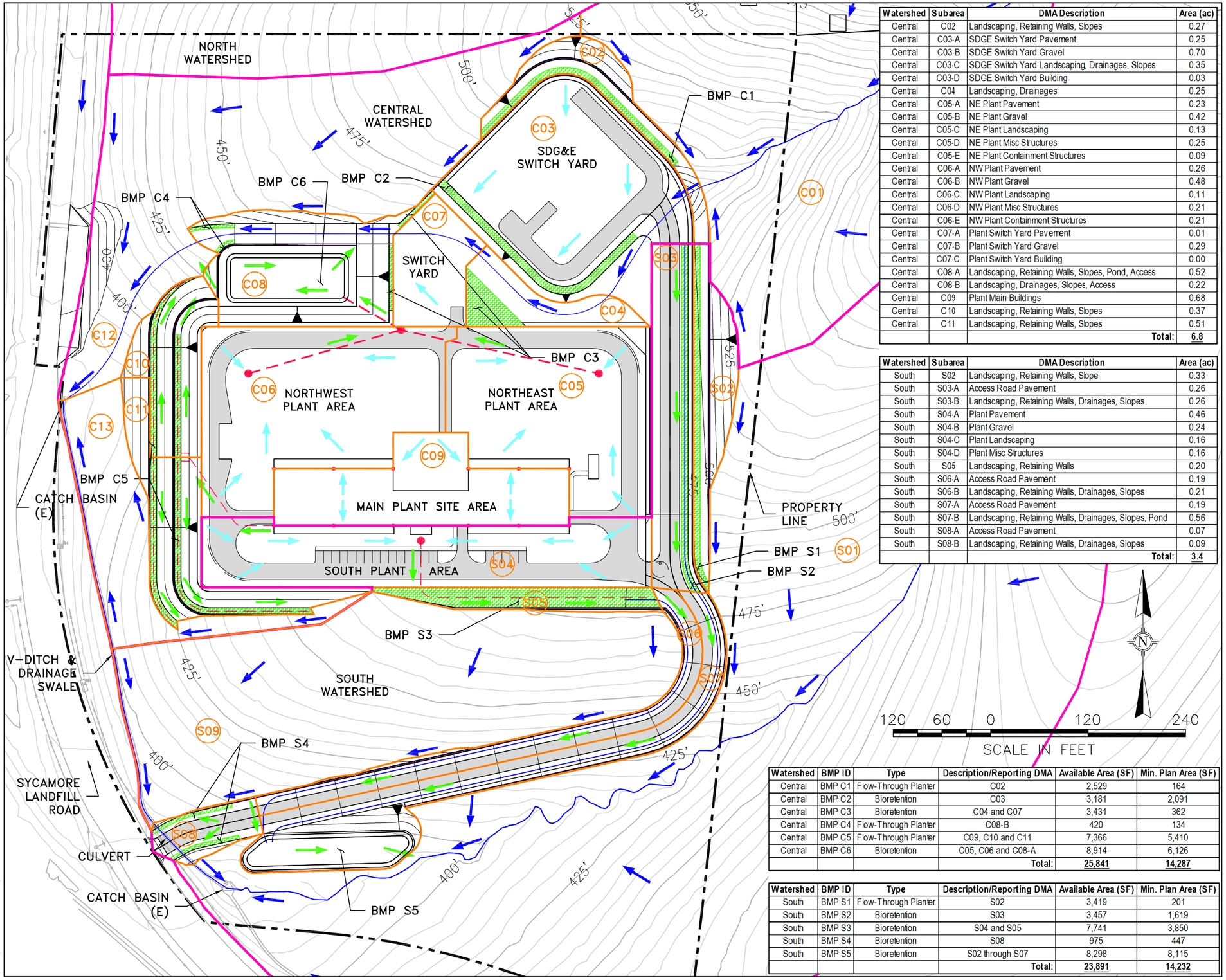

Watershed	Subarea	DMA Description	Area (ac)
Central	C02	Landscaping, Retaining Walls, Slopes	0.27
Central	C03-A	SDGE Switch Yard Pavement	0.25
Central	C03-B	SDGE Switch Yard Gravel	0.70
Central	C03-C	SDGE Switch Yard Landscaping, Drainages, Slopes	0.35
Central	C03-D	SDGE Switch Yard Building	0.03
Central	C04	Landscaping, Drainages	0.25
Central	C05-A	NE Plant Pavement	0.23
Central	C05-B	NE Plant Gravel	0.42
Central	C05-C	NE Plant Landscaping	0.13
Central	C05-D	NE Plant Misc Structures	0.25
Central	C05-E	NE Plant Containment Structures	0.09
Central	C06-A	NW Plant Pavement	0.26
Central	C06-B	NW Plant Gravel	0.48
Central	C06-C	NW Plant Landscaping	0.11
Central	C06-D	NW Plant Misc Structures	0.21
Central	C06-E	NW Plant Containment Structures	0.21
Central	C07-A	Plant Switch Yard Pavement	0.01
Central	C07-B	Plant Switch Yard Gravel	0.29
Central	C07-C	Plant Switch Yard Building	0.00
Central	C08-A	Landscaping, Retaining Walls, Slopes, Pond, Access	0.52
Central	C08-B	Landscaping, Drainages, Slopes, Access	0.22
Central	C09	Plant Main Buildings	0.68
Central	C10	Landscaping, Retaining Walls, Slopes	0.37
Central	C11	Landscaping, Retaining Walls, Slopes	0.51
		Total:	6.8

Watershed	Subarea	DMA Description	Area (ac)
South	S02	Landscaping, Retaining Walls, Slope	0.33
South	S03-A	Access Road Pavement	0.26
South	S03-B	Landscaping, Retaining Walls, Drainages, Slopes	0.26
South	S04-A	Plant Pavement	0.46
South	S04-B	Plant Gravel	0.24
South	S04-C	Plant Landscaping	0.16
South	S04-D	Plant Misc Structures	0.16
South	S05	Landscaping, Retaining Walls	0.20
South	S06-A	Access Road Pavement	0.19
South	S06-B	Landscaping, Retaining Walls, Drainages, Slopes	0.21
South	S07-A	Access Road Pavement	0.19
South	S07-B	Landscaping, Retaining Walls, Drainages, Slopes, Pond	0.56
South	S08-A	Access Road Pavement	0.07
South	S08-B	Landscaping, Retaining Walls, Drainages, Slopes	0.09
		Total:	3.4

Watershed	BMP ID	Type	Description/Reporting DMA	Available Area (SF)	Min. Plan Area (SF)
Central	BMP C1	Flow-Through Planter	C02	2,529	164
Central	BMP C2	Bioretention	C03	3,181	2,091
Central	BMP C3	Bioretention	C04 and C07	3,431	362
Central	BMP C4	Flow-Through Planter	C08-B	420	134
Central	BMP C5	Flow-Through Planter	C09, C10 and C11	7,366	5,410
Central	BMP C6	Bioretention	C05, C06 and C08-A	8,914	6,126
			Total:	25,841	14,287

Watershed	BMP ID	Type	Description/Reporting DMA	Available Area (SF)	Min. Plan Area (SF)
South	BMP S1	Flow-Through Planter	S02	3,419	201
South	BMP S2	Bioretention	S03	3,457	1,619
South	BMP S3	Bioretention	S04 and S05	7,741	3,850
South	BMP S4	Bioretention	S08	975	447
South	BMP S5	Bioretention	S02 through S07	8,298	8,115
			Total:	23,891	14,232

LEGEND:

SF	SQUARE FEET
E	EXISTING
U/G	UNDERGROUND
C	CENTRAL WATERSHED
S	SOUTH WATERSHED
C01	SUB AREA ID
SDG&E	SAN DIEGO GAS & ELECTRIC
	PAVEMENT
	BMP/LID
	EXISTING DRAINAGE WATERCOURSE
	PROPOSED DRAINAGE WATERCOURSE
500'	EXISTING CONTOUR
	WATERSHED BOUNDARY
	SUB-BASIN AREA
	SURFACE WATER FLOW
	PLANT SURFACE WATER FLOW
	BMP/LID SURFACE WATER FLOW
	DROP INLET WITH U/G DRAIN

NOTES:

1. TOPOGRAPHY FROM INTERMAP TECHNOLOGIES VERSION 1.5 DIGITAL TERRAIN MODEL DATA.
2. PROPERTY INFORMATION FROM ALTA/ACSM LAND TITLE SURVEY PREPARED BY RBF CONSULTING APRIL 25, 2011.

QUAIL BRUSH GENERATION PROJECT

FIGURE 5-2
CONCEPTUAL BMP/LID LOCATIONS

TETRA TECH EC, INC.

Cogentrix

P:\4346-COGENTRIX QUAIL BRUSH\CAD-S3B\PLANS-S3B\DS FIG 5-2 CONCEP BMP LID LOC.DWG
PLOT/UPDATE: Sep 20, 2012 5:4:48 PM

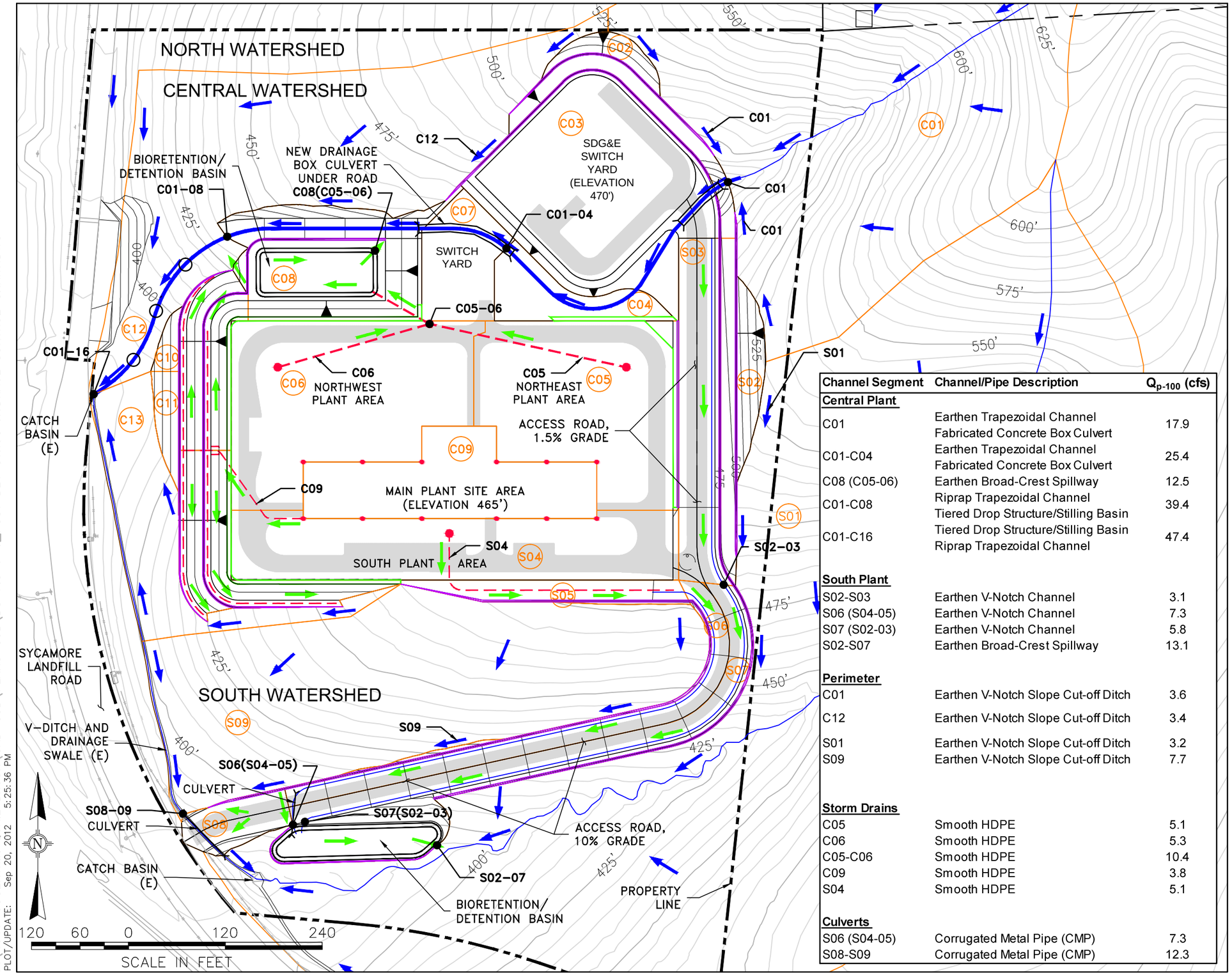

Channel Segment	Channel/Pipe Description	$Q_{p\text{-}100}$ (cfs)
Central Plant		
C01	Earthen Trapezoidal Channel Fabricated Concrete Box Culvert	17.9
C01-C04	Earthen Trapezoidal Channel Fabricated Concrete Box Culvert	25.4
C08 (C05-06)	Earthen Broad-Crest Spillway	12.5
C01-C08	Riprap Trapezoidal Channel Tiered Drop Structure/Stilling Basin	39.4
C01-C16	Tiered Drop Structure/Stilling Basin Riprap Trapezoidal Channel	47.4
South Plant		
S02-S03	Earthen V-Notch Channel	3.1
S06 (S04-05)	Earthen V-Notch Channel	7.3
S07 (S02-03)	Earthen V-Notch Channel	5.8
S02-S07	Earthen Broad-Crest Spillway	13.1
Perimeter		
C01	Earthen V-Notch Slope Cut-off Ditch	3.6
C12	Earthen V-Notch Slope Cut-off Ditch	3.4
S01	Earthen V-Notch Slope Cut-off Ditch	3.2
S09	Earthen V-Notch Slope Cut-off Ditch	7.7
Storm Drains		
C05	Smooth HDPE	5.1
C06	Smooth HDPE	5.3
C05-C06	Smooth HDPE	10.4
C09	Smooth HDPE	3.8
S04	Smooth HDPE	5.1
Culverts		
S06 (S04-05)	Corrugated Metal Pipe (CMP)	7.3
S08-S09	Corrugated Metal Pipe (CMP)	12.3

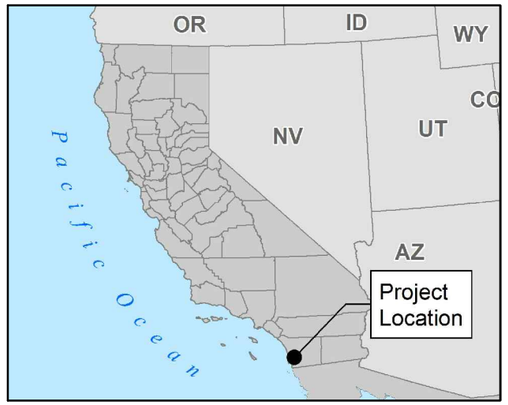

LEGEND:

SF	SQUARE FEET
CF	CUBIC FEET
E	EXISTING
U/G	UNDERGROUND
C	CENTRAL WATERSHED
S	SOUTH WATERSHED

C01 SUB AREA ID

- EXISTING DRAINAGE WATERCOURSE
- PROPOSED DRAINAGE WATERCOURSE
- 500' EXISTING CONTOUR
- EXISTING CONTOUR
- PROPOSED CONTOUR
- SURFACE WATER FLOW
- BMP/LID SURFACE WATER FLOW
- DROP INLET WITH U/G DRAIN
- SUB-BASIN AREA
- RETAINING WALLS
- STILLING BASIN

NOTES:

1. TOPOGRAPHY FROM INTERMAP TECHNOLOGIES VERSION 1.5 DIGITAL TERRAIN MODEL DATA.
2. PROPERTY INFORMATION FROM ALTA/ACSM LAND TITLE SURVEY PREPARED BY RBF CONSULTING APRIL 25, 2011.

QUAIL BRUSH GENERATION PROJECT

FIGURE 6-1
POST DEVELOPMENT STRUCTURES AND HYDRAULIC CONTROLS

TETRA TECH EC, INC. Cogentrix

P:\4346-COGENTRIX QUAIL BRUSH\CAD-S3B\PLANS-S3B\DS-FIG 6-1_POST DEV STRUC HYDRAUL CONTROL-CHART.DWG
PLOT/UPDATE: Sep 20, 2012 5:25:36 PM

APPENDIX A
Support Documents for Hydrologic Calculations

This page intentionally left blank.

TETRA TECH EC,INC

	CLIENT: Cogentrix	MADE BY:	GPH/CEB	DATE:	9/20/2012
JOB TITLE:	Quail Brush Generation Project	CHECKED:	SO	JOB # :	106-4346
SUBJECT:	Prelim. Watershed Hydrology Analysis - **Rational Method**	APPROVED:	WLS	SHEET:	Summary

Quail Brush Site - Summary of Preliminary Watershed Hydrology Analysis:

	Pre-Development Peak Runoff Design Flow Rates (cfs)						
Watershed Area	Q_{85}	Q_{p-2}	Q_{p-5}	Q_{p-10}	Q_{p-25}	Q_{p-50}	Q_{p-100}
North Watershed	**12.5**	**25.0**	**33.3**	**37.4**	**41.6**	**49.9**	**52.0**
Central Watershed	**12.3**	**24.6**	**32.8**	**36.9**	**41.0**	**49.2**	**51.2**
South Watershed	**13.4**	**26.9**	**35.9**	**40.3**	**44.8**	**53.8**	**56.0**

	Pre-Development Peak Runoff Design Volumes (ac-ft)						
Watershed Area	V_{85}	V_{p-2}	V_{p-5}	V_{p-10}	V_{p-25}	V_{p-50}	V_{p-100}
North Watershed	**0.51**	**1.02**	**1.36**	**1.53**	**1.70**	**2.04**	**2.13**
Central Watershed	**0.48**	**0.96**	**1.27**	**1.43**	**1.59**	**1.91**	**1.99**
South Watershed	**0.56**	**1.12**	**1.49**	**1.68**	**1.86**	**2.23**	**2.33**

	Post-Development Peak Runoff Design Flow Rates (cfs)						
Watershed Area	Q_{85}	Q_{p-2}	Q_{p-5}	Q_{p-10}	Q_{p-25}	Q_{p-50}	Q_{p-100}
North Watershed	**12.5**	**25.0**	**33.3**	**37.4**	**41.6**	**49.9**	**52.0**
Central Watershed	**11.4**	**22.8**	**30.3**	**34.1**	**37.9**	**45.5**	**47.4**
South Watershed	**14.0**	**27.9**	**37.2**	**41.9**	**46.5**	**55.8**	**58.2**

	Post-Development Peak Runoff Design Volumes (ac-ft)						
Watershed Area	V_{85}	V_{p-2}	V_{p-5}	V_{p-10}	V_{p-25}	V_{p-50}	V_{p-100}
North Watershed	**0.51**	**1.02**	**1.36**	**1.53**	**1.70**	**2.04**	**2.13**
Central Watershed	**0.45**	**0.90**	**1.20**	**1.34**	**1.49**	**1.79**	**1.87**
South Watershed	**0.58**	**1.16**	**1.55**	**1.74**	**1.93**	**2.32**	**2.42**

Quail Brush Site (North Watershed) - Preliminary Pre-Development Watershed Hydrology Analysis:

The watershed characteristics were estimated utilizing GIS, AutoCAD and Civil3D.
The runoff coefficient was conservatively estimated for undeveloped areas utilizing the CALTRANS Highway Design Manual.
The time of concentration was estimated utilizing FAA's Formula & Kirpich's Formula, appropriate for small mountainous basins.
The rainfall intensity was conservatively estimated by procedures outlined in San Diego County/City's Hydrology Manual.
The peak runoff flow rates were computed with the Rational Method per San Diego County/City's Hydrology Manual.

Rainfall Intensity formula: $I = 7.44 * P_{6\text{-}hr} * T_c^{-0.645}$

FAA's formula: $T_i = 1.8 * (1.1 - C) * D^{0.5} * S^{-0.333}$

Kirpich's formula: $T_t = 60 * (11.9\ L^3 / H)^{0.385}$

Where:

$P_{6\text{-}hr}$ = 6-hour precipitation event for a given design storm, inches
T_c = $T_i + T_t$ (time of concentration), minutes
T_i = Initial overland flow time, minutes
C = Runoff coefficient, unitless
D = Initial watercourse distance, feet
S_i = Initial surface slope, %
T_t = Travel time, minutes
L = Watercourse length, miles
S_e = Effective watercourse slope, %
H = Change in elevation along effective slope line, feet

San Diego County/City Hydrology Manual:

Quail Brush Site Rainfall Isopluvials

Return (years)	$P_{6\text{-}hr}$ (inches)	$P_{24\text{-}hr}$ (inches)	P_6/P_{24} (%)
2	1.2	1.8	66.7
5	1.6	2.5	64.0
10	1.8	2.9	62.1
25	2.0	3.7	54.1
50	2.4	4.2	57.1
100	2.5	4.7	53.2

Rational Method: $Q_p = C\ I\ A$ $V_p = C\ P_{6\text{-}hr}\ A$

Where:

Q_p = Peak runoff flow rate, cfs
V_p = Peak runoff volume, ac-ft
C = Runoff coefficient, unitless
I = Rainfall intensity (for duration equal to T_c), in/hr
A = Drainage area, acres

	Water Quality Design Storm Event
P_{85} (inches)	0.6
I (in/hr)	1.2
Q_{85} (ac-in/hr)	**12.6**
Q_{85} (cfs)	**12.5**
V_{85} (ac-ft)	**0.51**

Pre-Development Watershed Characteristics:

A =	15.9	acres
L =	0.29	miles
S_e =	13.7	%
H =	206.4	feet
S_i =	5.0	%
D =	30.0	feet
C =	**0.64**	

Note:
The 85th percentile is a 24-hour rainfall total. It represents a value such that 85% of the observed 24-hour rainfall totals will be less than that value.

Pre-Development Watershed Calculations:

T_i =	2.7	minutes
T_t =	4.7	minutes
T_c =	7.4	minutes

	Design Storm Events					
Return (years)	2	5	10	25	50	100
$P_{6\text{-}hr}$ (inches)	1.2	1.6	1.8	2.0	2.4	2.5
I (in/hr)	2.5	3.3	3.7	4.1	4.9	5.1
Q_p (ac-in/hr)	**25.2**	**33.5**	**37.7**	**41.9**	**50.3**	**52.4**
Q_p (cfs)	**25.0**	**33.3**	**37.4**	**41.6**	**49.9**	**52.0**
V_p (ac-ft)	**1.0**	**1.4**	**1.5**	**1.7**	**2.0**	**2.1**

Quail Brush Site (Central Watershed) - Preliminary Pre-Development Watershed Hydrology Analysis:

The watershed characteristics were estimated utilizing GIS, AutoCAD and Civil3D.
The runoff coefficient was conservatively estimated for undeveloped areas utilizing the CALTRANS Highway Design Manual.
The time of concentration was estimated utilizing FAA's Formula & Kirpich's Formula, appropriate for small mountainous basins.
The rainfall intensity was conservatively estimated by procedures outlined in San Diego County/City's Hydrology Manual.
The peak runoff flow rates were computed with the Rational Method per San Diego County/City's Hydrology Manual.

Rainfall Intensity formula: $I = 7.44 * P_{6\text{-}hr} * T_c^{-0.645}$

FAA's formula: $T_i = 1.8 * (1.1 - C) * D^{0.5} * S^{-0.333}$

Kirpich's formula: $T_t = 60 * (11.9\ L^3 / H)^{0.385}$

Where:

$P_{6\text{-}hr}$ = 6-hour precipitation event for a given design storm, inches
T_c = $T_i + T_t$ (time of concentration), minutes
T_i = Initial overland flow time, minutes
C = Runoff coefficient, unitless
D = Initial watercourse distance, feet
S_i = Initial surface slope, %
T_t = Travel time, minutes
L = Watercourse length, miles
S_e = Effective watercourse slope, %
H = Change in elevation along effective slope line, feet

San Diego County/City Hydrology Manual:

Quail Brush Site Rainfall Isopluvials

Return (years)	$P_{6\text{-}hr}$ (inches)	$P_{24\text{-}hr}$ (inches)	P_6/P_{24} (%)
2	1.2	1.8	66.7
5	1.6	2.5	64.0
10	1.8	2.9	62.1
25	2.0	3.7	54.1
50	2.4	4.2	57.1
100	2.5	4.7	53.2

Rational Method: $Q_p = C\ I\ A$ $V_p = C\ P_{6\text{-}hr}\ A$

Where:

Q_p = Peak runoff flow rate, cfs
V_p = Peak runoff volume, ac-ft
C = Runoff coefficient, unitless
I = Rainfall intensity (for duration equal to T_c), in/hr
A = Drainage area, acres

	Water Quality Design Storm Event
P_{85} (inches)	0.6
I (in/hr)	1.3
Q_{85} (ac-in/hr)	**12.4**
Q_{85} (cfs)	**12.3**
V_{85} (ac-ft)	**0.48**

Pre-Development Watershed Characteristics:

A =	14.9	acres
L =	0.28	miles
S_e =	12.8	%
H =	187.0	feet
S_i =	10.0	%
D =	30.0	feet
C =	**0.64**	

Note:
The 85th percentile is a 24-hour rainfall total. It represents a value such that 85% of the observed 24-hour rainfall totals will be less than that value.

Pre-Development Watershed Calculations:

T_i =	2.1	minutes
T_t =	4.7	minutes
T_c =	6.8	minutes

	Design Storm Events					
Return (years)	2	5	10	25	50	100
$P_{6\text{-}hr}$ (inches)	1.2	1.6	1.8	2	2.4	2.5
I (in/hr)	2.6	3.5	3.9	4.3	5.2	5.4
Q_p (ac-in/hr)	**24.8**	**33.0**	**37.2**	**41.3**	**49.5**	**51.6**
Q_p (cfs)	**24.6**	**32.8**	**36.9**	**41.0**	**49.2**	**51.2**
V_p (ac-ft)	**1.0**	**1.3**	**1.4**	**1.6**	**1.9**	**2.0**

Quail Brush Site (South Watershed) - Preliminary Pre-Development Watershed Hydrology Analysis:

The watershed characteristics were estimated utilizing GIS, AutoCAD and Civil3D.
The runoff coefficient was conservatively estimated for undeveloped areas utilizing the CALTRANS Highway Design Manual.
The time of concentration was estimated utilizing FAA's Formula & Kirpich's Formula, appropriate for small mountainous basins.
The rainfall intensity was conservatively estimated by procedures outlined in San Diego County/City's Hydrology Manual.
The peak runoff flow rates were computed with the Rational Method per San Diego County/City's Hydrology Manual.

Rainfall Intensity formula: $I = 7.44 * P_{6\text{-}hr} * T_c^{-0.645}$

FAA's formula: $T_i = 1.8 * (1.1 - C) * D^{0.5} * S^{-0.333}$

Kirpich's formula: $T_t = 60 * (11.9\ L^3 / H)^{0.385}$

Where:

$P_{6\text{-}hr}$ = 6-hour precipitation event for a given design storm, inches
T_c = $T_i + T_t$ (time of concentration), minutes
T_i = Initial overland flow time, minutes
C = Runoff coefficient, unitless
D = Initial watercourse distance, feet
S_i = Initial surface slope, %
T_t = Travel time, minutes
L = Watercourse length, miles
S_e = Effective watercourse slope, %
H = Change in elevation along effective slope line, feet

San Diego County/City Hydrology Manual:

Quail Brush Site Rainfall Isopluvials

Return (years)	$P_{6\text{-}hr}$ (inches)	$P_{24\text{-}hr}$ (inches)	P_6/P_{24} (%)
2	1.2	1.8	66.7
5	1.6	2.5	64.0
10	1.8	2.9	62.1
25	2.0	3.7	54.1
50	2.4	4.2	57.1
100	2.5	4.7	53.2

Rational Method: $Q_p = C\ I\ A$ $V_p = C\ P_{6\text{-}hr}\ A$

Where:

Q_p = Peak runoff flow rate, cfs
V_p = Peak runoff volume, ac-ft
C = Runoff coefficient, unitless
I = Rainfall intensity (for duration equal to T_c), in/hr
A = Drainage area, acres

	Water Quality Design Storm Event
P_{85} (inches)	0.6
I (in/hr)	1.2
Q_{85} (ac-in/hr)	**13.5**
Q_{85} (cfs)	**13.4**
V_{85} (ac-ft)	**0.56**

Pre-Development Watershed Characteristics:

A =	17.5	acres
L =	0.30	miles
S_e =	10.3	%
H =	162.6	feet
S_i =	10.0	%
D =	30.0	feet
C =	**0.64**	

Note:
The 85th percentile is a 24-hour rainfall total. It represents a value such that 85% of the observed 24-hour rainfall totals will be less than that value.

Pre-Development Watershed Calculations:

T_i =	2.1	minutes
T_t =	5.4	minutes
T_c =	7.5	minutes

	Design Storm Events					
Return (years)	2	5	10	25	50	100
$P_{6\text{-}hr}$ (inches)	1.2	1.6	1.8	2	2.4	2.5
I (in/hr)	2.4	3.2	3.6	4.0	4.9	5.1
Q_p (ac-in/hr)	**27.1**	**36.1**	**40.6**	**45.2**	**54.2**	**56.5**
Q_p (cfs)	**26.9**	**35.9**	**40.3**	**44.8**	**53.8**	**56.0**
V_p (ac-ft)	**1.1**	**1.5**	**1.7**	**1.9**	**2.2**	**2.3**

Quail Brush Site (North Watershed) - Preliminary Post-Development Watershed Hydrology Analysis (NO CHANGE):

The watershed characteristics were estimated utilizing GIS, AutoCAD and Civil3D.
The runoff coefficient was conservatively estimated for undeveloped areas utilizing the CALTRANS Highway Design Manual.
The time of concentration was estimated utilizing FAA's Formula & Kirpich's Formula, appropriate for small mountainous basins.
The rainfall intensity was conservatively estimated by procedures outlined in San Diego County/City's Hydrology Manual.
The peak runoff flow rates were computed with the Rational Method per San Diego County/City's Hydrology Manual.

Rainfall Intensity formula: $I = 7.44 * P_{6\text{-hr}} * T_c^{-0.645}$

FAA's formula: $T_i = 1.8 * (1.1 - C) * D^{0.5} * S^{-0.333}$

Kirpich's formula: $T_t = 60 * (11.9\ L^3 / H)^{0.385}$

Where:

$P_{6\text{-hr}}$ = 6-hour precipitation event for a given design storm, inches
T_c = $T_i + T_t$ (time of concentration), minutes
T_i = Initial overland flow time, minutes
C = Runoff coefficient, unitless
D = Initial watercourse distance, feet
S_i = Initial surface slope, %
T_t = Travel time, minutes
L = Watercourse length, miles
S_e = Effective watercourse slope, %
H = Change in elevation along effective slope line, feet

San Diego County/City Hydrology Manual:

Quail Brush Site Rainfall Isopluvials

Return (years)	$P_{6\text{-hr}}$ (inches)	$P_{24\text{-hr}}$ (inches)	P_6/P_{24} (%)
2	1.2	1.8	66.7
5	1.6	2.5	64.0
10	1.8	2.9	62.1
25	2.0	3.7	54.1
50	2.4	4.2	57.1
100	2.5	4.7	53.2

Rational Method: $Q_p = C\ I\ A$ $V_p = C\ P_{6\text{-hr}}\ A$

Where:

Q_p = Peak runoff flow rate, cfs
V_p = Peak runoff volume, ac-ft
C = Runoff coefficient, unitless
I = Rainfall intensity (for duration equal to T_c), in/hr
A = Drainage area, acres

	Water Quality Design Storm Event
P_{85} (inches)	0.6
I (in/hr)	1.2
Q_{85} (ac-in/hr)	**12.6**
Q_{85} (cfs)	**12.5**
V_{85} (ac-ft)	**0.51**

Post-Development Watershed Characteristics:

A =	15.9	acres
L =	0.29	miles
S_e =	13.7	%
H =	206.4	feet
S_i =	5.0	%
D =	30.0	feet
C =	**0.64**	

Note:
The 85th percentile is a 24-hour rainfall total. It represents a value such that 85% of the observed 24-hour rainfall totals will be less than that value.

Post-Development Watershed Calculations:

T_i =	2.7	minutes
T_t =	4.7	minutes
T_c =	7.4	minutes

	Design Storm Events					
Return (years)	2	5	10	25	50	100
$P_{6\text{-hr}}$ (inches)	1.2	1.6	1.8	2.0	2.4	2.5
I (in/hr)	2.5	3.3	3.7	4.1	4.9	5.1
Q_p (ac-in/hr)	**25.2**	**33.5**	**37.7**	**41.9**	**50.3**	**52.4**
Q_p (cfs)	**25.0**	**33.3**	**37.4**	**41.6**	**49.9**	**52.0**
V_p (ac-ft)	**1.0**	**1.4**	**1.5**	**1.7**	**2.0**	**2.1**

Quail Brush Site (Central Watershed) - Preliminary Post-Development Watershed Hydrology Analysis:

The watershed characteristics were estimated utilizing GIS, AutoCAD and Civil3D.
The runoff coefficient for undeveloped areas was conservatively estimated utilizing the CALTRANS Highway Design Manual.
The runoff coefficients for developed areas were conservatively estimated from Hydrologic Analysis and Design, McCuen 1998.
The time of concentration was estimated utilizing FAA's Formula, Ave. Velocity & Kirpich's Formula for small mountainous basins.
The rainfall intensity was conservatively estimated by procedures outlined in San Diego County/City's Hydrology Manual.
The peak runoff flow rates were computed with the Rational Method per San Diego County/City's Hydrology Manual.

Rainfall Intensity formula: $I = 7.44 * P_{6\text{-}hr} * T_c^{-0.645}$

FAA's formula: $T_i = 1.8 * (1.1 - C) * D^{0.5} * S^{-0.333}$

Kirpich's formula: $T_t = 60 * (11.9\ L^3 / H)^{0.385}$

Average Velocity formula: $T_t = 60 * L / V$

Where:

$P_{6\text{-}hr}$ = 6-hour precipitation event for a given design storm, inches
T_c = $T_i + T_t$ (time of concentration), minutes
T_i = Initial overland flow time, minutes
C = Runoff coefficient, unitless
D = Initial watercourse distance, feet
S_i = Initial surface slope, %
T_t = Travel time, minutes
L = Watercourse length, miles or feet
S_e = Effective watercourse slope, %
H = Change in elevation along effective slope line, feet
V = Assumed average velocity for channel flow, feet per second

San Diego County/City Hydrology Manual:
Quail Brush Site Rainfall Isopluvials

Return (years)	$P_{6\text{-}hr}$ (inches)	$P_{24\text{-}hr}$ (inches)	P_6/P_{24} (%)
2	1.2	1.8	66.7
5	1.6	2.5	64.0
10	1.8	2.9	62.1
25	2.0	3.7	54.1
50	2.4	4.2	57.1
100	2.5	4.7	53.2

Rational Method: $Q_p = C\ I\ A$ $V_p = C\ P_{6\text{-}hr}\ A$

Where:

Q_p = Peak runoff flow rate, cfs
V_p = Peak runoff volume, ac-ft
C = Weighted Runoff coefficient, unitless
I = Rainfall intensity (for duration equal to T_c), in/hr
A = Drainage area, acres

Post-Development Watershed Characteristics:

A_1 =	6.8	acres (developed areas associated with plant)
A_2 =	7.4	acres (undeveloped upgradient/downgradient of plant)
L_1 =	0.10	miles (undeveloped natural watercourse)
L_2 =	990	feet (developed channel watercourse)
V =	5.0	ft/s
S_e =	28.6	%
H =	145.7	feet
S_i =	10.0	%
D =	30.0	feet
C_1 =	**0.62**	**(developed area weighted average)**
C_2 =	**0.64**	**(undeveloped)**
Weighted C =	**0.63**	

	Water Quality Design Storm Event
P_{85} (inches)	0.6
I (in/hr)	1.3
Q_{85} (ac-in/hr)	**11.5**
Q_{85} (cfs)	**11.4**
V_{85} (ac-ft)	**0.45**

Note:
The 85th percentile is a 24-hour rainfall total.
It represents a value such that 85% of the observed 24-hour rainfall totals will be less than that value.

Post-Development Watershed Calculations:

T_i =	2.1	minutes
T_{t1} =	1.5	minutes
T_{t2} =	3.3	minutes
T_c =	6.9	minutes

	Design Storm Events					
Return (years)	2	5	10	25	50	100
$P_{6\text{-}hr}$ (inches)	1.2	1.6	1.8	2.0	2.4	2.5
I (in/hr)	2.6	3.4	3.8	4.3	5.1	5.3
Q_p (ac-in/hr)	**22.9**	**30.6**	**34.4**	**38.2**	**45.9**	**47.8**
Q_p (cfs)	**22.8**	**30.3**	**34.1**	**37.9**	**45.5**	**47.4**
V_p (ac-ft)	**0.9**	**1.2**	**1.3**	**1.5**	**1.8**	**1.9**

Quail Brush Site (South Watershed) - Preliminary Post-Development Watershed Hydrology Analysis:

The watershed characteristics were estimated utilizing GIS, AutoCAD and Civil3D.
The runoff coefficient for undeveloped areas was conservatively estimated utilizing the CALTRANS Highway Design Manual.
The runoff coefficients for developed areas were conservatively estimated from Hydrologic Analysis and Design, McCuen 1998.
The time of concentration was estimated utilizing FAA's Formula & Kirpich's Formula, appropriate for small mountainous basins.
The rainfall intensity was conservatively estimated by procedures outlined in San Diego County/City's Hydrology Manual.
The peak runoff flow rates were computed with the Rational Method per San Diego County/City's Hydrology Manual.

Rainfall Intensity formula: $I = 7.44 * P_{6\text{-hr}} * T_c^{-0.645}$

FAA's formula: $T_i = 1.8 * (1.1 - C) * D^{0.5} * S^{-0.333}$

Kirpich's formula: $T_t = 60 * (11.9\ L^3 / H)^{0.385}$

Where:

$P_{6\text{-hr}}$ = 6-hour precipitation event for a given design storm, inches
$T_c = T_i + T_t$ (time of concentration), minutes
T_i = Initial overland flow time, minutes
C = Runoff coefficient, unitless
D = Initial watercourse distance, feet
S_i = Initial surface slope, %
T_t = Travel time, minutes
L = Watercourse length, miles
S_e = Effective watercourse slope, %
H = Change in elevation along effective slope line, feet

San Diego County/City Hydrology Manual:
Quail Brush Site Rainfall Isopluvials

Return (years)	$P_{6\text{-hr}}$ (inches)	$P_{24\text{-hr}}$ (inches)	P_6/P_{24} (%)
2	1.2	1.8	66.7
5	1.6	2.5	64.0
10	1.8	2.9	62.1
25	2.0	3.7	54.1
50	2.4	4.2	57.1
100	2.5	4.7	53.2

Rational Method: $Q_p = C\ I\ A$ $V_p = C\ P_{6\text{-hr}}\ A$

Where:

Q_p = Peak runoff flow rate, cfs
V_p = Peak runoff volume, ac-ft
C = Weighted Runoff coefficient, unitless
I = Rainfall intensity (for duration equal to T_c), in/hr
A = Drainage area, acres

	Water Quality Design Storm Event
P_{85} (inches)	0.6
I (in/hr)	1.2
Q_{85} (ac-in/hr)	**14.1**
Q_{85} (cfs)	**14.0**
V_{85} (ac-ft)	**0.58**

Post-Development Watershed Characteristics:

A_1 =	3.4	acres (developed areas associated with plant)
A_2 =	14.8	acres (undeveloped upgradient/downgradient of plant)
L =	0.30	miles
S_e =	10.3	%
H =	162.6	feet
S_i =	10.0	%
D =	30.0	feet
C_1 =	**0.62**	**(developed area weighted average)**
C_2 =	**0.64**	**(undeveloped)**
Weighted C =	**0.64**	

Note:
The 85th percentile is a 24-hour rainfall total. It represents a value such that 85% of the observed 24-hour rainfall totals will be less than that value.

Post-Development Watershed Calculations:

T_i =	2.1	minutes
T_t =	5.4	minutes
T_c =	7.5	minutes

	Design Storm Events					
Return (years)	2	5	10	25	50	100
$P_{6\text{-hr}}$ (inches)	1.2	1.6	1.8	2.0	2.4	2.5
I (in/hr)	2.4	3.2	3.6	4.0	4.9	5.1
Q_p (ac-in/hr)	**28.1**	**37.5**	**42.2**	**46.9**	**56.3**	**58.6**
Q_p (cfs)	**27.9**	**37.2**	**41.9**	**46.5**	**55.8**	**58.2**
V_p (ac-ft)	**1.2**	**1.5**	**1.7**	**1.9**	**2.3**	**2.4**

TETRA TECH EC,INC

		CLIENT:	Cogentrix	MADE BY:	GPH/CEB	DATE:	9/20/2012
JOB TITLE:	Quail Brush Generation Project			CHECKED:	SO	JOB # :	106-4346
SUBJECT:	Prelim. Watershed Hydrology Analysis - Rational Method			APPROVED:	WLS	SHEET:	1 of 1

Quail Brush Site - Preliminary Post-Development Subarea Watershed Hydrology Analysis (Main Areas Only):

The watershed characteristics were estimated utilizing GIS, AutoCAD and Civil3D.
The runoff coefficient for undeveloped areas was conservatively estimated utilizing the CALTRANS Highway Design Manual.
The runoff coefficients for developed areas were conservatively estimated from Hydrologic Analysis and Design, McCuen 1998.
The time of concentration was estimated utilizing FAA's Formula, Ave. Velocity & Kirpich's Formula for small mountainous basins.
The rainfall intensity was conservatively estimated by procedures outlined in San Diego County/City's Hydrology Manual.
The peak runoff flow rates were computed with the Rational Method per San Diego County/City's Hydrology Manual.

Subarea	**Area Description**	A (ft^2)	A (ac)	C	A*C	T_c (min)	R (yrs)	$P_{6\text{-}hr}$ (in)	I (in/hr)	**Q_p (ac-in/hr)**	**Q_p (cfs)**	**V_p (ac-ft)**
C01	Undeveloped Drainage Basin	186,762	4.29	0.64	2.74	5.0	100	2.5	6.59	18.1	17.9	0.57
C02	Landscaped Slope/Retaining Walls	11,900	0.27	0.44	0.12	5.0	100	2.5	6.59	0.8	0.8	0.03
C03	Developed SDGE Switch Yard	57,550	1.32	0.69	0.91	5.0	100	2.5	6.59	6.0	5.9	0.19
C04	Landscaped/Drainage Area	10,787	0.25	0.44	0.11	5.0	100	2.5	6.59	0.7	0.7	0.02
C05	Developed Plant Site - Northeast	48,949	1.12	0.70	0.78	5.0	100	2.5	6.59	5.2	5.1	0.16
C06	Developed Plant Site - Northwest	55,271	1.27	0.64	0.81	5.0	100	2.5	6.59	5.3	5.3	0.17
C07	Developed Plant Switch Yard	13,365	0.31	0.75	0.23	5.0	100	2.5	6.59	1.5	1.5	0.05
C08	Landscaped/Walls/Pond/Drainage	32,231	0.74	0.44	0.33	5.0	100	2.5	6.59	2.1	2.1	0.07
C09	Developed Plant Site - Main Buildings	29,583	0.68	0.85	0.58	5.0	100	2.5	6.59	3.8	3.8	0.12
C10	Landscaped Slope/Retaining Walls	15,948	0.37	0.44	0.16	5.0	100	2.5	6.59	1.1	1.1	0.03
C11	Landscaped Slope/Retaining Walls	22,032	0.51	0.44	0.22	5.0	100	2.5	6.59	1.5	1.5	0.05
C12	Undeveloped Drainage Basin	105,697	2.43	0.64	1.55	5.0	100	2.5	6.59	10.2	10.1	0.32
C13	Undeveloped Drainage Basin	28,330	0.65	0.64	0.42	5.0	100	2.5	6.59	2.7	2.7	0.09
Total	**Central Watershed**	**618,405**	**14.2**	**0.63**	**8.96**	**6.9**	**100**	**2.5**	**5.33**	**47.8**	**47.4**	**1.87**

Node	**Area Description**	A (ft^2)	A (ac)	C	A*C	T_c (min)	R (yrs)	$P_{6\text{-}hr}$ (in)	I (in/hr)	**Q_p (ac-in/hr)**	**Q_p (cfs)**	**V_p (ac-ft)**
C01-C04	Subareas C01-C04 Confluence	267,000	6.13	0.63	3.88	5.0	100	2.5	6.59	25.6	25.4	0.81
C05-C06	Subareas C05-C06 Confluence	104,220	2.39	0.67	1.59	5.0	100	2.5	6.59	10.5	10.4	0.33
C08(C05-06)	Subareas C05-C06, C08 Confluence	136,451	3.13	0.61	1.92	5.0	100	2.5	6.59	12.6	12.5	0.40
C01-C08	Subareas C01-C08 Confluence	416,816	9.57	0.63	6.03	5.0	100	2.5	6.59	39.7	39.4	1.26
C01-C16	**Central Watershed Outlet**	**618,405**	**14.2**	**0.63**	**8.96**	**6.9**	**100**	**2.5**	**5.33**	**47.8**	**47.4**	**1.87**

Subarea	**Area Description**	A (ft^2)	A (ac)	C	A*C	T_c (min)	R (yrs)	$P_{6\text{-}hr}$ (in)	I (in/hr)	**Q_p (ac-in/hr)**	**Q_p (cfs)**	**V_p (ac-ft)**
S01	Undeveloped Drainage Basin	524,779	12.05	0.64	7.71	7.5	100	2.5	5.06	39.0	38.7	1.61
S02	Landscaped Slope/Retaining Walls	14,455	0.33	0.44	0.15	5.0	100	2.5	6.59	1.0	1.0	0.03
S03	Access Road/Retaining Walls	22,417	0.51	0.64	0.33	5.0	100	2.5	6.59	2.2	2.2	0.07
S04	Developed Plant Site - South	44,134	1.01	0.76	0.77	5.0	100	2.5	6.59	5.1	5.1	0.16
S05	Landscaped Area/Retaining Walls	8,774	0.20	0.44	0.09	5.0	100	2.5	6.59	0.6	0.6	0.02
S06	Access Road/Retaining Walls	17,639	0.40	0.64	0.26	5.0	100	2.5	6.59	1.7	1.7	0.05
S07	Access Road/Retaining Walls/Pond	32,798	0.75	0.55	0.41	5.0	100	2.5	6.59	2.7	2.7	0.09
S08	Access Road/Retaining Walls	7,083	0.16	0.63	0.10	5.0	100	2.5	6.59	0.7	0.7	0.02
S09	Undeveloped Drainage Basin	120,937	2.78	0.64	1.78	5.0	100	2.5	6.59	11.7	11.6	0.37
Total	**South Watershed**	**793,017**	**18.2**	**0.64**	**11.60**	**7.5**	**100**	**2.5**	**5.06**	**58.6**	**58.2**	**2.42**

Node	**Area Description**	A (ft^2)	A (ac)	C	A*C	T_c (min)	R (yrs)	$P_{6\text{-}hr}$ (in)	I (in/hr)	**Q_p (ac-in/hr)**	**Q_p (cfs)**	**V_p (ac-ft)**
S02-S03	Subareas S02-S03 Confluence	36,872	0.85	0.56	0.48	5.0	100	2.5	6.59	3.1	3.1	0.10
S04-S05	Subareas S04-S05 Confluence	52,907	1.21	0.71	0.86	5.0	100	2.5	6.59	5.7	5.6	0.18
S06(S04-05)	Subareas S04-S05, S06 Confluence	70,547	1.62	0.69	1.12	5.0	100	2.5	6.59	7.4	7.3	0.23
S07(S02-03)	Subareas S02-S03, S07 Confluence	69,671	1.60	0.56	0.89	5.0	100	2.5	6.59	5.9	5.8	0.19
S02-S07	Subareas S02-S07 Confluence	140,218	3.22	0.62	2.01	5.0	100	2.5	6.59	13.2	13.1	0.42
S08-S09	Subareas S08-S09 Confluence	128,020	2.94	0.64	1.88	5.0	100	2.5	6.59	12.4	12.3	0.39
S01-S09	**South Watershed Outlet**	**793,017**	**18.2**	**0.64**	**11.60**	**7.5**	**100**	**2.5**	**5.06**	**58.6**	**58.2**	**2.42**

TETRA TECH EC,INC

		CLIENT:	Cogentrix	MADE BY:	GPH/CEB	DATE:	9/20/2012
JOB TITLE:	Quail Brush Generation Project			CHECKED:	SO	JOB # :	106-4346
SUBJECT:	Prelim. Watershed Hydrology Analysis - Rational Method			APPROVED:	WLS	SHEET:	1 of 1

Quail Brush Site - Preliminary Post-Development Subarea Watershed Hydrology Analysis (All Areas):

The watershed characteristics were estimated utilizing GIS, AutoCAD and Civil3D.
The runoff coefficient for undeveloped areas was conservatively estimated utilizing the CALTRANS Highway Design Manual.
The runoff coefficients for developed areas were conservatively estimated from Hydrologic Analysis and Design, McCuen 1998.
The time of concentration was estimated utilizing FAA's Formula, Ave. Velocity & Kirpich's Formula for small mountainous basins.
The rainfall intensity was conservatively estimated by procedures outlined in San Diego County/City's Hydrology Manual.
The peak runoff flow rates were computed with the Rational Method per San Diego County/City's Hydrology Manual.

Subarea	**Area Description**	A (ft^2)	*a (ft^2)*	A (ac)	*a (ac)*	C	A*C	T_c (min)	R (yrs)	$P_{6\text{-}hr}$ (in)	I (in/hr)	**Q_p (ac-in/hr)**	**Q_p (cfs)**	**V_p (ac-ft)**
C01	Undeveloped Drainage Basin	186,762		4.29		0.64	2.74	5.0	100	2.5	6.59	18.1	17.9	0.57
C02	Landscaped Slope/Retaining Walls	11,900		0.27		0.44	0.12	5.0	100	2.5	6.59	0.8	0.8	0.03
C03	Developed SDGE Switch Yard	57,550		1.32		0.69	0.91	5.0	100	2.5	6.59	6.0	5.9	0.19
C03-A	*Developed SDGE- Pavement*		*10,691*		*0.25*	0.85								
C03-B	*Developed SDGE- Gravel*		*30,312*		*0.70*	0.75								
C03-C	*Developed SDGE- Landscaped*		*15,401*		*0.35*	0.44								
C03-D	*Developed SDGE - Building*		*1,146*		*0.03*	0.85								
C04	Landscaped/Drainage Area	10,787		0.25		0.44	0.11	5.0	100	2.5	6.59	0.7	0.7	0.02
C05	Developed Plant Site - Northeast	48,949		1.12		0.70	0.78	5.0	100	2.5	6.59	5.2	5.1	0.16
C05-A	*Developed Plant - Pavement*		*10,020*		*0.23*	0.85								
C05-B	*Developed Plant - Gravel*		*18,334*		*0.42*	0.75								
C05-C	*Developed Plant - Landscaped*		*5,878*		*0.13*	0.44								
C05-D	*Developed Plant - Miscellaneous*		*10,988*		*0.25*	0.85								
C05-E	*Developed Plant - Contained*		*3,729*		*0.09*	0.00								
C06	Developed Plant Site - Northwest	55,271		1.27		0.64	0.81	5.0	100	2.5	6.59	5.3	5.3	0.17
C06-A	*Developed Plant - Pavement*		*11,300*		*0.26*	0.85								
C06-B	*Developed Plant - Gravel*		*20,795*		*0.48*	0.75								
C06-C	*Developed Plant - Landscaped*		*4,772*		*0.11*	0.44								
C06-D	*Developed Plant - Miscellaneous*		*9,338*		*0.21*	0.85								
C06-E	*Developed Plant - Contained*		*9,066*		*0.21*	0.00								
C07	Developed Plant Switch Yard	13,365		0.31		0.75	0.23	5.0	100	2.5	6.59	1.5	1.5	0.05
C07-A	*Developed Plant - Pavement*		*392*		*0.01*	0.85								
C07-B	*Developed Plant - Gravel*		*12,806*		*0.29*	0.75								
C07-C	*Developed Plant - Building*		*167*		*0.00*	0.85								
C08	Landscaped/Walls/Pond/Drainage	32,231		0.74		0.44	0.33	5.0	100	2.5	6.59	2.1	2.1	0.07
C08-A	*Landscaped Slope/Walls/Pond*		*22,476*		*0.52*	0.44								
C08-B	*Landscaped Slope/Drainage*		*9,755*		*0.22*	0.44								
C09	Developed Plant Site - Main Buildings	29,583		0.68		0.85	0.58	5.0	100	2.5	6.59	3.8	3.8	0.12
C10	Landscaped Slope/Retaining Walls	15,948		0.37		0.44	0.16	5.0	100	2.5	6.59	1.1	1.1	0.03
C11	Landscaped Slope/Retaining Walls	22,032		0.51		0.44	0.22	5.0	100	2.5	6.59	1.5	1.5	0.05
C12	Undeveloped Drainage Basin	105,697		2.43		0.64	1.55	5.0	100	2.5	6.59	10.2	10.1	0.32
C13	Undeveloped Drainage Basin	28,330		0.65		0.64	0.42	5.0	100	2.5	6.59	2.7	2.7	0.09
Total	**Central Watershed**	**618,405**		**14.2**		**0.63**	**8.96**	**6.9**	**100**	**2.5**	**5.33**	**47.8**	**47.4**	**1.87**

Node	**Area Description**	A (ft^2)	A (ac)	C	A*C	T_c (min)	R (yrs)	$P_{6\text{-}hr}$ (in)	I (in/hr)	**Q_p (ac-in/hr)**	**Q_p (cfs)**	**V_p (ac-ft)**
C01-C04	Subareas C01-C04 Confluence	267,000	6.13	0.63	3.88	5.0	100	2.5	6.59	25.6	25.4	0.81
C05-C06	Subareas C05-C06 Confluence	104,220	2.39	0.67	1.59	5.0	100	2.5	6.59	10.5	10.4	0.33
C08(C05-06)	Subareas C05-C06, C08 Confluence	136,451	3.13	0.61	1.92	5.0	100	2.5	6.59	12.6	12.5	0.40
C01-C08	Subareas C01-C08 Confluence	416,816	9.57	0.63	6.03	5.0	100	2.5	6.59	39.7	39.4	1.26
C01-C16	**Central Watershed Outlet**	**618,405**	**14.2**	**0.63**	**8.96**	**6.9**	**100**	**2.5**	**5.33**	**47.8**	**47.4**	**1.87**

Subarea	**Area Description**	A (ft^2)	*a (ft^2)*	A (ac)	*a (ac)*	C	A*C	T_c (min)	R (yrs)	$P_{6\text{-}hr}$ (in)	I (in/hr)	**Q_p (ac-in/hr)**	**Q_p (cfs)**	**V_p (ac-ft)**
S01	Undeveloped Drainage Basin	524,779		12.05		0.64	7.71	7.5	100	2.5	5.06	39.0	38.7	1.61
S02	Landscaped Slope/Retaining Walls	14,455		0.33		0.44	0.15	5.0	100	2.5	6.59	1.0	1.0	0.03
S03	Access Road/Retaining Walls	22,417		0.51		0.64	0.33	5.0	100	2.5	6.59	2.2	2.2	0.07
S03-A	*Access Road Pavement*		*11,202*		*0.26*	0.85								
S03-B	*Landscaped Slope/Retaining Walls*		*11,215*		*0.26*	0.44								
S04	Developed Plant Site - South	44,134		1.01		0.76	0.77	5.0	100	2.5	6.59	5.1	5.1	0.16
S04-A	*Developed Plant - Pavement*		*20,079*		*0.46*	*0.85*								
S04-B	*Developed Plant - Gravel*		*10,442*		*0.24*	*0.75*								
S04-C	*Developed Plant - Landscaped*		*6,832*		*0.16*	0.44								
S04-D	*Developed Plant - Miscellaneous*		*6,780*		*0.16*	*0.85*								
S05	Landscaped Area/Retaining Walls	8,774		0.20		0.44	0.09	5.0	100	2.5	6.59	0.6	0.6	0.02
S06	Access Road/Retaining Walls	17,639		0.40		0.64	0.26	5.0	100	2.5	6.59	1.7	1.7	0.05
S06-A	*Access Road Pavement*		*8,408*		*0.19*	0.85		5.0	100	2.5	6.59	0.0	0.0	0.00
S06-B	*Landscaped Slope/Retaining Walls*		*9,232*		*0.21*	0.44		5.0	100	2.5	6.59	0.0	0.0	0.00
S07	Access Road/Retaining Walls/Pond	32,798		0.75		0.55	0.41	5.0	100	2.5	6.59	2.7	2.7	0.09
S07-A	*Access Road Pavement*		*8,474*		*0.19*	0.85								
S07-B	*Landscaped Slope/Retaining Walls*		*24,325*		*0.56*	0.44								
S08	Access Road/Retaining Walls	7,083		0.16		0.63	0.10	5.0	100	2.5	6.59	0.7	0.7	0.02
S08-A	*Access Road Pavement*		*3,270*		*0.08*	*0.85*								
S08-B	*Landscaped Slope/Retaining Walls*		*3,813*		*0.09*	0.44								
S09	Undeveloped Drainage Basin	120,937		2.78		0.64	1.78	5.0	100	2.5	6.59	11.7	11.6	0.37
Total	**South Watershed**	**793,017**		**18.2**		**0.64**	**11.60**	**7.5**	**100**	**2.5**	**5.06**	**58.6**	**58.2**	**2.42**

Node	**Area Description**	A (ft^2)	A (ac)	C	A*C	T_c (min)	R (yrs)	$P_{6\text{-}hr}$ (in)	I (in/hr)	**Q_p (ac-in/hr)**	**Q_p (cfs)**	**V_p (ac-ft)**
S02-S03	Subareas S02-S03 Confluence	36,872	0.85	0.56	0.48	5.0	100	2.5	6.59	3.1	3.1	0.10
S04-S05	Subareas S04-S05 Confluence	52,907	1.21	0.71	0.86	5.0	100	2.5	6.59	5.7	5.6	0.18
S06(S04-05)	Subareas S04-S05, S06 Confluence	70,547	1.62	0.69	1.12	5.0	100	2.5	6.59	7.4	7.3	0.23
S07(S02-03)	Subareas S02-S03, S07 Confluence	69,671	1.60	0.56	0.89	5.0	100	2.5	6.59	5.9	5.8	0.19
S02-S07	Subareas S02-S07 Confluence	140,218	3.22	0.62	2.01	5.0	100	2.5	6.59	13.2	13.1	0.42
S08-S09	Subareas S08-S09 Confluence	128,020	2.94	0.64	1.88	5.0	100	2.5	6.59	12.4	12.3	0.39
S01-S09	**South Watershed Outlet**	**793,017**	**18.2**	**0.64**	**11.60**	**7.5**	**100**	**2.5**	**5.06**	**58.6**	**58.2**	**2.42**

TETRA TECH EC,INC

	CLIENT: Cogentrix	MADE BY:	GPH/CEB	DATE:	9/20/2012
JOB TITLE:	Quail Brush Generation Project	CHECKED:	SO	JOB # :	106-4346
SUBJECT:	Prelim. Watershed Hydrology Analysis - **Rational Method**	APPROVED:	WLS	SHEET:	Summary

Quail Brush Site - Summary of Preliminary Watershed Hydrology Analysis: DISTURBED AREAS ONLY

Note ***- This analysis is intended as a planning exercise in order to compare the effects from the project development to existing conditions, particularly the associated changes for the runoff coefficient and the time of concentration relative to the rainfall intensity, for only the disturbed footprint areas without regard to the remainder of the respective watershed comprising undeveloped areas. This exercise considers only these disturbed areas as either superimposed over the existing undeveloped steep terrain or as developed project areas, and also assumes isolation of these disturbed areas and diversion of all other adjacent undeveloped areas.***

The conclusion that can be drawn from this exercise is that the runoff coefficient is reduced due to the anticipated project land use and the rainfall intensity is decreased as a result of the time of concentration being increased due to the project development and the resulting implementation of the Hydromodification Plan features. Therefore and in consideration of only the disturbed project areas, the proposed flow rates are decreased when compared to the flow rates that would be generated from the same area footprint draped over the steep existing terrain.

	Pre-Development Peak Runoff Design Flow Rates (cfs)						
Watershed Area	Q_{85}	Q_{p-2}	Q_{p-5}	Q_{p-10}	Q_{p-25}	Q_{p-50}	Q_{p-100}
Central Watershed	**6.3**	**12.6**	**16.7**	**18.8**	**20.9**	**25.1**	**26.1**
South Watershed	**3.0**	**5.9**	**7.9**	**8.8**	**9.8**	**11.8**	**12.3**

	Pre-Development Peak Runoff Design Volumes (ac-ft)						
Watershed Area	V_{85}	V_{p-2}	V_{p-5}	V_{p-10}	V_{p-25}	V_{p-50}	V_{p-100}
Central Watershed	**0.22**	**0.44**	**0.58**	**0.66**	**0.73**	**0.87**	**0.91**
South Watershed	**0.11**	**0.22**	**0.29**	**0.32**	**0.36**	**0.43**	**0.45**

	Post-Development Peak Runoff Design Flow Rates (cfs)						
Watershed Area	Q_{85}	Q_{p-2}	Q_{p-5}	Q_{p-10}	Q_{p-25}	Q_{p-50}	Q_{p-100}
Central Watershed	**4.9**	**9.7**	**13.0**	**14.6**	**16.2**	**19.5**	**20.3**
South Watershed	**2.2**	**4.3**	**5.7**	**6.5**	**7.2**	**8.6**	**9.0**

	Post-Development Peak Runoff Design Volumes (ac-ft)						
Watershed Area	V_{85}	V_{p-2}	V_{p-5}	V_{p-10}	V_{p-25}	V_{p-50}	V_{p-100}
Central Watershed	**0.21**	**0.42**	**0.57**	**0.64**	**0.71**	**0.85**	**0.89**
South Watershed	**0.11**	**0.21**	**0.28**	**0.32**	**0.35**	**0.42**	**0.44**

TETRA TECH EC,INC

	CLIENT: Cogentrix	MADE BY:	GPH/CEB	DATE:	9/20/2012
JOB TITLE:	Quail Brush Generation Project	CHECKED:	SO	JOB # :	106-4346
SUBJECT:	Prelim. Watershed Hydrology Analysis - Rational Method	APPROVED:	WLS	SHEET:	1 of 4

Quail Brush Site (Central Watershed) - Preliminary Pre-Development Watershed Hydrology Analysis (Disturbed Areas Only):

Note - This analysis is intended as a planning exercise in order to compare the effects from the project development to existing conditions, particularly the associated changes for the runoff coefficient and the time of concentration relative to the rainfall intensity, for only the disturbed footprint areas without regard to the remainder of the respective watershed comprising undeveloped areas. This exercise considers only these disturbed areas as superimposed over the existing undeveloped steep terrain and also assumes isolation of these disturbed areas and diversion of all other adjacent undeveloped areas.

The watershed characteristics were estimated utilizing GIS, AutoCAD and Civil3D.
The runoff coefficient was conservatively estimated for undeveloped areas utilizing the CALTRANS Highway Design Manual.
The time of concentration was estimated utilizing FAA's Formula & Kirpich's Formula, appropriate for small mountainous basins.
The rainfall intensity was conservatively estimated by procedures outlined in San Diego County/City's Hydrology Manual.
The peak runoff flow rates were computed with the Rational Method per San Diego County/City's Hydrology Manual.

Rainfall Intensity formula: $I = 7.44 * P_{6\text{-hr}} * T_c^{-0.645}$

FAA's formula: $T_i = 1.8 * (1.1 - C) * D^{0.5} * S^{-0.333}$

Kirpich's formula: $T_t = 60 * (11.9\ L^3 / H)^{0.385}$

Where:

$P_{6\text{-hr}}$ = 6-hour precipitation event for a given design storm, inches
$T_c = T_i + T_t$ (time of concentration), minutes
T_i = Initial overland flow time, minutes
C = Runoff coefficient, unitless
D = Initial watercourse distance, feet
S_i = Initial surface slope, %
T_t = Travel time, minutes
L = Watercourse length, miles
S_e = Effective watercourse slope, %
H = Change in elevation along effective slope line, feet

San Diego County/City Hydrology Manual:

Quail Brush Site Rainfall Isopluvials

Return (years)	$P_{6\text{-hr}}$ (inches)	$P_{24\text{-hr}}$ (inches)	P_6/P_{24} (%)
2	1.2	1.8	66.7
5	1.6	2.5	64.0
10	1.8	2.9	62.1
25	2.0	3.7	54.1
50	2.4	4.2	57.1
100	2.5	4.7	53.2

Rational Method: $Q_p = C\ I\ A$ $V_p = C\ P_{6\text{-hr}}\ A$

Where:

Q_p = Peak runoff flow rate, cfs
V_p = Peak runoff volume, ac-ft
C = Runoff coefficient, unitless
I = Rainfall intensity (for duration equal to T_c), in/hr
A = Drainage area, acres

	Water Quality Design Storm Event
P_{85} (inches)	0.6
I (in/hr)	1.4
Q_{85} (ac-in/hr)	**6.3**
Q_{85} (cfs)	**6.3**
V_{85} (ac-ft)	**0.22**

Pre-Development Watershed Characteristics:

A =	6.8	acres (areas associated only w/ developed plant)
L =	0.18	miles
S_e =	11.1	%
H =	108.0	feet
S_i =	10.0	%
D =	30.0	feet
C =	**0.64**	

Note:
The 85th percentile is a 24-hour rainfall total. It represents a value such that 85% of the observed 24-hour rainfall totals will be less than that value.

Pre-Development Watershed Calculations:

T_i =	2.1	minutes
T_t =	3.6	minutes
T_c =	5.7	minutes

	Design Storm Events					
Return (years)	2	5	10	25	50	100
$P_{6\text{-hr}}$ (inches)	1.2	1.6	1.8	2	2.4	2.5
I (in/hr)	2.9	3.9	4.3	4.8	5.8	6.0
Q_p (ac-in/hr)	**12.6**	**16.9**	**19.0**	**21.1**	**25.3**	**26.3**
Q_p (cfs)	**12.6**	**16.7**	**18.8**	**20.9**	**25.1**	**26.1**
V_p (ac-ft)	**0.44**	**0.58**	**0.66**	**0.73**	**0.87**	**0.91**

Quail Brush Site (South Watershed) - Preliminary Pre-Development Watershed Hydrology Analysis (Disturbed Areas Only):

Note - This analysis is intended as a planning exercise in order to compare the effects from the project development to existing conditions, particularly the associated changes for the runoff coefficient and the time of concentration relative to the rainfall intensity, for only the disturbed footprint areas without regard to the remainder of the respective watershed comprising undeveloped areas. This exercise considers only these disturbed areas as superimposed over the existing undeveloped steep terrain and also assumes isolation of these disturbed areas and diversion of all other adjacent undeveloped areas.

The watershed characteristics were estimated utilizing GIS, AutoCAD and Civil3D.
The runoff coefficient was conservatively estimated for undeveloped areas utilizing the CALTRANS Highway Design Manual.
The time of concentration was estimated utilizing FAA's Formula & Kirpich's Formula, appropriate for small mountainous basins.
The rainfall intensity was conservatively estimated by procedures outlined in San Diego County/City's Hydrology Manual.
The peak runoff flow rates were computed with the Rational Method per San Diego County/City's Hydrology Manual.

Rainfall Intensity formula: $I = 7.44 * P_{6\text{-hr}} * T_c^{-0.645}$

FAA's formula: $T_i = 1.8 * (1.1 - C) * D^{0.5} * S^{-0.333}$

Kirpich's formula: $T_t = 60 * (11.9\ L^3 / H)^{0.385}$

Where:

$P_{6\text{-hr}}$ = 6-hour precipitation event for a given design storm, inches
$T_c = T_i + T_t$ (time of concentration), minutes
T_i = Initial overland flow time, minutes
C = Runoff coefficient, unitless
D = Initial watercourse distance, feet
S_i = Initial surface slope, %
T_t = Travel time, minutes
L = Watercourse length, miles
S_e = Effective watercourse slope, %
H = Change in elevation along effective slope line, feet

San Diego County/City Hydrology Manual:
Quail Brush Site Rainfall Isopluvials

Return (years)	$P_{6\text{-hr}}$ (inches)	$P_{24\text{-hr}}$ (inches)	P_6/P_{24} (%)
2	1.2	1.8	66.7
5	1.6	2.5	64.0
10	1.8	2.9	62.1
25	2.0	3.7	54.1
50	2.4	4.2	57.1
100	2.5	4.7	53.2

Rational Method: $Q_p = C\ I\ A$ $V_p = C\ P_{6\text{-hr}}\ A$

Where:

Q_p = Peak runoff flow rate, cfs
V_p = Peak runoff volume, ac-ft
C = Runoff coefficient, unitless
I = Rainfall intensity (for duration equal to T_c), in/hr
A = Drainage area, acres

	Water Quality Design Storm Event
P_{85} (inches)	0.6
I (in/hr)	1.4
Q_{85} (ac-in/hr)	**3.0**
Q_{85} (cfs)	**3.0**
V_{85} (ac-ft)	**0.11**

Pre-Development Watershed Characteristics:

A =	3.4	acres (areas associated only w/ developed plant)
L =	0.21	miles
S_e =	10.6	%
H =	119.0	feet
S_i =	10.0	%
D =	30.0	feet
C =	**0.64**	

Note:
The 85th percentile is a 24-hour rainfall total. It represents a value such that 85% of the observed 24-hour rainfall totals will be less than that value.

Pre-Development Watershed Calculations:

T_i =	2.1	minutes
T_t =	4.1	minutes
T_c =	6.2	minutes

	Design Storm Events					
Return (years)	2	5	10	25	50	100
$P_{6\text{-hr}}$ (inches)	1.2	1.6	1.8	2	2.4	2.5
I (in/hr)	2.7	3.7	4.1	4.6	5.5	5.7
Q_p (ac-in/hr)	**5.9**	**7.9**	**8.9**	**9.9**	**11.9**	**12.4**
Q_p (cfs)	**5.9**	**7.9**	**8.8**	**9.8**	**11.8**	**12.3**
V_p (ac-ft)	**0.22**	**0.29**	**0.32**	**0.36**	**0.43**	**0.45**

Quail Brush Site (Central Watershed) - Preliminary Post-Development Watershed Hydrology Analysis (Disturbed Areas Only):

Note - This analysis is intended as a planning exercise in order to compare the effects from the project development to existing conditions, particularly the associated changes for the runoff coefficient and the time of concentration relative to the rainfall intensity, for only the disturbed footprint areas without regard to the remainder of the respective watershed comprising undeveloped areas. This exercise considers only these disturbed areas as developed project areas and also assumes isolation of these disturbed areas and diversion of all other adjacent undeveloped areas.

The watershed characteristics were estimated utilizing GIS, AutoCAD and Civil3D.
The runoff coefficients for developed areas were conservatively estimated from Hydrologic Analysis and Design, McCuen 1998.
The time of concentration was estimated utilizing FAA's Formula, Ave. Velocity & Kirpich's Formula for small mountainous basins.
The rainfall intensity was conservatively estimated by procedures outlined in San Diego County/City's Hydrology Manual.
The peak runoff flow rates were computed with the Rational Method per San Diego County/City's Hydrology Manual.

Rainfall Intensity formula: $I = 7.44 * P_{6\text{-}hr} * T_c^{-0.645}$

FAA's formula: $T_i = 1.8 * (1.1 - C) * D^{0.5} * S^{-0.333}$

Kirpich's formula: $T_t = 60 * (11.9\ L^3 / H)^{0.385}$

Average Velocity formula: $T_t = 60 * L / V$

Where:

$P_{6\text{-}hr}$ = 6-hour precipitation event for a given design storm, inches
T_c = $T_i + T_t$ (time of concentration), minutes
T_i = Initial overland flow time, minutes
C = Runoff coefficient, unitless
D = Initial watercourse distance, feet
S_i = Initial surface slope, %
T_t = Travel time, minutes
L = Watercourse length, miles or feet
S_e = Effective watercourse slope, %
H = Change in elevation along effective slope line, feet
V = Assumed average velocity for channel flow, feet per second

Rational Method: $Q_p = C\ I\ A$ $V_p = C\ P_{6\text{-}hr}\ A$

Where:

Q_p = Peak runoff flow rate, cfs
V_p = Peak runoff volume, ac-ft
C = Weighted Runoff coefficient, unitless
I = Rainfall intensity (for duration equal to T_c), in/hr
A = Drainage area, acres

Post-Development Watershed Characteristics:

A =	6.8	acres (developed areas associated with plant)
L =	1,241	feet
V =	5.0	ft/s
S_e =	10.6	%
H =	132.0	feet
S_i =	0.5	%
D =	50.0	feet
C_1 =	**0.44**	**(landscaped - meadow >6%, Soil C - McCuen)**
C_2 =	**0.64**	**(undeveloped - see existing)**
C_3 =	**0.85**	**(asphalt - CalTrans)**
C_4 =	**0.85**	**(roofs - CalTrans)**
C_5 =	**0.00**	**(secondary containment)**
C_6 =	**0.75**	**(drives - CalTrans)**
C_7 =	**0.85**	**(miscellaneous = roofs)**
Weighted C =	**0.62**	

Post-Development Watershed Calculations:

T_i =	4.0	minutes
T_t =	4.1	minutes
T_c =	8.1	minutes

San Diego County/City Hydrology Manual:
Quail Brush Site Rainfall Isopluvials

Return (years)	$P_{6\text{-}hr}$ (inches)	$P_{24\text{-}hr}$ (inches)	P_6/P_{24} (%)
2	1.2	1.8	66.7
5	1.6	2.5	64.0
10	1.8	2.9	62.1
25	2.0	3.7	54.1
50	2.4	4.2	57.1
100	2.5	4.7	53.2

Developed Subarea Weighted C Analysis
(See Subarea Summary for Breakdown)

Subarea	Area (ac)	C	A*C
C02	0.27	0.44	0.120
C03	1.32	0.69	0.908
C04	0.25	0.44	0.109
C05	1.12	0.70	0.785
C06	1.27	0.64	0.809
C07	0.31	0.75	0.231
C08	0.74	0.44	0.326
C09	0.68	0.85	0.577
C10	0.37	0.44	0.161
C11	0.51	0.44	0.223

	Water Quality Design Storm Event
P_{85} (inches)	0.6
I (in/hr)	1.2
Q_{85} (ac-in/hr)	**4.9**
Q_{85} (cfs)	**4.9**
V_{85} (ac-ft)	**0.21**

Note:
The 85th percentile is a 24-hour rainfall total.
It represents a value such that 85% of the observed 24-hour rainfall totals will be less than that value.

	Design Storm Events					
Return (years)	2	5	10	25	50	100
$P_{6\text{-}hr}$ (inches)	1.2	1.6	1.8	2.0	2.4	2.5
I (in/hr)	2.3	3.1	3.5	3.8	4.6	4.8
Q_p (ac-in/hr)	**9.8**	**13.1**	**14.7**	**16.3**	**19.6**	**20.4**
Q_p (cfs)	**9.7**	**13.0**	**14.6**	**16.2**	**19.5**	**20.3**
V_p (ac-ft)	**0.42**	**0.57**	**0.64**	**0.71**	**0.85**	**0.89**

TETRA TECH EC,INC

CLIENT:	Cogentrix	MADE BY:	GPH/CEB	DATE:	9/20/2012
JOB TITLE:	Quail Brush Generation Project	CHECKED:	SO	JOB # :	106-4346
SUBJECT:	Prelim. Watershed Hydrology Analysis - Rational Method	APPROVED:	WLS	SHEET:	4 of 4

Quail Brush Site (South Watershed) - Preliminary Post-Development Watershed Hydrology Analysis (Disturbed Areas Only):

Note - This analysis is intended as a planning exercise in order to compare the effects from the project development to existing conditions, particularly the associated changes for the runoff coefficient and the time of concentration relative to the rainfall intensity, for only the disturbed footprint areas without regard to the remainder of the respective watershed comprising undeveloped areas. This exercise considers only these disturbed areas as developed project areas and also assumes isolation of these disturbed areas and diversion of all other adjacent undeveloped areas.

The watershed characteristics were estimated utilizing GIS, AutoCAD and Civil3D.
The runoff coefficients for developed areas were conservatively estimated from Hydrologic Analysis and Design, McCuen 1998.
The time of concentration was estimated utilizing FAA's Formula, Ave. Velocity & Kirpich's Formula for small mountainous basins.
The rainfall intensity was conservatively estimated by procedures outlined in San Diego County/City's Hydrology Manual.
The peak runoff flow rates were computed with the Rational Method per San Diego County/City's Hydrology Manual.

Rainfall Intensity formula: $I = 7.44 * P_{6\text{-hr}} * T_c^{-0.645}$

FAA's formula: $T_i = 1.8 * (1.1 - C) * D^{0.5} * S^{-0.333}$

Kirpich's formula: $T_t = 60 * (11.9\ L^3 / H)^{0.385}$

Average Velocity formula: $T_t = 60 * L / V$

Where:

$P_{6\text{-hr}}$ = 6-hour precipitation event for a given design storm, inches
T_c = $T_i + T_t$ (time of concentration), minutes
T_i = Initial overland flow time, minutes
C = Runoff coefficient, unitless
D = Initial watercourse distance, feet
S_i = Initial surface slope, %
T_t = Travel time, minutes
L = Watercourse length, miles or feet
S_e = Effective watercourse slope, %
H = Change in elevation along effective slope line, feet
V = Assumed average velocity for channel flow, feet per second

Rational Method: $Q_p = C\ I\ A$ $V_p = C\ P_{6\text{-hr}}\ A$

Where:

Q_p = Peak runoff flow rate, cfs
V_p = Peak runoff volume, ac-ft
C = Weighted Runoff coefficient, unitless
I = Rainfall intensity (for duration equal to T_c), in/hr
A = Drainage area, acres

San Diego County/City Hydrology Manual:
Quail Brush Site Rainfall Isopluvials

Return (years)	$P_{6\text{-hr}}$ (inches)	$P_{24\text{-hr}}$ (inches)	P_6/P_{24} (%)
2	1.2	1.8	66.7
5	1.6	2.5	64.0
10	1.8	2.9	62.1
25	2.0	3.7	54.1
50	2.4	4.2	57.1
100	2.5	4.7	53.2

Developed Subarea Weighted C Analysis
(See Subarea Summary for Breakdown)

Subarea	Area (ac)	C	A*C
S02	0.33	0.44	0.146
S03	0.51	0.64	0.332
S04	1.01	0.76	0.773
S05	0.20	0.44	0.089
S06	0.40	0.64	0.257
S07	0.75	0.55	0.411
S08	0.16	0.63	0.102

Post-Development Watershed Characteristics:

A =	3.4	acres (developed areas associated with plant)
L =	1,727	feet
V =	5.0	ft/s
S_e =	6.5	%
H =	111.4	feet
S_i =	0.5	%
D =	50.0	feet
C_1 =	**0.44**	**(landscaped - meadow >6%, Soil C - McCuen)**
C_2 =	**0.64**	**(undeveloped - see existing)**
C_3 =	**0.85**	**(asphalt - CalTrans)**
C_4 =	**0.85**	**(roofs - CalTrans)**
C_5 =	**0.00**	**(secondary containment)**
C_6 =	**0.75**	**(drives - CalTrans)**
C_7 =	**0.85**	**(miscellaneous = roofs)**
Weighted C =	**0.62**	

	Water Quality Design Storm Event
P_{85} (inches)	0.6
I (in/hr)	1.0
Q_{85} (ac-in/hr)	**2.2**
Q_{85} (cfs)	**2.2**
V_{85} (ac-ft)	**0.11**

Note:
The 85th percentile is a 24-hour rainfall total.
It represents a value such that 85% of the observed 24-hour rainfall totals will be less than that value.

Post-Development Watershed Calculations:

T_i =	4.0	minutes
T_t =	5.8	minutes
T_c =	9.8	minutes

	Design Storm Events					
Return (years)	2	5	10	25	50	100
$P_{6\text{-hr}}$ (inches)	1.2	1.6	1.8	2.0	2.4	2.5
I (in/hr)	2.1	2.7	3.1	3.4	4.1	4.3
Q_p (ac-in/hr)	**4.3**	**5.8**	**6.5**	**7.2**	**8.7**	**9.0**
Q_p (cfs)	**4.3**	**5.7**	**6.5**	**7.2**	**8.6**	**9.0**
V_p (ac-ft)	**0.21**	**0.28**	**0.32**	**0.35**	**0.42**	**0.44**

TETRA TECH EC,INC

		CLIENT:	Cogentrix	MADE BY:	GPH/CEB	DATE:	9/20/2012
JOB TITLE:	Quail Brush Generation Project			CHECKED:	SO	JOB # :	106-4346
SUBJECT:	Prelim. Watershed Hydrology Analysis - Rational Method			APPROVED:	WLS	SHEET:	1 of 1

Quail Brush Site - Preliminary Post-Development Sub-Area Watershed Hydrology Analysis (Undeveloped Areas Only):

Note - This analysis is intended as a planning exercise in order to account for only the undeveloped areas without regard to the remainder of the respective watershed comprising disturbed areas associated with the project development. This exercise considers only these existing undeveloped areas in steep terrain and also assumes isolation of these undisturbed areas and diversion of all other adjacent developed areas.

The watershed characteristics were estimated utilizing GIS, AutoCAD and Civil3D.
The runoff coefficient for undeveloped areas was conservatively estimated utilizing the CALTRANS Highway Design Manual.
The time of concentration was estimated utilizing FAA's Formula & Kirpich's Formula, appropriate for small mountainous basins.
The rainfall intensity was conservatively estimated by procedures outlined in San Diego County/City's Hydrology Manual.
The peak runoff flow rates were computed with the Rational Method per San Diego County/City's Hydrology Manual.

Subarea	**Area Description**	A (ft^2)	A (ac)	C	A*C	T_c (min)	R (yrs)	$P_{6\text{-}hr}$ (in)	I (in/hr)	**Q_p (ac-in/hr)**	**Q_p (cfs)**	**V_p (ac-ft)**
C01	Undeveloped Drainage Basin	186,762	4.29	0.64	2.74	5.0	100	2.5	6.59	18.1	17.9	0.57
C12	Undeveloped Drainage Basin	105,697	2.43	0.64	1.55	5.0	100	2.5	6.59	10.2	10.1	0.32
C13	Undeveloped Drainage Basin	28,330	0.65	0.64	0.42	5.0	100	2.5	6.59	2.7	2.7	0.09
Total	**Central Watershed**	**320,788**	**7.4**	**0.64**	**4.71**	**6.8**	**100**	**2.5**	**5.40**	**25.4**	**25.2**	**0.98**

Subarea	**Area Description**	A (ft^2)	A (ac)	C	A*C	T_c (min)	R (yrs)	$P_{6\text{-}hr}$ (in)	I (in/hr)	**Q_p (ac-in/hr)**	**Q_p (cfs)**	**V_p (ac-ft)**
S01	Undeveloped Drainage Basin	524,779	12.05	0.64	7.71	7.5	100	2.5	5.06	39.0	38.7	1.61
S09	Undeveloped Drainage Basin	120,937	2.78	0.64	1.78	5.0	100	2.5	6.59	11.7	11.6	0.37
Total	**South Watershed**	**645,716**	**14.8**	**0.64**	**9.49**	**7.5**	**100**	**2.5**	**5.06**	**48.0**	**47.6**	**1.98**

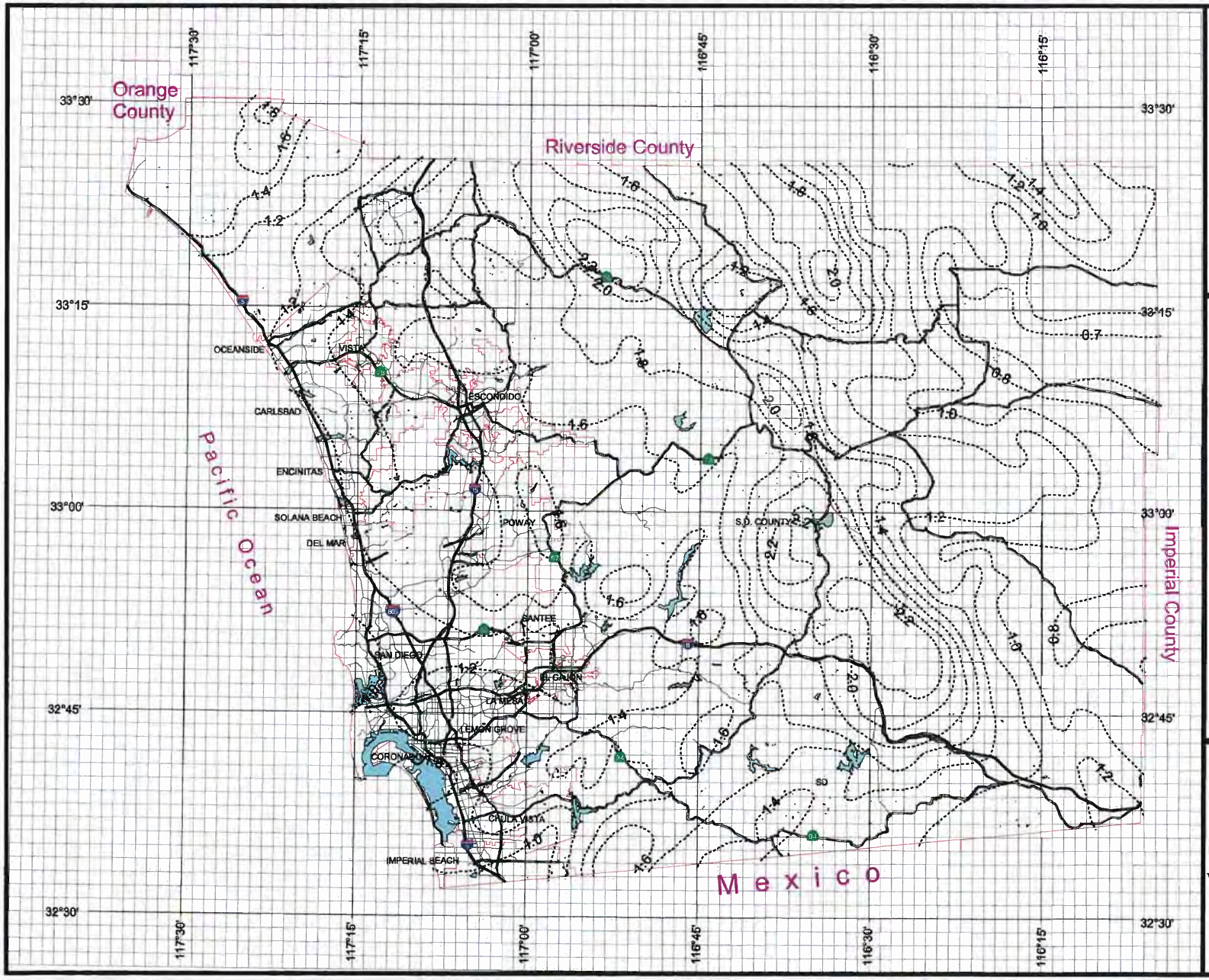

County of San Diego Hydrology Manual

Rainfall Isopluvials

2 Year Rainfall Event - 6 Hours

Isopluvial (inches)

DPW GIS
Department of Public Works
Geographic Information Services

SanGIS
We Have San Diego Covered!

N
W E
S

3 0 3 Miles

THIS MAP IS PROVIDED WITHOUT WARRANTY OF ANY KIND, EITHER EXPRESS OR IMPLIED, INCLUDING, BUT NOT LIMITED TO, THE IMPLIED WARRANTIES OF MERCHANTABILITY AND FITNESS FOR A PARTICULAR PURPOSE
Copyright SanGIS All Rights Reserved

This products may contain information from the SANDAG Regional Information System which cannot be reproduced without the written permission of SANDAG.

This product may contain information which has been reproduced with permission granted by Thomas Brothers Maps.

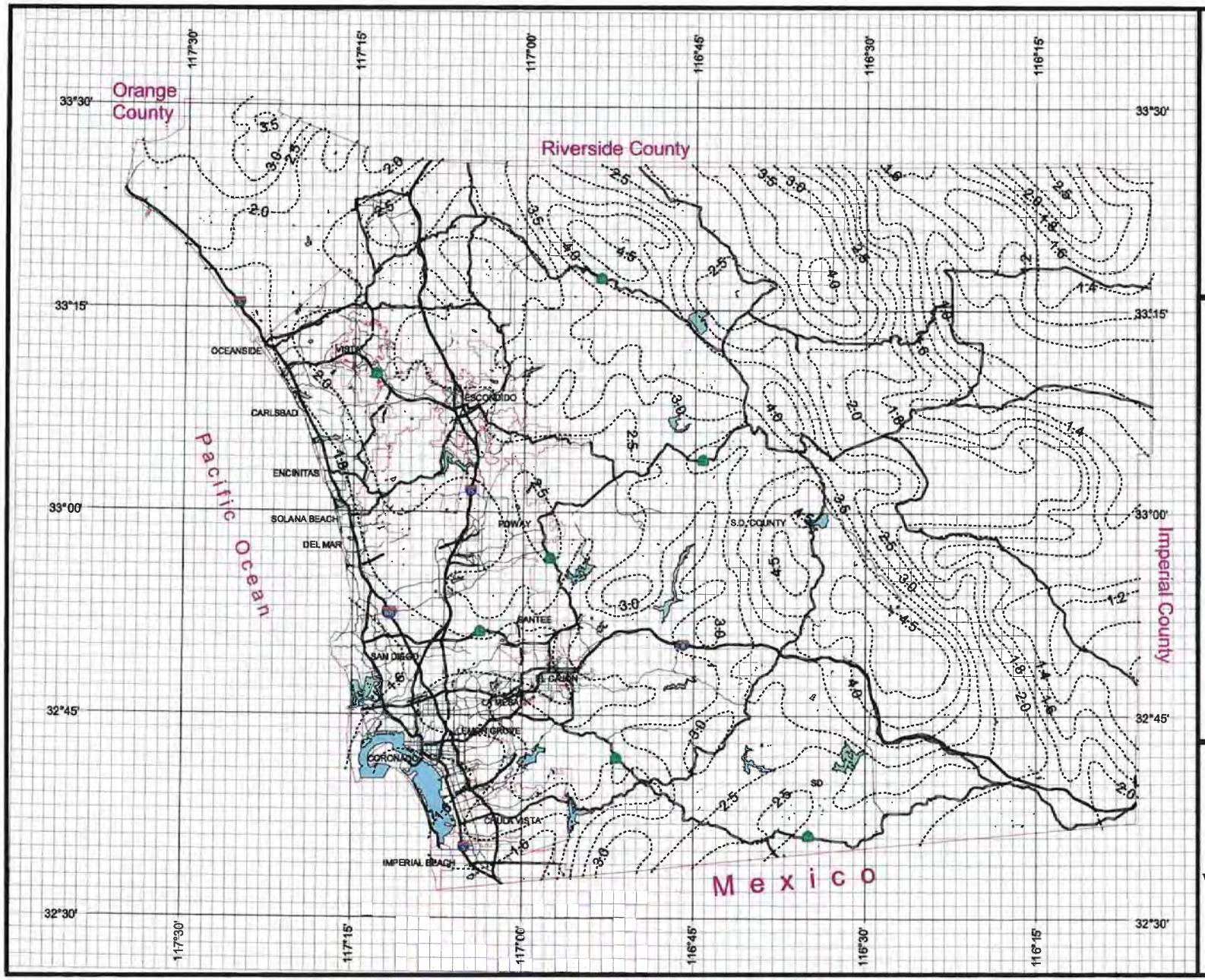

County of San Diego Hydrology Manual

Rainfall Isopluvials

2 Year Rainfall Event - 24 Hours

Isopluvial (inches)

DPW GIS
Department of Public Works
Geographic Information Services

SanGIS
We Have San Diego Covered!

N
W E
S

3 0 3 Miles

THIS MAP IS PROVIDED WITHOUT WARRANTY OF ANY KIND, EITHER EXPRESS OR IMPLIED, INCLUDING, BUT NOT LIMITED TO, THE IMPLIED WARRANTIES OF MERCHANTABILITY AND FITNESS FOR A PARTICULAR PURPOSE.
Copyright SanGIS. All Rights Reserved.

This products may contain information from the SANDAG Regional Information System which cannot be reproduced without the written permission of SANDAG.

This product may contain information which has been reproduced with permission granted by Thomas Brothers Maps.

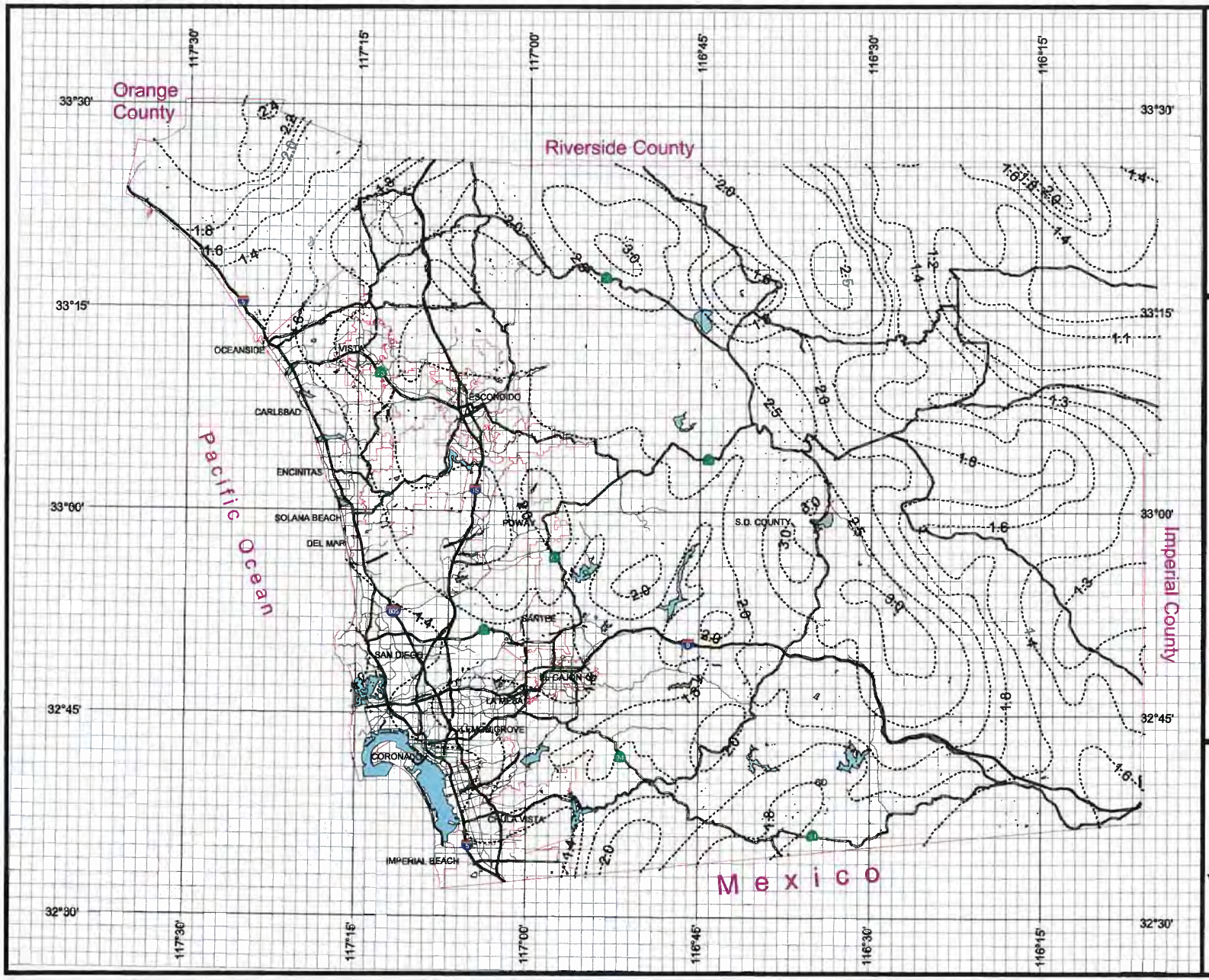

County of San Diego Hydrology Manual

Rainfall Isopluvials

5 Year Rainfall Event - 6 Hours

Isopluvial (inches)

DPW GIS
Department of Public Works
Geographic Information Services

SanGIS
We Have San Diego Covered!

N
W E
S

3 0 3 Miles

THIS MAP IS PROVIDED WITHOUT WARRANTY OF ANY KIND, EITHER EXPRESS OR IMPLIED, INCLUDING, BUT NOT LIMITED TO, THE IMPLIED WARRANTIES OF MERCHANTABILITY AND FITNESS FOR A PARTICULAR PURPOSE
Copyright SanGIS. All Rights Reserved.

This products may contain information from the SANDAG Regional Information System which cannot be reproduced without the written permission of SANDAG.

This product may contain information which has been reproduced with permission granted by Thomas Brothers Maps.

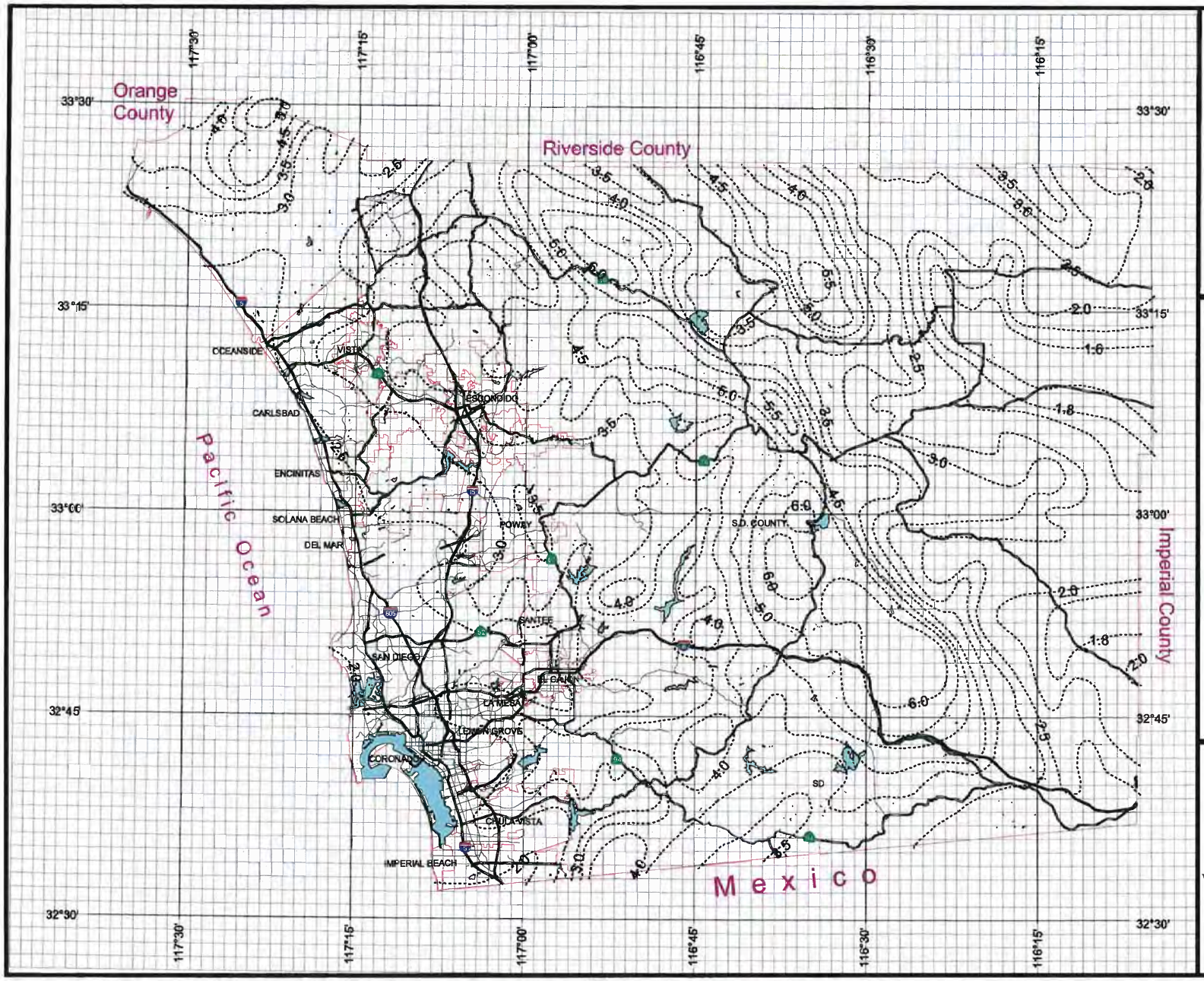

County of San Diego Hydrology Manual

Rainfall Isopluvials

5 Year Rainfall Event - 24 Hours

Isopluvial (inches)

DPW GIS
Department of Public Works
Geographic Information Services

SanGIS
We Have San Diego Covered!

N
W E
S

3 0 3 Miles

THIS MAP IS PROVIDED WITHOUT WARRANTY OF ANY KIND, EITHER EXPRESS OR IMPLIED, INCLUDING, BUT NOT LIMITED TO, THE IMPLIED WARRANTIES OF MERCHANTABILITY AND FITNESS FOR A PARTICULAR PURPOSE. Copyright SanGIS. All Rights Reserved.

This products may contain information from the SANDAG Regional Information System which cannot be reproduced without the written permission of SANDAG.

This product may contain information which has been reproduced with permission granted by Thomas Brothers Maps.

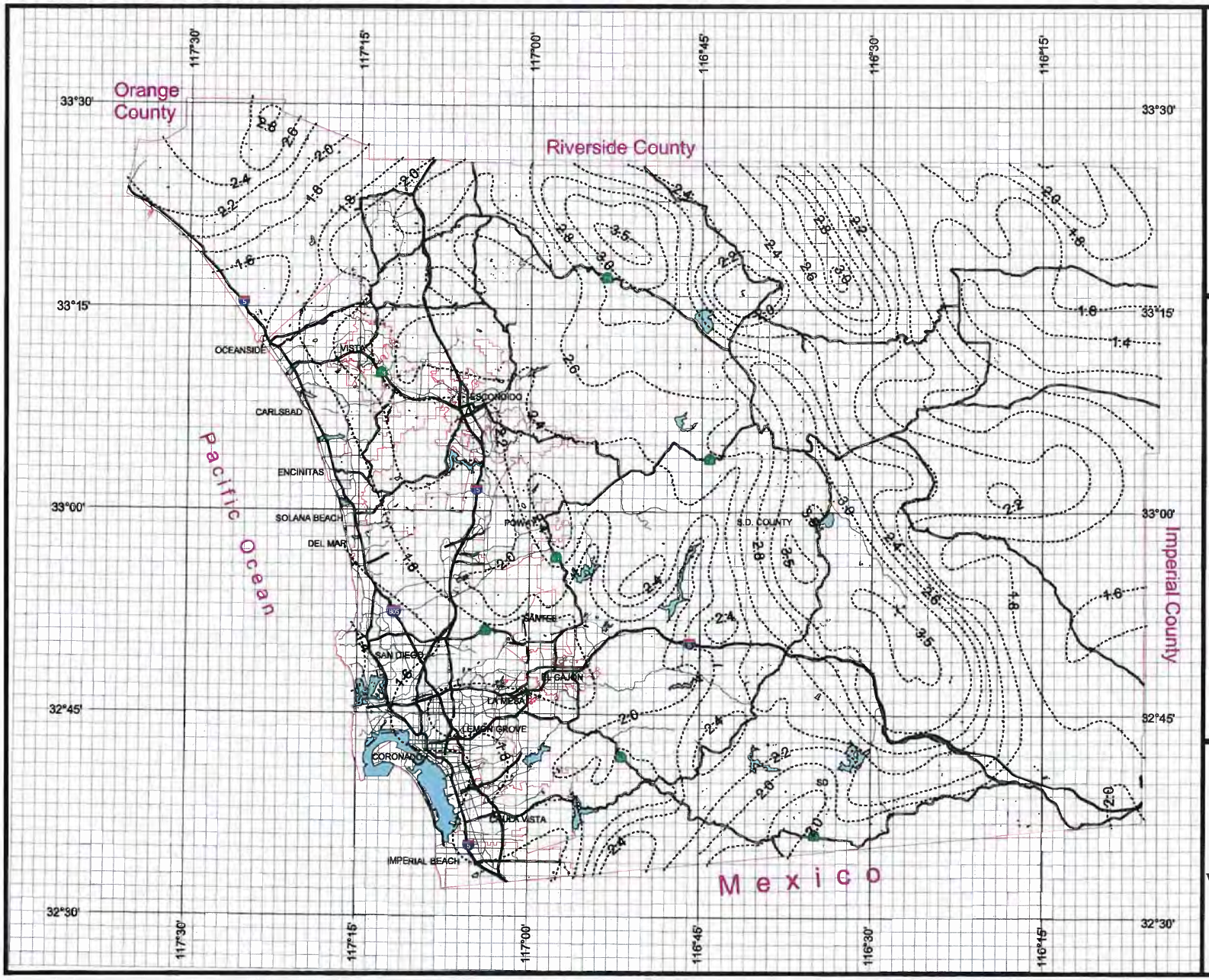

County of San Diego Hydrology Manual

Rainfall Isopluvials

10 Year Rainfall Event - 6 Hours

Isopluvial (inches)

DPW GIS
Department of Public Works
Geographic Information Services

SanGIS
We Have San Diego Covered!

N
W E
S

3 0 3 Miles

THIS MAP IS PROVIDED WITHOUT WARRANTY OF ANY KIND, EITHER EXPRESS OR IMPLIED, INCLUDING, BUT NOT LIMITED TO, THE IMPLIED WARRANTIES OF MERCHANTABILITY AND FITNESS FOR A PARTICULAR PURPOSE
Copyright SanGIS. All Rights Reserved.

This products may contain information from the SANDAG Regional Information System which cannot be reproduced without the written permission of SANDAG.

This product may contain information which has been reproduced with permission granted by Thomas Brothers Maps.

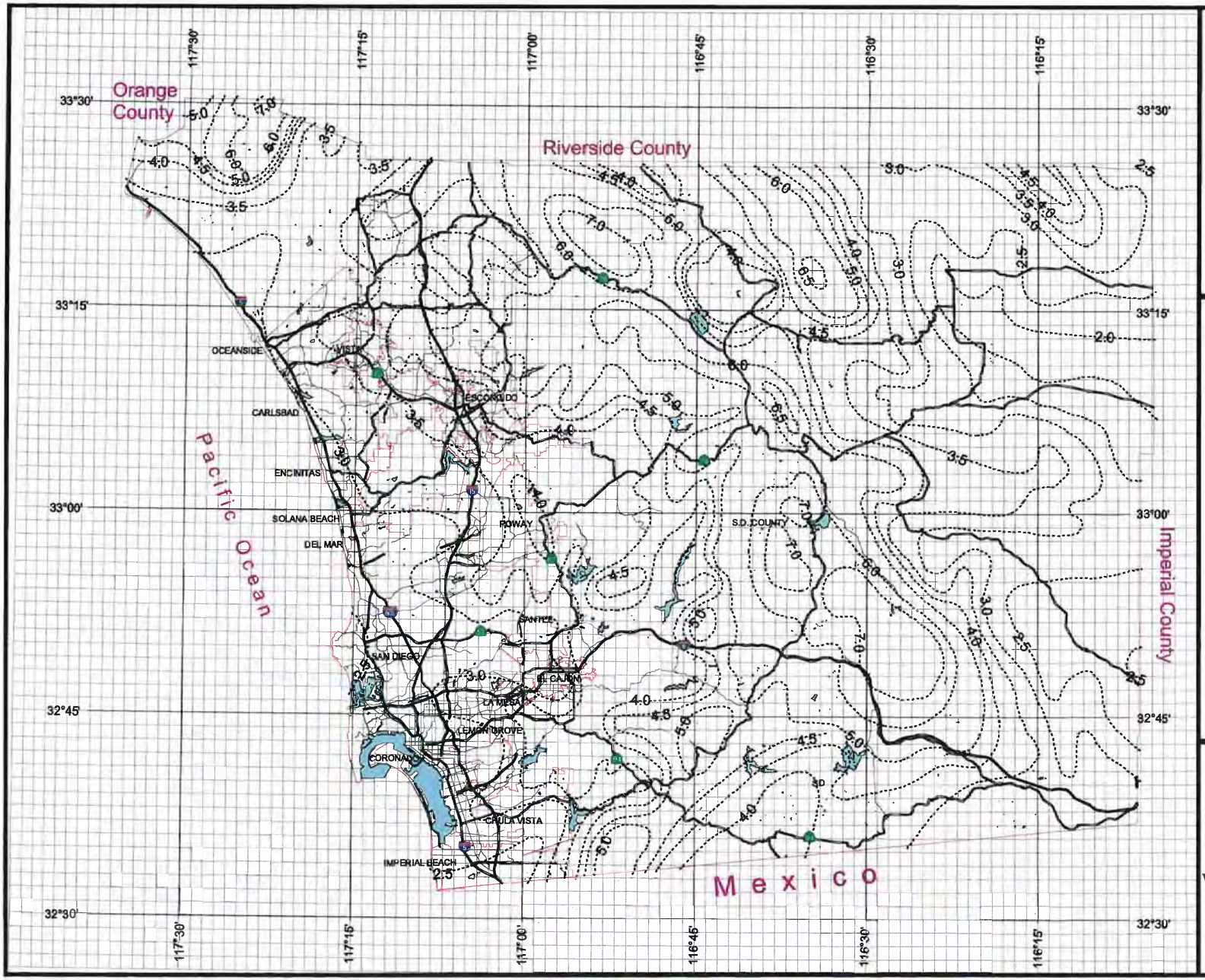

County of San Diego Hydrology Manual

Rainfall Isopluvials

10 Year Rainfall Event - 24 Hours

Isopluvial (inches)

DPW GIS
Department of Public Works Geographic Information Services

SanGIS
We Have San Diego Covered!

N
W E
S

3 0 3 Miles

THIS MAP IS PROVIDED WITHOUT WARRANTY OF ANY KIND, EITHER EXPRESS OR IMPLIED, INCLUDING, BUT NOT LIMITED TO, THE IMPLIED WARRANTIES OF MERCHANTABILITY AND FITNESS FOR A PARTICULAR PURPOSE. Copyright SanGIS. All Rights Reserved.

This products may contain information from the SANDAG Regional Information System which cannot be reproduced without the written permission of SANDAG.

This product may contain information which has been reproduced with permission granted by Thomas Brothers Maps.

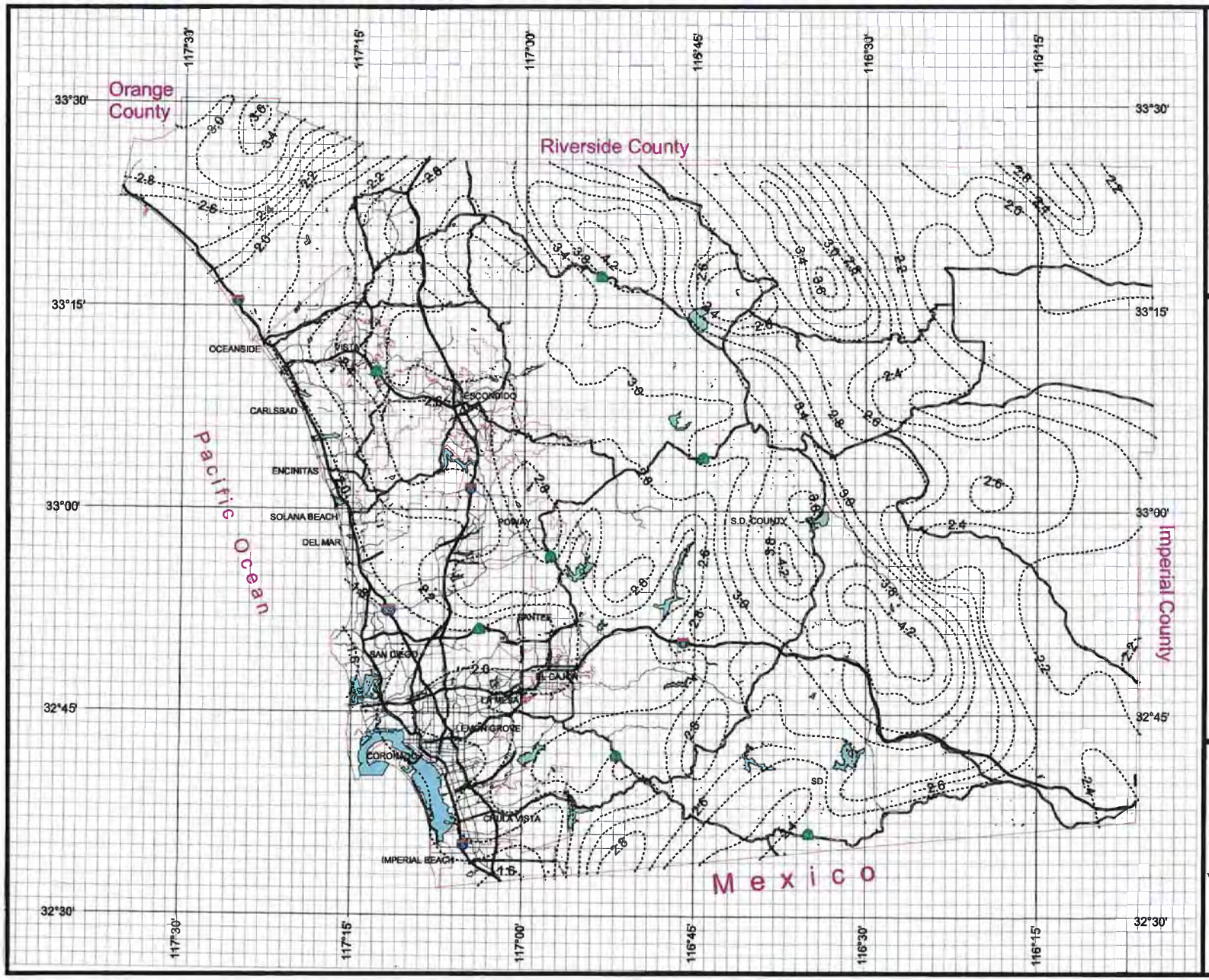

County of San Diego Hydrology Manual

Rainfall Isopluvials

25 Year Rainfall Event - 6 Hours

Isopluvial (inches)

DPW GIS
Department of Public Works
Geographic Information Services

SanGIS
We Have San Diego Covered!

N
W E
S

THIS MAP IS PROVIDED WITHOUT WARRANTY OF ANY KIND, EITHER EXPRESS OR IMPLIED, INCLUDING, BUT NOT LIMITED TO, THE IMPLIED WARRANTIES OF MERCHANTABILITY AND FITNESS FOR A PARTICULAR PURPOSE.
Copyright SanGIS. All Rights Reserved.

This products may contain information from the SANDAG Regional Information System which cannot be reproduced without the written permission of SANDAG.

This product may contain information which has been reproduced with permission granted by Thomas Brothers Maps.

3 0 3 Miles

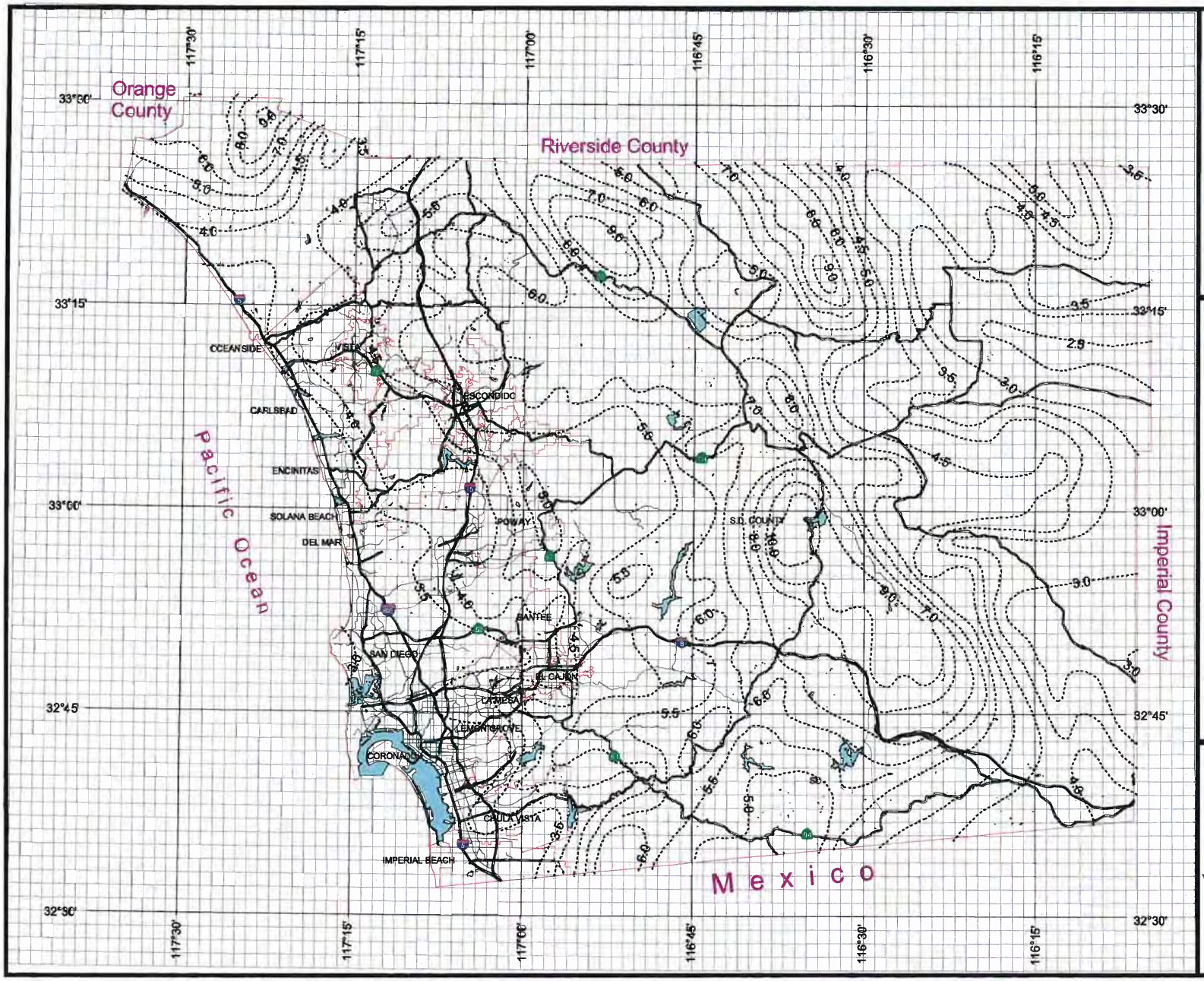

County of San Diego Hydrology Manual

Rainfall Isopluvials

25 Year Rainfall Event - 24 Hours

Isopluvial (inches)

DPW GIS
Department of Public Works
Geographic Information Services

SanGIS
We Have San Diego Covered!

N
W E
S

3 0 3 Miles

THIS MAP IS PROVIDED WITHOUT WARRANTY OF ANY KIND, EITHER EXPRESS OR IMPLIED, INCLUDING, BUT NOT LIMITED TO, THE IMPLIED WARRANTIES OF MERCHANTABILITY AND FITNESS FOR A PARTICULAR PURPOSE. Copyright SanGIS. All Rights Reserved.

This products may contain information from the SANDAG Regional Information System which cannot be reproduced without the written permission of SANDAG.

This product may contain information which has been reproduced with permission granted by Thomas Brothers Maps.

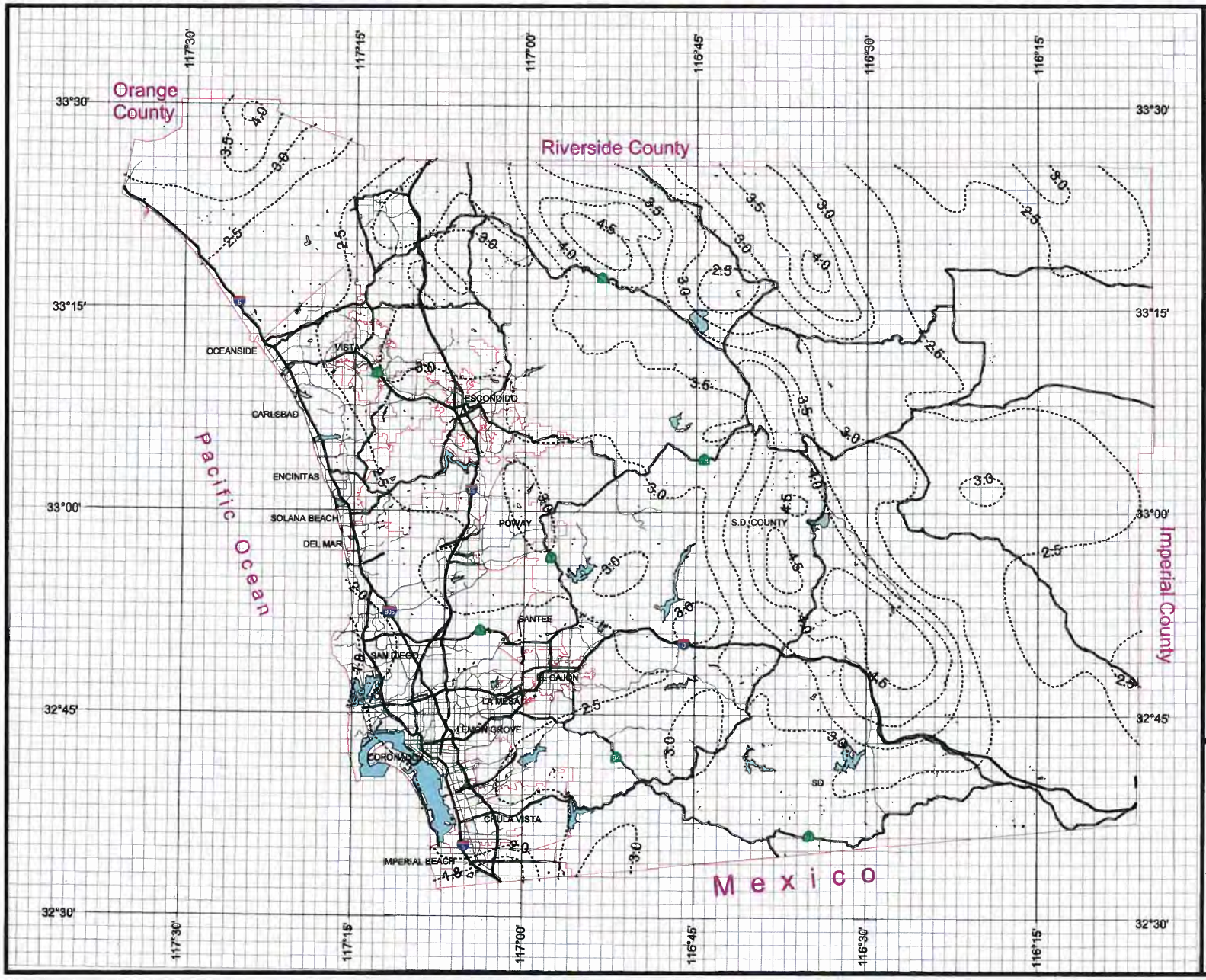

County of San Diego Hydrology Manual

Rainfall Isopluvials

50 Year Rainfall Event - 6 Hours

Isopluvial (inches)

DPW GIS
Department of Public Works Geographic Information Services

SanGIS
We Have San Diego Covered!

N
W E
S

3 0 3 Miles

THIS MAP IS PROVIDED WITHOUT WARRANTY OF ANY KIND, EITHER EXPRESS OR IMPLIED, INCLUDING, BUT NOT LIMITED TO, THE IMPLIED WARRANTIES OF MERCHANTABILITY AND FITNESS FOR A PARTICULAR PURPOSE. Copyright SanGIS. All Rights Reserved.

This products may contain information from the SANDAG Regional Information System which cannot be reproduced without the written permission of SANDAG.

This product may contain information which has been reproduced with permission granted by Thomas Brothers Maps.

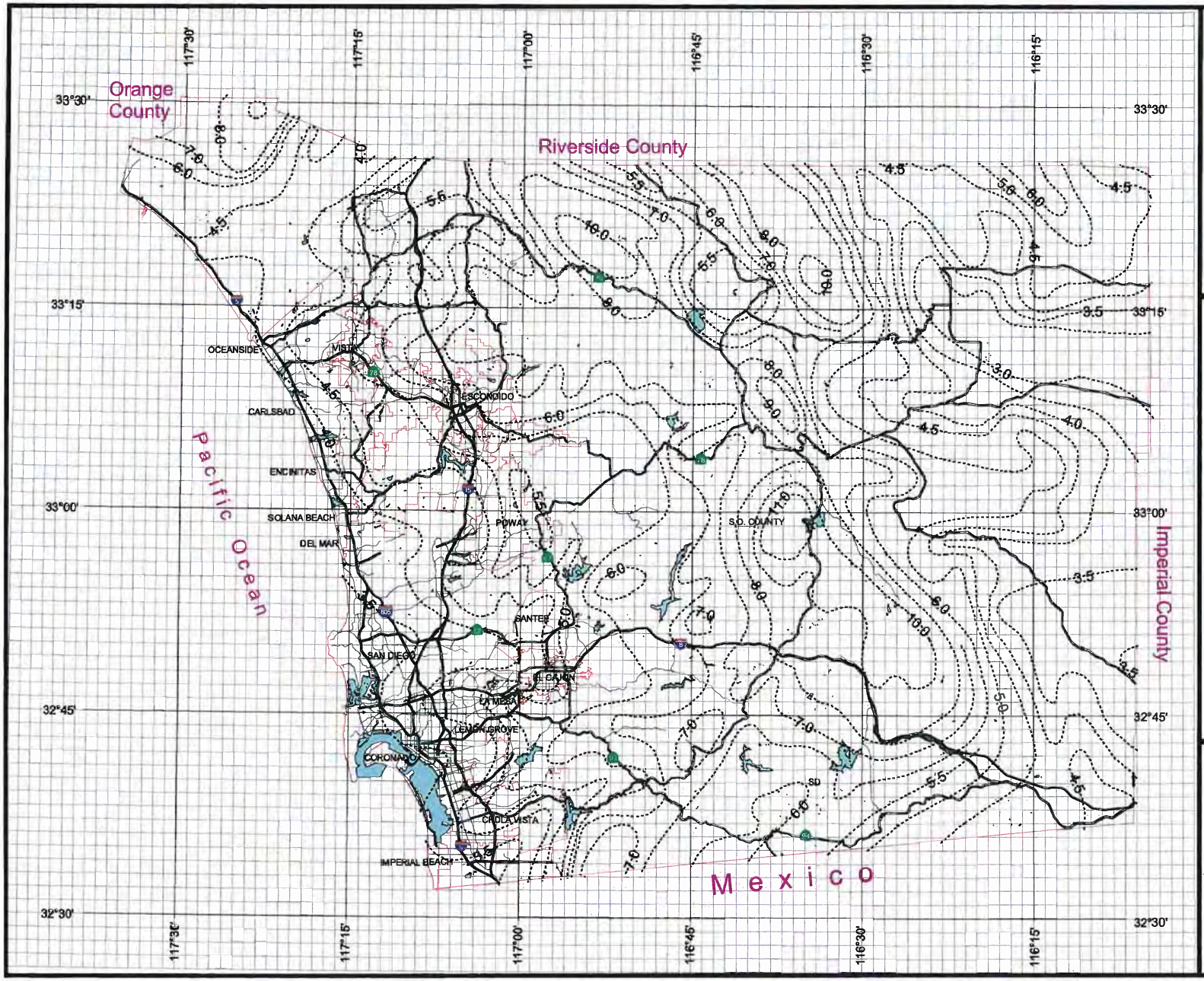

County of San Diego Hydrology Manual

Rainfall Isopluvials

50 Year Rainfall Event - 24 Hours

Isopluvial (inches)

DPW GIS
Department of Public Works Geographic Information Services

SanGIS
We Have San Diego Covered!

N
W E
S

3 0 3 Miles

THIS MAP IS PROVIDED WITHOUT WARRANTY OF ANY KIND, EITHER EXPRESS OR IMPLIED, INCLUDING, BUT NOT LIMITED TO, THE IMPLIED WARRANTIES OF MERCHANTABILITY AND FITNESS FOR A PARTICULAR PURPOSE. Copyright SanGIS. All Rights Reserved.

This products may contain information from the SANDAG Regional Information System which cannot be reproduced without the written permission of SANDAG.

This product may contain information which has been reproduced with permission granted by Thomas Brothers Maps.

County of San Diego Hydrology Manual

Rainfall Isopluvials

100 Year Rainfall Event - 6 Hours

Isopluvial (inches)

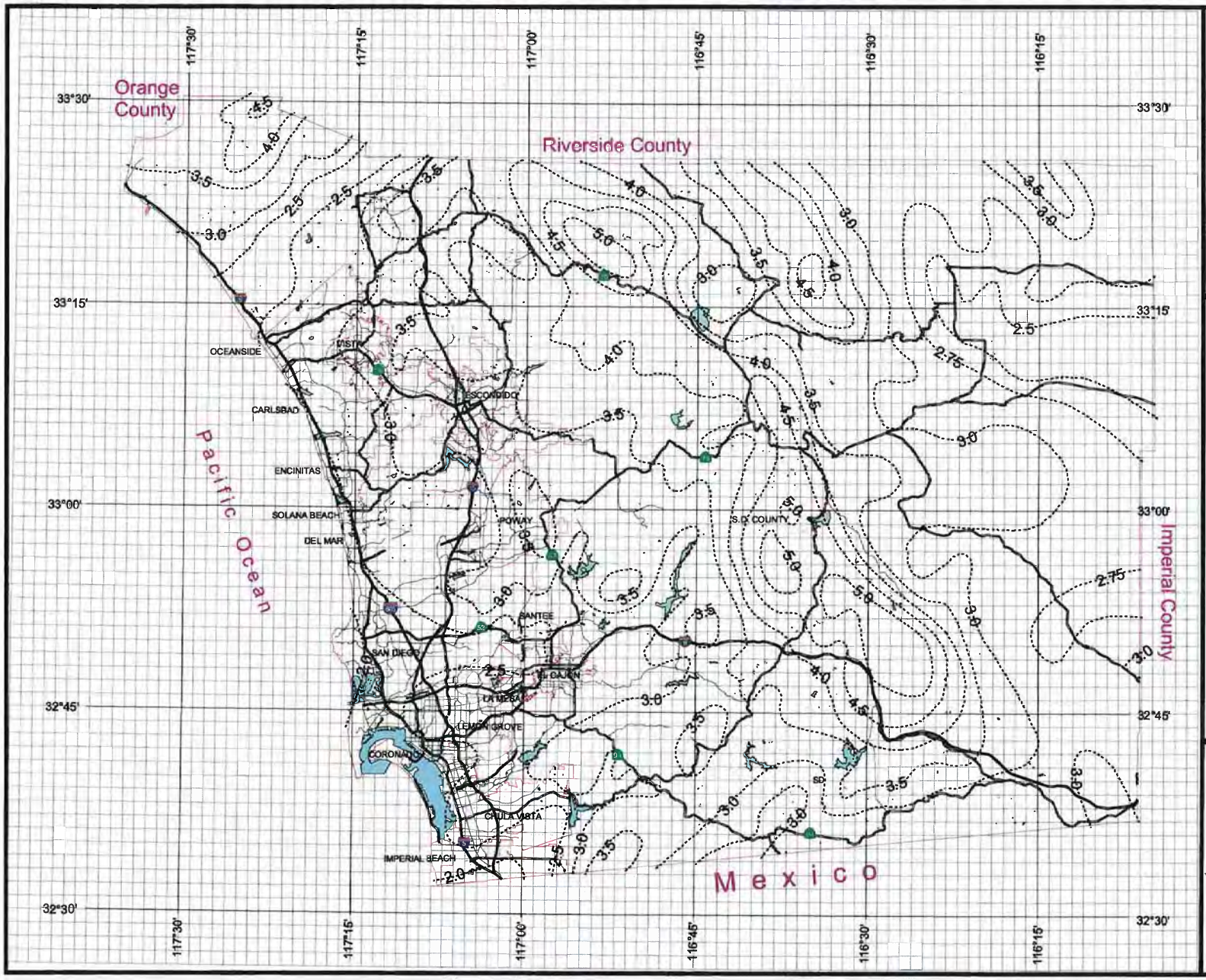

DPW GIS
Department of Public Works
Geographic Information Services

SanGIS
We Have San Diego Covered!

N
W E
S

3 0 3 Miles

THIS MAP IS PROVIDED WITHOUT WARRANTY OF ANY KIND, EITHER EXPRESS OR IMPLIED, INCLUDING, BUT NOT LIMITED TO, THE IMPLIED WARRANTIES OF MERCHANTABILITY AND FITNESS FOR A PARTICULAR PURPOSE. Copyright SanGIS. All Rights Reserved.

This products may contain information from the SANDAG Regional Information System which cannot be reproduced without the written permission of SANDAG.

This product may contain information which has been reproduced with permission granted by Thomas Brothers Maps.

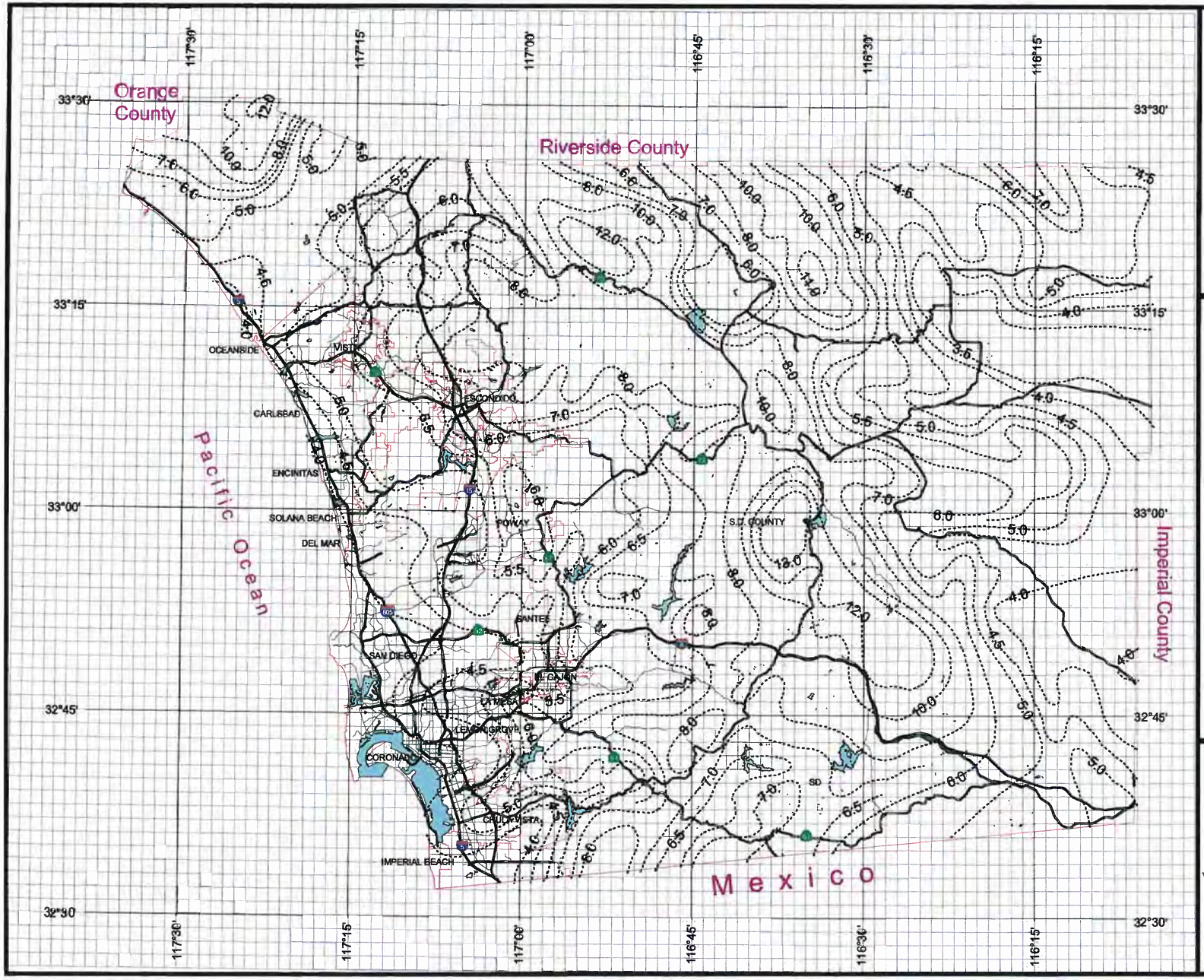

County of San Diego Hydrology Manual

Rainfall Isopluvials

100 Year Rainfall Event - 24 Hours

Isopluvial (inches)

DPW GIS
Department of Public Works
Geographic Information Services

SanGIS
We Have San Diego Covered!

N
W E
S

THIS MAP IS PROVIDED WITHOUT WARRANTY OF ANY KIND, EITHER EXPRESS OR IMPLIED, INCLUDING, BUT NOT LIMITED TO, THE IMPLIED WARRANTIES OF MERCHANTABILITY AND FITNESS FOR A PARTICULAR PURPOSE. Copyright SanGIS. All Rights Reserved.

This products may contain Information from the SANDAG Regional Information System which cannot be reproduced without the written permission of SANDAG.

This product may contain Information which has been reproduced with permission granted by Thomas Brothers Maps.

3 0 3 Miles

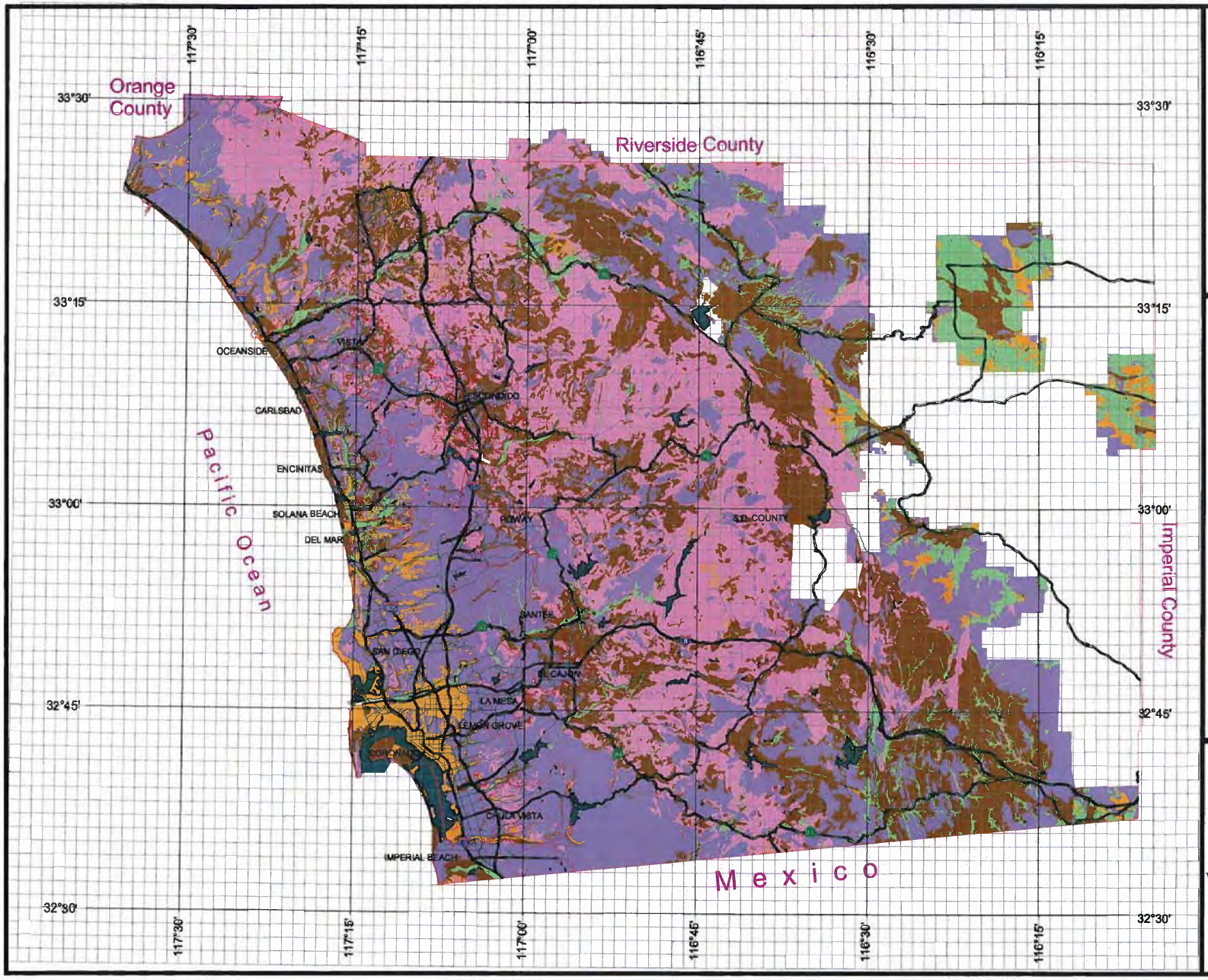

County of San Diego Hydrology Manual

Soil Hydrologic Groups

Legend

Soil Groups

- Group A
- Group B
- Group C
- Group D
- Undetermined
- Data Unavailable

DPW GIS
Department of Public Works
Geographic Information Services

SanGIS
We Have San Diego Covered!

N
W E
S

3 0 3 Miles

THIS MAP IS PROVIDED WITHOUT WARRANTY OF ANY KIND, EITHER EXPRESS OR IMPLIED, INCLUDING, BUT NOT LIMITED TO, THE IMPLIED WARRANTIES OF MERCHANTABILITY AND FITNESS FOR A PARTICULAR PURPOSE. Copyright SanGIS. All Rights Reserved.

This products may contain information from the SANDAG Regional Information System which cannot be reproduced without the written permission of SANDAG.

This product may contain information which has been reproduced with permission granted by Thomas Brothers Maps.

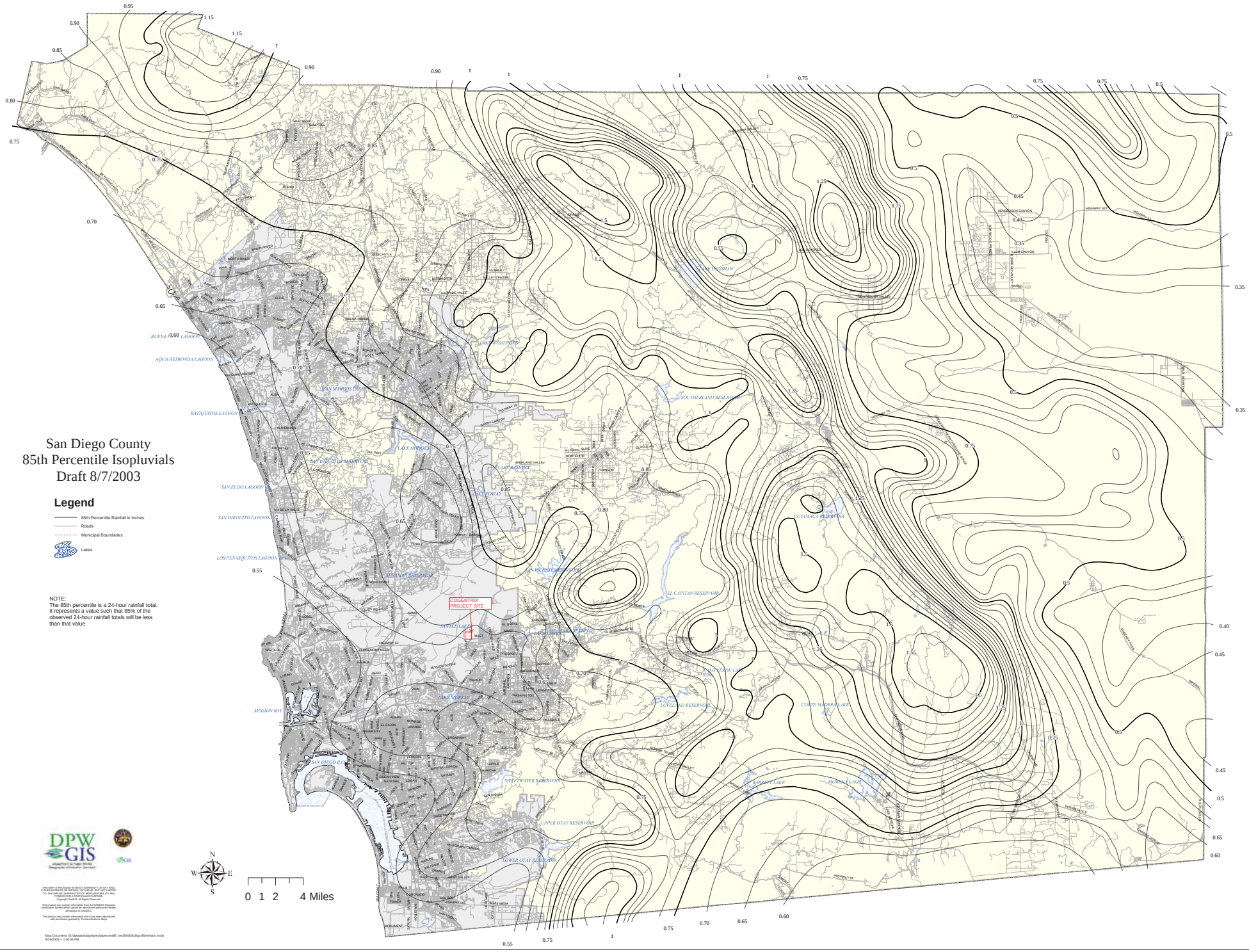
San Diego County
85th Percentile Isopluvials
Draft 8/7/2003
Legend
85th Percentile Rainfall in Inches
Roads
Municipal Boundaries
Lakes
NOTE:
The 85th percentile is a 24-hour rainfall total.
It represents a value such that 85% of the observed 24-hour rainfall totals will be less than that value.
COGENTRIX PROJECT SITE
BUENA LAGOON
AQUA HEDIONDA LAGOON
BATIQUITOS LAGOON
SAN ELIJO LAGOON
SAN DIEGUITO LAGOON
LOS PENASQUITOS LAGOON
MISSION BAY
SAN DIEGO BAY
SAN MARCOS LAKE
LAKE HODGES
SAN VICENTE RESERVOIR
MURRAY RESERVOIR
SAN ELIJO LAKE
LAKE POWAY
LAKE MORENA
LAKE CUYAMACA
LAKE JENNINGS
SOUTHERLAND RESERVOIR
CUYAMACA RESERVOIR
EL CAPITAN RESERVOIR
LAKE CHARLES
LAKE ISABELLA
LOVELAND RESERVOIR
COATE MAGER LAKE
SWEETWATER RESERVOIR
BARNETT LAKE
MORENA LAKE
UPPER OTAY RESERVOIR
LOWER OTAY RESERVOIR
0 1 2 4 Miles
N
S
E
W
DPW GIS
THIS MAP IS PROVIDED WITHOUT WARRANTY OF ANY KIND, EITHER EXPRESS OR IMPLIED, INCLUDING, BUT NOT LIMITED TO, THE IMPLIED WARRANTIES OF MERCHANTABILITY AND FITNESS FOR A PARTICULAR PURPOSE.
Copyright SanGIS. All Rights Reserved.
This product may contain information from the SANDAG Regional Information System which may be copyrighted without the written permission of SANDAG.
This product may contain information which has been reproduced with permission granted by Thomas Brothers Maps.
Map Document: (E:\dpwgis\tdd\pratper\pipercom85_mv0030\tdd\pcf85revision.mxd)
8/29/2003 -- 1:50:50 PM

Figure 819.2A

Runoff Coefficients for Undeveloped Areas

Watershed Types

	Extreme	High	Normal	Low
Relief	.28 -.35 Steep, rugged terrain with average slopes above 30%	.20 -.28 Hilly, with average slopes of 10 to 30%	.14 -.20 Rolling, with average slopes of 5 to 10%	.08 -.14 Relatively flat land, with average slopes of 0 to 5%
Soil Infiltration	.12 -.16 No effective soil cover, either rock or thin soil mantle of negligible infiltration capacity	.08 -.12 Slow to take up water, clay or shallow loam soils of low infiltration capacity, imperfectly or poorly drained	.06 -.08 Normal; well drained light or medium textured soils, sandy loams, silt and silt loams	.04 -.06 High; deep sand or other soil that takes up water readily, very light well drained soils
Vegetal Cover	.12 -.16 No effective plant cover, bare or very sparse cover	.08 -.12 Poor to fair; clean cultivation crops, or poor natural cover, less than 20% of drainage area over good cover	.06 -.08 Fair to good; about 50% of area in good grassland or woodland, not more than 50% of area in cultivated crops	.04 -.06 Good to excellent; about 90% of drainage area in good grassland, woodland or equivalent cover
Surface Storage	.10 -.12 Negligible surface depression few and shallow; drainageways steep and small, no marshes	.08 -.10 Low; well defined system of small drainageways; no ponds or marshes	.06 -.08 Normal; considerable surface depression storage; lakes and pond marshes	.04 -.06 High; surface storage, high; drainage system not sharply defined; large flood plain storage or large number of ponds or marshes

Given An undeveloped watershed consisting of;
1) rolling terrain with average slopes of 5%,
2) clay type soils,
3) good grassland area, and
4) normal surface depressions.

Solution:

Relief	0.14
Soil Infiltration	0.08
Vegetal Cover	0.04
Surface Storage	0.06
C=	0.32

Find The runoff coefficient, C, for the above watershed.

Table 819.2B

Runoff Coefficients for Developed Areas

Type of Drainage Area	Runoff Coefficient
Business:	
Downtown areas	0.70 - 0.95
Neighborhood areas	0.50 - 0.70
Residential:	
Single-family areas	0.30 - 0.50
Multi-units, detached	0.40 - 0.60
Multi-units, attached	0.60 - 0.75
Suburban	0.25 - 0.40
Apartment dwelling areas	0.50 - 0.70
Industrial:	
Light areas	0.50 - 0.80
Heavy areas	0.60 - 0.90
Parks, cemeteries:	0.10 - 0.25
Playgrounds:	0.20 - 0.40
Railroad yard areas:	0.20 - 0.40
Unimproved areas:	0.10 - 0.30
Lawns:	
Sandy soil, flat, 2%	0.05 - 0.10
Sandy soil, average, 2-7%	0.10 - 0.15
Sandy soil, steep, 7%	0.15 - 0.20
Heavy soil, flat, 2%	0.13 - 0.17
Heavy soil, average, 2-7%	0.18 - 0.25
Heavy soil, steep, 7%	0.25 - 0.35
Streets:	
Asphaltic	0.70 - 0.95
Concrete	0.80 - 0.95
Brick	0.70 - 0.85
Drives and walks	0.75 - 0.85
Roofs:	0.75 - 0.95

Frequency of Floods in California" published in June, 1977 by the U.S. Department of the Interior, Geological Survey.

The Regional Flood-Frequency equations are applicable only to sites within the flood-frequency regions for which they were derived and on streams with virtually natural flows. For example, the equations are not generally applicable to small basins on the floor of the Sacramento and San Joaquin Valleys as the annual peak data which are the basis for the regression analysis were obtained principally in the adjacent mountain and foothill areas. Likewise, the equations are not directly applicable to streams in urban areas affected substantially by urban development. In urban areas the equations may be used to estimate peak discharge values under natural conditions and then by use of the techniques described in the publication or HDS No. 2, adjust the discharge values to compensate for urbanization. Further limitations on the use of USGS Regional Flood-Frequency equations are:

Region	Drainage Area (A) mi^2	Mean Annual Precip (P) in	Altitude Index (H) 1000 ft
(1)North Coast	0.2-3000	19-104	0.2-5.7
Northeast	0.2-25	all	all
Sierra	0.2-9000	7-85	0.1-9.7
Central Coast	0.2-4000	8-52	0.1-2.4
South Coast	0.2-600	7-40	all
(2)South Lahontan-Colorado Desert	0.2-90	all	all

Notes:
(1) In the North Coast region use a minimum value of 1 for altitude index (H)
(2) Use upper limit of 25 square miles

A method for directly estimating design discharges for some gaged and ungaged streams is also provided in HDS No. 2. The

APPENDIX B
Support Documents for Hydraulic Calculations

This page intentionally left blank.

TETRA TECH EC,INC

JOB TITLE:	Quail Brush Generation Project	CLIENT: Cogentrix	MADE BY: GPH	DATE:	9/20/2012
SUBJECT:	Preliminary Post-Development Watershed Hydraulic Analysis		CHECKED: SO	JOB # :	106-4346
			APPROVED: WLS	SHEET:	1 of 1

Quail Brush Site - Preliminary Post-Development Hydraulic Analysis:

			Manning's Open Channel Flow Analysis Parameters								Design Parameters		
Central Plant	**Channel Description**	**$Q_{p\text{-}100}$ (cfs)**	**n**	**Slope**	**L, H:1 (ft)**	**R, H:1 (ft)**	**Bot. W (ft)**	**Depth (ft)**	**V (ft/s)**	**Flow Type**	**FB (ft)**	**Depth (ft)**	**Top W (ft)**
C01	Earthen Trapezoidal Channel	17.9	0.030	2.0%	2	2	5.0	0.64	4.5	Supercritical	1.0	2.0	13.0
	Fabricated Concrete Box Culvert		0.013	1.0%	0	0	5.0	0.54	6.7	Supercritical	1.0	2.0	5.0
C01-C04	Earthen Trapezoidal Channel	25.4	0.030	2.0%	2	2	5.0	0.78	5.0	Supercritical	1.0	2.0	13.0
	Fabricated Concrete Box Culvert		0.013	1.0%	0	0	5.0	0.68	7.5	Supercritical	1.0	2.0	5.0
C08 (C05-06)	Earthen Broad-Crest Spillway	12.5	0.030	1.0%	2	2	10.0	0.43	2.7	Subcritical	1.0	1.5	16.0
C01-C08	Riprap Trapezoidal Channel	39.4	0.040	10.0%	2	2	10.0	0.51	7.0	Supercritical	1.0	2.0	18.0
	Tiered Drop Structure/Stilling Basin		0.040	25.0%	2	2	10.0	0.39	9.4	Supercritical	1.0	2.0	18.0
C01-C16	Tiered Drop Structure/Stilling Basin	47.4	0.040	25.0%	2	2	10.0	0.44	10.0	Supercritical	1.0	2.0	18.0
	Riprap Trapezoidal Channel		0.040	10.0%	2	2	10.0	0.57	7.5	Supercritical	1.0	2.0	18.0

South Plant	**Channel Description**	**$Q_{p\text{-}100}$ (cfs)**	**n**	**Slope**	**L, H:1 (ft)**	**R, H:1 (ft)**	**Bot. W (ft)**	**Depth (ft)**	**V (ft/s)**	**Flow Type**	**FB (ft)**	**Depth (ft)**	**Top W (ft)**
S02-S03	Earthen V-Notch Channel	3.1	0.030	1.5%	1	4	0.0	0.67	2.8	Supercritical	0.5	1.5	7.5
S06 (S04-05)	Earthen V-Notch Channel	7.3	0.030	10.0%	4	1	0.0	0.65	6.9	Supercritical	0.5	1.5	7.5
S07 (S02-03)	Earthen V-Notch Channel	5.8	0.030	10.0%	1	4	0.0	0.60	6.5	Supercritical	0.5	1.5	7.5
S02-S07	Earthen Broad-Crest Spillway	13.1	0.030	1.0%	2	2	10.0	0.44	2.7	Subcritical	1.0	1.5	16.0

Perimeter	**Channel Description**	**$Q_{p\text{-}100}$ (cfs)**	**n**	**Slope**	**L, H:1 (ft)**	**R, H:1 (ft)**	**Bot. W (ft)**	**Depth (ft)**	**V (ft/s)**	**Flow Type**	**FB (ft)**	**Depth (ft)**	**Top W (ft)**
C01 (1/5 reduced)	Earthen V-Notch Slope Cut-off Ditch	3.6	0.030	25.0%	2	2	0.0	0.46	8.6	Supercritical	0.5	1.5	6.0
C12 (1/3 reduced)	Earthen V-Notch Slope Cut-off Ditch	3.4	0.030	20.0%	2	2	0.0	0.47	7.8	Supercritical	0.5	1.5	6.0
			0.030	10.0%	2	2	0.0	0.53	6.0	Supercritical	0.5	1.5	6.0
S01 (1/12 reduced)	Earthen V-Notch Slope Cut-off Ditch	3.2	0.030	20.0%	2	2	0.0	0.46	7.7	Supercritical	0.5	1.5	6.0
S09 (2/3 reduced)	Earthen V-Notch Slope Cut-off Ditch	7.7	0.030	10.0%	2	2	0.0	0.72	7.4	Supercritical	0.5	1.5	6.0

			Manning's Circular Channel Flow Analysis Parameters							
Storm Drains	**Pipe Description**	**$Q_{p\text{-}100}$ (cfs)**	**n**	**S**	**Dia. (ft)**	**Depth (ft)**	**V (ft/s)**	**Capacity (cfs**	**FS**	**Flow Type**
C05	Smooth HDPE	5.1	0.013	1.0%	2	0.65	5.8	22.6	4.4	Supercritical
C06	Smooth HDPE	5.3	0.013	1.0%	2	0.66	5.9	22.6	4.3	Supercritical
C05-C06	Smooth HDPE	10.4	0.013	1.0%	2	0.95	7.1	22.6	2.2	Supercritical
C09	Smooth HDPE	3.8	0.013	1.0%	2	0.62	5.5	10.5	2.8	Supercritical
S04	Smooth HDPE	5.1	0.013	1.0%	2	0.65	5.8	22.6	4.5	Supercritical

Culverts	**Pipe Description**	**$Q_{p\text{-}100}$ (cfs)**	**n**	**S**	**Dia. (ft)**	**Depth (ft)**	**V (ft/s)**	**Capacity (cfs**	**FS**	**Flow Type**
S06 (S04-05)	Corrugated Metal Pipe (CMP)	7.3	0.024	5.0%	2	0.70	7.4	27.4	3.7	Supercritical
S08-S09	Corrugated Metal Pipe (CMP)	12.3	0.024	6.0%	2	0.94	8.5	27.4	2.2	Supercritical

Manning's n Key		
	0.011	**Steel**
	0.013	**Concrete, Cast-Iron or Smooth HDPE/PVC**
	0.024	**Corrugated Metal Pipe (CMP), Corrugated HDPE/PVC**
	0.030	**Clean Natural Channel or Rough Channel w/ Grass**
	0.040	**Rough Rocks or Rip-Rap**
	0.050	**Stony Natural Stream or Very Rough Channel w/ Grass**

APPENDIX C
San Diego Regional Standard Drawings

This page intentionally left blank.

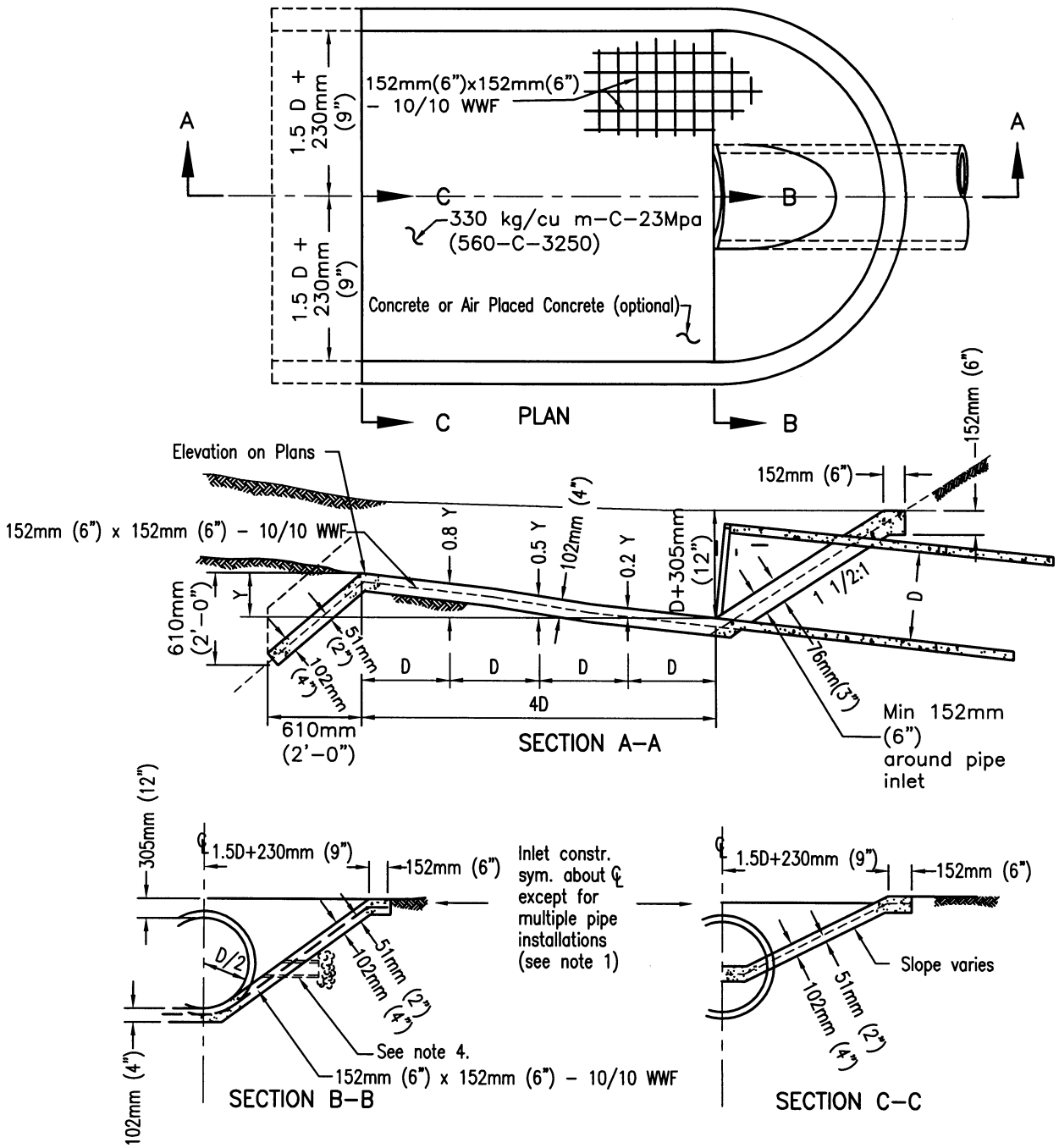

NOTES

1. When more than one pipe is used the profile view shown shall hold for the distance across across all pipe openings. Section A-A and B-B shall be from the outermost pipe. The distance between pipes shall be D/2 for round and Span/3 for arch pipe. (305mm (12") minimum).
2. Culvert shall be cut off even with apron surface when required by the Agency.
3. Use inlet apron only where a flared and section can not be utilized.
4. Place weep holes when required by the Agency.

LEGEND ON PLANS

Revision	By	Approved	Date
ORIGINAL		Kercheval	12/75
Add Metric		T. Stanton	03/03
Reformatted		T. Stanton	04/06

SAN DIEGO REGIONAL STANDARD DRAWING

INLET APRON FOR CULVERTS UP TO 1050mm (42") DIAMETER

RECOMMENDED BY THE SAN DIEGO REGIONAL STANDARDS COMMITTEE

T. Stanton 3/01/2003

Chairperson R.C.E. 19246 Date

DRAWING NUMBER **D-39**

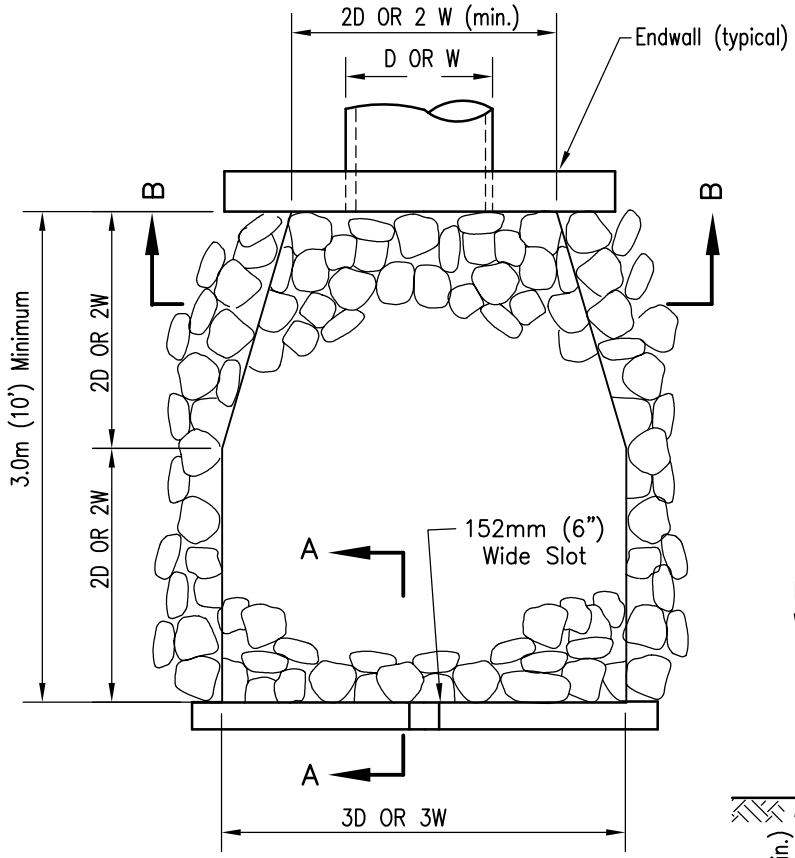

PLAN

Design Velocity m/sec (ft/sec)*	Rock Classification	T (min)
1.8–3 (6–10)	No. 2 Backing	320mm (1.1ft)
3–3.7 (10–12)	220 kg (1/4 ton)	823mm (2.7ft)
3.7–4.3 (12–14)	450 kg (1/2 ton)	1.1m (3.5ft)
4.3–4.9 (14–16)	900 kg (1 ton)	1.3m (4.4ft)
4.9–5.5 (16–18)	1.8 tonne (2 ton)	1.6m (5.4ft)

*over 5.5 mps (18 fps) requires special design

D = Pipe Diameter
W = Bottom Width of Channel

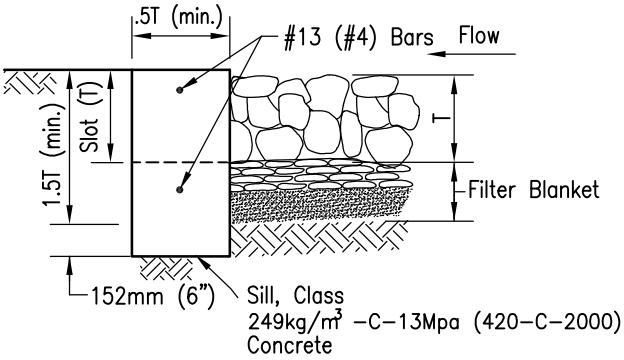

SECTION A–A

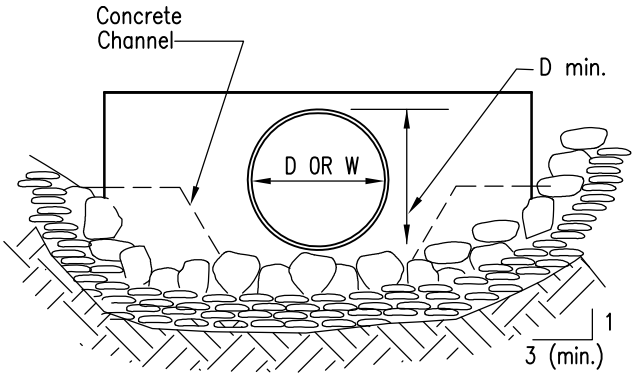

SECTION B–B

NOTES

1. Plans shall specify:
   A) Rock Class and thickness (T).
   B) Filter material, number of layers and thickness.
2. Rip rap shall be either quarry stone or broken concrete (if shown on the plans.) Cobbles are not acceptable.
3. Rip rap shall be placed over filter blanket which may be either granular material or filter fabric (woven filter slit film fabric shall not be used).
4. See Regional Supplement Amendments for selection of filter blanket.
5. Rip rap energy dissipators shall be designated as either Type 1 or Type 2. Type 1 shall be with concrete sill; Type 2 shall be without sill.

Revision	By	Approved	Date
ORIGINAL		Kercheval	12/75
Add Metric		T. Stanton	03/03
Add Rip Rap Table		S. Brady	04/06
Edited		T. Stanton	02/09

SAN DIEGO REGIONAL STANDARD DRAWING

RIP RAP
ENERGY DISSIPATER

RECOMMENDED BY THE SAN DIEGO REGIONAL STANDARDS COMMITTEE

T. Stanton 04/27/2006

Chairperson R.C.E. 19246 Date

DRAWING NUMBER D–40

August 2009

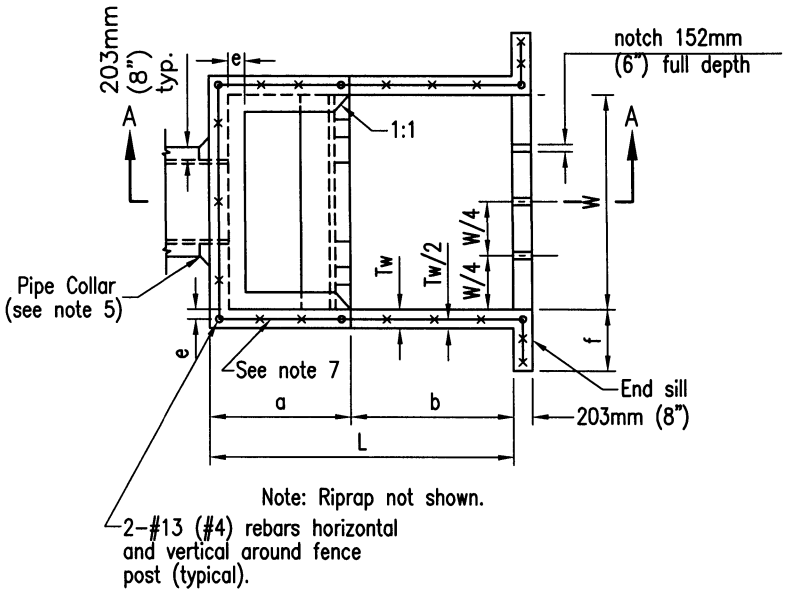

PLAN

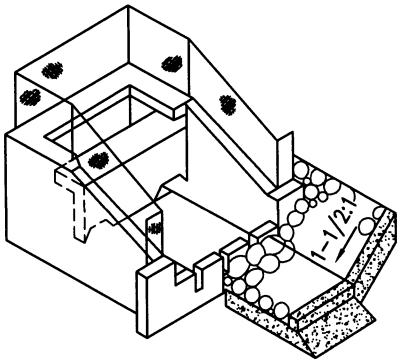

PICTORIAL VIEW

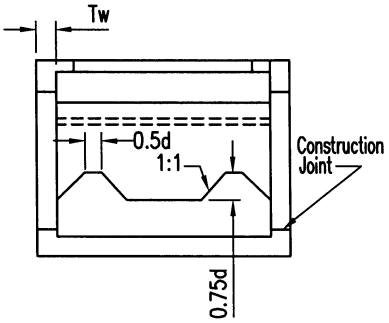

SECTION B–B

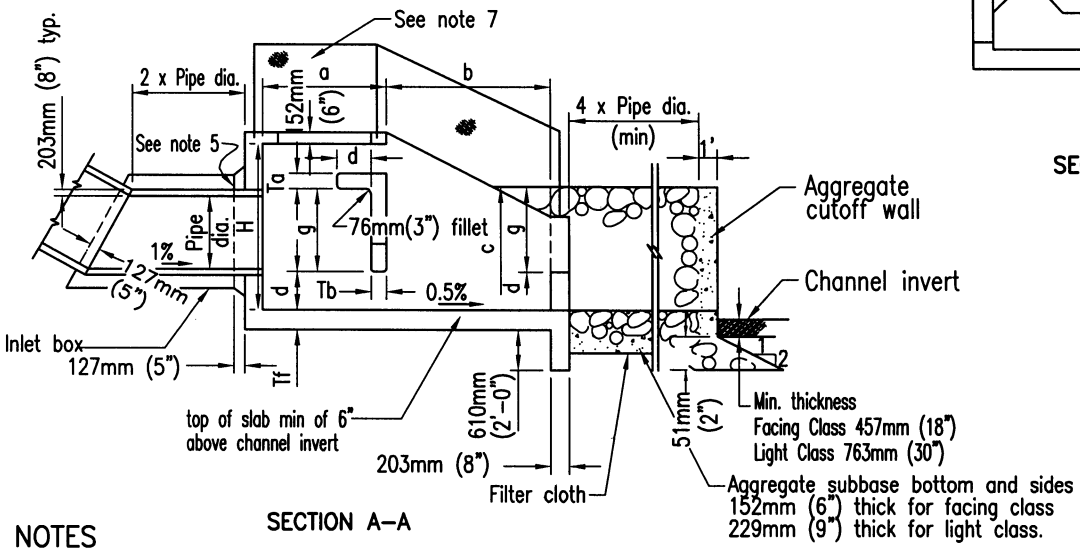

SECTION A–A

NOTES

1. Design
   Equivalent Fluid Pressure (Earth Loading)= 961 kg/cu m (60 p.c.f.) Maximum Outlet velocity = 10.7m (35')/s
2. Concrete shall be 332 kg/M^3–C–22Mpa (560–C–3250)
3. Reinforcing shall conform to ASTM designation A615 and may be grade 40 or 60. Reinforcing shall be placed with 51mm (2") clear concrete cover unless noted otherwise. Splices shall not be permitted except as indicated on the plans.
4. For pipe grades not exceeding 20%, inlet box may be omitted.
5. If inlet box is omitted, construct pipe collar as shown.
6. Unless noted otherwise, all reinforcing bar bends shall be fabricated with standard hooks.
7. Five foot high chain link fencing, embed post 18" deep in walls and encase with class B mortar.
8. In Sandy and Silty soil:
   a) Riprap and aggregate base cutoff wall required at the end of rock apron.
   b) Filter cloth (Polyfilter X or equivalent) shall be installed on native soil base, minimum of 305mm (1 ft.) overlaps at joints.
9. Rip rap and subbase classification shall be as shown on plans.

FOR DIMENSIONS, SEE D–41B.

Revision	By	Approved	Date
ORIGINAL		Kercheval	12/75
Add Metric		T. Stanton	03/03
Reformatted		T. Stanton	04/06

SAN DIEGO REGIONAL STANDARD DRAWING

CONCRETE ENERGY DISSIPATOR

RECOMMENDED BY THE SAN DIEGO REGIONAL STANDARDS COMMITTEE

T. Stanton 3/01/2003

Chairperson R.C.E. 19246 Date

DRAWING NUMBER **D-41A**

SEE SDD-100

METRIC DIMENSIONS TABLE, FOR STRUCTURE DETAILS SEE D-41A.

Pipe Dia	457mm	610mm	9.14m	11.0m	12.80m	14.63m	16.46m	18.29m	21.95m
Area (sq. m)	.164	.292	.456	.657	.893	1.17	.1.48	1.82	2.63
Max. Q (cu m/s)	.594	1.08	1.67	2.41	3.26	4.28	5.41	6.68	9.60
W	1.66m	1.80m	2.13m	2.82m	3.20m	3.58m	3.96	4.34	5.03m
H	1.30m	1.60m	1.90m	2.21m	2.44m	2.74m	2.87m	3.28m	3.73m
L	2.24m	2.74m	3.25m	3.76m	4.27m	4.78m	5.28m	5.79m	6.71m
a	991mm	1.19m	1.40m	1.60m	1.83m	1.80m	2.24m	2.44m	2.82m
b	1.24m	1.55m	1.85m	2.16m	2.44m	2.72m	3.05m	3.35m	3.87m
c	711mm	864mm	1.02m	1.17m	1.35m	1.50m	1.65m	1.80m	2.11m
d	279mm	356mm	406mm	482mm	533mm	610mm	660mm	737mm	838mm
e	152mm	152mm	203mm	203mm	254mm	254mm	305mm	305mm	381mm
f	457mm	610mm	762mm	914mm	914mm	914mm	914mm	914mm	914mm
g	635mm	762mm	914mm	1.07m	1.19m	1.35m	1.50m	1.63m	1.88m
Tf	203mm			254mm		305mm			
Tb	178mm			241mm		267mm			
Tw	178mm			241mm		267mm			
Ta	178mm			203mm					

IMPERIAL DIMENSIONS TABLE, FOR STRUCTURE DETAILS SEE D-41A.

Pipe Dia (in)	18	24	30	36	42	48	54	60	72
Area (sq.ft.)	1.77	3.14	4.91	7.07	9.62	12.57	15.90	19.63	28.27
Max. Q (cfs)	21	38	59	85	115	151	191	236	339
W	5'-6"	6'-9"	8'-0"	9'-3"	10'-6"	11'-9"	13'-0"	14'-3"	16'-6"
H	4'-3"	5'-3"	6'-3"	7'-3"	8'-0"	9'-0"	9'-9"	10'-9"	12'-3"
L	7'-4"	9'-0"	10'-8"	12'-4"	14'-0"	15'-8"	17'-4"	19'-0"	22'-0"
a	3'-3"	3'-11"	4'-7"	5'-3"	6'-0"	6'-9"	7'-4"	8'-0"	9'-3"
b	4'-1"	5'-1"	6'-1"	7'-1"	8'-0"	8'-11"	10'-0"	11'-0"	12'-9"
c	2'-4"	2'-10"	3"-4"	3'-10"	4'-5"	4'-11"	5'-5"	5'-11"	6'-11"
d	0'-11"	1'-2"	1'-4"	1'-7"	1'-9"	2'-0"	2'-2"	2'-5"	2'-9"
e	0'-6"	0'-6"	0'-8"	0'-8"	0'-10"	0'-10"	1'-0"	1'-0"	1'-3"
f	1'-6"	2'-0"	2'-6"	3'-0"	3'-0"	3'-0"	3'-0"	3'-0"	3'-0"
g	2'-1"	2'-6"	3'-0"	3'-6"	3'-11"	4'-5"	4'-11"	5'-4"	6'-2"
Tf	8"			10"		12"			
Tb	7"			9 1/2"		10 1/2"			
Tw	7"			9 1/2"		10 1/2"			
Ta	7"			8"					

Revision	By	Approved	Date
ORIGINAL		Kercheval	12/75
Add Metric		T. Stanton	03/03
Reformatted		T. Stanton	04/06

SAN DIEGO REGIONAL STANDARD DRAWING

CONCRETE ENERGY DISSIPATOR

RECOMMENDED BY THE SAN DIEGO REGIONAL STANDARDS COMMITTEE

T. Stanton 3/01/2003

Chairperson R.C.E. 19246 Date

DRAWING NUMBER **D-41B**

SEE SDD-100

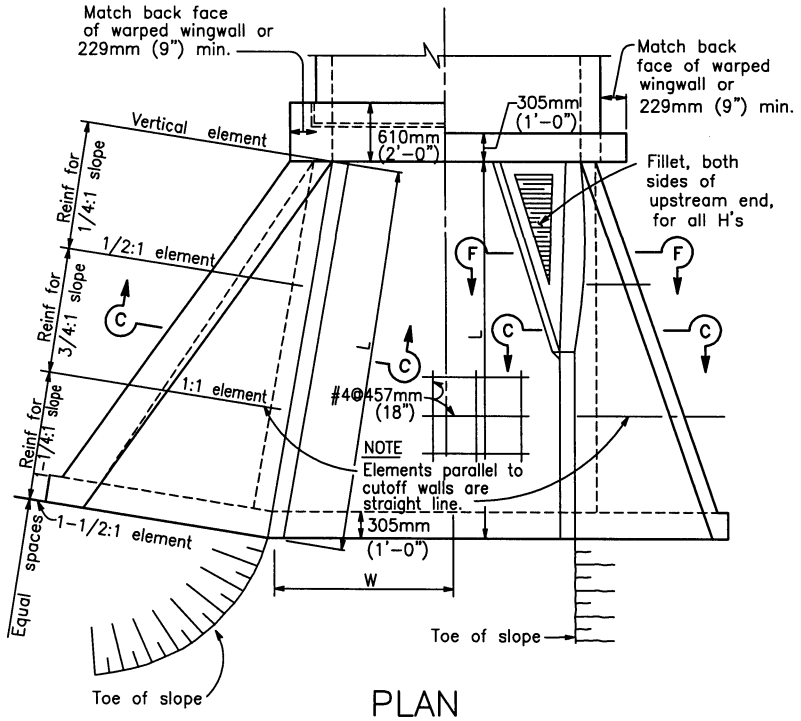

PLAN

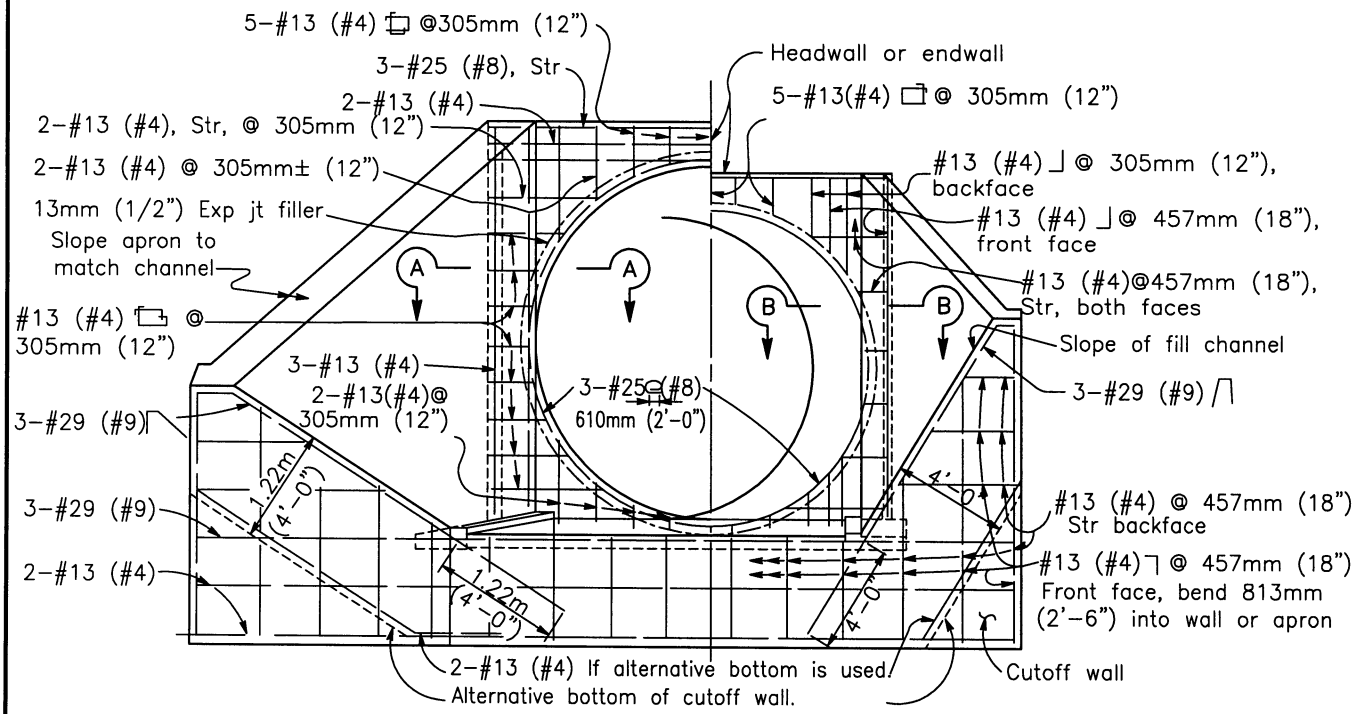

TYPICAL FOR MAXIMUM H >3.05m (10') TYPICAL FOR MAXIMUM H< 3.05m (10')

END ELEVATION

If at upstream end, fillet is not shown

Revision	By	Approved	Date
ORIGINAL		Kercheval	12/75
Add Metric		T. Stanton	03/03
Reformatted		T. Stanton	04/06

SAN DIEGO REGIONAL STANDARD DRAWING

PIPE CULVERT - HEADWALLS, ENDWALLS & WARPED WINGWALLS

RECOMMENDED BY THE SAN DIEGO REGIONAL STANDARDS COMMITTEE

T. Stanton 3/01/2003

Chairperson R.C.E. 19246 Date

DRAWING NUMBER **D-44A**

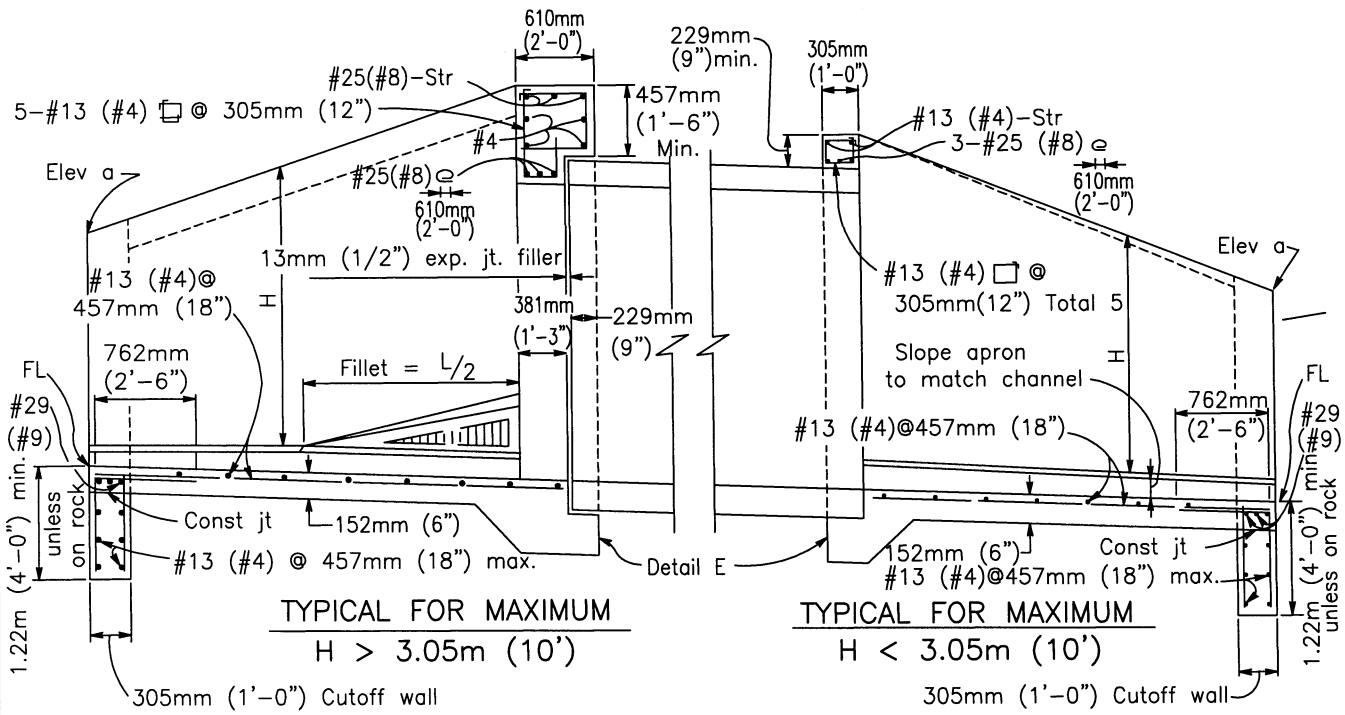

PART LONGITUDINAL SECTION

NOTE

RCP shown. Metal pipe similar except eliminate the expansion joint and use hook bolts @ 483mm(19")± spacing. Size and length provided by manufacturer.

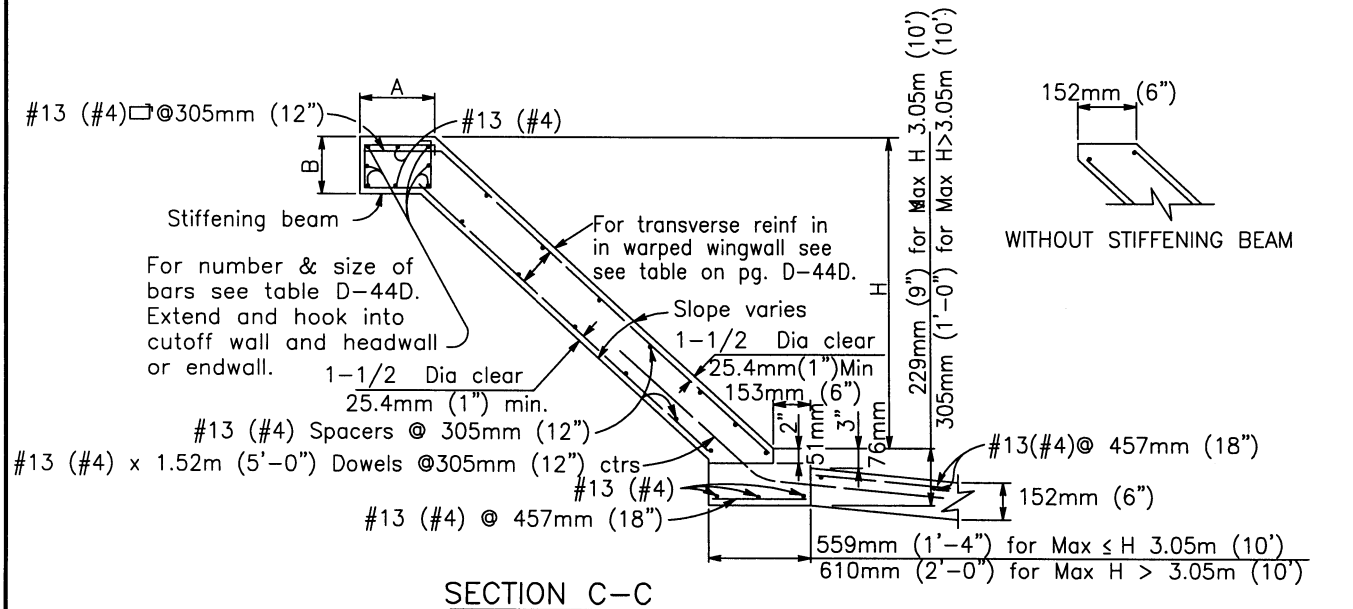

SECTION C-C

Where abrasion is anticipated, increase apron thickness to 178mm (7") minimum to provide 51mm (2") minimum reinforcement coverage.

Revision	By	Approved	Date
ORIGINAL		Kercheval	12/75
Add Metric		T. Stanton	03/03
Reformatted		T. Stanton	04/06

SAN DIEGO REGIONAL STANDARD DRAWING

PIPE CULVERT - HEADWALLS, ENDWALLS & WARPED WINGWALLS

RECOMMENDED BY THE SAN DIEGO REGIONAL STANDARDS COMMITTEE

T. Stanton 3/01/2003

Chairperson R.C.E. 19246 Date

DRAWING NUMBER **D-44B**

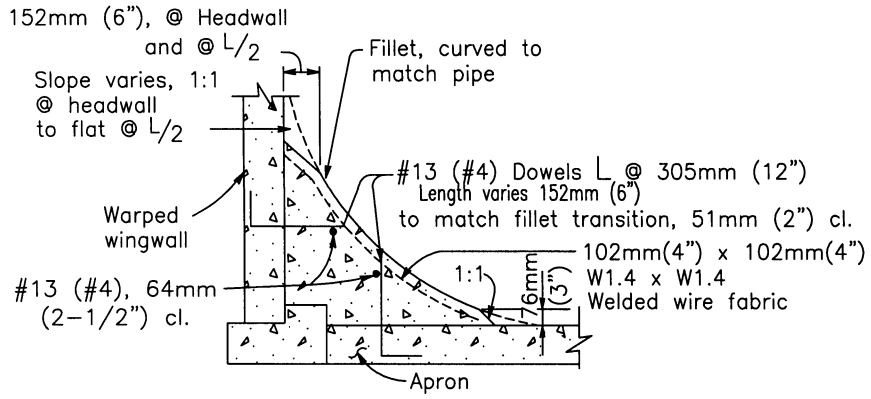

SECTION F-F

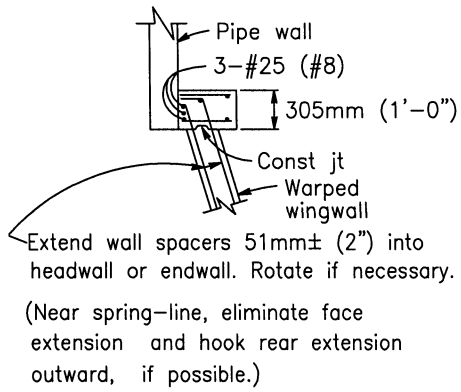

SECTION B-B

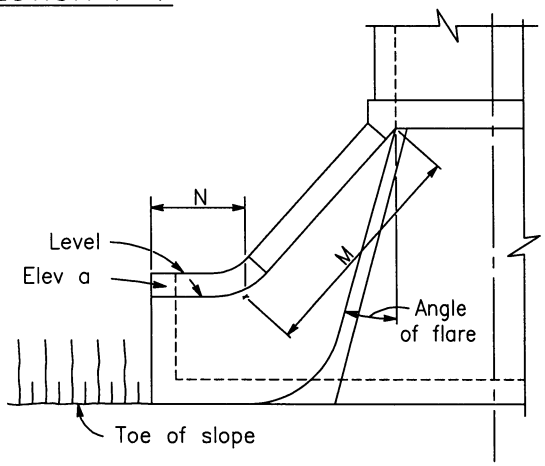

ALTERNATIVE WARPED WINGWALL

Use where additional protection to toe of embankment is required. If at upstream end, fillet is not shown.

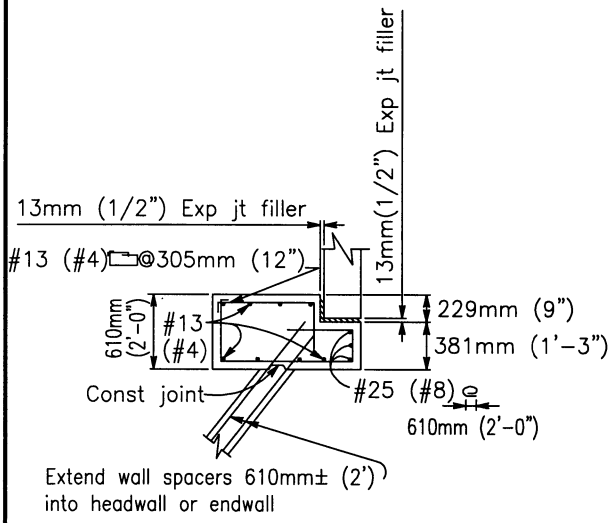

SECTION A-A

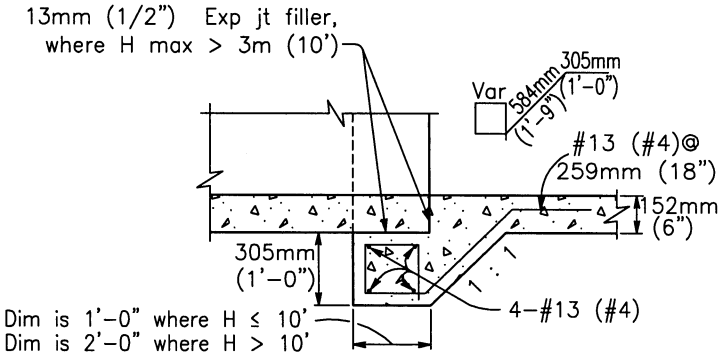

DETAIL E

Revision	By	Approved	Date
ORIGINAL		Kercheval	12/75
Add Metric		T. Stanton	03/03
Reformatted		T. Stanton	04/06

SAN DIEGO REGIONAL STANDARD DRAWING

PIPE CULVERT - HEADWALLS, ENDWALLS & WARPED WINGWALLS

RECOMMENDED BY THE SAN DIEGO REGIONAL STANDARDS COMMITTEE

T. Stanton 3/10/2003

Chairperson R.C.E. 19246 Date

DRAWING NUMBER **D-44C**

WARPED WINGWALLS – IMPERIAL (All measurements in Feet and/or Inches unless otherwise noted)

WALL DIMENSIONS AND REINFORCING

Element Slope	H	8'or less	10'	12'	14'	16'	18'	20'
1/4:1	Front face reinf	#4@12	#4@ 7	#5@ 7	#5@ 5	#6@ 6	#7@ 7	#7@ 6
	Rear face reinf	#4@12	#4@12	#4@12	#4@12	#4@12	#4@12	#4@12
3/4:1	Front face reinf	#4@12	#4@12	#4@12	#4@12	#4@10	#4@ 8	#4@ 6
	Rear face reinf	#4@12	#4@12	#4@12	#4@10	#4@ 7	#4@ 6	#5@ 8
1–1/4:1	Front face reinf	#4@12	#4@12	#4@12	#4@12	#4@12	#4@12	#4@12
	Rear face reinf	#4@ 8	#4@ 8	#4@ 5	#5@ 6	#6@ 7	#6@ 6	#7@ 6
D at Cutoff Wall		6"	6"	6"	7–1/2"	8"	9–1/2"	11"
D at Culvert		6"	6"	6"	8"	9–1/2"	11"	1'–1"

STIFFENING BEAM DIMENSIONS AND REINFORCING

H max \ L	12'	14'	16'	18'	20'	25'	30'	35'	40' or more
6'	No beam. Place 2–#6 in each face along top of wall.								
8'									
10'				A= 1'–0"					
12'				B= 9"					
14'			Total 6–#6			A= 1'–6"			
16'					B= 1'–0"			A= 1'–10"	
18'				Total 6–#7			B=1'–0"		A=2'–0"
20'						Total 6–#8		B= 1'–6"	
							Total 8–#9		

WARPED WINGWALLS – METRIC (All measurements in Millimeters unless otherwise noted)

WALL DIMENSIONS AND REINFORCING

Element Slope	H	2.44m or less	3.05m	3.66m	4.27	4.88m	5.59m	6.10m
1/4:1	Front face reinf	#13@305	#13@178	#16@178	#16@127	#19@152	#22@178	#22@152
	Rear face reinf	#13@305	#13@305	#13@305	#13@305	#13@305	#13@305	#13@305
3/4:1	Front face reinf	#13@305	#13@305	#13@305	#13@305	#13@254	#13@203	#13@152
	Rear face reinf	#13@305	#13@305	#13@305	#13@254	#13@178	#13@152	#16@203
1–1/4:1	Front face reinf	#13@305	#13@305	#13@305	#13@305	#13@305	#13@305	#13@305
	Rear face reinf	#13@203	#13@203	#13@127	#16@152	#19@178	#19@152	#22@152
D at Cutoff Wall		152	152	152	191	203	241	279mm
D at Culvert		152	152	152	203	241	279	330

STIFFENING BEAM DIMENSIONS AND REINFORCING

H max \ L	3.66m	3.27m	4.88m	5.49m	6.10m	7.62m	9.14m	10.7m	12m or more
1.83m	No beam. Place 2–#13 in each face along top of wall.								
2.43m									
3.05m				A= 305					
3.66m				B= 229					
4.27m			Total 6–#19			A= 457			
4.88m					B= 305			A= 559	
5.49m				Total 6–#22			B=305		A=610
6.10m						Total 6–#25		B= 457	
							Total 8–#29		

NOTES:

Walls designed for 610mm (2') surcharge; earth density = 55kg / 0.029 cu m (120 # / cu. ft.); equivalent fluid pressure = 16.4kg / cu m (36 #/cu. ft.) Vary D of warped wall uniformly from that at cutoff wall to that at culvert, for maximum H > 3.65m (12'). Dimensions L, W, H, M.

Revision	By	Approved	Date
ORIGINAL		Kercheval	12/75
Add Metric		T. Stanton	03/03
Reformatted	T. Stanton	T. Stanton	04/06

SAN DIEGO REGIONAL STANDARD DRAWING

PIPE CULVERT - HEADWALLS, ENDWALLS & WARPED WINGWALLS

RECOMMENDED BY THE SAN DIEGO REGIONAL STANDARDS COMMITTEE

Chairperson R.C.E. 19246 Date 3/01/2003

DRAWING NUMBER D-44D

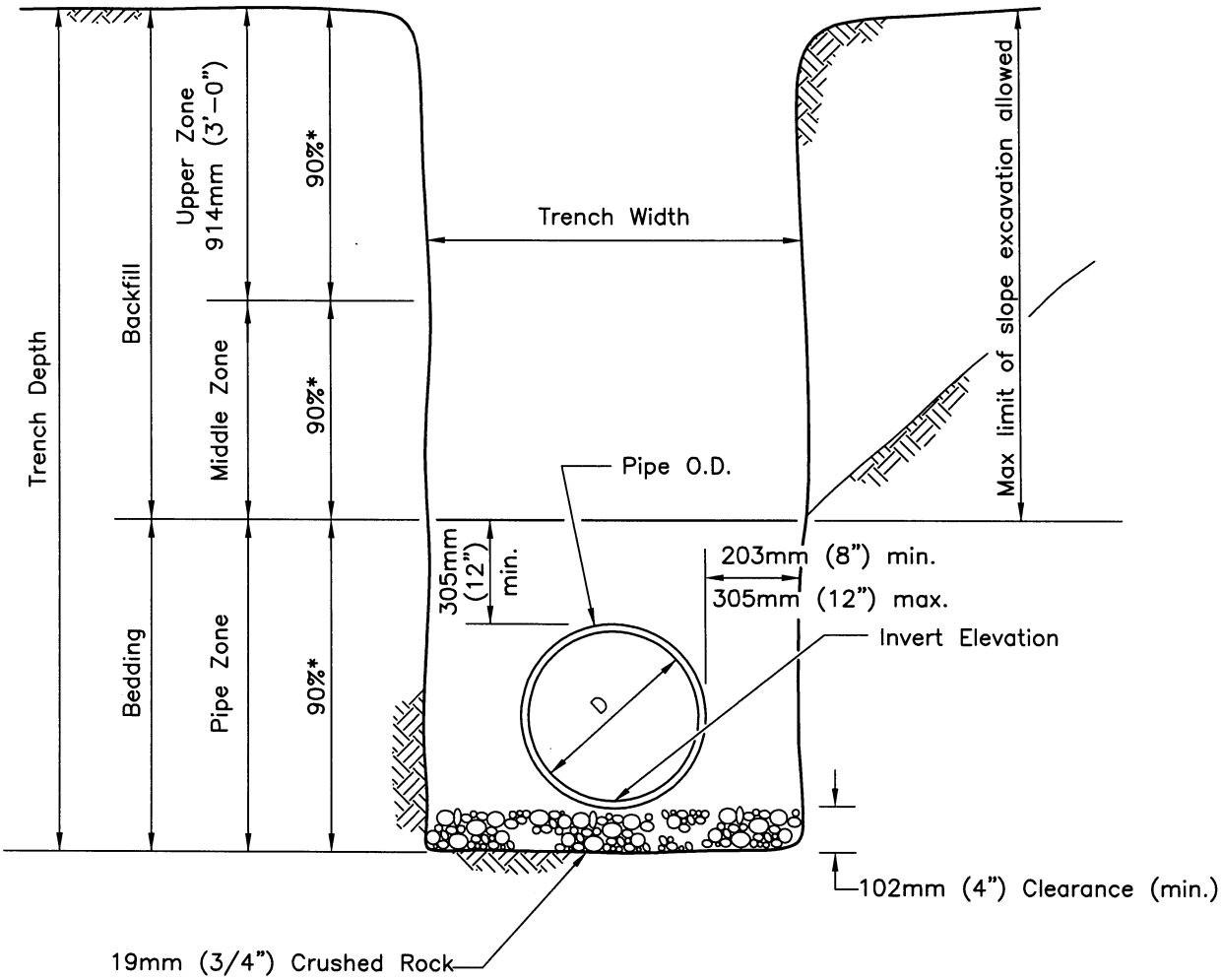

SECTION

NOTES:

1. For trenching on improved streets see Standard Drawing G-24 or G-25 for resurfacing details.
2. (*) indicates minimum relative compaction.

Revision	By	Approved	Date
ORIGINAL		Parkinson	2/95
Add Metric		T. Stanton	03/03
Reformatted		T. Stanton	04/06

SAN DIEGO REGIONAL STANDARD DRAWING

PIPE BEDDING AND TRENCH BACKFILL FOR STORM DRAINS

RECOMMENDED BY THE SAN DIEGO REGIONAL STANDARDS COMMITTEE

T. Stanton 3/01/2003

Chairperson R.C.E. 19246 Date

DRAWING NUMBER **D-60**

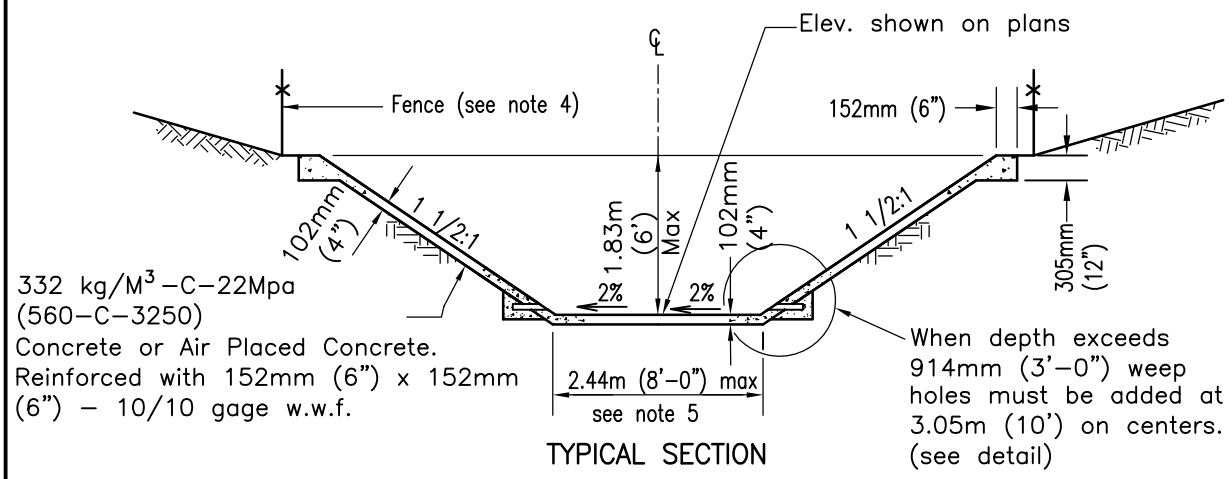

TYPICAL SECTION

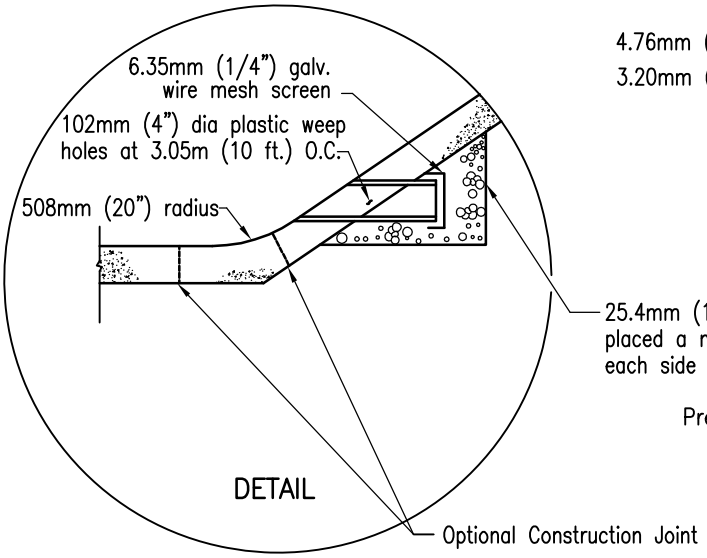

DETAIL

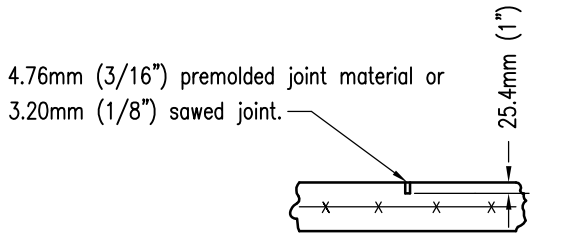

WEAKENED PLANE JOINT

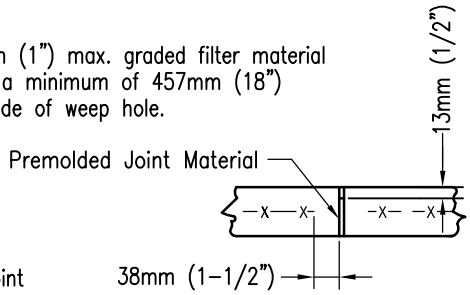

EXPANSION JOINT

NOTES

1. A.C. or clay pipe may be substituted for plastic pipe at weep holes.
2. Weakened plane joints shall be placed every 3.66m (12') to 4.57m (15'). Expansion joints shall be placed at all changes of section and at ends of curves.
3. Cutoff walls shall be constructed at each end of the channel along the full width of section. See Standard Drawing D–72.
4. Chainlink fence shall be as required by Agency.
5. For bottom widths greater than 2.44m (8 feet) see Standard Drawing D–71.
6. Reinforcement shown is minimum.

LEGEND ON PLANS

Revision	By	Approved	Date
ORIGINAL		Kercheval	12/75
Add Metric		T. Stanton	03/03
Reformatted		T. Stanton	04/06

SAN DIEGO REGIONAL STANDARD DRAWING

MINOR DRAINAGE CHANNEL

RECOMMENDED BY THE SAN DIEGO REGIONAL STANDARDS COMMITTEE

T. Stanton 3/10/2003

Chairperson R.C.E. 19246 Date

DRAWING NUMBER D–70

August 2009

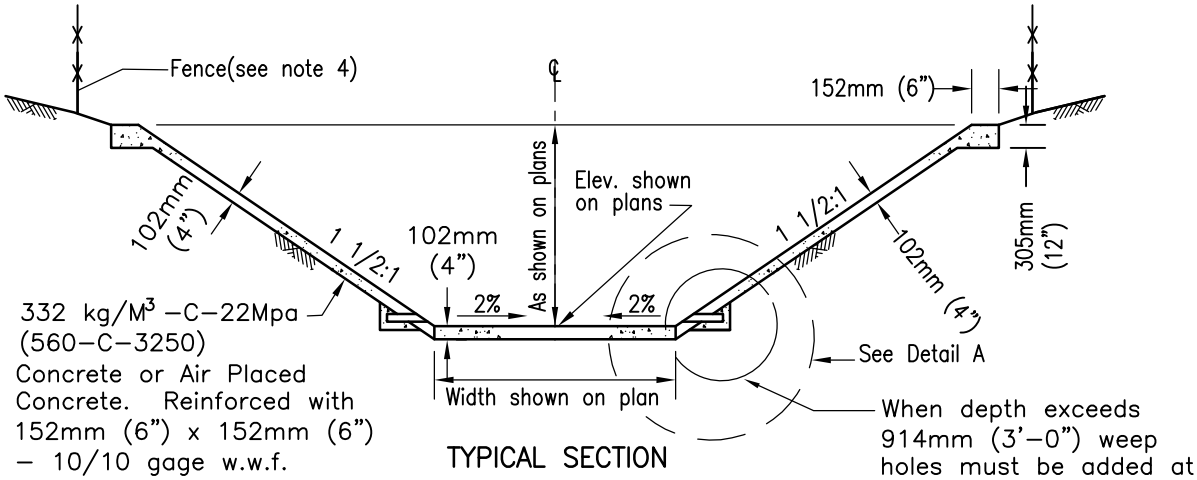

TYPICAL SECTION

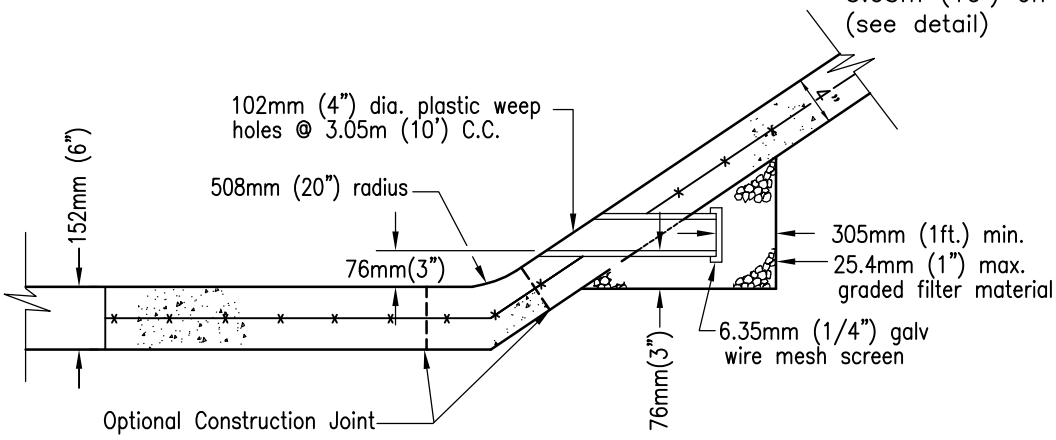

DETAIL A

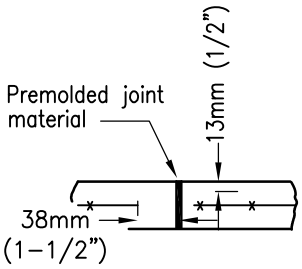

EXPANSION JOINT

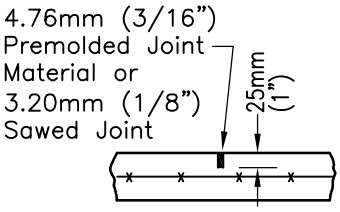

WEAKENED PLANE JOINT

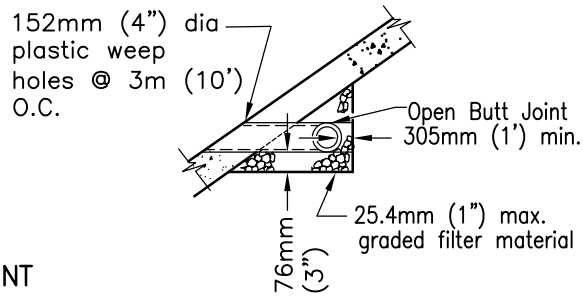

ALTERNATE CONTINUOUS DRAIN

NOTES

1. A.C. or clay pipe may be substituted for plastic pipe at weep holes.
2. Weakened plane joints shall be placed every 3.66m (12') to 4.57m (15'). Expansion joints shall be placed at all changes of section and at ends of curves.
3. Cutoff walls shall be constructed at each end of the channel along the full width of section. See Standard Drawing D–72.
4. Chainlink fence shall be as required by Agency.
5. Reinforcement shown is minimum.

LEGEND ON PLANS

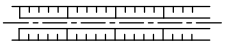

Revision	By	Approved	Date
ORIGINAL		Kercheval	12/75
Add Metric		T. Stanton	03/03
Reviewed		T. Stanton	04/06

SAN DIEGO REGIONAL STANDARD DRAWING

MAJOR DRAINAGE CHANNEL

RECOMMENDED BY THE SAN DIEGO REGIONAL STANDARDS COMMITTEE

T. Stanton 3/01/2003

Chairperson R.C.E. 19246 Date

DRAWING NUMBER D–71

August 2009

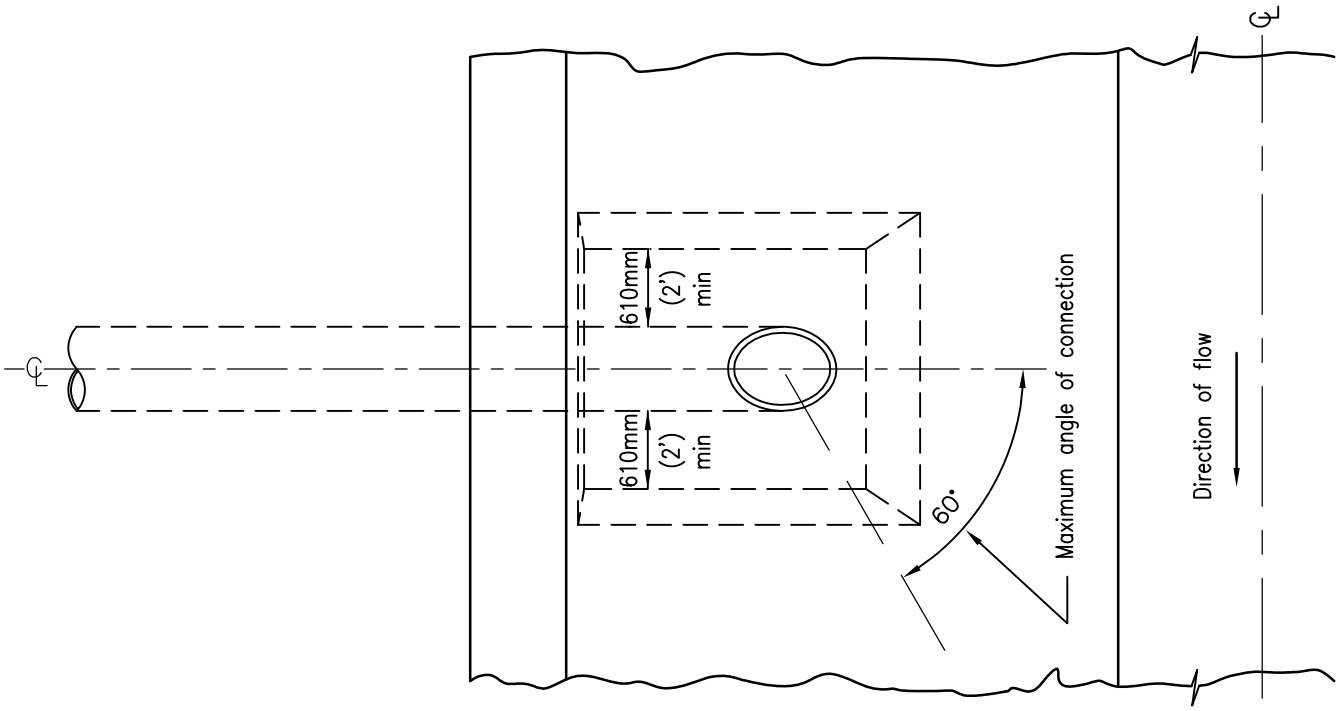

PLAN

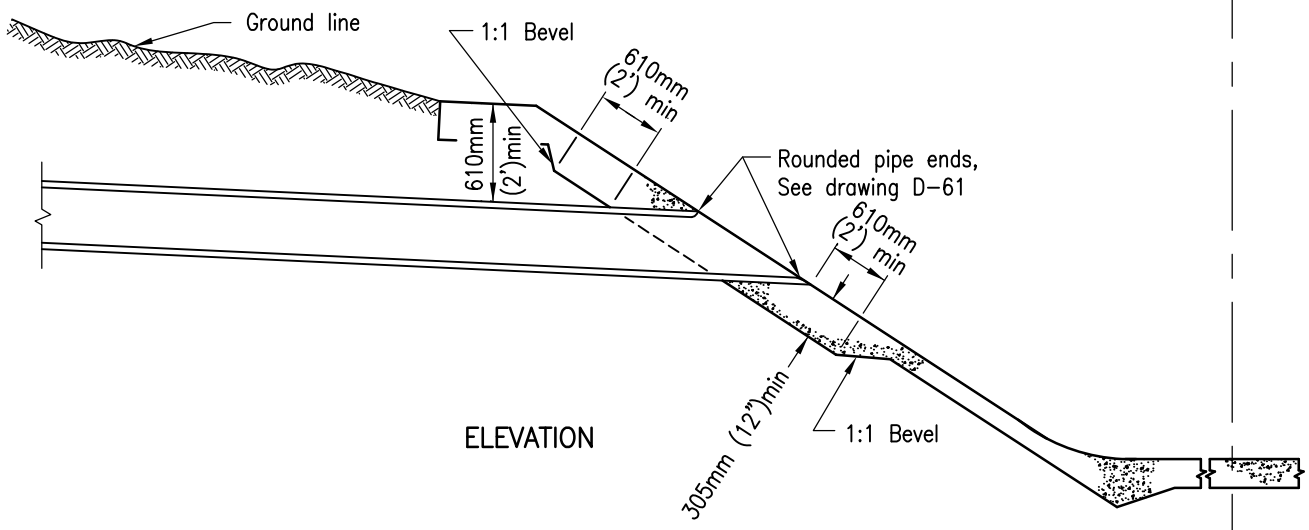

ELEVATION

NOTES:

1. Concrete shall be 332 kg/M^3 –C–22Mpa (560–C–3250).
2. Pipe shall connect to channel as high as possible.
3. The maximum angle of connection is 60° downstream. In no case shall a pipe angle upstream.

LEGEND ON PLANS

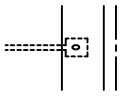

Revision	By	Approved	Date
ORIGINAL		Kercheval	12/75
Add Metric		T. Stanton	03/03
Reviewed		T. Stanton	04/06

SAN DIEGO REGIONAL STANDARD DRAWING

PIPE TO CHANNEL CONNECTION

RECOMMENDED BY THE SAN DIEGO REGIONAL STANDARDS COMMITTEE

T. Stanton 3/01/2003

Chairperson R.C.E. 19246 Date

DRAWING NUMBER D–73

August 2009

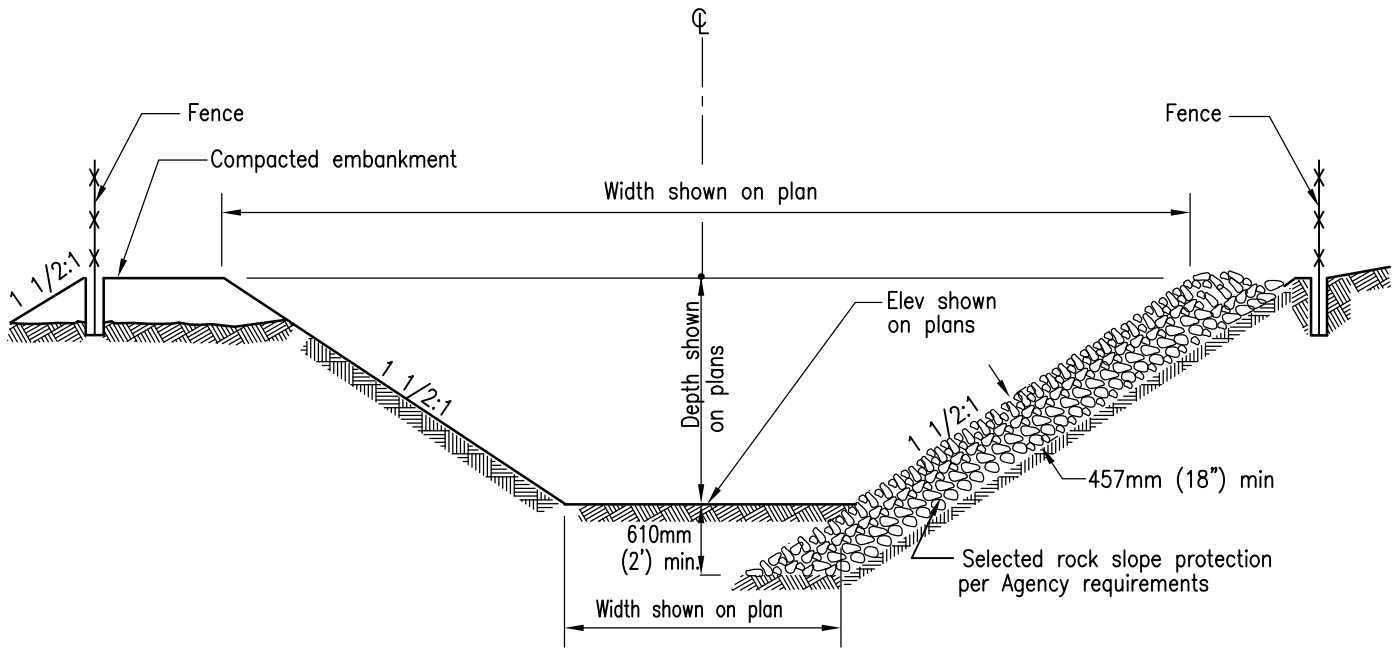

SECTION

NOTE:

The following shall be as required by Agency:

a) Low flow channel
b) Filter blanket
c) Cutoff wall
d) Fence

LEGEND ON PLANS

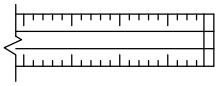

Revision	By	Approved	Date
ORIGINAL		Kercheval	12/75
Add Metric		T. Stanton	03/03
Reviewed		T. Stanton	04/06

SAN DIEGO REGIONAL STANDARD DRAWING

GRADED EARTH CHANNEL

RECOMMENDED BY THE SAN DIEGO REGIONAL STANDARDS COMMITTEE

T. Stanton 3/01/2003

Chairperson R.C.E. 19246 Date

DRAWING NUMBER D-74

August 2009

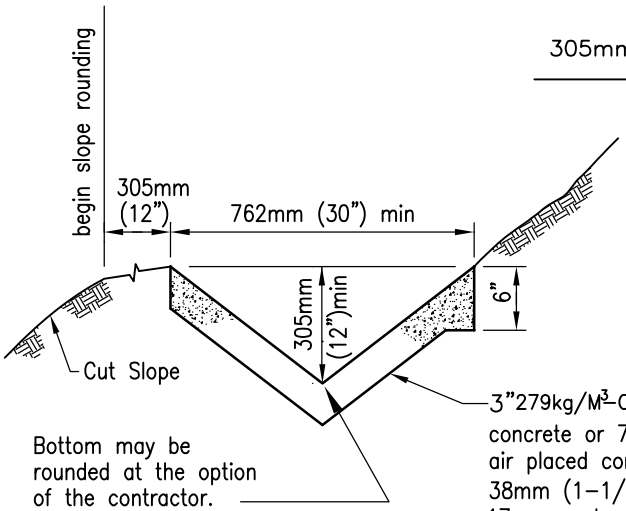

TYPE A

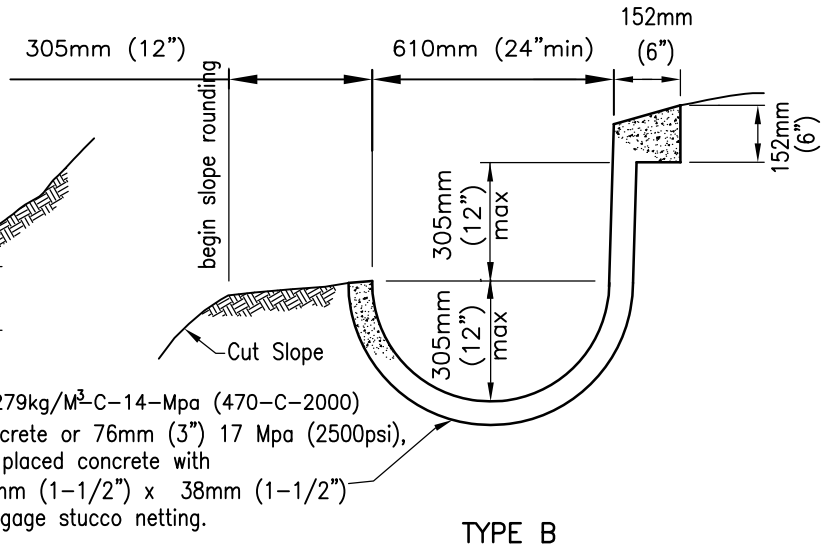

TYPE B

BROW DITCH

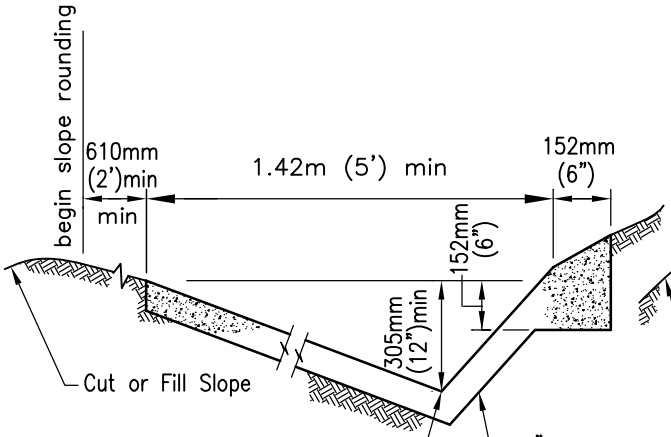

TYPE C

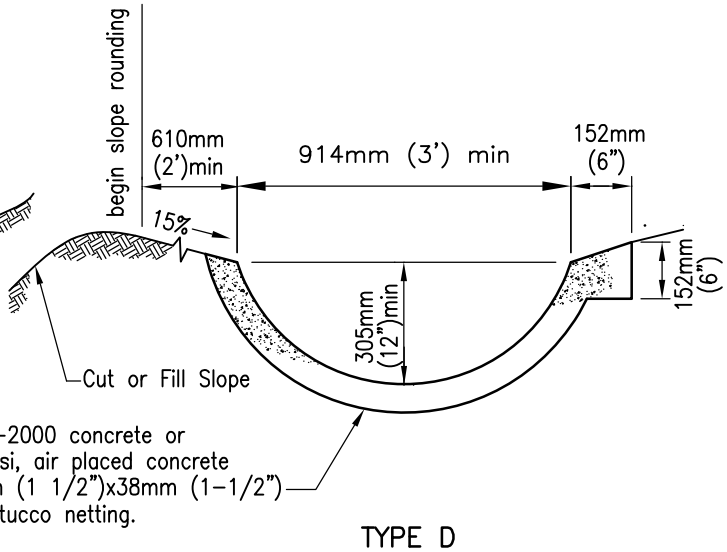

TYPE D

TERRACE DITCH

NOTES

1. Longitudinal slope of lined ditch shall be 2% minimum.
2. Over slope down ditches shall employ 152mm (6") thickened edge section at both sides of ditch.

LEGEND ON PLANS

Revision	By	Approved	Date
ORIGINAL		Kercheval	12/75
Add Metric		T. Stanton	03/03
Reviewed		T. Stanton	04/06

SAN DIEGO REGIONAL STANDARD DRAWING

DRAINAGE DITCHES

RECOMMENDED BY THE SAN DIEGO REGIONAL STANDARDS COMMITTEE

T. Stanton 3/10/2003

Chairperson R.C.E. 19246 Date

DRAWING NUMBER D-75

August 2009