CH2M HILL
2485 Natomas Park Drive
Suite 600
Sacramento, CA 95833
Tel 916-920-0300
Fax 916-920-8463

California Energy Commssion
DOCKETED
12-AFC-03
TN 70784
MAY 13 2013

May 13, 2013

469784.RB.DI

Mr. Pierre Martinez
California Energy Commission
1516 Ninth Street
Sacramento, CA 95814-5512

Subject: Redondo Beach Energy Project (12-AFC-03)
South Coast Air Quality Management District's Request for Information

Dear Mr. Martinez:

Attached please find the Redondo Beach Energy Project's Response to the South Coast Air Quality Management District (SCAQMD) April 12, 2013 request. This has also been provided to SCAQMD in response to requests for further information needed to complete the engineering evaluation of the RBEP.

One hard copy will be docketed, as well as two USB stick drives containing the air modeling files. Additional copies of the USB drive can be provided upon request.

If you have any questions about this matter, please contact me at (916) 286-0249 or Mr. Jerry Salamy at (916) 286-0207.

Sincerely,

CH2M HILL

Sarah Madams
AFC Project Manager

Attachment
cc: P. Kelly, CEC
S. O'Kane, AES
G. Wheatland, ESH
J. Salamy, CH2M HILL

AES Redondo Beach
690 N. Studebaker Road
Long Beach, CA 90803
tel 562 493 7891
fax 562 493 7320

May 9, 2013

Mr. Mohsen Nazemi, P.E.
Deputy Executive Officer
South Coast Air Quality Management District
21865 Copley Drive
Diamond Bar, CA 91765-4178

Subject: Redondo Beach Energy Project Permit Application (Facility ID# 115536)

Dear Mr. Nazemi:

AES Redondo Beach, LLC (AES) is submitting this letter in response to the South Coast Air Quality Management District's (AQMD) April 12, 2013 request for additional information needed to complete the engineering evaluation of the Redondo Beach Energy Project (RBEP). The remainder of this letter presents AES's responses to the requested information.

1) Dispersion Modeling

a) Your response did not address whether a 5-year meteorological dataset was used for RBEP modeling. Please update the dispersion modeling using the most recent meteorological data files transmitted on March 26, 2013.

The AQMD planning staff's preliminary review of the dispersion modeling provided for RBEP confirms the modeling indicates the project's nitrogen dioxide (NO_2) impacts will exceed the Federal 1-Hour NO_2 significant impact level and, therefore, a cumulative impact assessment is needed. The addendum to the air dispersion modeling protocol to address the cumulative impact analysis has not been submitted to the AQMD. Please submit a protocol for the cumulative assessment and, upon approval of the protocol, the modeling analysis which is required to include facilities within a 10 kilometer radius.

Response: The RBEP air quality impact assessment contained in the air permit application used 5-years of meteorological data (compiled by AQMD specifically for use in dispersion modeling analyses) for the period of January 1, 2005 through December 31, 2009 (see page 5.1-19 of the Air Quality section of the Permit Application). These data (AERMET data files for 2005 through 2009) were downloaded directly from the AQMD website after the AQMD reviewed and commented on the RBEP dispersion modeling protocol's proposed use of these meteorological data.

Attachment 1 presents an addendum to AES's air dispersion modeling protocol. This addendum presents revised air dispersion modeling methodology, based on discussions between the AQMD and

AES's consultant (CH2M HILL), and the preliminary modeling results that show RBEP's 1-hour NO_2 significant impact area. The AQMD is expected to provide a list of sources to include in the 1-hour cumulative impact assessment; once received, AES's consultant will develop an emission inventory for these sources using the AQMD's public information request process. When the emission inventory is completed, it will be transmitted to the AQMD for review and approval. Once approved, a cumulative 1-hour NO_2 impact assessment will be completed and submitted within 10 business days.

b) Please remodel all NO_2 impacts with an appropriate ambient NO_2 ratio.

Please revise the construction dispersion modeling performed for California Environmental Quality Act (CEQA) purposes for fugitive dust emissions assuming the fugitive dust emissions are modeled as a ground-level source, with an initial vertical dimension of 1 meter.

Response: Based on the revised air dispersion modeling results presented in the RBEP Air Dispersion Modeling Protocol Addendum (see item b) above), the use of a Tier 3 analysis methodology may not be required to demonstrate compliance with the Federal 1-hour NO_2 standard. However, if a Tier 3 analysis is required, the ambient NO_2 ratio will be initially be set at 0.9 and if additional modeling is warranted, then AES will discuss the use of a site-specific ambient NO_2 ratio with the AQMD.

AQMD, as a responsible agency, is available to the lead agency and project proponent for early consultation on a project to apprise it of applicable rules and regulations, and provides guidance on applicable air quality analysis methodologies or other air quality-related issues.[1] However, the RBEP is not subject to any applicable AQMD rule that would require the modeling of construction fugitive dust emissions as part of an air permit application completeness determination.

Although modeling of construction fugitive dust emissions is not subject to AQMD jurisdiction, the construction fugitive dust area source emissions were remodeled with a release height at ground level (0 meters) and an initial vertical dimension of 1 meter, using the 5-year meteorological dataset provided by the AQMD on March 26, 2013. The results of this analysis are presented in Table AQMD-1, which shows the particulate matter (PM_{10} and $PM_{2.5}$) impacts from construction activities. A USB drive containing the air dispersion modeling files is enclosed. As with the previous fugitive dust modeling, the annual and 24-hour PM_{10} and the annual and 24-hour $PM_{2.5}$ background concentrations exceed the state and Federal ambient air quality standards (AAQS) without addition of the modeled concentrations. As a result, the predicted impacts will be greater than the AAQS. The Permit Application Table 5.1-22 presents a comparison of the maximum expected daily RBEP construction emissions to the AQMD's construction CEQA significance thresholds, showing that RBEP construction emissions do not exceed the AQMD's CEQA significance thresholds for PM_{10} or $PM_{2.5}$ (or any other criteria pollutant). Therefore, RBEP construction is not expected to result in a significant impact. Nevertheless, AES will implement the construction mitigation measures presented in the Permit Application Section 5.1.8.1, and those measures included the California Energy Commission (CEC) license to reduce the offsite construction air quality impacts.

[1] http://www.aqmd.gov/ceqa/faq.html#What is a responsible agency?

TABLE AQMD-1
Maximum Modeled Impacts from RBEP Construction and the Ambient Air Quality Standards

Pollutant	Averaging Period	Maximum Modeled Concentration ($\mu g/m^3$)	Background Concentration* ($\mu g/m^3$)	Total Predicted Concentration ($\mu g/m^3$)	State Standard ($\mu g/m^3$)	Federal Standard ($\mu g/m^3$)
PM_{10}	24-hour	83.2	52	135	50	150
	Annual	20.6	25.6	46.2	20	—
$PM_{2.5}$	24-hour (98th percentile)	18.8	35.3	54.1	—	35
	Annual	4.95	15.5	20.4	12	12

$\mu g/m^3$ = micrograms per cubic meter

*Background concentrations were the highest concentrations monitored during 2008 through 2010, as identified in Permit Application Table 5.1-21.

2) Visibility Analysis – The prevention of significant deterioration (PSD) additional impacts analysis should also consider visibility impacts on Class II areas and impacts as a result of growth associated with the project (i.e., general commercial, residential, and industrial and other growth). Please provide a visibility analysis for Class II areas within 50 kilometers of the project.

Response: RBEP is subject to PSD requirements for nitrogen oxides (NOx), volatile organic compounds (VOC), and greenhouse gases (GHGs)[2]. Per the requirements of 40 Code of Federal Regulations (CFR) 51.116 and AQMD Rule 1703, Federal Major Sources subject to PSD new source review (NSR) must provide the following with respect to Federally-designated Class II areas:

(o) *Additional impact analyses.* The plan shall provide that—

(1) The owner or operator shall provide an analysis of the impairment to visibility, soils, and vegetation that would occur as a result of the source or modification and general commercial, residential, industrial, and other growth associated with the source or modification. The owner or operator need not provide an analysis of the impact on vegetation having no significant commercial or recreational value.

(2) The owner or operator shall provide an analysis of the air quality impact projected for the area as a result of general commercial, residential, industrial, and other growth associated with the source or modification.

As there are no quantitative standards for assessing impairment to Class II visibility, a qualitative assessment was prepared using the Secondary National Ambient Air Quality Standards (secondary standards). The secondary standards, as defined in Clean Air Act (CAA) section 109(b)(2) (42 U.S.C. § 7409[b][2]), must "specify a level of air quality the attainment and maintenance of which in the judgment of the Administrator, based on [the] criteria, is requisite to protect the public welfare from any known or anticipated adverse effects associated with the presence of [the] air pollutant in the

[2] See Permit Application Tables 5.1-17 and 5.1-19.

ambient air." Welfare effects, as defined in CAA section 302(h) (42 U.S.C. § 7602[h]), include, but are not limited to, "effects on soils, water, crops, vegetation, manmade materials, animals, wildlife, weather, visibility and climate, damage to and deterioration of property, and hazards to transportation, as well as effects on economic values and on personal comfort and well-being." No ambient air quality standards exist for VOC, GHG, and particulate matter. The secondary standards established by the U.S. Environmental Protection Agency (EPA) and AQMD are summarized in Table AQMD-2 below:

TABLE AQMD-2
Secondary Standards Applicable to the RBEP

Pollutant	Averaging Period	Secondary Standard
NO_2	Annual	53 ppb

ppb = parts per billion

The area around the RBEP is classified as non-attainment or maintenance for ozone, $PM_{2.5}$, and PM_{10}. AES is proposing to rely on allocated emission offsets credits (ERCs) and Regional Clean Air Incentives Market (RECLAIM) Trading Credits (RTCs) for purposes of meeting the ozone (and ozone precursors), $PM_{2.5}$, and PM_{10} offset requirements. ERCs have been previously evaluated by the AQMD and demonstrated not to result in a threat to compliance with the ozone, $PM_{2.5}$, and PM_{10} secondary standards. The AQMD has also established a method to obtain and utilize ERCs via rulemaking in regulations 1306, 1309, and 1315. In establishing the emission offsets for ozone precursors (NOx and volatile organic compounds [VOC]), direct $PM_{2.5}$ and PM_{10}, and particulate matter precursors (NOx and sulfur dioxide [SO_2]), the AQMD demonstrated that the presence of these pollutant emission offset quantities available in the South Coast Air Basin would not endanger compliance with the secondary standards. Therefore, the AQMD's ERC requirements demonstrate that emission offset credits provided for RBEP's ozone precursors, $PM_{2.5}$, and PM_{10} emissions (and precursors) would not result in impairment to visibility, soils, and vegetation.

To assess RBEP's potential impairment to visibility, soils, or vegetation resulting from increases of NOx, RBEP completed a dispersion modeling analysis and compared the results to the secondary standards. The modeling results demonstrate that the RBEP's emissions would not cause or contribute to an exceedance of the secondary standards for which the AQMD is considered either attainment or unclassified. By demonstrating compliance with these secondary standards, RBEP has shown that its emissions of NOx will not result in impairment to visibility, soils, and vegetation.

Based on the socioeconomic and environmental justice analysis prepared for the Application for Certification, RBEP will not result in general commercial, residential, industrial, or other growth; therefore, this type of ancillary growth is not expected to result in material impacts to air quality or impairment to visibility, soils, and vegetation. The City of Redondo Beach and the general project area is already heavily developed and is adjacent to the Los Angeles metropolitan area. Because of the existing stock of housing and industrial and commercial services and the fact that RBEP will replace existing electrical generation within the western Los Angeles basin, RBEP is not expected to require or

cause any material offsite growth that could impact air quality or impair visibility, soils, or vegetation. During RBEP construction, it is not anticipated that the work force will cause any increase to preexisting housing and services. The limited work force and outside services required for the RBEP's operation once construction is complete also will not materially affect the area. Lastly, by siting RBEP on an existing brownfield power plant site and due to the urban nature of the project area, impacts to visibility, soils, or vegetation are not expected, nor is the project expected to induce growth.

3) GHG BACT Emission Rate Calculations

a) In our meeting on February 21, 2013 to discuss the questions in our letter dated February 8, 2013, you explained that the expected operating profile assumed to derive the emission rate of 1,082 pounds carbon dioxide per megawatt-hour (lbs CO_2/MWh) of gross energy output would result in an estimate of the maximum emission rate. Since this emission rate is based on gross heat rates, please use net heat rates to convert the 1,082 lbs CO_2/MWh gross to lbs CO_2/MWh net.

Response: In our March 15, 2013 letter, we provided revised CO_2 calculations that presented heat rates on a gross basis (Table AQMD-3R). Converting the gross heat rates to net heat rates results in a CO_2 emission rate of 1,125 lbs CO_2/MWh based on an expected annual capacity factor of 20 percent.[3]

b) If the resulting net thermal efficiency exceeds the 1,100 lbs CO_2/MWh net Greenhouse Gases Emissions Performance Standard, how do you propose to meet the standard?

Response: The Greenhouse Gases Emissions Performance Standard[4] (EPS) is applicable to baseload generation. Section 2901b of the EPS regulation defines baseload generation as "electricity generation from a power plant that is designed and intended to provide electricity at an annualized plant capacity factor of at least 60 percent."

In preparing the GHG BACT analysis, AES considered the practical operating range of RBEP, consistent with the Environmental Protection Agency's guidance.[5] AES determined RBEP's expected capacity factor of 20 percent based on an analysis of the power requirements of the western Los Angeles electrical system. Assuming RBPE operates at a 60 percent capacity factor, the resulting CO_2 emission rate is 1,052 lb of CO2/MWh (see Table AQMD-3 below). The reason for the lower CO_2 emission rate at an assumed 60 percent capacity factor is that in order to achieve a 60 percent capacity factor[6], RBEP would need to operate more hours at higher electrical production levels and at higher electrical production levels, RBEP's efficiency increases. Therefore, if RBEP will comply with the GHG Emission

---

[3] Heat rates were converted from a gross basis to a net basis by applying an assumed 3 percent parasitic electrical load. The RBEP Permit Application project description section (page 2-40) noted that the project was expected to have an annual capacity factor of between 15 and 25 percent.

[4] Title 20 of the California Code of Regulations, Division 2, Chapter 11, Article 1, Sections 2900 to 2913

[5] See EPA's January 25, 2013 comment letter on the Los Angeles Department of Water and Power's Scattergood Generating Station Unit 3 Repowering Project

[6] Capacity factor is a function of the actual annual electrical production divided by theoretically possible electrical production

Performance Standard of 1,100 lbs CO_2/MWh in the event it's needed to operate at a 60 percent or greater capacity factor.

TABLE AQMD-2
RBEP GHG Performance at a 60 Percent Capacity Factor

Event	Hours	Heat Rate (Btu- LHV/kWh Net)	Electrical Production (kW - Net)	Annual Electrical Production (kWh – Net)
Start Up (125)	18.8	19,397	2.52	47
Shutdown (125)	19.8	17,542	0.49	10
3x1 at 100% Load	5,000	7,440	492,265	2,461,325,000
2x1 at 100% Load	250	7,413	329,459	82,364,750
2x1 at 100% Load with DB	150	7,683	367,913	55,186,950
Total	**5,439**	**NA**	**NA**	**2,599,587,581**
Capacity Factor		60		
Weighted Annual Average Heat Rate with SU/SD				7,523
Annual Average Heat Rate with SU/SD and 8 Percent Degradation				8,178
Lb of CO2/MWh – Net				1,052
California's EPS - Lb CO2/MWh – Net				1,100

Notes
3x1 = 3 combustion turbines and 1 steam turbine
2x1 = 2 combustion turbines and 1 steam turbine
2x1 at 100% Load with DB = 2 combustion turbines and 1 steam turbine with the duct burners firing at 100 percent
Capacity factor = 2,599,587,581 kWh-net/(492,265 kW-net * 8760 hours)
Table AQMD-2 is based on Table AQMD-3R from AES's March 15, 2013 response letter. The gross heat rates were converted to net heat rates by incorporating an assumed station load of 3 percent.

4) **Application for Oil/Water Separator – In response to Item 8, you submitted Form 400-A and a check for $5,229.18 for an applicat6ion for an oil/water separator. The $5,229.18 apparently included $1,789.12 for a second RECLAIM/Title V facility amendment application. Since Application No. 545065 will serve as the RECLAIM/Title V facility amendment application for the entire project, $1,789.12 will be refunded. To complete the application, please provide a completed Form 400-E-18 – Storage Tanks and emission calculations.**

Response: The RBEP oil/water separator will treat precipitation that falls on lubricant-containing equipment. The proposed oil/water separator is a single-wall aboveground 3,000-gallon horizontal carbon steel tank, measuring 18 feet long with a width and height of 5 feet, rated at 300 gallons per minute. The separator includes a 10-inch inlet and outlet port, six removable covers, one, 3-inch clean-out port, a 2-inch vent port, four, 2-inch drain ports, and a 2-inch inlet and outlet port. The tank will operate at ambient temperatures and pressure. The removable covers and ports will include gaskets to reduce fugitive emissions. The expected annual average precipitation in the project area is

12.02 inches.[7] Based on the areas at RBEP which drain to the oil/water separator, the annual expected oil/water separator throughput is approximately 82,000 gallons. Using a controlled emission factor of 0.2 pounds of VOC per 1,000 gallons of water processed[8], the annual expected VOC emissions would be 16.4 pounds per year. Assuming 25 percent of the annual rainfall occurs within a single month, the maximum monthly throughput of the oil/water separator would be 20,500 gallons and the monthly VOC emissions would be 4.1 pounds or 0.1 pounds per day. Attachment 2 contains the requested Form 400-E-18 for the oil/water separator and a Figure 1 showing a typical 3,000-gallon oil/water separator.

If you require further information, please don't hesitate contacting me at 562-493-7840.

Sincerely,

Stephen O'Kane
Manager
AES Redondo Beach, LLC
Attachments

cc: Sarah Madams/CH2M HILL
Jennifer Didlo/AES
Gregg Wheatland/ESH
Jerry Salamy/CH2M HILL
Patricia Kelly/CEC

ES050913033622SAC/469784/RBEP_SCAQMD_4-12-13_Completeness_Response.docx

[7] Western Regional Climate Center. 2012. Los Angeles WSO Airport General Climate Survey. http://www.wrcc.dri.edu/summary/Climsmsca.html

[8] Environmental Protection Agency AP-42, Table 5.1-2 (1/95)

Attachment 1
Redondo Beach Energy Project Air Dispersion Modeling Protocol Addendum

Modeling Protocol Addendum

Dispersion Modeling Protocol for the Redondo Beach Energy Project

Prepared for

AES Redondo Beach, LLC

690 N. Studebaker Road
Long Beach, CA 90803

May 9, 2013

Submitted to

South Coast Air Quality Management District and the California Energy Commission

Prepared by

CH2MHILL

2485 Natomas Park Drive, Suite 600
Sacramento, CA 95833

SECTION 1

Introduction

AES Redondo Beach, LLC, (AES) proposes to construct the Redondo Beach Energy Project (RBEP) at the existing AES Redondo Beach Generating Station (RBGS) site at 1100 North Harbor Drive, Redondo Beach, CA 90277. The RBEP will consist of one three-on-one combined-cycle power block with a net capacity of 496 megawatts. The power block will consist of three Mitsubishi Power Systems Americas (MPSA) 501DA combustion turbines, one steam turbine, and an air cooled condenser. Each combustion turbine will be equipped with a heat recovery steam generator (HRSG) and will employ supplemental natural gas firing (duct firing). The turbines will use advanced combustion controls, dry low oxides of nitrogen (NO_x) burners, and selective catalytic reduction to limit NO_x emissions to 2 parts per million by volume (ppmv). Emissions of carbon monoxide (CO) and volatile organic carbon (VOC) will be limited to 2 ppmv and 1 ppmv, respectively, through the use of the advanced combustion controls, combined with the use of an oxidation catalyst. Good combustion practices and burning pipeline-quality natural gas will minimize emissions of the remaining pollutants.

The prevention of significant deterioration (PSD) permit application was submitted to the South Coast Air Quality Management District (SCAQMD) on November 20, 2012. As part of the PSD application process annual emission from the project were compared to the applicable Significant Emission Rates (SERs) for all attainment pollutants. For pollutants that are non-attainment, the project emissions were compared to the SERs in the PSD application. Preliminary dispersion modeling was conducted for those attainment pollutants for which the net annual emissions increase exceeded the SER, and the results compared to the PSD Class II Significant Impact Levels (SILs). Table 1 summarizes the net annual emissions increase from the project compared to the SERs, and preliminary dispersion modeling results compared to the PSD Class II Significant Impact Levels (SILs).

TABLE 1
Ambient NO_2 Background Concentrations in μg/m^3

Pollutant	Averaging Time	Net Annual Emissions Increase (tpy)	SER (tpy)	Maximum Modeled Concentration (μg/m³)	SIL (μg/m³)
NO_2	1-hr	102.3	40	32.06	7.5
NO_2	Annual			0.32	1.00
CO	1-hr	-348.3	100	NA	NA
CO	8-hr			NA	NA
SO2	1-hr	4.8	40	NA	NA
SO2	3-hr			NA	NA
SO2	24-hr			NA	NA

Preliminary dispersion modeling indicated that the proposed project would exceed the SIL for 1-hr NO_2. The permit application did not include a complete 1-hour nitrogen dioxide (NO_2) modeling demonstration for comparison to the National Ambient Air Quality Standards (NAAQS) and RBEP is required to demonstrate compliance with the 1-hour NO_2 NAAQS before the final PSD permit can be granted. The 1-hour NO_2 standard is 100 parts per billion (ppb), or 188 micrograms per cubic meter (μg/m^3), based on the 3-year average of the 98th percentile of the annual distribution of daily maximum 1-hour concentrations. The final rule for the 1-hour NAAQS was published in the Federal Register on February 9, 2010, and became effective on April 12, 2010.

1.1 Purpose of the Protocol Addendum

This addendum discusses the modeling methodology to be used in evaluating the 1-hour NO_2 ambient air quality standard. The 1-hour NO_2 modeling approach for this Project is based on the EPA *Notice Regarding Modeling for New Hourly NO_2 NAAQS* (EPA, February 2010), *Additional Clarification Regarding Applicability of Appendix W Modeling Guidance for the 1-Hour NO_2 NAAQS* (EPA, March 2011), *EPA's Guidance Concerning the Implementation of the 1-hour NO_2 NAAQS for the Prevention of Significant Deterioration Program* (EPA, June 29, 2010), and the *Applicability of Appendix W Modeling Guidance for the 1-hour NO_2 National Ambient Air Quality Standard* (EPA, June 28, 2010). These documents are available on EPA's website (www.epa.gov/ttn/scram).

As required by the above guidance, this protocol is submitted to present the methodology to be used in the 1-hour NO_2 modeling analysis, and the justifications for using the following model settings and options:

- NAAQS cumulative modeling including domain and competing sources
- EPA Tier 2 default Ambient Ratio Method (ARM) NO_2 to NO_x ratio of 0.8
- The potential use of plume volume molar ratio method (PVMRM) modeling tool for better characterizing the conversion of NO_x to NO_2
- The in-stack and equilibrium ambient ratio of NO_2/NO_x used in PVMRM
- The approach of pairing hourly NO_2 modeling data and background monitoring data
- Selection of background hourly NO_2 and ozone (O_3) data

Even though the PVMRM procedures are well recognized and a generally accepted method for characterizing the conversion of NO_x to NO_2, the use of non-default AERMOD options makes the PVMRM no longer a "preferred model", and requires justification and approval by EPA's Regional Office or SCAQMD on a case by case basis. Appendix A presents the justification for use of PVMRM for RBEP.

1.2 PSD Significant Impact Level

In June 2010, EPA issued a memorandum *Guidance Concerning the Implementation of the 1-Hour NO_2 NAAQS for the Prevention of Significant Deterioration Program* (EPA, June 29, 2010). In this guidance memorandum, EPA sets forth a recommended interim 1-hour NO_2 significant impact level (SIL) of 4 ppb (7.6 $\mu g/m^3$) for the PSD air quality analysis for NO_2 until EPA promulgates a 1-hour NO_2 SIL via rulemaking.

EPA requires the interim SIL to be compared to the 5-year average of the maximum modeled 1-hour NO_2 concentration predicted each year at each receptor, based on 5-years of National Weather Service data, or 1 to 5 years of site-specific data. If the modeled concentration is greater than the SIL, cumulative modeling to include competing sources within the impact area is required.

RBEP's estimated NO_x emission increase would be greater than 40 tons per year and, based on a preliminary screening modeling of 1-hour NO_2, the incremental 1-hour NO_2 modeled concentration increase is expected to exceed the interim SIL proposed by EPA. Therefore, cumulative 1-hour NO_2 modeling will be conducted to determine compliance with the NAAQS. A full description of the full 1-hour NAAQS analysis is described below.

SECTION 2

Dispersion Modeling Methodology

The EPA approved AERMOD modeling system (Version 12345) will be used for the 1-hour NO_2 modeling demonstration. The following supporting pre-processing programs for AERMOD will also be used:

- BPIP-Prime (Version 04274)
- AERMAP (Version 11103)

The combustion turbines will be modeled as point sources within AERMOD. Emission rates and other source parameters were determined from the manufacturer's data, which were submitted with the original permit application on November 20, 2012.

AERMOD is a steady-state plume model that simulates air dispersion based on planetary boundary layer turbulence structure and scaling concepts, including treatment of both surface and elevated sources, and both simple and complex terrain. This model is recommended for short-range (< 50 kilometers [km]) dispersion from the source. The model incorporates the Plume Rise Model Enhancement (PRIME) algorithm for modeling building downwash. AERMOD is designed to accept input data prepared by two specific pre-processor programs, AERMET and AERMAP. AERMOD will be run with the following options:

- Direction-specific building downwash
- Actual receptor elevations and hill height scales obtained from AERMAP
- PVMRM (described further below)

2.1 Source Characterization

All proposed sources will be modeled as point sources. Source locations, stack parameters, and emissions rates will be consistent with the original permit application submitted on November 20, 2012.

2.2 Building Downwash

Building influences on stacks are calculated by incorporating the updated EPA Building Profile Input Program for use with the plume-rise model-enhancement algorithm (BPIP-PRIME). The stack heights used in the dispersion modeling will be the actual stack height or Good Engineering Practice (GEP) stack height, whichever is less.

2.3 Meteorological Data

AERMOD will be modeled with 5 years of data collected at the Los Angeles International Airport (LAX) meteorological monitoring station, owned and operated by the SCAQMD. This station was selected because it is very near the project site (10 km north of the project site) and the winds are considered representative of the area. Five complete years of meteorological data collected from 2005 to 2009 were processed by SCAQMD (issued on March 26, 2013) with the AERMET meteorological data preprocessor. Figure 1 below shows the 5-year wind rose for the LAX station.

2.4 Receptors

The ambient air boundary will be defined by the fence line surrounding the project site. The selection of receptors in AERMOD will be as follows:

- The first SIL run will use a nested Cartesian grid as follows:
- 30-meter (m) spacing along the fence line
- 50-m spacing from the fence line to 500 m from the origin

- 100-m spacing from beyond 500 m to 3 km from the origin
- 500-m spacing from beyond 3 km to 10 km from the origin
- 1,000-m spacing from beyond 10 km to 25 km from the origin
- 5,000-m spacing from beyond 25 km to 50 km from the origin
- A competing source run for comparison to the 1-hour NO_2 NAAQS will only include receptors identified in the first run as above the SIL.
- Receptor elevations will be calculated by AERMAP as described below.

AERMAP (Version 11103) will be used to process terrain elevation data for all sources and receptors using National Elevation Dataset (NED) files prepared by the U.S. Geological Survey (USGS). AERMAP first determines the base elevation at each source and receptor. For complex terrain situations, AERMOD captures the physics of dispersion and creates elevation data for the surrounding terrain identified by a parameter called hill height scale. AERMAP creates hill height scale by searching for the terrain height and location that has the greatest influence on dispersion for each individual source and receptor. Both the base elevation and hill-height scale data are produced for each receptor by AERMAP as a file or files that can be directly accessed by AERMOD.

All receptors and source locations will be expressed in the Universal Transverse Mercator North American Datum 1983 (NAD83), Zone 10 coordinate system.

2.5 Monitored Background NO_2 Concentrations

Three complete years of available ambient NO_2 background concentration data from the SCAQMD LAX monitoring station will be used for this analysis. This site was chosen because it is downwind of the RBEP site for the most prevalent meteorological conditions and is in close proximity to the meteorological monitoring tower.

Table 2 shows the monitored concentrations at the LAX monitoring station for NO_2.

TABLE 2
Ambient NO_2 Background Concentrations in $\mu g/m^3$

Pollutant	Value Description	2009	2010	2011
NO_2	1-hour*	131.7	114.6	121.8
	Annual	29.9	22.8	25.2

*98th percentile value

Season hour-of-day background NO_2 concentrations will be determined by following the most recent EPA NO_2 modeling guidance (EPA, March 2011). This includes using the 3rd highest concentration for each hour of day, by season, at the NO_2 monitor. AERMOD will automatically combine the modeled NO_2 concentration to the appropriate background concentration for each hour to determine the model design concentration for comparison to the NAAQS. The values used for the 1-hour background NO_2 concentrations by hour-of-day are summarized in Table 3.

FIGURE 1
LAX 5-year Wind Rose

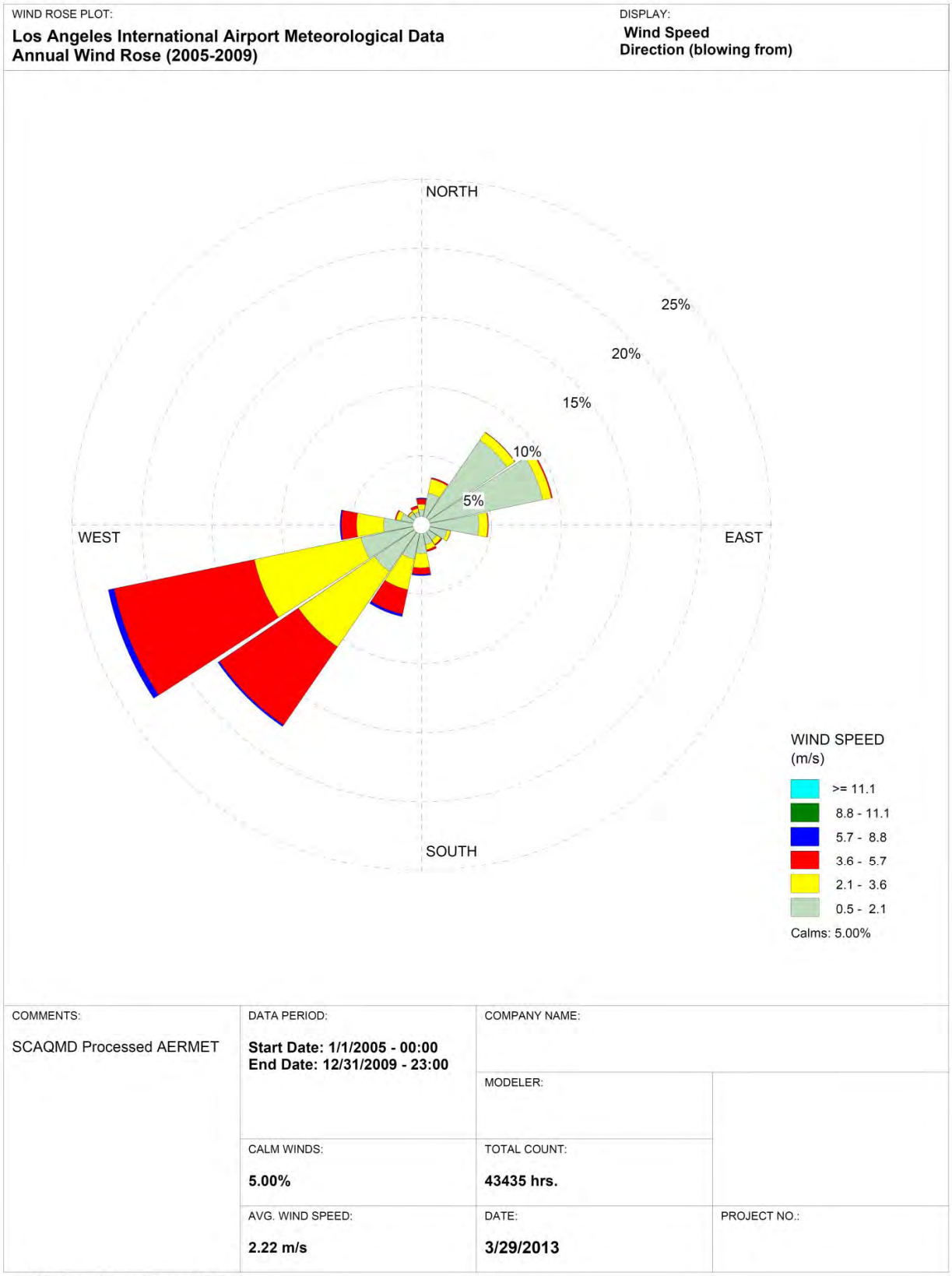

TABLE 3
Ambient 98th Percentile Season Hour-of-Day NO_2 Concentrations (ppb)

Hour of Day	Winter	Spring	Summer	Autumn
1	52.33	34	38	49
2	50.33	32	36.67	47.67
3	48.67	30.67	36.33	48.33
4	49.67	34	33	44.67
5	47.83	34.17	34.67	43
6	46	34.33	36.33	41.33
7	46.33	37.33	38	43.67
8	48.67	34.67	42.33	43.67
9	53	30	38.67	51.33
10	58.33	20.67	33	55.33
11	57	17	30.33	48.33
12	53.33	13	25	45.67
13	44.33	8.333	16.67	45
14	36.33	5.667	12.33	41.33
15	34	5	7	36.33
16	31.33	4	6	39
17	33	4.333	6	43
18	39	5.333	5.333	40
19	43.67	9.667	7.333	40.33
20	46.33	10	10.33	42.67
21	50.33	12.67	24.33	44.67
22	51.33	21	33.67	48.33
23	52	27.67	34.33	51.67
24	53.67	35	39	48.33

Note:

ppb = parts per billion

1-Hour NAAQS Modeling Steps

3.1 Turbine Load Analysis

Turbine emissions and stack parameters, such as flow rate and exit temperature, will exhibit some variation with ambient temperature and operating load. Therefore, the combustion turbines will undergo a load analysis at 70 percent, 80 percent, 90 percent, and 100 percent load for three different temperatures of 33 degrees Fahrenheit (°F), 63.3°F, and 106°F. These loads and temperatures were selected based on anticipated demand on the combustion turbines and the range of temperatures expected at the project site. Additionally, startup and shutdown emissions will also be included in the load analysis.

The above loads and temperature will be evaluated for firing on natural gas with or without duct burning, as applicable. The load and ambient condition that results in the highest predicted 1-hour NO_2 concentration will be used for the project analysis. This analysis will also be used to demonstrate NAAQS compliance for the attainment pollutants (NO_2 annual averaging period, CO, and sulfur dioxide [SO_2]) using the 5-year meteorological data set provided by the SCAQMD. Procedures outlined in the Protocol submitted to SCAQMD on July 10, 2012 will be used to complete the analysis for other pollutants and averaging times and will not be further addressed in this protocol.

3.2 Preliminary SIL Analysis

Using the worst-case load identified in the load analysis for the combustion turbines, the preliminary analysis of the 1-hour NO_2 impacts will be conducted as follows:

- If the predicted impacts are not significant (that is, less than the SIL), the modeling is complete and it is assumed that the proposed Project would not cause or significantly contribute to a modeled exceedance of the 1-hour NO_2 NAAQS.
- If impacts are above the SIL, a more refined analysis will be conducted as described below.

3.3 Refined Analysis

Comparison to the NAAQS will involve the following:

- For pollutants with concentrations greater than the respective SIL, the significant impact area (that is, the significant impact radius) will be defined. Preliminary modeling indicated that the Project may be significant for 1-hour NO_2 with a significant impact radius of 0.9 km from the project site.
- Only receptors identified as above the SIL in the preliminary analysis section, described above, will be included in the refined analysis.
- The maximum modeled design concentration will be determined and compared to the NAAQS. For the NAAQS analysis, this maximum modeled design concentration will include contributions from the facility, competing nearby sources, and background concentrations by season and hour-of-day, described above.
- SCAQMD will be contacted to identify competing nearby and increment consuming sources, and exhaust characteristics, if available, for inclusion in the refined analysis. The section below summarizes the approach to develop the competing source inventory.
- Background concentrations described above will be included in the refined NAAQS analysis.

3.3.1 Competing Source Inventory

As mentioned above, preliminary modeling indicates that the SIL may be exceeded and the significant impact radius extends approximately 0.9 km from the project site. AES understands that SCAQMD will assist in developing a preliminary competing source inventory for conducting the 1-hour NO_2 competing source analysis.

After the preliminary competing source inventory is prepared, AES proposes to discuss inventory refinements with the SCAQMD before the competing source NAAQS is performed. For example, AES proposes to identify sources that are inappropriate for inclusion in the refined 1-hour NO_2 NAAQS analysis and modify the inventory initially provided by the SCAQMD. Following this discussion, SCAQMD will approve a final competing source inventory for AES's use. AES will apply the final, approved inventory of competing sources to complete the refined NAAQS analysis. For the refined NAAQS analysis, allowable emissions from the sources identified on the final inventory will be modeled.

As mentioned above, preliminary SIL modeling indicates that the significant impact radius only extends 0.9 km from the project site. Figure 2 shows the anticipated significant impact radius and the Project proximity to the background monitor location. Based on this significant impact radius and representative location of the ambient monitor, SCAQMD has recommended including competing sources with a distance of 10 km of the project location for the analysis. It would be assumed that the ambient monitor would conservatively include impacts from regional and major sources beyond that distance. Regional sources assumed to be included in the background monitor concentrations would be impacts from LAX, road sources, and minor sources. Major sources beyond 10 km would also be assumed to be included in the monitored background concentrations because pollutant concentrations from major sources beyond 1 km north of the facility would be captured by the monitor. Also, because RBEP is located on the coastline, it is assumed there are not any major sources to the west of the facility. Therefore, AES is requesting a competing source list from SCAQMD for NO_x emitting sources within 10 km of RBEP.

3.3.2 Refined 1-hour NO_2 Analysis

Emergency equipment will not be included in the 1-hour NO_2 NAAQS modeling analysis. Consistent with recent EPA guidance addressing intermittent emissions for the 1-hour NO_2 analysis (EPA, March 2011), exclusion of emergency equipment is appropriate. Startup emissions from the RBEP turbines will be included for the 1-hour NAAQS modeling since startups of the units are expected to frequently occur.

Further refinements of the 1-hour NO_2 modeling include the incorporation of seasonal hour-of-day NO_2 background concentrations and the use of an ambient NO_2 equilibrium ratio and PVMRM in AERMOD, if necessary. The Ambient Ratio Method (ARM) uses 0.80 as a default ambient ratio for the 1-hour NO_2 standard. PVMRM options will initially conservatively assume an in-stack NO_2/NO_x ratio of 0.5 and an ambient NO_2 ratio of 0.9 (EPA, March 2011). If additional analysis is required, AES will consult with SCAQMD to define alternative appropriate in-stack and ambient NO_2 ratios consistent with EPA guidance. Corresponding hourly ozone data for PVMRM will be obtained from the LAX ozone monitoring station. SCAQMD has provided the background hourly ozone data to use with the PVMRM analysis.

To complete the refined 1-hour NO_2 NAAQS modeling analysis, hourly emissions from the competing sources identified on SCAQMD's final inventory will be modeled by apportioning each source's tons per year permitted emissions evenly throughout the year, unless otherwise noted.

The model design concentration of the 5-year average of the 98th percentile hourly impact at each receptor will be compared to the NAAQS of 188 $\mu g/m^3$.

If the model design concentration at any receptor exceeds the NAAQS, the Project impacts during the NAAQS exceedances would be evaluated and compared to the SIL. If the Project's impacts are below the SIL during all modeled exceedances of the NAAQS, then the Project would be assumed to not significantly contribute to the modeled exceedances.

FIGURE 2
RBEP 1-Hour NO_2 SIL Analysis Results

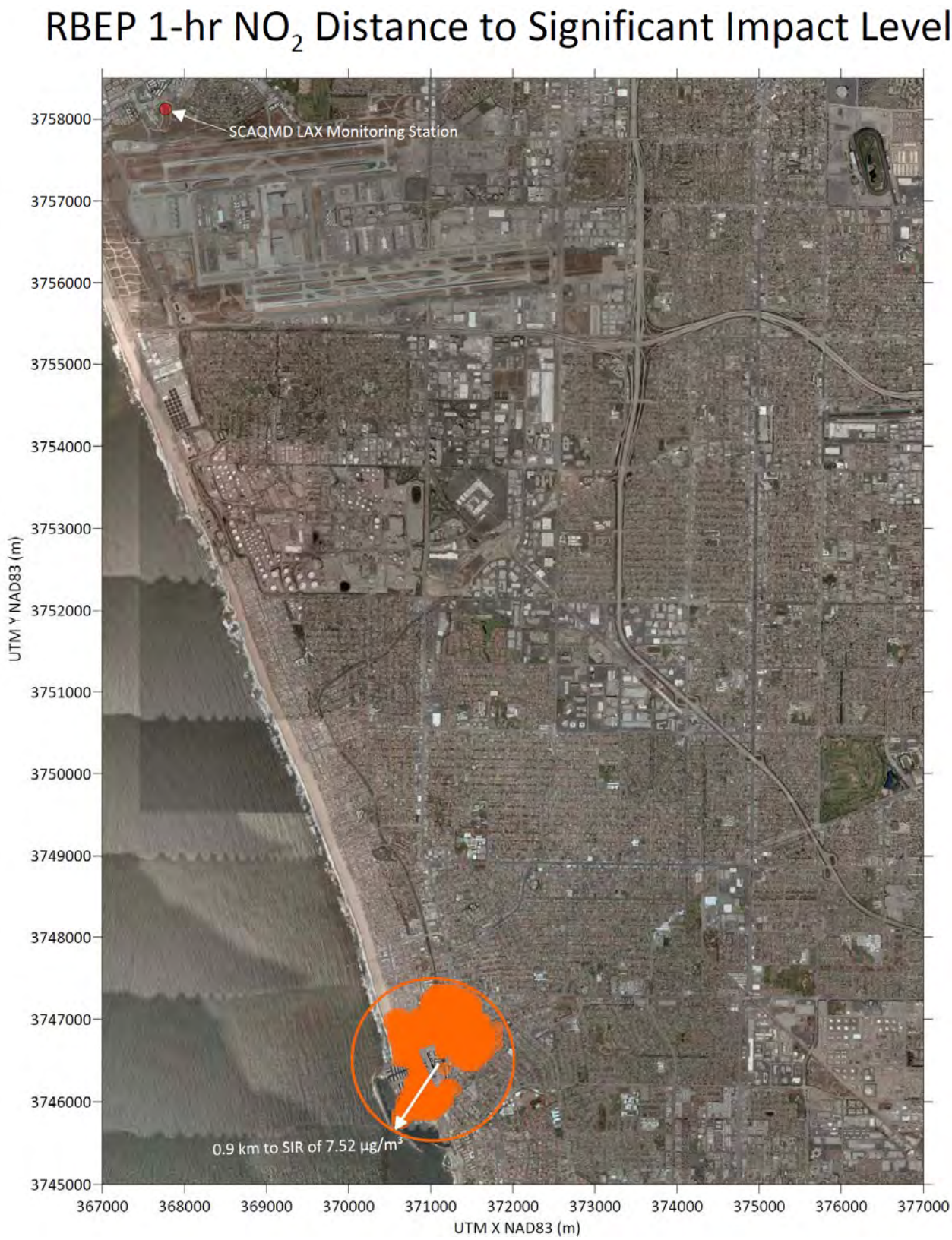

3.4 Output - Presentation of Results

The results of the 1-hour NO_2 air dispersion modeling analysis will be presented as follows:

- A description of modeling methodologies and input data
- A summary of the results in tabular and, where appropriate, graphical and narrative form
- Modeling files used for AERMOD will be provided with the application on a CD-ROM
- Any significant deviations from the methodology proposed in this protocol will be presented

References

EPA. February 2010. *Notice Regarding Modeling for New Hourly NO_2 NAAQS.*

EPA. June 28, 2010. *Applicability of Appendix W Modeling Guidance for the 1-hour NO_2 National Ambient Air Quality Standard*.

EPA. June 29, 2010. *EPA's Guidance Concerning the Implementation of the 1-hour NO_2 NAAQS for the Prevention of Significant Deterioration Program.*

EPA. March 2011. *Additional Clarification Regarding Applicability of Appendix W Modeling Guidance for the 1-Hour NO_2 NAAQS*.

Attachment 2
Redondo Beach Energy Project Oil/Water Separator Form 400-E-18 and Typical Tank Drawing

South Coast Air Quality Management District

Form 400-E-18
Storage Tank

This form must be accompanied by a completed Application for a Permit to Construct/Operate - Forms 400-A, Form 400-CEQA, and Form 400-PS.

Mail To:
SCAQMD
P.O. Box 4944
Diamond Bar, CA 91765-0944

Tel: (909) 396-3385
www.aqmd.gov

Section A - Operator Information

Facility Name (Business Name of Operator That Appears On Permit): AES Redondo Beach LLC

Valid AQMD Facility ID (Available On Permit Or Invoice Issued By AQMD): 115536

Address where the equipment will be operated (for equipment which will be moved to various locations in AQMD's jurisdiction, please list the initial location site): 1100 North Harbor Drive, Redondo Beach, CA 90277

(●) Fixed Location ( ) Various Locations

Tank Type (Select ONE)
( ) External Floating Roof Tank (EFRT) ( ) Internal Floating Roof Tank (IFRT) (●) Horizontal Tank (HT)
( ) Vertical Fixed Roof Tank (VFRT) ( ) Domed External Roof Tank (DEFRT)

Identification
Tank Identification Number: OWS01
Tank Contents/Product (include MSDS): Water and petroleum residue

Section B - Tank Information

Tank Characteristics

Shell Diameter (ft.): 5
Shell Length (ft.): 18
Shell Height (ft.): 5
Turnovers Per Year: 27

Is Tank Heated? ( ) Yes (●) No
Is Tank Underground? ( ) Yes (●) No
Net Throughput (gal/year): 82000
Self Support Roof: (●) Yes ( ) No

Number of Columns? _____
Effective Column Diameter: ( ) 9" by 7" Built Up Column - 1.1 ( ) 8" Diameter Pipe - 0.7 ( ) Unknown - 1

External Shell Condition: (●) Good ( ) Poor
Internal Shell Color: ( ) Light Rust ( ) Dense Rust ( ) Gunite Lining
External Shell Color: (●) White/White ( ) Aluminum/Specular ( ) Aluminum/Diffuse ( ) Gray/Light ( ) Gray/Medium ( ) Red/Primer

Average Liquid Height (ft.) (Vertical Only): _____
Maximum Liquid Height (ft.) (Vertical Only): _____
Working Volume (gal.) (Vertical Only): _____
Actual Volume (gal.) (Vertical Only): _____

Paint Condition: (●) Good ( ) Poor
Paint Color/Shade: (●) White/White ( ) Aluminum/Diffuse ( ) Gray/Light ( ) Aluminum/Specular ( ) Gray/Medium ( ) Red/Primer

Roof Characteristics (Floating Roof Tank)

Roof Type: ( ) Pontoon ( ) Double Deck ( ) Dome Roof (Height_____ ft.) ( ) Cone Roof (Height_____ ft.)
Roof Fitting Category: ( ) Typical ( ) Detail
Roof Height (ft.): _____

Roof Paint Condition: ( ) Good ( ) Poor
Roof Color/Shade: ( ) White/White ( ) Aluminum/Diffuse ( ) Gray/Light ( ) Aluminum/Specular ( ) Gray/Medium ( ) Red/Primer

Deck Characteristics (Floating Roof Tank)

Deck Type: ( ) Welded ( ) Bolted
Deck Fitting Characteristics: ( ) Typical ( ) Detailed (Complete Deck Seam)

Construction:	Deck Seam Length (ft.):	Deck Seam:
( ) Sheet	_____	( ) 5 ft. wide ( ) 6 ft. wide ( ) 7 ft. wide
( ) Panel	_____	( ) 5 x 7.5 ft. ( ) 5 x 12 ft.

Tank Construction and Rim -Seal System (Floating Roof Tank)

Tank Construction: ( ) Welded ( ) Riveted
Primary Seal: ( ) Mechanical Shoe ( ) Vapor Mounted ( ) Liquid Mounted
Secondary Seal: ( ) Rim Mounted ( ) Shoe Mounted ( ) None

Breather Vent Setting

Vacuum Setting (psig): _____
Pressure Setting (psig): _____

* Section D of the application MUST be completed.

© South Coast Air Quality Management District, Form 400-E-18 (2009.04)

South Coast Air Quality Management District

Form 400-E-18
Storage Tank

This form must be accompanied by a completed Application for a Permit to Construct/Operate - Forms 400-A, Form 400-CEQA, and Form 400-PS.

Mail To:
SCAQMD
P.O. Box 4944
Diamond Bar, CA 91765-0944

Tel: (909) 396-3385
www.aqmd.gov

Section B - Tank Information (cont.)

Site Selection

Nearest Major City: Redondo Beach

Daily Average Ambient Temperature (°F): 63.3 Annual Average Minimum Temperature (°F): 33

Annual Average Maximum Temperature (°F): 106 Average Wind Speed (mph): _____

Annual Average Solar Insulation Factor (Btu / (ft^3 * ft * day)): _____

Tank Contents

Chemical Category: (•) Organic Liquids ( ) Crude Oil ( ) Petroleum Distillates

Liquid: (•) Single ( ) Multiple

If Multiple, Select Speciation Option: ( ) Full Speciation ( ) Partial Speciation ( ) Various Weight Speciation ( ) None

Section C - Operation Information

Vapor Control

Vapor Control During Loading or Unloading: ☐ Sparger ☐ Vapor Balance System ☐ Vapor Return Line ☐ Vented to Air Pollution Control Equipment [1]

[1] A separate permit is required. If APC equipment is already permitted, provide Permit or Device Number: _____

Vent Valve Data

Indicate Type of Setting and Vapor Disposal

	Number	Pressure Setting	Vaccum Setting	Discharging to (Check Appropriate Box)		
				Atmosphere	Vapor Control	Flare
Combination				☐	☐	☐
Pressure				☐	☐	☐
Vaccum				☐	☐	☐
Open	1			☒	☐	☐

Materials

Name all liquids, vapors, gases, or mixtures of such material to be stored in this tank:
Oil/water separator will contain primarily precipitation oils/lubricants.

If material is stored in a solution, supply the following information:

Name of Solvent: Water Name of Materials Dissolved: petroleum products

Concentration of Materials Dissolved: _____ % by Weight OR 0.00 % by Volume OR _____ lbs/gal

Section D - Roof/Deck Fitting

Section D is required for the following tanks: External Floating Roof Tank, Internal Floating Roof Tanks, or Domed External Floating Roof Tanks.

Select the number of fittings for each applicable question. Examples: 3 Unbolted Cover, Ungasketed
_____ Unbolted Cover, Gasketed

Roof/Deck Fitting Details

1. Access Hatch (24" diameter well)
   - _____ Bolted Cover, Gasketed
   - _____ Unbolted Cover, UnGasketed
   - _____ Unbolted Cover, Gasketed

2. Automatic Gauge Float Well (20" diameter well)
   - _____ Bolted Cover, Gasketed
   - _____ Unbolted Cover, Ungasketed
   - _____ Unbolted Cover, Gasketed

3. Column Well (24" diameter well)
   - _____ Built-Up Col - Sliding Cover, Gasketed
   - _____ Built-Up Col - Sliding Cover, Ungasketed
   - _____ Pipe Col - Flex, Fabric Sleeve Seal
   - _____ Pipe Col - Sliding Cover, Gasketed
   - _____ Pipe Col - Sliding Cover, Ungasketed

© South Coast Air Quality Management District, Form 400-E-18 (2009.04)

South Coast Air Quality Management District

Form 400-E-18
Storage Tank

This form must be accompanied by a completed Application for a Permit to Construct/Operate - Forms 400-A, Form 400-CEQA, and Form 400-PS.

Section D - Roof/Deck Fitting (cont.)

Roof/Deck Fitting Details (cont.)

4. Gauge Hatch/Sample Well (8" diameter well)
- _____ Weighted Mechanical Actuation, Gasketed
- _____ Weighted Mechanical Actuation, Ungasketed

5. Ladder Well (36" diameter)
- _____ Sliding Cover, Gasketed
- _____ Sliding Cover, Ungasketed

6. Rim Vent (6" diameter)
- _____ Weighted Mechanical Actuation, Gasketed
- _____ Weighted Mechanical Actuation, Ungasketed

7. Roof Drain (3" diameter)
- _____ Open
- _____ 90% Close

8. Roof Leg (3" diameter leg)
- _____ Adjustable, Pontoon Area, Ungasketed
- _____ Adjustable, Center Area, Ungasketed
- _____ Adjustable, Double-Deck Roofs
- _____ Fixed
- _____ Adjustable, Pontoon Area, Gasketed
- _____ Adjustable, Pontoon Area, Sock
- _____ Adjustable, Center Area, Gasketed
- _____ Adjustable, Center Area, Sock

9. Roof Leg or Hang Well
- _____ Adjustable
- _____ Fixed

10. Sample Pipe (24" diameter)
- _____ Slotted Pipe – Sliding Cover, Gasketed
- _____ Slotted Pipe – Sliding Cover, Ungasketed
- _____ Slit Fabric Seal, 10% Open

11. Guided Pole/Sample Well
- _____ Ungasketed, Sliding Cover, Without Float
- _____ Ungasketed Sliding Cover, With Float
- _____ Gasketed Sliding Cover, Without Float
- _____ Gasketed Sliding Cover, With Float
- _____ Gasketed Sliding Cover, With Pole Sleeve
- _____ Gasketed Sliding Cover, With Pole Wiper
- _____ Gasketed Sliding Cover, With Float, Wiper
- _____ Gasketed Sliding Cover, With Float, Sleeve, Wiper
- _____ Gasketed Sliding Cover, With Pole Sleeve, Wiper

12. _____ **Stub Drain (1" diameter)**

13. Unslotted Guide – Pole Well
- _____ Ungasketed, Sliding Cover
- _____ Gasketed Sliding Cover
- _____ Ungasketed Sliding Cover with Sleeve
- _____ Gasketed Sliding Cover with Sleeve
- _____ Gasketed Sliding Cover with Wiper

14. Vacuum Breaker (10" diameter well)
- _____ Weighted Mechanical Actuation, Gasketed
- _____ Weighted Mechanical Actuation, Ungasketed

Section D - Authorization/Signature

I hereby certify that all information contained herein and information submitted with this application is true and correct.

Preparer Info	Signature: [signature] Date: 5/9/13	Name: Jerry Salamy
	Title: Program Manager	Phone #: (916) 286-0207 Fax #: (916) 614-3407
	Company Name: CH2M HILL	Email: jerry.salamy@ch2m.com
Contact Info	Name: Stephen O'Kane	Phone #: (562) 493-7840 Fax #: (562) 493-7737
	Title: Manager	Email: stephen.okane@AES.com
	Company Name: AES Southland LLC	

THIS IS A PUBLIC DOCUMENT

Pursuant to the California Public Records Act, your permit application and any supplemental documentation are public records and may be disclosed to a third party. If you wish to claim certain limited information as exempt from disclosure because it qualifies as a trade secret, as defined in the District's Guidelines for Implementing the California Public Records Act, you must make such claim at the time of submittal to the District.

Check here if you claim that this form or its attachments contain confidential trade secret information. ☐

© South Coast Air Quality Management District, Form 400-E-18 (2009.04)

GENERAL SPECIFICATIONS

NO. REQ'D: (1)
CAPACITY: 3000 GALLONS
SPILL CAPACITY: 900 GALLONS
TYPE: RECTANGULAR, HTC, ABOVEGROUND, SINGLE WALL
MATERIAL: MILD CARBON STEEL
APPROX. WEIGHT: 7000 LBS.
FLOW RATE: 300 GPM
GAUGE:
7 GA THROUGHOUT

SURFACE PREP:
SSPC NO.10 BLAST ALL INTERIOR SURFACES
SSPC NO.6 BLAST ALL EXTERIOR SURFACES

COATING:	MATERIAL	THICKNESS
EXTERIOR–	FINISH PAINT WHITE	(3 MILS)
INTERIOR–	POLYURETHANE	(15 MILS)

CONSTRUCTION:
BUTT FIT AND WELD ALL CORNERS IN & OUT

NOTE:
1. ALL INTERNAL MATERIAL IS 10 GA.
2. ALL FITTINGS MUST SHIP W/ STEEL PLUGS INSTALLED
3. LIFTING LUGS HAVE REINFORCING PLATES

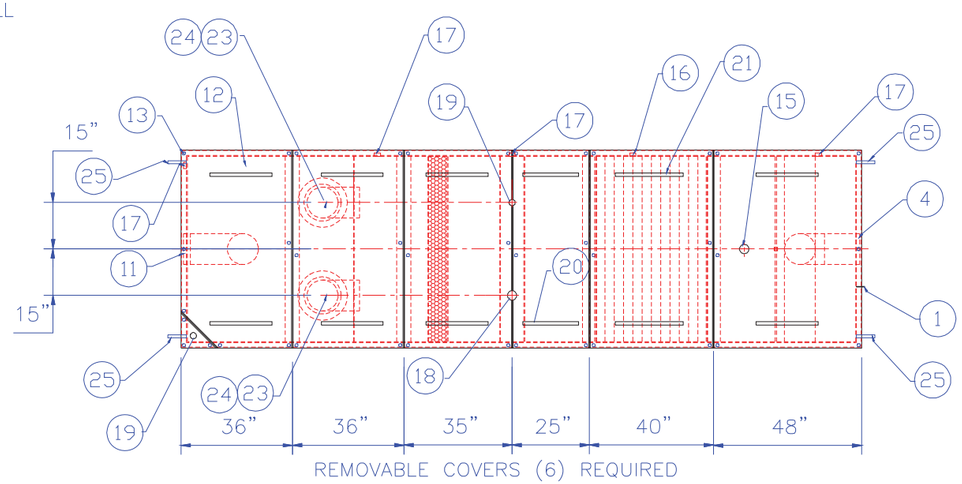

PLAN VIEW

PROVIDED EQUIPMENT

1. 3"X3"X1/4" FLAT W/ 1/2"ø HOLE DRILLED IN CENTER (GROUNDING LUG)
2. SEDIMENT CHAMBER
3. OIL WATER SEPARATOR CHAMBER
4. THREADED INLET
5. PVC INLET ELBOW PIPING
6. VELOCITY HEAD DIFFUSION BAFFLE 10GA
7. WEAR PLATE (1/4" MATERIAL)
8. REMOVABLE PARALLEL CORRUGATED PLATE COALESCER (GALVANIZED) 1" PLATE SPACING
9. SLUDGE BAFFLE – 10GA
10. PVC OUTLET DOWNCOMER
11. THREADED OUTLET
12. REMOVABLE COVERS 6–REQUIRED (7 GA.)
13. NUTS & BOLTS W/ LARGE WING (CORROSION RESISTANT)
14. GASKET MATERIAL (FOR EACH REMOVABLE COVER)
15. 3"ø NPT (CLEAN–OUT)
16. 2"ø NPT (VENT)
17. 2"ø NPT (DRAIN)
18. 3"ø FULL COUPLING W/ 3" INTERNAL PVC PIPE
19. 2"ø NPT (FOR LEVEL SENSOR)
20. 7GA. CROSSMEMBER FOR OIL PUMP–OUT & LEVEL SENSOR FTG.
21. HANDLES PER H.T. STANDARD
22. 6" THICK COALESCER MATERIAL
23. 10"ø STEEL ELBOW W/ FLANGE WELDED TO TOP FOR PVC RISER PIPES
24. 10"ø ADJUSTABLE FERNCO COUPLING
25. LIFTING LUGS
26. 1"ø COUPLING W/ PLUG

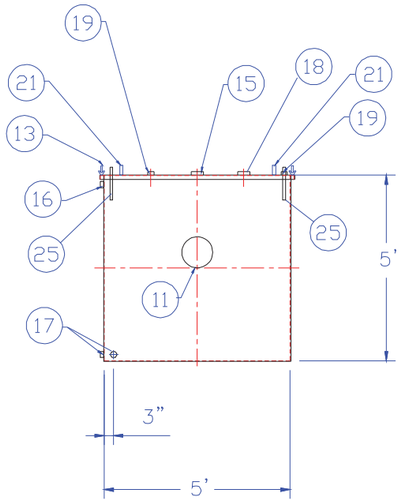

END VIEW

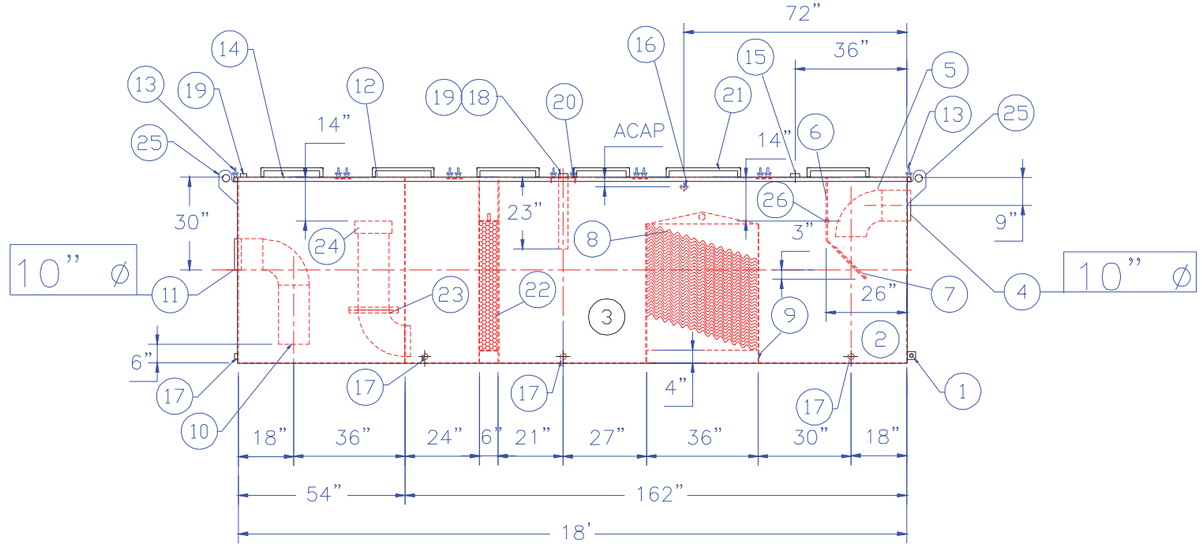

ELEVATION

FIGURE 1
Typical Aboveground 3000 Gallon Oil Water Separator
AES Redondo Beach Energy Project
Redondo Beach, California

Source: Highland Tank, 5/20/2005.

CH2MHILL.