GRENIER & ASSOCIATES, INC.

ENVIRONMENTAL PLANNING • LICENSING & PERMITTING • REGULATORY COMPLIANCE

June 29, 2011 *Compliance Chron Log 2011-029*

Mr. Craig Hoffman
Compliance Project Manager
California Energy Commission
1516 Ninth Street MS-2000
Sacramento, CA 95661

Subject: Rice Solar Energy Project (Docket No. 09-AFC-10C)
Condition of Certification SOIL&WATER-1
Drainage Erosion and Sediment Control Plan

Dear Craig:

In accordance with the requirements of Condition of Certification SOIL&WATER-1, attached for your review and approval is the Drainage Erosion and Sediment Control Plan for the Rice Solar Energy Project. A copy of this document including the SWPPP will be provided to Riverside County and RWQCB in July 2011.

Should you have any questions or require additional information related to this submittal, please contact me at (916) 780-1171.

Sincerely,

Andrea E. Grenier

Andrea E. Grenier
Permitting and Compliance Manager

Attachment

1420 E. Roseville Parkway, Suite 140-377, Roseville, CA 95661
Tel (916) 780-1171 Cell (916) 847-0918 Email andrea@agrenier.com

WorleyParsons

resources & energy

SOLAR RESERVE, LLC
RICE SOLAR ENERGY PROJECT

PRELIMINARY DRAINAGE, EROSION, AND SEDIMENT CONTROL PLAN (DESCP)

27 June 2011

Suite 150, 2230 East Bidwell Street Sacramento (Folsom) California, 95630, USA
Tel: +1 916 817 3920
Fax: +1 916 983 1935

CONTENTS

1. INTRODUCTION 5
2. PURPOSE 5
3. EXISTING CONDITIONS 7
   3.1 Water Features, Rainfall, and Existing Drainage 7
4. PROJECT ELEMENTS 8
   4.1 Construction Site Estimates 8
   4.2 Clearing and Grading 9
   4.3 Project Schedule/Water Pollution Control Schedule 9
5. CONCEPTUAL DRAINAGE PLANS 11
   5.1 Offsite Drainage 11
   5.2 Conceptual Drainage Plans 12
   5.3 Post Construction Drainage 13
6. STORMWATER POLLUTION PREVENTION PLAN 15
7. BEST MANAGEMENT PRACTICES 15
8. REFERENCES 22

APPENDICIES

APPENDIX A: LOCATION MAP AND SITE ARRANGEMENT

APPENDIX B: DRAINAGE EROSION AND SEDIMENT CONTROL FIGURES

APPENDIX C: STORMWATER POLLUTION PREVENTION PLAN

1. INTRODUCTION

SolarReserve proposes to construct the Rice Solar Energy Project (RSEP), a solar thermal energy power plant at the former Rice Army Airfield in Riverside County, California, about 0.5 miles south of Highway 62 and about 76 miles east of Twentynine Palms, California (refer to **Figure 1**). RSEP is expected to occupy an approximately 1,410 acres south of Highway 62. The site boundary will be defined by the fenced and gated perimeter of the project site upon which the solar power plant will be constructed.

The site improvements shall include a perimeter and access road, electrical equipment (step up transformers, inverters, switchyard, communications shelter and plant switchgear), equipment, facility and building foundations, solar components support structures, fencing and gate(s).

2. PURPOSE

The purpose of the Drainage, Erosion and Sediment Control Plan (DESCP) is to address the drainage, erosion and sediment control requirements to support construction and operation of the Rice Solar Energy Project ("Project").

This has been undertaken as outlined in the following sections:

- Vicinity Map – this map indicates the project location (Appendix A)
- Site Delineation – The Rice Solar Energy Project site and all project elements are delineated on a map showing all areas subject to soil disturbance and the location of al existing and proposed structures, roads, and drainage facilities (Appendix A)
- Existing Conditions (**Section 3**) Includes information on the water features, rainfall and existing features of the project area.
- Project Elements (**Section 4**) Includes construction information on clearing/grading and the project schedule.
- Conceptual Drainage Plans (**Section 5** and **Appendix B**) The DESCP provides a topographic site map showing proposed drainage systems. A Conceptual Drainage Study will be prepared at a later date and included in the Final DESCP to support this document. The Conceptual Drainage Study will contain drainage area boundaries, watershed size in acres and contains the hydraulic analysis to support the selection of BMPs to divert offsite drainage around the plant and laydown areas.
- Stormwater Pollution Prevention Plan (SWPPP) (**Section 6** and **Appendix C**) Includes Best Management Practices for erosion and sediment control;
- Best Management Practices (BMPs) (**Section 7**).

The DESCP has been developed based on the current understanding of site conditions and the mitigation requirements of the regulatory agencies. The on site grading and drainage design

are directly interrelated, and adjustments to each will be made during the detailed design phase. The conceptual design can and should be adjusted during the detailed design to provide for the most efficient engineering solutions that provide for storm water quality control and treatment in compliance with the relevant Laws, Ordinances, Regulations and Standards (LORS). Best Management Practices will also be addressed in the SWPPP.

3. EXISTING CONDITIONS

3.1 Water Features, Rainfall, and Existing Drainage

The RSEP site is located within the Rice Valley and has a very slight slope (less than 2 percent overall). This parcel of private land is bordered by State Route 62, the Arizona-California Railroad, and the Colorado River Aqueduct (all three run parallel to each other) on the north, private land to the west, and Bureau of Land Management (BLM) land to the east and south. The BLM manages most of the surrounding lands, with some private holdings interspersed. The site generally slopes from north to south with elevations of approximately 920 to 750 feet above mean sea level. The property is comprised of creosote bush scrub vegetation. Surface runoff from the mountains drains towards the center of the valley, except in the eastern part of the valley, where Big Wash drains to the Colorado River.

Average annual precipitation in the Chuckwalla Planning Area is reported as 430,000 acre-feet (AF). Average annual runoff for the area is 5,000 acre-feet (AF) and occurs primarily during thunderstorms. There are no perennial streams in the planning area and most of the moisture from rain is lost through evapotranspiration. The Colorado River Aqueduct flows in an east-west direction within 1,000 feet north of the RSEP site. Because the aqueduct is a manmade feature, the aqueduct is concrete lined within the hydrologic unit, and is a controlled feature, it does not affect the natural hydrology of the landscape.

The mean annual precipitation (1961 to 1990) is 3.6 inches per year. The minimum and maximum annual precipitation for the period of record is 1.1 inches and 7.0 inches, respectively. Per the National Oceanic and Atmospheric Administration (NOAA) Atlas 14 for the Southeastern California, between 3 and 3.5 inches of rain fall in the 100-year, 24-hour storm event, and extreme events in the nearby area have recorded over 10 inches of rain in 24 hours.

4. PROJECT ELEMENTS

4.1 Construction Site Estimates

The following are estimates of the construction site:

Construction site area [1]	**1,500 acres**	
Impervious area before construction [2]	6 acres	(0.4%)
Impervious area after construction [3]	100 acres	(6.6%)
Anticipated storm water run-on during 10-year 6-hour event [4]	74.44 cfs	

(1) This includes the area north of the project site that will be accessed for construction
(2) This includes the roads
(3) This includes the roads and solar component foundations
(4) The elevated perimeter road, and existing offsite drainage lines and irrigation channels will prevent run-on

It is assumed that all rainfall on the construction site shall flow towards the low point of the site. In the 100 year, 24 hour storm event, 3.5 inches of rainfall shall fall (Figure 43, NOAA Atlas 22, Volume XI).

4.2 Clearing and Grading

Earthwork will be required for the construction of the evaporation ponds, power block, roads and associated ditches and channels. The heliostats can be installed without grading except in locations where minor grading will be required to provide a smooth surface for truck access. It is expected that any grading within the heliostat field will be completed with cuts and fills of less than 6 inches. Vegetation within the heliostat area will be cut or removed only as needed to allow installation of the heliostats. The root structure of vegetation will be allowed to remain to enhance soil stability and to facilitate potential re-growth. The evaporation ponds are designed to utilize local pond excavation to be used for local dike fill construction to minimize the earthwork requirements.

Finish grade in the heliostat area will maintain natural drainage features where practical and grading is to be designed to promote sheet flow where possible.

All excavated soil will be used onsite for grading and leveling purposes and no soils will be disposed of offsite. The grading of the site to design elevations will require cut and fill.

Preliminary cut and fill volumes will be available as part of the 90 percent design package. No surplus soil is expected – the cut and fill volumes will be balanced on site.

4.3 Project Schedule/Water Pollution Control Schedule

The following is a potential schedule of construction activities sequenced with the implementation of construction BMPs. Solar Reserve proposes a 27 - 30 month construction schedule, which is expected to start in late 2011 and anticipates commencing commercial operation by mid 2014. Grading operations are anticipated to be completed in TBD.

The rainy season in Riverside County commences on October 1st and ends on May 31st of each calendar year.

Estimated Start Date	Estimated Finish Date	Construction Activity
October 1	May 31	Rainy Season (Southern California/Santa Ana Region 8 Area)
TBD	TBD	SWPPP Approved
TBD	TBD	Mobilization
TBD	TBD	Project/Construction Start Date
TBD	TBD	Delineate and mark the boundaries of the construction zone
TBD	TBD	Construct Material/Waste Storage Facilities
TBD	TBD	Construct Stabilized Construction Entrance/Exit
TBD	TBD	Install/Maintain Temporary Sediment Controls
TBD	TBD	Install/Maintain Temporary Soil Stabilization
TBD	TBD	Install Sediment Basin / Retention Basin / Ponds
TBD	TBD	Clearing, Grading, Site contouring
TBD	TBD	Construct underground utilities
TBD	TBD	Installation of PV Modules, associated equipment, facilities and buildings
TBD	TBD	Commissioning and Testing

5. CONCEPTUAL DRAINAGE PLANS

5.1 Offsite Drainage

In desert washes, catchment boundaries are known to continually shift over time based on the ground conditions, intensity of the storm event, and velocity of the flow and sediment transportation. The watershed boundary and sub-basin boundaries were selected for the RSEP site based on existing information from available state watershed information, contour intervals, USGS quadrangle maps and available soils mapping information.

Upstream off-site storm water flows are sourced from an area north of SR-62. As outlined in Section 3.5, the California-Arizona Railroad and Colorado River Aqueduct are aligned on the north side of SR-62 in parallel formation (east – west), therefore small dikes were constructed to control the flow path of stormwater crossing these features (from north to south). Upstream stormwater water flows over an inverted siphon of the aqueduct, under the railroad (a small trestle spans the flow), and then flows over SR-62 at small “dips” in the roadway.

There are two dikes directing upstream stormwater run off towards the RSEP site, and therefore the two drainage sheds associated with these two dikes were assessed.

The approximate areas of the upstream drainage sheds are (WorleyParsons 2009b):

- 1,580 acres to the northwest of the RSEP site (sub basins 1, 3 and 4); and
- 2,673 acres to the north east of the RSEP site (sub basins 2, 5 and 6).

In addition, small dikes were constructed to divert off site flows around the previous air field (RSEP site). These small dikes can be seen in aerial photographs and the redirected flows are included in the United States Geological Service (USGS) Maps of the area. Over time, and because of a lack of maintenance, these dikes have been breached and a portion the off site storm flows have returned to sheet flow after crossing SR-62.

The site has an existing grade of less than 2% slope, which is suitable for the installation of solar panel components; therefore no additional grading in the solar field is required.

The Project site is not located in a flood zone, based on FEMA flood zones maps. Groundwater depths vary and are estimated at 364 feet below ground surface based on drilling report by AZCA Drilling & Pump, Inc, dated August 20, 2008.

5.2 Conceptual Drainage Plans

Conceptual drainage plans have been prepared by WorleyParsons to evaluate existing grading and drainage patterns associated with pre-developed conditions and the future post development grading requirements and drainage flows through and around the Project site (refer **Appendix B**). Please note that all drawings are conceptual and will be updated prior to start of construction. The objective of the drainage design was to ensure the solar thermal

development minimizes its overall impact within the Project site and on the downstream properties and drainage system.

A more detailed Conceptual Drainage Study will be prepared and submitted at a later date.

The conceptual drainage study will include:

- Pre Development Drainage Conditions
- Post Development Drainage Conditions
- Post Development Grading Conditions

The expected rainfall in a 25 year, 24 hour storm is 2.25 inches (Figure 41, NOAA Atlas 22, Volume XI). The mean annual precipitation is 4.26 inches (Western Regional Climate Center).

5.3 Post Construction Drainage

On-site storm water management for the RSEP will be provided through the use of source control techniques, site design and treatment control. Stormwater runoff at the site is predominantly sheet flow from the north out of the mountains to the south, eventually discharging into the undeveloped dry desert bed.

Under post development conditions, it is proposed to construct an elevated perimeter ring road with small drainage ditches along the outside of the road in the north portion of the heliostat field to prevent the upstream off site flows from entering the RSEP site. The ditches have been sized to contain the 100 year, 24 hour storm event. Anticipated flows are 622 cubic feet per second (cfs) for the north east area and 563 cfs for the northwest area.

On-site storm water run off within the heliostat field will sheet flow along its current drainage pattern to the south end of the heliostat field. With the exception of the power block areas, site development will maintain controlled collection of ditch flow exiting to channels and then offsite in an area very similar in location and manner as the undeveloped discharge. Efforts will be made to disturb as little vegetation as possible. The undisturbed area and the use of waddles or other BMPs will minimize erosion and provide filtering to the surface water before it reaches the channels. The channels will serve as the necessary retention area for stormwater.

Locations within the power block island that have the potential of chemical or oil releases will be fully contained. Rainfall within the containment areas will be allowed to evaporate or will be drained through an oil water separator. Locations within the power block where “contact” storm water may occur will be contained within a system of curbs or trenches. Drains from these curbed areas or containment trenches will be directed to an oil water separator. The oil separated and captured within the oil water separator will be trucked off-site to a licensed disposal/recycling facility. Clean water discharged from the oil water separator will be used on site by discharging it to the evaporation ponds. The water discharge from the oil water separator will not be discharged to the storm water system.

A berm and ditch will be constructed around the north side of the power block to divert water around the power block.

Culvert crossings will be placed across the east-west road at 100 foot intervals with energy dissipating tees to prevent erosion at the outlets, alternatively road may be built at grade for sheet flow across road.

The diversions channels will be designed to pass flow from a 100 year storm event to prevent damage to facilities; the design will also include in its calculations stormwater run-on to the site.

Paved access roads will be protected from floods via ditches and culverts and rip rap or other stabilized means on the shoulders/slopes. Overall the project is being designed to maintain, to the extent possible, the existing sheet flow patterns on the site.

6. STORMWATER POLLUTION PREVENTION PLAN

A preliminary Stormwater Pollution Prevention Plan (SWPPP) has been prepared to meet the requirements of General Permit No. CAS000002 (Permit) issued by the State of California, State Water Resources Control Board (SWRCB) for construction activity (refer **Appendix C**).

The SWPPP contains Best Management Practices (BMPs) for:

- Erosion Control;
- Sediment Control;
- Wind Erosion;
- Tracking Control;
- Non-stormwater discharges; and
- Waste Management.

The scope of this SWPPP covers all activities associated with the construction of the Project. The selected Contractor will be responsible for performing temporary storm water management and erosion control during construction of the Project using existing and new control measures described within the SWPPP. The selected Contractor will also install all necessary permanent erosion controls and storm water management measures at the Site.

7. BEST MANAGEMENT PRACTICES

Industrial activities with the potential to impact storm water discharges are required to obtain a NPDES permit for those discharges. In California, an Industrial Storm Water General Permit, Order 97-03-DWQ (General Industrial Permit CAS 000001) may be issued to regulate discharges associated with ten broad categories of industrial activities, including electrical

power generating facilities. The General Industrial Permit requires the implementation of BMPs that will protect water quality. This is achieved by undertaking an Industrial SWPPP and monitoring plan. Through compliance with the General Industrial Permit, all potential pollutants generated during the industrial phase will be sufficiently mitigated such that water quality standards will not be violated.

Prior to commercial operation, Rice Solar LLC will develop a SWPPP for operation of the Project site, and implemented to meet the National Pollutant Discharge Elimination System (NPDES) requirements.

The following is list of BMPs that shall be included in the Industrial SWPPP. The relevance of each item will be assessed when the Industrial SWPPP will be developed and may include additional site specific processes.

1) EROSION AND SEDIMENT CONTROL

Erosion and sediment control includes practices to prevent soil particles from being detached and reaching storm drains. BMP measures may include:

- ES-1: *"Implement erosion and sediment control. This shall cover all areas that are not covered by an impervious surface (i.e. areas covered by concrete, asphalt, crushed stone or equivalent"*.
- ES-2: *"Maintain erosion/sediment controls to achieve optimal performance during storm events*".

Erosion and Sediment Control may include temporary or permanent measures to stabilize the soil surface by covering or binding soil particles or preventing the concentration of run off by water or wind erosion. This may include periodically treating dirt roads and exposed surfaces with dust palliatives as needed.

Runoff velocities will be minimized by strategically placing BMPs which may include gravel berms, stone filters, check dams, detention structures and vegetation throughout the project site and in the re-routed offsite drainage channels to provide areas for sediment deposition and to promote the sheet flow of storm water prior to leaving the project site boundary. Native materials (rock and gravel) would be used for the construction of stone filters and check dams when available. Armoured drop structures will be used in channels to maintain a slope of less than 0.5%. Slopes may armoured as required. Armoured material used outside the perimeter security fence and outside the permanent desert tortoise fence will be not be rip rap or other materials that may trap juvenile tortoises, but will be soil cement, concrete paving, smaller diameter gravel or other materials that will not trap tortoises.

The rerouted ephemeral washes will be designed to accommodate flow from a 100-year storm event. The rerouted ephemeral drainage line may also contain a low flow channel within the larger drainage channel.

The outlet of the re-routed washes into the downstream native system will also be designed to minimize any erosion and sediment impacts. As the soil has high erodability, there will be sediment in the stormwater at the outlet, which will be released into the natural drainage system on slope of less than 0.5%. This will include ensuring there is adequate transition between the two systems, preventing sediment deposition at the outlet causing local flooding impacts.

The power block area will be graded with moderate slopes to direct runoff and divert storm water to retention areas or, if necessary, to the solar field.

By its nature, a solar thermal project must keep dust to a minimum, as a film on the mirrors of the solar array will reduce their efficiency for power production. Dust control will be achieved by a combination of soil stabilizers. Operational controls designed to control dust will reduce the overall soil erosion in the area.

2) GOOD HOUSEKEEPING

Good Housekeeping measures aim to maintain a clean and orderly facility. BMP measures may include:

- HOUSE-1: *"Inspect weekly all outdoor areas associated with industrial activity, storm water discharge locations, drainage areas, conveyance systems, waste handling/disposal areas and perimeter areas impacted by off facility materials or storm water run on. Any identified debris, wastes and spilled, tracked or leaked materials shall be cleaned and disposed of properly".*
- HOUSE-2: "*Implement procedures to reduce or prevent material tracking".*
- HOUSE-3: *"Cover all stored industrial materials which can be readily mobilized by contact with storm water.*
- HOUSE-4: *"Contain all stored non-solid industrial materials that can be transported or dispersed via wind dissipation or contact with storm water".*
- HOUSE-5: *"Divert storm water or authorized non-storm water flows from non industrial areas from contact with industrial areas".*

3) PREVENTATIVE MEASURES

Preventative measures minimize the potential spills and leaks from facility equipment, outdoor systems and material handling. BMP measures may include:

- PM-1: *"Identify all equipment and systems used outdoors that may spill or leak pollutants".*
- PM-2: *"Inspect weekly each of the identified equipment and systems to detect leaks or identify conditions that may result in the development of leaks. Weekly inspections may be suspended during periods when there is no outdoor exposure of the equipment and systems"*

- PM-3: *"Establish a schedule to perform maintenance of identified equipment and systems. The schedule shall either be periodic or based upon more appropriate intervals such as hours of use, mileage, age etc".*
- PM-4: *"Establish procedures for prompt maintenance and repair of equipment and systems when inspections detect leaks or when conditions exist that may result in the development of spills or leaks"*

4) SPILL RESPONSE PROCEEDURES

Spill response procedures address incidents of spills or leaked material based upon the quantities and location of significant materials. BMP measures may include:

- SPILL-1: *"Develop and implement spill response procedures. Spill response shall be designed to prevent spilled materials from discharging from the facility via the storm drain system. Spilled materials shall be cleaned promptly and disposed of properly".*
- SPILL-2: *"Identify and describe all necessary and appropriate spill response equipment, location of spill response equipment and spill response equipment maintenance procedures".*
- SPILL-3: *"Identity and train appropriate spill personnel".*

5) MATERIAL HANDLING/WASTE MANAGEMENT

Material handling practices will minimize exposure of water materials to storm water. BMP measures may include:

- MAT/WASTE-1: *"Prevent or minimize handling of materials or wastes that can be readily mobilized by contact with storm water during a storm event".*
- MAT/WASTE-2: *"Contain non-solid materials or wastes that can be dispersed via wind erosion during handling"*
- MAT/WASTE-3: *"Cover waste disposal containers when not in use"*
- MAT/WASTE-4: *"Clean all spills of materials/wastes that occur during handling in accordance with the spill response procedures required in SPILL-1".*
- MAT/WASTE-5: *"Inspect and clean daily any outdoor material/waste handling equipment or containers that can be contaminated by contact with industrial materials or wastes".*

6) EMPLOYEE TRAINING PROGRAM

The employee training program ensures adequate training for the personnel responsible for implementing the SWPPP, monitoring program, and other compliance activities in the General Industrial Permit. BMP measures may include:

- TRAIN-1: *"Prepare or acquire appropriate training manuals or training material".*

- TRAIN-2: *"Identify which personnel shall be trained, their responsibilities and type of training they shall receive".*
- TRAIN-3: *"Provide training schedule".*
- TRAIN-4: *"Maintain documentation of all completed training classes and the personnel who received training".*

7) RECORD KEEPING AND QUALITY ASSURANCE

Compliance activities shall be completed properly, documented and maintained. BMP measures may include:

- REC-1: *"Keep and maintain records of inspections, spills, BMP related maintenance activities, corrective actions, visual observations etc"*
- REC-2: *"Develop and implement management procedures to ensure that appropriate staff implements all elements of the SWPPP and Monitoring Program"*

8) VISUAL INSPECTIONS

Periodic visual inspections are required to ensure that the SWPPP addresses any significant changes to the facilities operations or BMP implementation procedures. BMP measures may include:

- INSPECT-1: *"Conduct a minimum of four quarterly visual inspections or all areas of the industrial activity and associated potential pollutant source. The annual comprehensive evaluation may substitute one of the quarterly inspections".*
- INSPECT-2: *"Implement any corrective actions and/or SWPPP revisions resulting from the inspection".*
- INSPECT-3: *"Prepare a summary and status of the corrective actions and SWPPP revisions resulting from the inspections. Include this summary in the Annual Report".*
- INSPECT-4: *"Certify in the Annual report that each quarterly visual inspection was completed".*

8. REFERENCES

1) Conceptual Drainage Study for RICE Solar Energy Project, WorleyParsons Group Inc, August 19th 2009.

2) Preliminary Stormwater Pollution Prevention Plan for Rice Solar Energy Project, WorleyParsons Group Inc, May 2009.

3) California BMP Handbook for New Development and Redevelopment, the "Urban Runoff Quality Management Approach"

4) Riverside County Stormwater Quality Best Management Practice Design Handbook, Riverside County Flood Control and Water Conservation District, July 21 2006

5) Hydrology Manual, Riverside County Flood Control and Water Conservation District, April 1978

APPENDIX A – LOCATION MAP AND SITE ARRANGEMENT

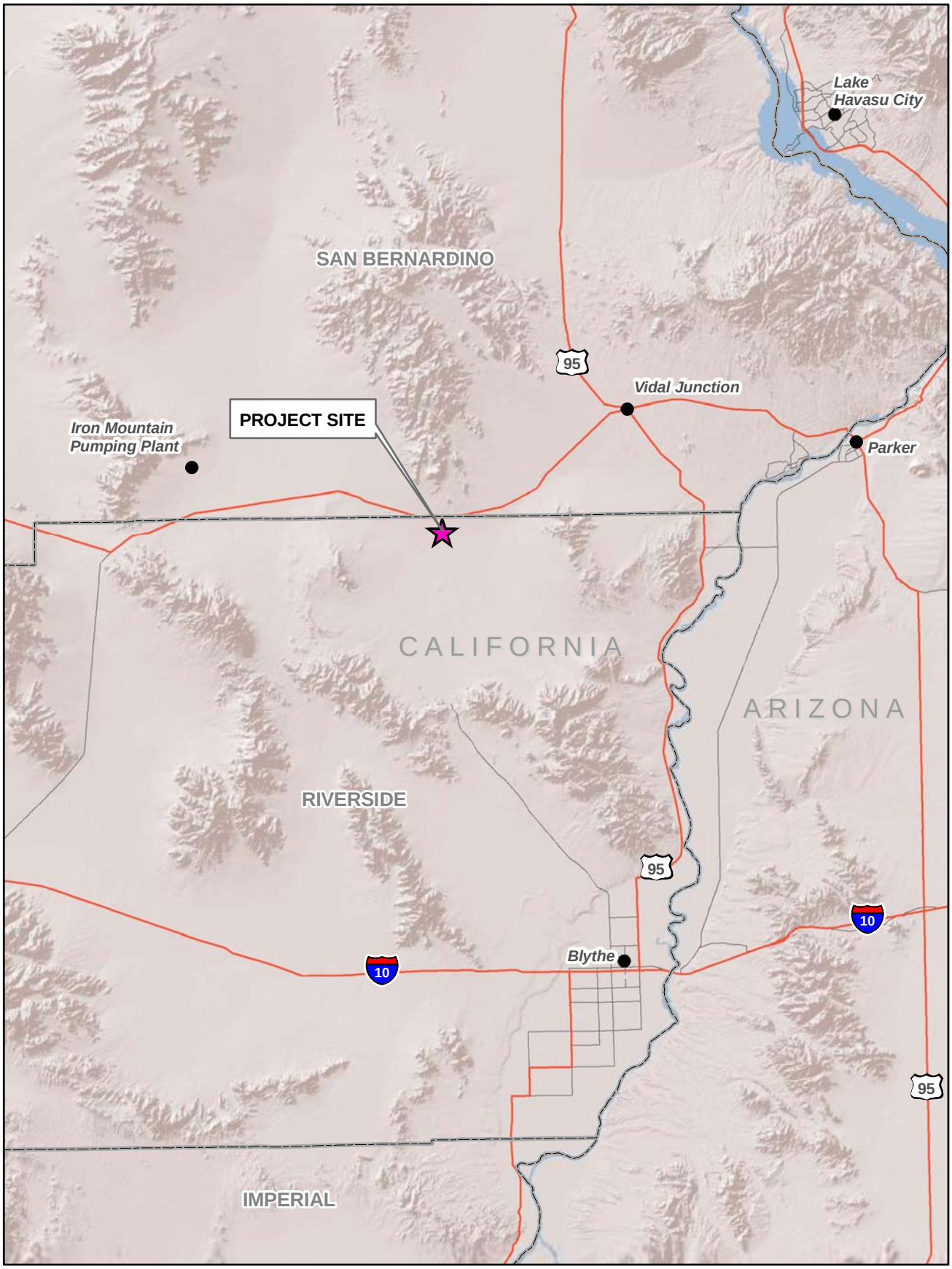

LEGEND

PROJECT SITE

COUNTY BOUNDARIES

N

0 5 10

Miles

FIGURE 1.1-1
PROJECT LOCATION
RICE SOLAR ENERGY PROJECT
RICE, RIVERSIDE COUNTY, CALIFORNIA

SAC\\ZION\SACGIS\PROJ\SOLARPROJECTS\SOLARRESERVE_377714\MAPFILES\PROJECTVICINITY.MXD MHASKELL 8/3/2009 12:22:03

CH2MHILL

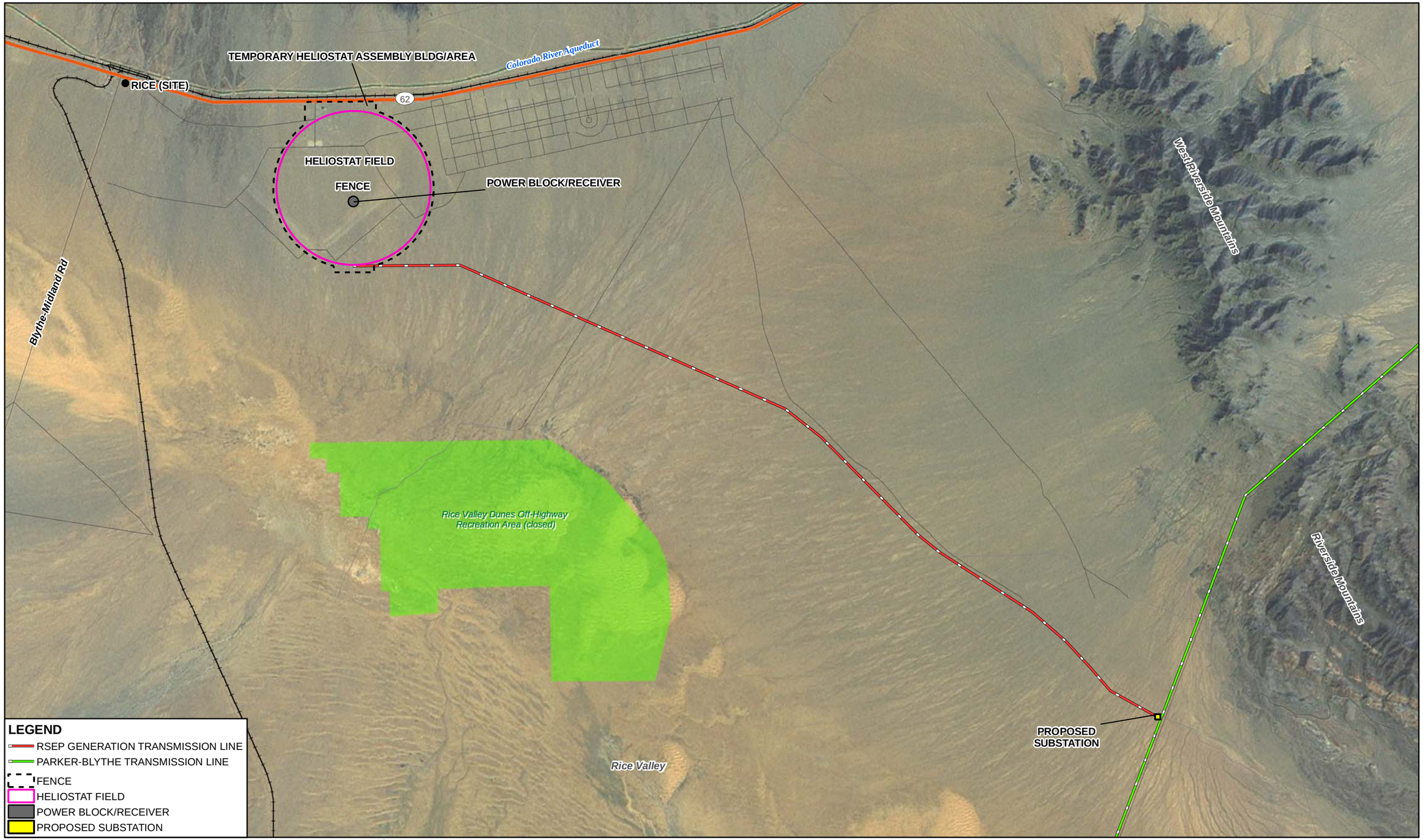

This map was compiled from various scale source data and maps and is intended for use as only an approximate representation of actual locations.

N

0 0.5 1
Miles

FIGURE 1.1-2
SITE LOCATION
RICE SOLAR ENERGY PROJECT
RICE, RIVERSIDE COUNTY, CALIFORNIA

CH2MHILL

SAC\\ZION\SACGIS\PROJ\SOLARPROJECTS\SOLARRESERVE_377714\MAPFILES\FIG113_SITELOCATION.MXD MHASKELL 8/3/2009 11:22:03

LEGEND

- CHAIN LINK FENCING
- ELECTRICAL TRANSMISSION LINE
- OWNERSHIP BOUNDARY

NOTES

1. NORTHING AND EASTING COORDINATES BASED ON CALIFORNIA NAD83 ZONE VI COORDINATE SYSTEM.
2. THE PARKING AND LAYDOWN AREAS SHOWN ARE LABELED "OFF-SITE" BECASUE THEY ARE LOCATED OUTSIDE THE PERMANENT FENCE LINE AND THE PERMANENT FACILITIES. ADDITIONAL PARKING AND LAYDOWN WILL BE USED WITHIN THE HELIOSTAT FIELD AND POWER BLOCK AREA, BUT ARE NOT SHOWN.

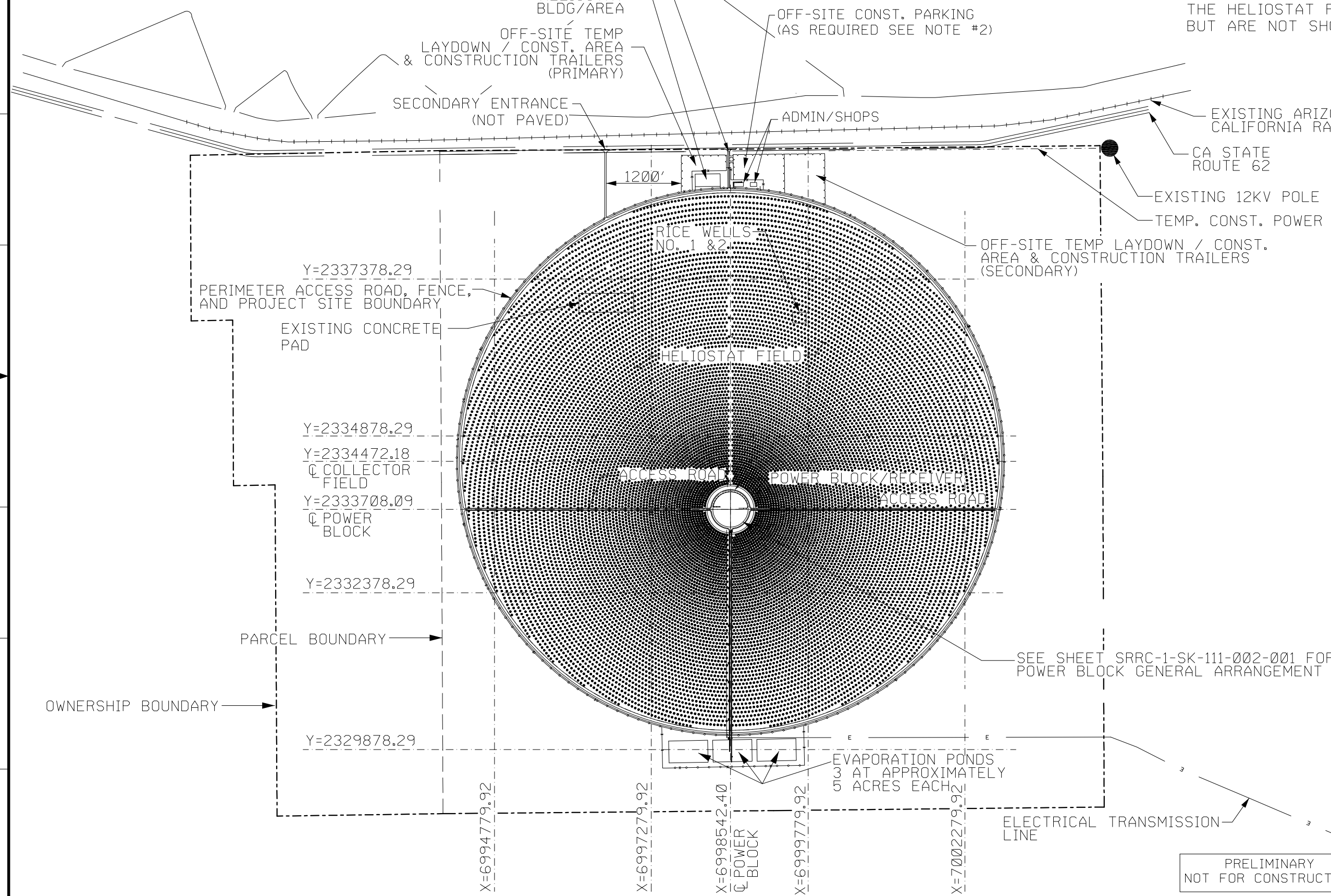

N

0 1600 3200

1" = 1600 FT

REV	DATE	DESCRIPTION	DRAWN	CHECKED	LEAD DESIGNER	ENGINEER/ TECH. SPEC.	LEAD DISC ENGINEER	PROJ ENGR MANAGER	PROJECT MANAGER
K	05 23 11	ISSUED FOR REVIEW	AP						
J	10 04 10	ISSUED FOR REVIEW	AP	JD	PL	JD	BA	BA	BA
I	09 30 10	ISSUED FOR REVIEW	AP	JD	PL	JD	BA	BA	BA
H	07 07 10	ISSUED FOR REVIEW	PM	JD	PL	JD	BA	BA	BA
G	10 06 09	ISSUED FOR REVIEW	AP	JD	PL	JD	BA	BA	BA
F	09 30 09	ISSUED FOR REVIEW	CM	JD	CM	JD	BA	BA	BA
E	08 24 09	EVAP. POND/2ND ACCESS	CM	JD	CM	JD	BA	BA	BA
D	08 03 09	ISSUED FOR REVIEW	CM	JD	CM	JD	BA	BA	BA
C	06 30 09	ISSUED FOR REVIEW	CM	JD	CM	JD	BA	BA	BA
B	06 29 09	ISSUED FOR REVIEW	CM	JD	CM	JD	BA	BA	BA
A	02 11 09	ISSUED FOR REVIEW	CM	JD	CM	JD	BA	BA	BA

PRELIMINARY STATUS DATE — REPRESENTS GENERAL DESIGN CONCEPTS BASED ON ASSUMPTIONS. REVIEWED NOT CHECKED.
LDE

APPROVED STATUS DATE — REPRESENTS REVIEWED AND APPROVED DESIGN. ANY PORTION MARKED "HOLD" RETAINS PRELIMINARY STATUS.
LDE

ORIGINATING PERSONNEL

DRAWN BY: C. MAHER
CHECKED BY: J. DAHLGREN
LEAD DESIGNER: C. MAHER
ENGINEER/TECH SPECIALIST: J. DAHLGREN
PROJECT ENGINEERING MANAGER: B. ANDERS
PROJECT MANAGER: B. ANDERS

PROFESSIONAL ENGINEER'S SEAL

Zero Harm — Leadership, No Incidents, Safe Behavior

ORIGINALLY PREPARED UNDER THE RESPONSIBLE SUPERVISION OF
PE: _____ STATE: _____
LIC. NO.: _____ DATE: _____

WorleyParsons resources & energy

RICESOLAR

CLIENT/PROJECT TITLE

RICE SOLAR ENERGY, LLC
RICE SOLAR ENERGY PROJECT

CONCEPTUAL GENERAL ARRANGEMENT AND OVERALL SITE PLAN

SCALE 1"=1600' | DRAWING SIZE 11x17

WORLEYPARSONS DWG. NO. SRRC-0-SK-112-111-001 | REV K

PRELIMINARY
NOT FOR CONSTRUCTION

APPENDIX B – DRAINAGE EROSION AND SEDIMENT CONTROL FIGURES

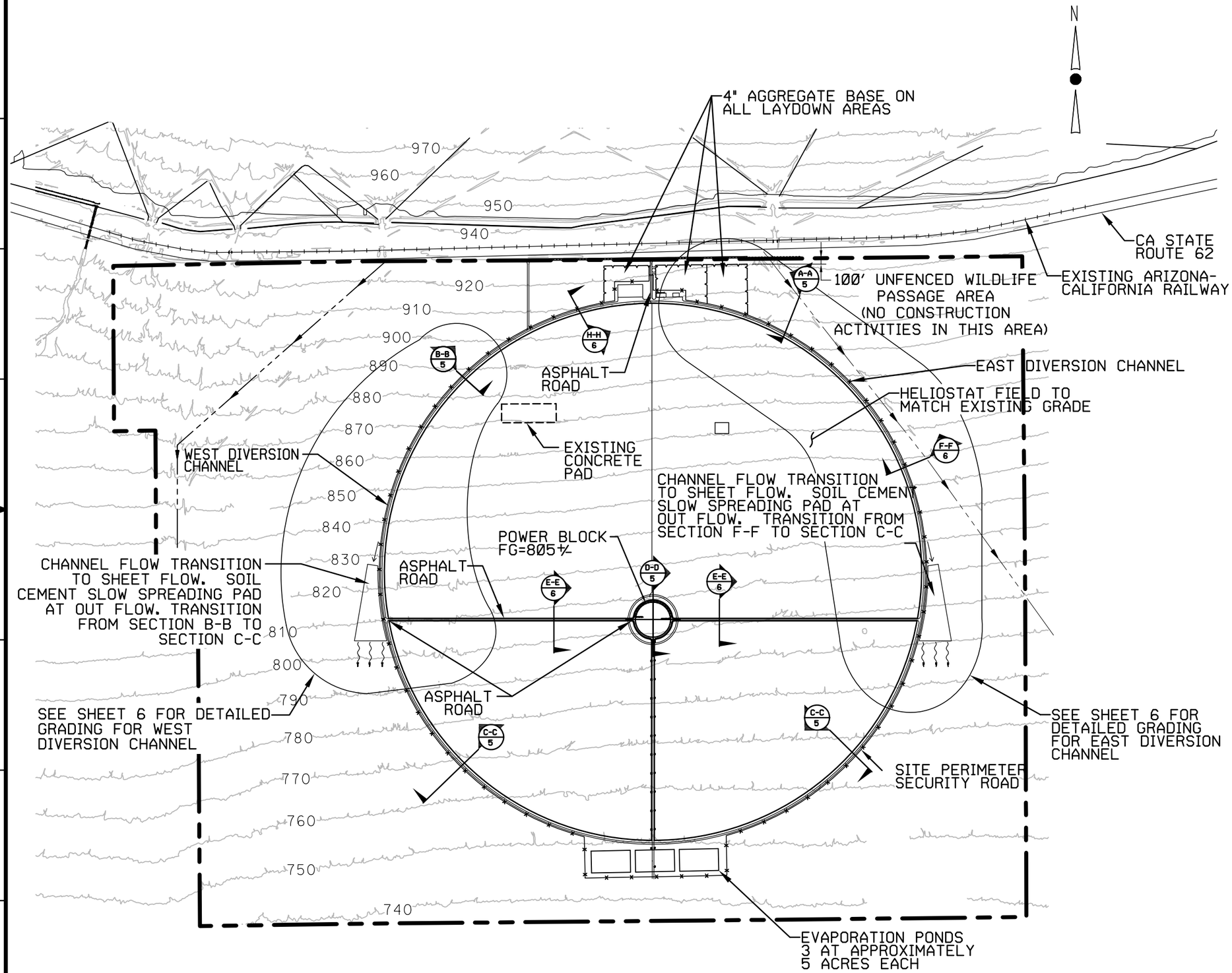

LEGEND:

- PROPERTY BOUNDARY
- 492 EXISTING CONTOUR
- EXISTING BERM
- FENCE

NOTES:

1. 10 FOOT CONTOURS PROVIDED BY DAVID EVANS AND ASSOCIATES
2. SEE SHEET 5 AND 6 FOR CROSS SECTIONS
3. HELIOSTAT FIELD GRADES TO MATCH EXISTING GRADES. MINOR CUTS/FILLS WILL BE MADE WHERE REQUIRED TO SMOOTH SURFACE TO ALLOW VEHICLE ACCESS WITHIN HELIOSTAT FIELD.
4. TOTAL CUT/FILL ±380,000 CY TO BALANCE. NO IMPORT OR EXPORT.
5. INSTALL ASPHALT PAVEMENT FROM MAIN ENTRANCE TO POWER BLOCK ALONG THE ACCESS ROAD ON THE WEST SIDE OF THE SITE.

0 1600 3200

1" = 1600 FT

REV	DATE	DESCRIPTION	DRAWN	CHECKED	TECH SPEC	ENGINEER	PROJ ENGR	PROJ MGR
A	06 21 11	ISSUED FOR PERMITTING	PM	JB	PM	JB	JB	JB	BA

PRELIMINARY STATUS — DATE — LDE

REPRESENTS GENERAL DESIGN CONCEPTS BASED ON ASSUMPTIONS. REVIEWED NOT CHECKED.

APPROVED STATUS — DATE — LDE

REPRESENTS REVIEWED AND APPROVED DESIGN. ANY PORTION MARKED "HOLD" RETAINS PRELIMINARY STATUS.

ORIGINATING PERSONNEL

DRAWN BY: P. McKENNA
CHECKED BY: J. BRAVO
LEAD DESIGNER: P. McKENNA
ENGINEER/TECH SPECIALIST: J. BRAVO
PROJECT ENGINEERING MANAGER: J. BRAVO
PROJECT MANAGER: B. ANDERS

PROFESSIONAL ENGINEER'S SEAL

Zero Harm — Leadership, No incidents, Safe Behavior

WORLEY PREPARED UNDER THE DIRECTION OF — PE — STATE — LIC. NO. — DATED

WorleyParsons resources & energy

CLIENT/PROJECT TITLE: RICESOLAR

SWPPP/DESCP
CONCEPTUAL GRADING AND DRAINAGE PLANS

SCALE: 1"=1600' — DRAWING SIZE: 11" x 17"

WORLEYPARSONS DWG. NO.: SRRC-0-SK-112-716-001 — REV: A

SRRC-0-SK-112-716-001.dwg 21-Jun-2011 - 17:02

PRELIMINARY
NOT FOR CONSTRUCTION

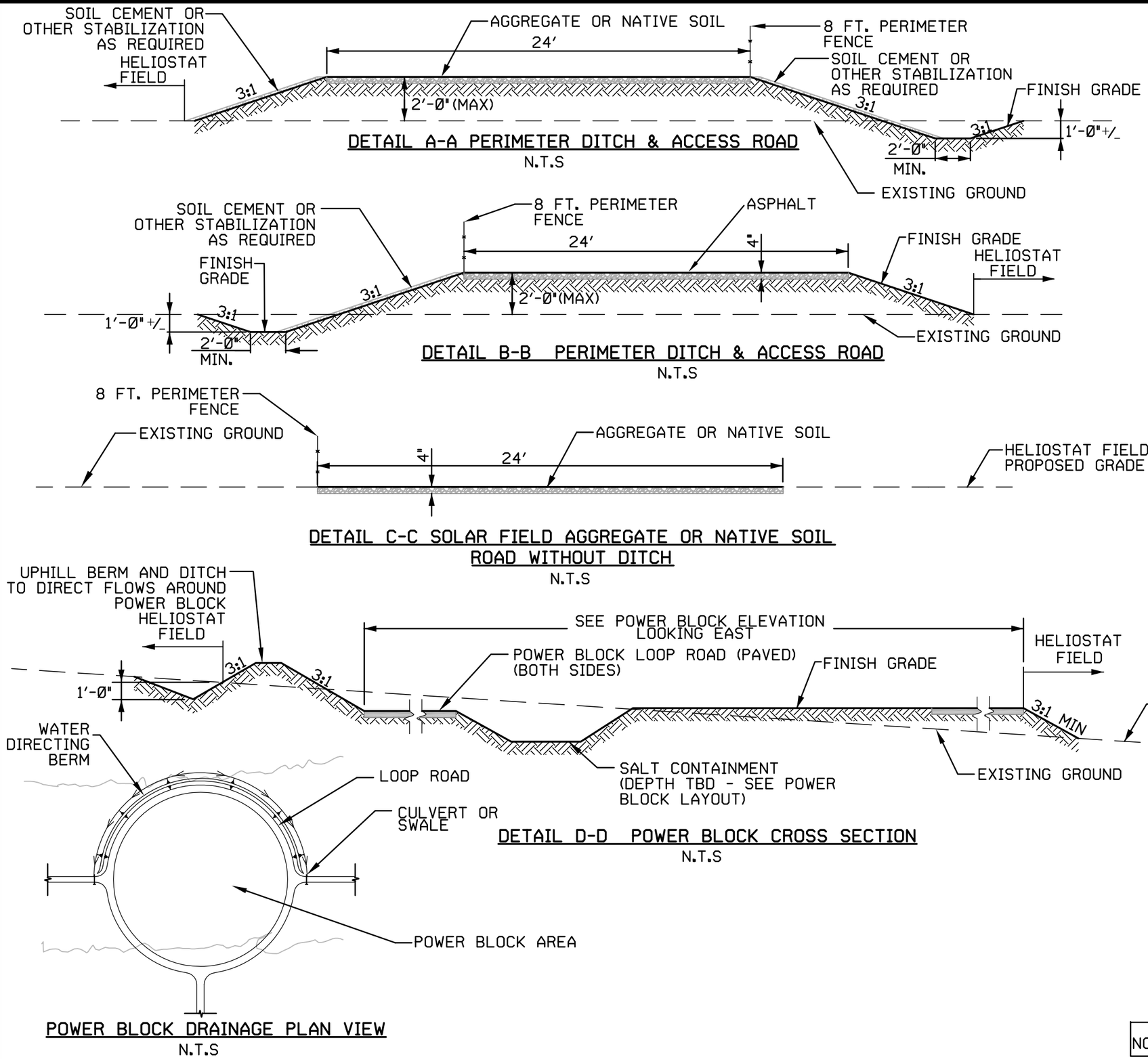

DETAIL A-A PERIMETER DITCH & ACCESS ROAD
N.T.S

DETAIL B-B PERIMETER DITCH & ACCESS ROAD
N.T.S

DETAIL C-C SOLAR FIELD AGGREGATE OR NATIVE SOIL ROAD WITHOUT DITCH
N.T.S

DETAIL D-D POWER BLOCK CROSS SECTION
N.T.S

POWER BLOCK DRAINAGE PLAN VIEW
N.T.S

NOTES:

1. "HELIOSTAT FIELD PROPOSED GRADE" IS AT EXISTING SURFACE GRADE, EXCEPT WHERE MINOR RUTS / DEPRESSIONS MUST BE GRADED TO ALLOW VEHICLE ACCESS WITHIN HELIOSTAT FIELD.
2. DROP STRUCTURES MAY BE INSTALLED IN DITCHES TO LIMIT DITCH SLOPE AND VELOCITY WITHIN THE PERIMETER DITCHES. SEE DROP STRUCTURE DETAIL ON SHEET SRRC-0-SK-112-716-005.

PRELIMINARY
NOT FOR CONSTRUCTION

REV	DATE	DESCRIPTION	DRAWN	CHECKED	LEAD DESIGNER	ENGINEER/TECH SPEC	LEAD DISC ENGINEER	PROJ ENGR MANAGER	PROJECT MANAGER
A	05 21 11	ISSUED FOR PERMITTING	PH	JB	PH	JB	JB	JB	BA

PRELIMINARY STATUS — DATE — REPRESENTS GENERAL DESIGN CONCEPTS BASED ON ASSUMPTIONS. REVIEWED NOT CHECKED.
LDE
APPROVED STATUS — DATE — REPRESENTS REVIEWED AND APPROVED DESIGN. ANY PORTION MARKED "HOLD" RETAINS PRELIMINARY STATUS.
LDE

ORIGINATING PERSONNEL
DRAWN BY: P. McKENNA
CHECKED BY: J. BRAVO
LEAD DESIGNER: P. McKENNA
ENGINEER/TECH SPECIALIST: J. BRAVO
PROJECT ENGINEERING MANAGER: J. BRAVO
PROJECT MANAGER: B. ANDERS

PROFESSIONAL ENGINEER'S SEAL

Zero Harm — Leadership, No Incidents, Safe Behavior

WorleyParsons resources & energy

CLIENT/PROJECT TITLE: RICESOLAR

SWPPP/DESCP
CONCEPTUAL GRADING AND DRAINAGE PLAN
CROSS SECTIONS I

SCALE: NTS — DRAWING SIZE: 11" x 17"
WORLEYPARSONS DWG. NO.: SRRC-0-SK-112-716-002 — REV: A

SRRC-0-SK-112-716-002.dwg
21-Jun-2011 - 14:54

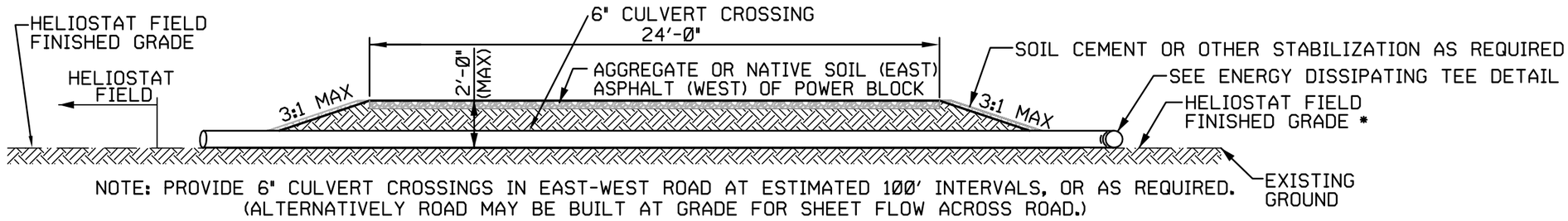

NOTE: PROVIDE 6" CULVERT CROSSINGS IN EAST-WEST ROAD AT ESTIMATED 100' INTERVALS, OR AS REQUIRED. (ALTERNATIVELY ROAD MAY BE BUILT AT GRADE FOR SHEET FLOW ACROSS ROAD.)

DETAIL E-E SOLAR FIELD AGGREGATE BASE ACCESS ROAD WITHOUT DITCH

N.T.S

NOTES:

1. *"HELIOSTAT FIELD PROPOSED GRADE" IS AT EXISTING SURFACE GRADE, EXCEPT WHERE MINOR RUTS / DEPRESSIONS MUST BE GRADED TO ALLOW VEHICLE ACCESS WITHIN HELIOSTAT FIELD.
2. DROP STRUCTURES MAY BE INSTALLED IN DITCHES (SECTION B-B AND F-F) TO LIMIT DITCH SLOPE AND VELOCITY WITHIN THE PERIMETER DITCHES. SEE DROP STRUCTURE DETAIL ON SHEET SRRC-0-SK-112-716-004.

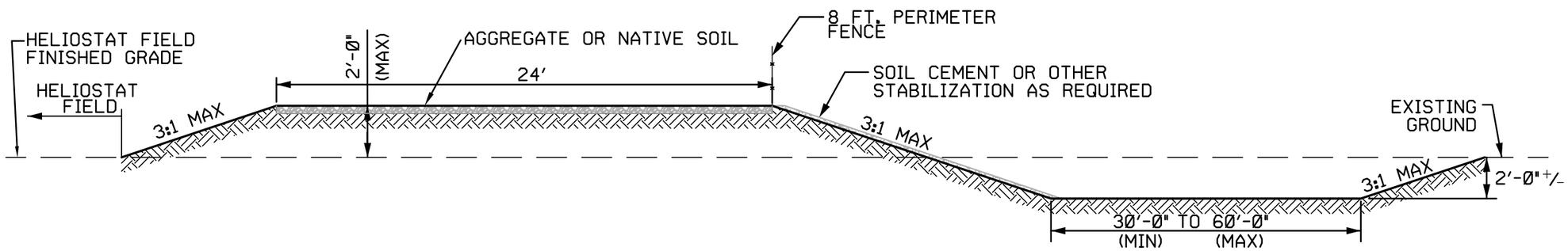

DETAIL F-F PERIMETER DITCH & ACCESS ROAD

N.T.S

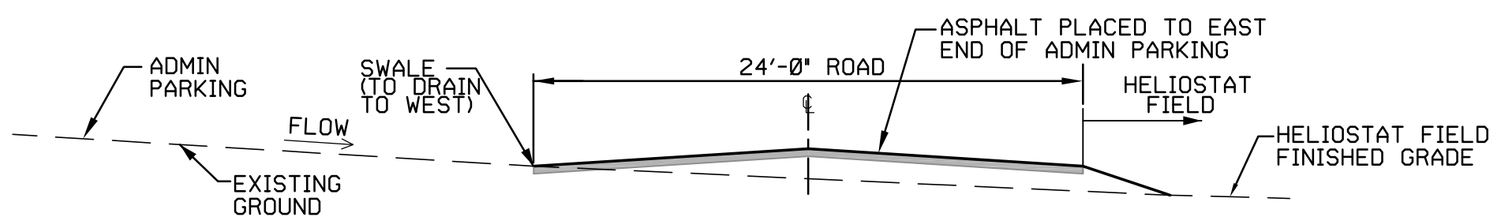

DETAIL H-H ACCESS ROAD

N.T.S

PRELIMINARY
NOT FOR CONSTRUCTION

REV	DATE	DESCRIPTION	DRAWN	CHECKED	LEAD DESIGNER	ENGINEER/TECH SPEC	LEAD DISC ENGINEER	PROJ ENGR MANAGER	PROJECT MANAGER
A	06 21 11	ISSUED FOR PERMITTING	PM	JB	PM	JB	JB	JB	BA

PRELIMINARY STATUS — DATE — REPRESENTS GENERAL DESIGN CONCEPTS BASED ON ASSUMPTIONS. REVIEWED NOT CHECKED.
LDE

APPROVED STATUS — DATE — REPRESENTS REVIEWED AND APPROVED DESIGN. ANY PORTION MARKED "HOLD" RETAINS PRELIMINARY STATUS.
LDE

ORIGINATING PERSONNEL
DRAWN BY: P. McKENNA
CHECKED BY: J. BRAVO
LEAD DESIGNER: P. McKENNA
ENGINEER/TECH SPECIALIST: J. BRAVO
PROJECT ENGINEERING MANAGER: J. BRAVO
PROJECT MANAGER: B. ANDERS

PROFESSIONAL ENGINEER'S SEAL

Zero Harm — Leadership, No Incidents, Safe Behavior

WorleyParsons resources & energy

CLIENT/PROJECT TITLE: RICESOLAR

SWPPP/DESCP
CONCEPTUAL GRADING AND DRAINAGE PLANS
CROSS SECTIONS II

SCALE: NTS — DRAWING SIZE: 11" x 17"
WORLEYPARSONS DWG. NO.: SRRC-0-SK-112-716-003 — REV: A

SRRC-0-SK-112-716-003.dwg
22-Jun-2011 - 10:29

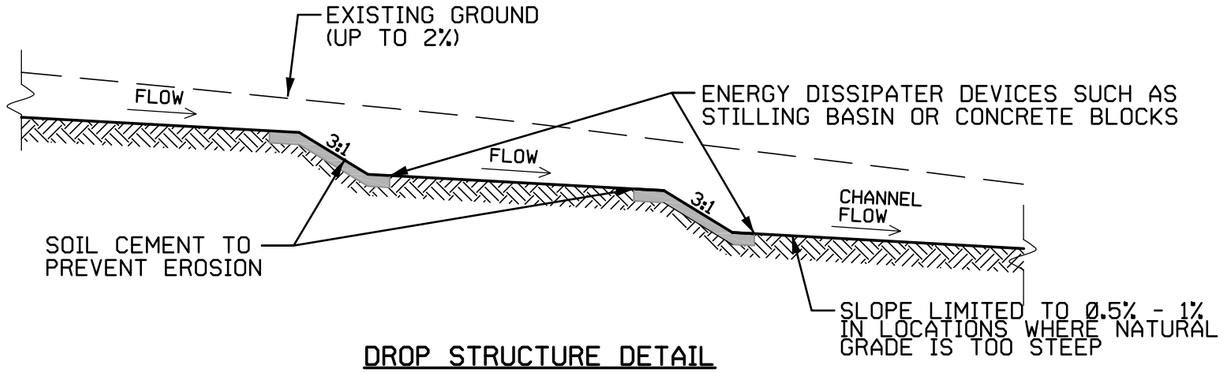

DROP STRUCTURE DETAIL

(TYP PROFILE OF PERIMETER DITCHES
SECTION B-B AND F-F)
N.T.S

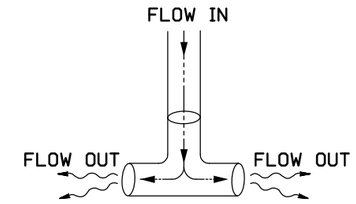

ENERGY DISSIPATING TEE DETAIL

N.T.S

NOTES:

1. "HELIOSTAT FIELD PROPOSED GRADE" IS AT EXISTING SURFACE GRADE, EXCEPT WHERE MINOR RUTS / DEPRESSIONS MUST BE GRADED TO ALLOW VEHICLE ACCESS WITHIN HELIOSTAT FIELD.
2. DROP STRUCTURES MAY BE INSTALLED IN DITCHES (SECTION B-B AND F-F) TO LIMIT DITCH SLOPE AND VELOCITY WITHIN THE PERIMETER DITCHES. SEE DROP STRUCTURE DETAIL ON SHEET SRRC-0-SK-112-716-005.

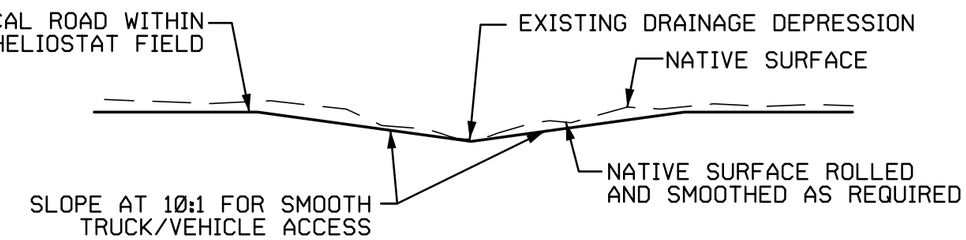

ROAD CROSSINGS OF MINOR DEPRESSIONS

(TYP SECTION OF ROAD CROSSINGS OF MINOR
DEPRESSION WITHIN HELIOSTAT FIELD)
N.T.S

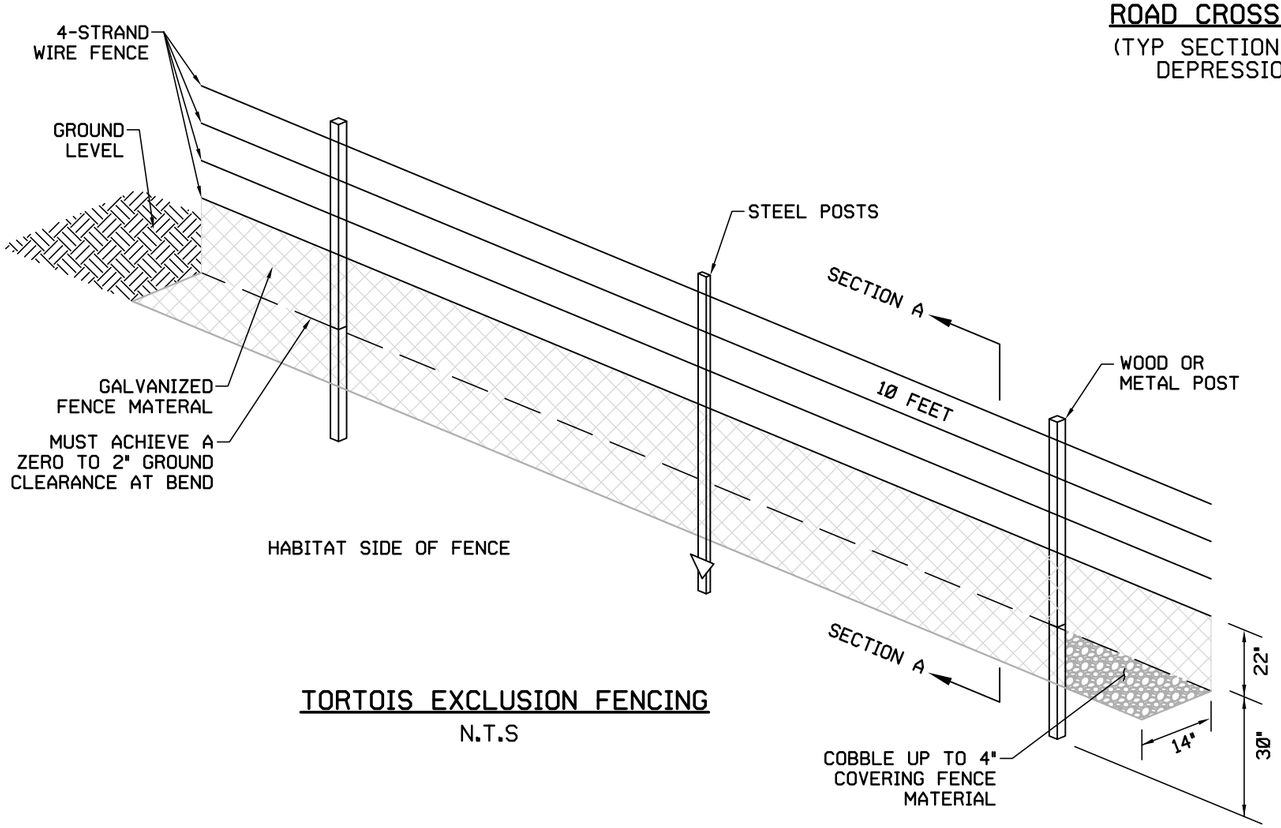

TORTOIS EXCLUSION FENCING

N.T.S

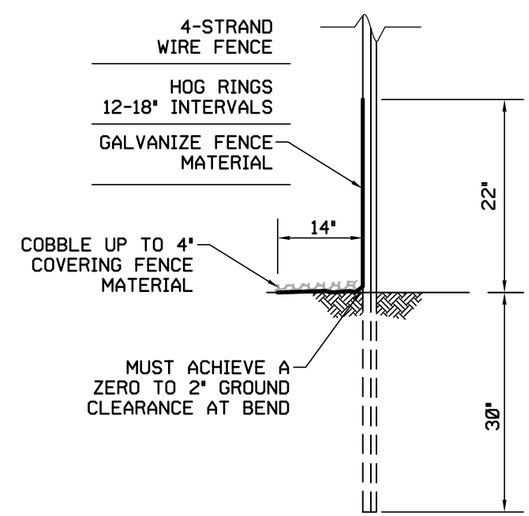

SECTION A

PRELIMINARY
NOT FOR CONSTRUCTION

REV	DATE	DESCRIPTION	DRAWN	CHECKED	LEAD DESIGNER	ENGINEER/TECH SPEC	PROJECT ENGINEER	PROJECT MANAGER
A	06 21 11	ISSUED FOR PERMITTING	PM	JB	PM	JB	JB	JB	DA

PRELIMINARY STATUS — DATE — REPRESENTS GENERAL DESIGN CONCEPTS BASED ON ASSUMPTIONS. REVIEWED NOT CHECKED.
APPROVED STATUS — DATE — REPRESENTS REVIEWED AND APPROVED DESIGN. ANY PORTION MARKED "HOLD" RETAINS PRELIMINARY STATUS.

ORIGINATING PERSONNEL
DRAWN BY: P. McKENNA
CHECKED BY: J. BRAVO
LEAD DESIGNER: P. McKENNA
ENGINEER/TECH SPECIALIST: J. BRAVO
PROJECT ENGINEERING MANAGER: J. BRAVO
PROJECT MANAGER: B. ANDERS

PROFESSIONAL ENGINEER'S SEAL

Zero Harm — Leadership, No Incidents, Safe Behavior

WorleyParsons resources & energy

CLIENT/PROJECT TITLE: RICESOLAR

SWPPP/DESCP
CONCEPTUAL GRADING AND DRAINAGE PLANS
DETAILS

SCALE: NTS — DRAWING SIZE: 11" x 17"
WORLEYPARSONS DWG. NO.: SRRC-0-SK-112-716-004 — REV: A

SRRC-0-SK-112-716-004.dwg
21-Jun-2011 - 16:15

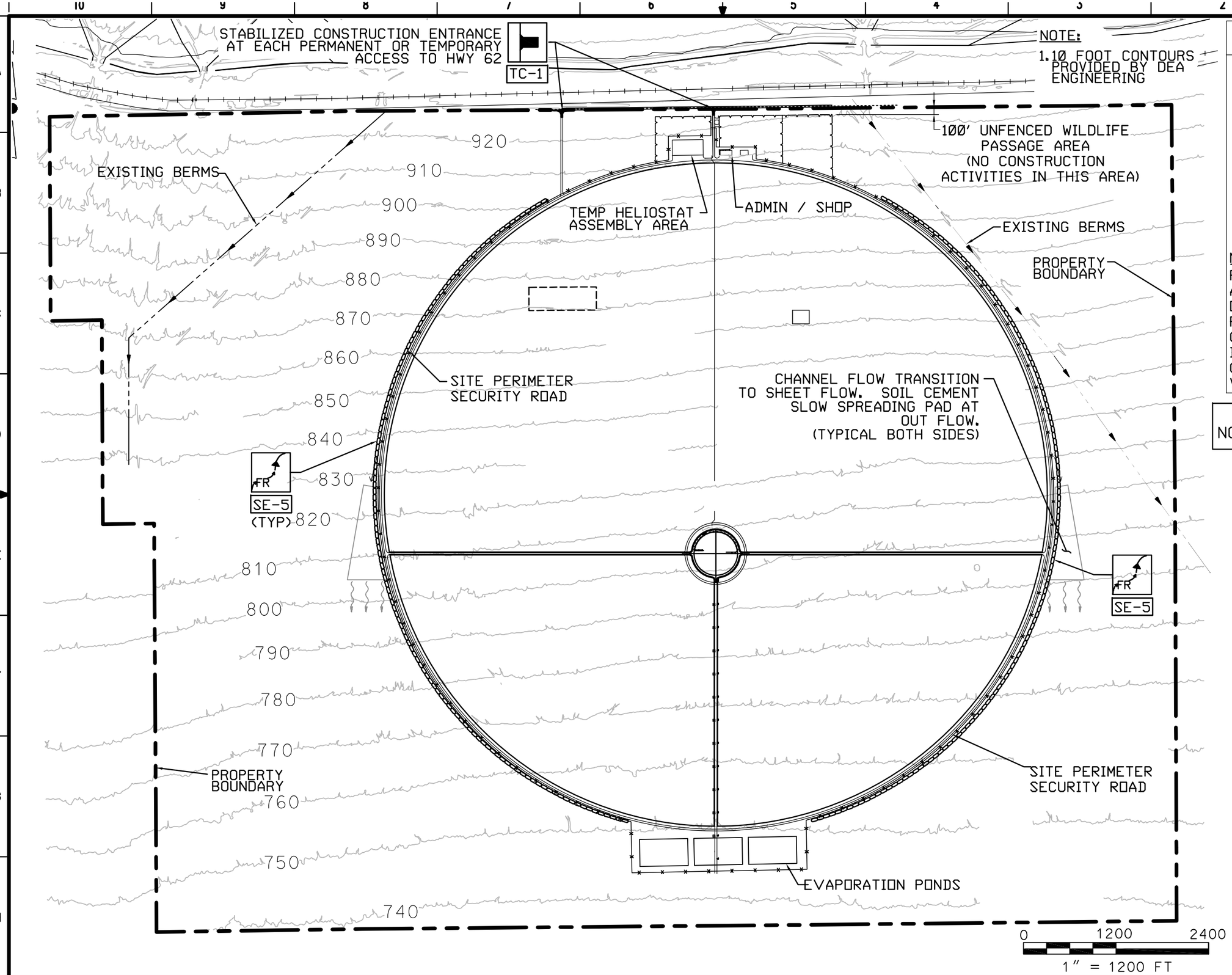

EROSION SEDIMENT CONTROL LEGEND

FR SE-5 — FIBER ROLLS

TC-1 — STABILIZED CONSTRUCTION ENTRANCE/EXIT

4" AGGREGATE BASE ON LAYDOWN AREAS

NOTE:
FOR FURTHER DETAIL AND DESCRIPTIONS OF THE BMP'S SHOWN, PLEASE REFER TO THE CALIFORNIA STORMWATER BMP HANDBOOK FOR CONSTRUCTION AT WWW.CABMPHANDBOOKS.COM

PRELIMINARY
NOT FOR CONSTRUCTION

REV	DATE	DESCRIPTION	DRAWN	CHECKED	LEAD DESIGNER	ENGINEER/TECH SPEC	LEAD DISC ENGINEER	PROJ ENGR MANAGER	PROJECT MANAGER
A	06 21 11	ISSUED FOR PERMITTING	PM	JB	PM	JB	JB	JB	BA

PRELIMINARY STATUS — DATE — REPRESENTS GENERAL DESIGN CONCEPTS BASED ON ASSUMPTIONS. REVIEWED NOT CHECKED.
L.DE

APPROVED STATUS — DATE — REPRESENTS REVIEWED AND APPROVED DESIGN. ANY PORTION MARKED "HOLD" RETAINS PRELIMINARY STATUS.
L.DE

ORIGINATING PERSONNEL
DRAWN BY: P. McKENNA
CHECKED BY: J. BRAVO
LEAD DESIGNER: P. McKENNA
ENGINEER/TECH SPECIALIST: J. BRAVO
PROJECT ENGINEERING MANAGER: J. BRAVO
PROJECT MANAGER: B. ANDERS

PROFESSIONAL ENGINEER'S SEAL

Zero Harm — Leadership No Incidents Safe Behavior

WorleyParsons resources & energy

CLIENT/PROJECT TITLE
RICESOLAR

SWPPP/DESCP
EROSION AND SEDIMENT CONTROL PLANS

SCALE 1"=1200' — DRAWING SIZE 11" x 17"
WORLEYPARSONS DWG. NO. SRRC-0-SK-112-716-005 — REV A

NOTES:

1. DROP STRUCTURE DETAIL IS SHOWN ON SHEET 005. THE DISTANCE BETWEEN EACH DROP STRUCTURE SHALL BE APPROXIMATELY 500 FT, WITH A DROP OF 5 FT. THEREFORE, THE SLOPE OF THE CHANNEL WILL BE APPROXIMATELY 1.0%

LEGEND:

492 EXISTING CONTOUR

CHANNEL CENTERLINE

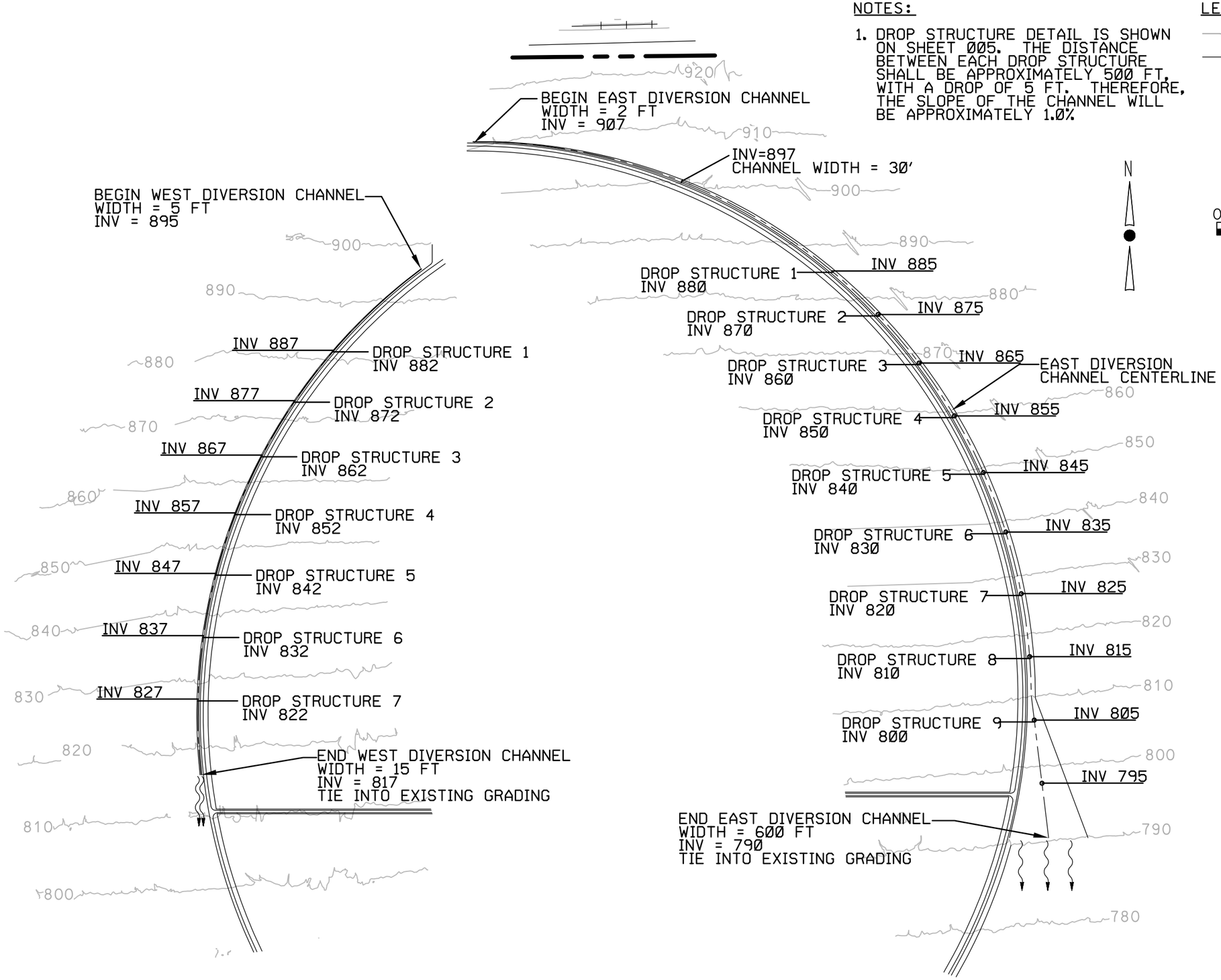

CONCEPTUAL GRADING FOR WEST DIVERSION CHANNEL
1" = 800'

CONCEPTUAL GRADING FOR EAST DIVERSION CHANNEL
1" = 800'

PRELIMINARY
NOT FOR CONSTRUCTION

REV	DATE	DESCRIPTION	DRAWN	CHECKED	LEAD DESIGNER	ENGINEER/TECH SPEC.	LEAD DISC. ENGINEER	PROJ. ENGR. MANAGER	PROJECT MANAGER
A	06 21 11	ISSUED FOR PERMITTING	PM	JB	PM	JB	JB	JB	BA

PRELIMINARY STATUS — DATE — REPRESENTS GENERAL DESIGN CONCEPTS BASED ON ASSUMPTIONS. REVIEWED NOT CHECKED.
LDE

APPROVED STATUS — DATE — REPRESENTS REVIEWED AND APPROVED DESIGN. ANY PORTION MARKED "HOLD" RETAINS PRELIMINARY STATUS.
LDE

ORIGINATING PERSONNEL

DRAWN BY: P. McKENNA
CHECKED BY: J. BRAVO
LEAD DESIGNER: P. McKENNA
ENGINEER/TECH SPECIALIST: J. BRAVO
PROJECT ENGINEERING MANAGER: J. BRAVO
PROJECT MANAGER: B. ANDERS

PROFESSIONAL ENGINEER'S SEAL

Zero Harm — Leadership, No Incidents, Safe Behavior

WorleyParsons resources & energy

CLIENT/PROJECT TITLE: RICESOLAR

SWPPP/DESCP
CONCEPTUAL GRADING AND DRAINAGE PLANS
DROP STRUCTURE LOCATIONS

SCALE: 1"=1600' — DRAWING SIZE: 11" x 17"

WORLEYPARSONS DWG. NO.: SRRC-0-SK-112-716-006 — REV: A

SRRC-0-SK-112-716-006.dwg
21-Jun-2011 - 1748

EROSION CONTROL NOTES

1. GENERAL

A. THE STATE'S GENERAL PERMIT FOR STORMWATER DISCHARGES ASSOCIATED WITH CONSTRUCTION ACTIVITY (WQD 99-080-DWQ) REQUIRES THE PREPARATION OF A STORMWATER POLLUTION PREVENTION PLAN (SWPPP) FOR SITES WITH SOIL DISTURBANCES GREATER THAN OR EQUAL TO ONE ACRE, OR FROM SITES SMALLER THAN ONE ACRE IF THE CONSTRUCTION ACTIVITY IS PART OF A LARGER PLAN OF DEVELOPMENT OR SALE THAT DISTURBS ONE ACRE OR MORE. CONSTRUCTION ACTIVITY SHALL NOT COMMENCE, NOR A PRE-CONSTRUCTION MEETING PERMITTED TO BE SCHEDULED, PRIOR TO THE SWPPP BEING ACCEPTED BY THE CBO.

B. THE PROJECT STORMWATER POLLUTION PREVENTION PLAN (SWPPP) IS INCORPORATED BY REFERENCE INTO THIS SET OF PLANS. THE SWPPP FOR THIS PROJECT IS STORM WATER POLLUTION PREVENTION PLAN RICE SOLAR ENERGY PROJECT.

C. A COPY OF THE SWPPP SHALL BE KEEP AT THE PROJECT SITE AT ALL TIMES.

D. THE CONTRACTOR WILL NOTIFY THE CBO IN WRITING AT LEAST TEN (10) DAYS PRIOR TO THE START OF CONSTRUCTION, AND OF COMPLETION OF THE PROJECT.

E. CONTRACTOR WILL PROVIDE THE CBO WITH A 24-HOUR EMERGENCY PHONE NUMBER PRIOR TO THE START OF WORK

F. BEFORE ANY EARTH MOVING ACTIVITIES COMMENCE, THE CONTRACTOR WILL APPOINT A QUALIFIED FIELD REPRESENTATIVE WHO IS TRAINED AND EXPERIENCED IN EROSION AND SEDIMENT CONTROL, AND WHO WILL BE RESPONSIBLE FOR THE PROPER CONSTRUCTION, STABILIZATION AND MAINTENANCE OF ALL EROSION AND SEDIMENTATION CONTROLS AND RELATED ITEMS INCLUDED WITHIN THIS PLAN. THE CONTRACTOR WILL PROVIDE THE NAME AND PHONE NUMBER OF THE FIELD REPRESENTATIVE TO THE CBO.

G. THE CONTRACTOR WILL DURING THE COURSE OF CONSTRUCTION PERFORM, CONSTRUCT, AND MAINTAIN SOIL EROSION AND SEDIMENT CONTROL MEASURES IN ACCORDANCE WITH THE STANDARDS FOR SOIL EROSION AND SEDIMENTATION CONTROL IN CALIFORNIA.

H. ALL EROSION AND SEDIMENT CONTROL MEASURES SHALL BE IMPLEMENTED BY OCTOBER 1ST OR AS APPROVED BY THE CBO AND SPECIFIED ON THE GRADING PLANS.

I. CONSTRUCTION ACTIVITIES OCCURRING BETWEEN OCTOBER 1 AND MAY 31 SHALL HAVE EROSION AND SEDIMENT CONTROL MEASURES IN PLACE OR CAPABLE OF BEING PLACED WITHIN 24 HOURS. THE CONTRACTOR SHALL ENSURE THAT THE CONSTRUCTION SITE IS PREPARED PRIOR TO THE ONSET OF ANY STORM.

J. THE CONTRACTOR SHALL ESTABLISH A SPECIFIC SITE WITHIN THE DEVELOPMENT FOR MAINTENANCE AND STORAGE OF EQUIPMENT OR ANY OTHER ACTIVITY THAT MAY ADVERSELY CONTRIBUTE TO THE WATER QUALITY OF THE RUNOFF. THIS AREA SHALL HAVE A BERM LOCATED AROUND ITS PERIMETER. THIS AREA SHALL BE RESTORED TO ACCEPTABLE CONDITION UPON COMPLETION OF PROJECT.

K. THE CONTRACTOR WILL STAGE WORK TO MINIMIZE THE EXTENT AND DURATION OF THE DISTURBANCE DURING CONSTRUCTION.

L. THE CONTRACTOR WILL SATISFACTORILY REMOVE AND DISPOSE OF CONSTRUCTION SURPLUS AND WASTE MATERIALS OFF THE PROJECT SITE, WHICH ARE NOT TO REMAIN IN PLACE OR TO BE USED IN THE CONSTRUCTION. WHEREVER POSSIBLE AND FEASIBLE, EXCESS MATERIALS WILL BE RECYCLED.

M. THIS SOIL EROSION AND SEDIMENT POLLUTION CONTROL PLAN WILL BE AVAILABLE FOR REVIEW AND INSPECTION BY THE CBO AT THE PROJECT DURING ALL STAGES OF THE EARTH DISTURBANCE ACTIVITY. THIS PLAN WILL BE RETAINED AT THE SITE ADMINISTRATIVE OFFICES.

N. THE CONTRACTOR WILL BE ADVISED TO BECOME THOROUGHLY FAMILIAR WITH THE PROVISIONS OF THE CALIFORNIA STORMWATER QUALITY ASSOCIATION (CASQA) BEST MANAGEMENT PRACTICES (BMP) HANDBOOK FOR CONSTRUCTION.

2TEMPORARY CONTROL MEASURES

A. STABILIZED CONSTRUCTION ENTRANCE/EXIT (BMP TR-1) WITH ENTRANCE/OUTLET TIRE WASH (BMP TR-3) TO REDUCE OR ELIMINATE THE TRACKING OF MUD AND DIRT ONTO PUBLIC ROADWAYS.

B. STABILIZED CONSTRUCTION ROADWAYS (BMP TR-2) SURFACED WITH COARSE AGGREGATE TO PROTECT AGAINST EROSION AND DUST.

C. TEMPORARY CONSTRUCTION LAYDOWN AREAS SURFACED WITH COARSE AGGREGATE TO PROTECT AGAINST EROSION.

D. STRAW MULCH (BMP EC-6) TO PROVIDE TEMPORARY PROTECTION AGAINST EROSION FOR DISTURBED SOIL AREAS.

E. GEOTEXTILES AND MATS (BMP EC-7) TO COVER SOIL SURFACE TO PROTECT AGAINST EROSION.

F. TEMPORARY DRAINAGE SWALES (BMP EC-9) STABILIZED WITH EROSION CONTROL MAT (BMP EC-7) TO INTERCEPT AND CONVEY RUNOFF FROM DISTURBED AREAS INTO SEDIMENT BASINS OR TRAPS.

G. DUST PALLIATIVES WILL BE APPLIED TO BARE SOIL FOR EROSION AND SEDIMENT CONTROL. THE APPLICATION RATE WILL BE DETERMINED PRIOR TO START OF CONSTRUCTION.

H. SILT FENCE (BMP SE-1) TO INTERCEPT AND DETAIN SEDIMENT-LADEN RUNOFF FROM THE SITE, AND PROMOTING SEDIMENTATION BEHIND THE FENCE.

I. SEDIMENT BASINS (BMP SE-2) AND SEDIMENT TRAPS (BMP SE-3) TO INTERCEPT SEDIMENT LADEN RUNOFF AND TO RETAIN THE SEDIMENT IN ORDER TO PROTECT DRAINAGEWAYS, PROPERTIES AND RIGHTS OF WAY BELOW THE SEDIMENT BASIN OR TRAP FROM SEDIMENTATION.

J. STREET SWEEPING AND VACUUMING (BMP SE-7) ANYWHERE SEDIMENT IS TRACKED FROM THE PROJECT SITE ONTO PUBLIC OR PRIVATE PAVED STREETS AND ROADS, TYPICALLY AT POINTS OF EGRESS. SWEEPING AND VACUUMING ARE ALSO APPLICABLE DURING PREPARATION OF PAVED SURFACES FOR FINAL PAVING.

K. NOT USED

L. NOT USED

M. IMMEDIATE APPLICATION OF DUST PALLIATIVE AND/OR MULCHING WITH STRAW (BMP EC-6) OR EROSION CONTROL BLANKETS (BMP EC-7) OF ALL AREAS THAT WILL REMAIN EXPOSED LONGER THAN 20 DAYS TO TEMPORARILY STABILIZE THE SOIL AND REDUCE DAMAGE FROM EROSION, SEDIMENT DEPOSITION AND RUNOFF TO DOWN-GRADIENT AREAS.

N. DEWATERING OF EXCAVATIONS WITH DEWATERING PUMPS THAT WILL DISCHARGE INTO TEMPORARY DRAINAGE SWALES (BMP EC-9) AND CONVEYED INTO SEDIMENT BASINS.

PERMANENT CONTROL MEASURES

A. PLANT ACCESS AND PRIMARY AND SECONDARY PLANT ROADWAYS PAVED WITH PERMANENT AGGREGATE SURFACING WITHIN THE POWER BLOCK.

B. AGGREGATE SURFACING.

C. NOT USED

D. STORM DRAINAGE SYSTEM, DIVERSION DITCHES, AND EVAPORATION AREAS ARE DESIGNED TO COLLECT STORM WATER RUNOFF FROM THE 100-YEAR FREQUENCY DESIGN STORM FROM THE SITE AND ACCESS ROADS.

E. PAVED ACCESS ROADS WILL BE PROTECTED FROM FLOODS VIA DITCHES AND CULVERTS AND RIP RAP OR OTHER STABILIZED MEANS ON THE SHOULDERS/SLOPES.

4. SOIL STABILIZATION METHODS: COMMISSIONER'S OFFICE.) THE PROJECT SCHEDULE WILL SEQUENCE CONSTRUCTION ACTIVITIES WITH THE INSTALLATION OF BOTH SOIL STABILIZATION AND SEDIMENT CONTROL MEASURES. THE CONSTRUCTION SCHEDULE WILL BE ARRANGED AS MUCH AS PRACTICABLE TO LEAVE EXISTING VEGETATION UNDISTURBED UNTIL IMMEDIATLY PRIOR TO GRADING. BMP'S EC-1 AND EC-2.

CIRCUMSTANCE	MATERIAL	APPLICATION RATE
	TEMPORARY STABILIZATION	
• SHORT TERM OR COLD WEATHER:	1. STRAW MULCH WITH MULCH CONTROL NETTING.	2 TONS / ACRE
• LONG TERM:	1. DUST PALLIATIVE OVER BARE SOIL.	RATE TBD
	2. STRAW MULCH WITH MULCH CONTROL NETTING.	2 TONS / ACRE
	3. HYDRAULIC MULCH WITH MULCH CONTROL NETTING.	(BMP EC-3)
• TEMPORARY SLOPE PROTECTION	1. EROSION CONTROL MULCH BLANKET	
	2. STRAW MULCH WITH MULCH CONTROL NETTING	2 TONS / ACRE
	PERMANENT STABILIZATION	
	1. DUST PALLIATIVE	TBD
• MULCH	1. STRAW MULCH WITH MULCH CONTROL NETTING.	2 TONS / ACRE
	2. HYDRAULIC MULCH	
• GRAVEL SURFACING	1. 4-6 INCH THICKNESS AGGREGATE BASE CLASS 2 AS SHOWN ON PLANS UNDERLAID WITH GEOTEXTILE FABRIC.	

5. MAINTENANCE

A. THE CONTRACTOR WILL BE RESPONSIBLE FOR THE PROPER CONSTRUCTION, STABILIZATION AND MAINTENANCE OF ALL TEMPORARY AND PERMANENT EROSION AND SEDIMENTATION POLLUTION CONTROLS AND RELATED ITEMS INCLUDED WITHIN THIS PLAN, UNTIL ACCEPTANCE BY SOLAR RESERVE. BEYOND THAT TIME, SOLAR RESERVE WILL BE RESPONSIBLE FOR THE MAINTENANCE AND REPAIR OF THE SAME.

B. VISUAL INSPECTIONS WILL BE CONDUCTED PRIOR TO FORECAST RAIN, DAILY DURING EXTENDED RAIN EVENTS, AFTER EACH RAIN EVENT, WEEKLY DURING THE RAINY SEASON AND TWO WEEK INTERVALS DURING NON-RAINY SEASON DURING CONSTRUCTION BY THE CONTRACTOR'S FIELD REPRESENTATIVE TO ASCERTAIN THAT EROSION AND SEDIMENT CONTROL MEASURES ARE OPERATIONAL AND EFFECTIVE IN PREVENTING POLLUTION TO DRAINAGE WAYS, PROPERTIES AND RIGHTS OF WAYS DOWNGRADIENT OF THE SITE. A WRITTEN REPORT OF EACH INSPECTION WILL BE KEPT, AND WILL INCLUDE:

1. A SUMMARY OF SITE CONDITIONS, EROSION AND SEDIMENT POLLUTION CONTROL MEASURES, AND COMPLIANCE.

2. THE DATE, TIME, AND NAME OF THE PERSON CONDUCTING THE INSPECTION.

C. AT THE END OF EACH CONSTRUCTION DAY, ALL SEDIMENT DEPOSITED ON PUBLIC ROADWAYS WILL BE REMOVED AND RETURNED TO THE CONSTRUCTION SITE. WASHING OF ROADWAYS IS NOT PERMITTED.

D. SEDIMENT AND TRASH ACCUMULATED IN DRAINAGES OR DETENTION BASINS WILL BE REMOVED AS SOON AS POSSIBLE. IN ADDITION, OIL AND MATERIAL FLOATING ON WATER SURFACE WILL BE SKIMMED WEEKLY AND THE DEBRIS PROPERLY DISPOSED OF.

E. REPAIR AND/OR REPLACE FACILITIES AS REQUIRED.

F. REGRADE AND MULCH ANY AREAS THAT BECOME DAMAGED BY RILL AND EROSION.

G. SHOULD UNFORESEEN EROSIVE CONDITIONS DEVELOP DURING CONSTRUCTION; THE CONTRACTOR WILL TAKE ACTION TO REMEDY SUCH CONDITIONS AND TO PREVENT DAMAGE TO ADJACENT PROPERTIES AS A RESULT OF INCREASED RUNOFF AND/OR SEDIMENT DISPLACEMENT. STOCKPILES OF WOOD CHIPS, HAY BALES, CRUSHED STONE AND OTHER MULCHES WILL BE HELD IN READINESS TO DEAL IMMEDIATELY WITH EMERGENCY PROBLEMS OF EROSION.

6. EROSION AND SEDIMENT CONTROL AND STABILIZATION PLAN NOTES

A. EROSION AND SEDIMENTATION BMP CONTROLS WILL BE CONSTRUCTED, STABILIZED, AND FUNCTIONAL BEFORE SITE DISTURBANCE WITHIN THE TRIBUTARY AREAS OF THOSE CONTROLS.

B. AFTER FINAL SITE STABILIZATION HAS BEEN ACHIEVED, TEMPORARY EROSION AND SEDIMENT POLLUTION CONTROLS WILL BE REMOVED. AREAS DISTURBED DURING THE REMOVAL OF THE BMP CONTROLS WILL BE STABILIZED IMMEDIATELY.

C. SEDIMENT WILL BE REMOVED FROM THE SILT FENCE WHEN ACCUMULATIONS REACH 1/2 THE ABOVEGROUND HEIGHT OF THE SILT FENCE.

D. ANY SILT FENCE THAT HAS BEEN UNDERMINED OR TOPPED WILL BE IMMEDIATELY REPLACED.

F. STORM INLETS WILL BE PROTECTED WITH STORM DRAIN INLET PROTECTION UNTIL TRIBUTARY AREAS ARE STABILIZED.

G. SEDIMENT WILL BE REMOVED FROM INLET PROTECTION AFTER EACH STORM EVENT.

H. TEMPORARY CONSTRUCTION DRAINAGE WILL CONSIST OF TEMPORARY DRAINAGE SWALES THAT CONVEY RUNOFF TO THE SEDIMENT BASINS THAT WILL BE DEWATERED UTILIZING CONVENTIONAL PORTABLE DEWATERING PUMPS EQUIPPED WITH INTAKE AND DISCHARGE HOSES THAT DISCHARGE VIA OVERLAND FLOW.

I. ANY RAIN WATER OR SURFACE AND PERCHED WATER RUNOFF THAT ACCUMULATE IN THE OPEN EXCAVATION WILL BE DEWATERED AS NECESSARY TO KEEP SOIL MATERIALS SUFFICIENTLY DRY. CONVENTIONAL PORTABLE DEWATERING PUMPS EQUIPPED WITH INTAKE AND DISCHARGE HOSES WILL BE UTILIZED TO DEWATER THE EXCAVATION. WHEN NEEDED THE DISCHARGE HOSES WILL BE LAID ACROSS THE STABLED CONSTRUCTION ROADWAYS AND EMPTY INTO THE TEMPORARY DRAINAGE SWALES.

J. ANY DISTURBED AREA ON WHICH ACTIVITY HAS CEASED AND WHICH WILL REMAIN EXPOSED FOR MORE THAN 20 DAYS WILL BE STABILIZED IMMEDIATELY. MULCH OR DUST PALLIATIVE WILL BE APPLIED AT THE RECOMMENDED RATES.

K. SWALES, CHANNELS AND SOIL STOCKPILES WILL BE STABILIZED IMMEDIATELY.

L. STRAW MULCH WILL BE APPLIED AT RATES OF AT LEAST 2 TONS PER ACRE. FOR SLOPES 4H:1V OR STEEPER, STRAW WILL BE PRESSED IN PLACE. OTHER METHODS MUST BE APPROVED BY THE ENGINEERING DIVISION.

M. SLOPES STEEPER THAN 4:1 AND ADJACENT TO COUNTY RIGHT OF WAY, FLOOD PLAINS, OR NATURAL DRAINAGES, WILL BE STABILIZED WITH MULCH.

N. ALL BARE AREAS, REGARDLESS OF SLOPE, WITHIN 50 FEET OF NATURAL DRAINAGES WILL BE COVERED WITH STRAW AND PRESSED IN PLACE.

O. NO GRADING OR TRENCHING, EXCEPT AS REQUIRED FOR EROSION OR SEDIMENT CONTROL, WILL OCCUR WITHIN 35 FEET FROM THE CENTERLINE OF PERENNIAL AND INTERMITTENT DRAINAGE SWALES BETWEEN OCTOBER 1 AND MAY 31 EXCEPT AS APPROVED BY THE DEPARTMENT OF FISH AND GAME.

P. UNTIL THE SITE IS STABILIZED, ALL EROSION AND SEDIMENT POLLUTION BMP CONTROLS WILL BE MAINTAINED PROPERLY. MAINTENANCE WILL INCLUDE INSPECTIONS OF ALL EROSION AND SEDIMENT BMP CONTROL DEVICES AFTER EACH RUNOFF EVENT AND ON A WEEKLY BASIS. ALL PREVENTATIVE AND REMEDIAL MAINTENANCE WORK, INCLUDING CLEAN OUT, REPAIR, REPLACEMENT, REGRADING, RESEEDING, REMULCHING, AND RENETTING, WILL BE PERFORMED IMMEDIATELY. IF EROSION AND SEDIMENTATION CONTROL BMPS FAIL TO PERFORM AS EXPECTED, REPLACEMENT BMPS OR MODIFICATION OF THOSE INSTALLED WILL BE REQUIRED.

J. AFTER THE COMPLETION OF CONSTRUCTION, RESTORE THE CONSTRUCTION TRAILERS, PARKING, AND LAYDOWN AREA.

1. PLOW AND MIX ALL TEMPORARY AGGREGATE SURFACING INTO THE TOPSOIL.

2. SPREAD EXCESS SOIL MATERIAL NOT INCORPORATED INTO THE WORK IN A UNIFORM LAYER OVER THE AREA.

3. FINE GRADE THE AREA TO PROVIDE POSITIVE DRAINAGE.

4. PERMANENTLY MULCH THE DISTURBED AREA OR APPLY DUST PALLIATIVES.

K. AFTER FINAL SITE STABILIZATION HAS BEEN ACHIEVED, ALL REMAINING TEMPORARY EROSION AND SEDIMENT POLLUTION CONTROL FACILITIES WILL BE REMOVED. AREAS DISTURBED DURING REMOVAL OF THE CONTROLS WILL BE STABILIZED IMMEDIATELY.

L. SHOULD ANY MEASURES CONTAINED WITHIN THIS PLAN PROVE INCAPABLE OF ADEQUATELY REMOVING SEDIMENT FROM ON-SITE FLOWS PRIOR TO DISCHARGE OR OF STABILIZING THE SURFACES INVOLVED, ADDITIONAL MEASURES WILL BE IMMEDIATELY IMPLEMENTED BY THE CONTRACTOR TO ELIMINATE ALL SUCH PROBLEMS.

7. CONSTRUCTION SEQUENCE

MAIN PLANT AREA AND CONSTRUCTION FACILITIES AREA

A. EROSION AND SEDIMENTATION CONTROLS WILL BE CONSTRUCTED, STABILIZED AND FUNCTIONAL BEFORE GENERAL SITE DISTURBANCE WITHIN THE TRIBUTARY AREA TO THOSE CONTROLS COMMENCE, AS FOLLOWS:

1. INSTALL STABILIZED CONSTRUCTION ENTRANCE/EXIT.

2. HAVE STREET SWEEPING EQUIPMENT IN PLACE TO CLEAN ANY CARRYOVER FROM THE CONSTRUCTION ENTRANCE/EXIT.

B. CLEAR AND GRUB SITE, STRIP UPPER 6-INCHES OF TOPSOIL AND STOCKPILE SEPARATELY.

1. SEPARATE DEEPER TOPSOILS FROM OTHER EXCAVATED MATERIAL AND STOCKPILE AT DESIGNATED AREAS ON SITE.

C. INSTALL TEMPORARY CONSTRUCTION FACILITIES.

1. TEMPORARY CONSTRUCTION OFFICES.

2. CONSTRUCTION LAYDOWN AREA.

3. CONSTRUCTION PARKING.

4. STABILIZE WHERE NEEDED, PLACE COARSE AGGREGATE SURFACING TO 6-INCH THICKNESS IN THE TEMPORARY CONSTRUCTION FACILITY AREAS WITHOUT STRIPPING SOIL.

D. INSTALL THE STORM DRAINAGE SYSTEM FEATURES.

E. EXCAVATE AND FILL ACCESS RD., PERIMETER RD. AND CENTER RD. TO ROUGH GRADE ELEVATIONS.

1. USE SOIL MATERIAL FROM SOIL STRUCTURAL FILL STOCKPILE FOR FILL.

2. PLACE SOIL IN LIFTS, MOISTURE CONDITION AND COMPACT.

F. CONSTRUCT PERMANENT STORM DRAIN SYSTEM FOR SITE.

1. INSTALL STORM DRAIN INLET PROTECTION AS CONSTRUCTION OF EACH STORM INLET IS COMPLETED.

G. GRADE ROADWAYS AND SHOULDERS, MATERIAL STORAGE AND MOBILE OFFICE TO FINAL SUBGRADE ELEVATION.

H. INSTALL AGGREGATE SURFACING FOR GRAVEL ROADWAYS OVER GEOTEXTILE FABRIC.

I. PERMANENTLY MULCH ALL AREAS NOT SCHEDULED TO RECEIVE AGGREGATE SURFACING OR PAVING.

PRELIMINARY
NOT FOR CONSTRUCTION

REV	DATE	DESCRIPTION	DRAWN	CHECKED	LEAD DESIGNER	ENGINEER/TECH SPEC	LEAD DISC ENGINEER	PROJ ENGR MANAGER	PROJECT MANAGER
A	05 21 11	ISSUED FOR PERMITTING	PM	JB	PM	JB	JB	JB	BA

PRELIMINARY STATUS DATE LDE — REPRESENTS GENERAL DESIGN CONCEPTS BASED ON ASSUMPTIONS. REVIEWED NOT CHECKED.

APPROVED STATUS DATE LDE — REPRESENTS REVIEWED AND APPROVED DESIGN. ANY PORTION MARKED 'HOLD' RETAINS PRELIMINARY STATUS.

ORIGINATING PERSONNEL — PROFESSIONAL ENGINEER'S SEAL

DRAWN BY: P. McKENNA
CHECKED BY: J. BRAVO
LEAD DESIGNER: P. McKENNA
ENGINEER/TECH SPECIALIST: J. BRAVO
PROJECT ENGINEERING MANAGER: J. BRAVO
PROJECT MANAGER: B. ANDERS

Zero Harm — Leadership, No Incidents, Safe Behavior

ORIGINALLY PREPARED UNDER THE RESPONSIBLE SUPERVISION OF
PE: ______ STATE: ______
LIC. NO.: ______ DATED: ______

WorleyParsons
resources & energy

CLIENT/PROJECT TITLE
RICESOLAR

SWPPP/DESCP
EROSION CONTROL GENERAL NOTES

SCALE: NTS
DRAWING SIZE: 11" x 17"
WORLEYPARSONS DWG. NO.: SRRC-0-SK-112-716-007
REV: A

SRRC-0-SK-112-716-007.dwg
21-Jun-2011 - 17:23

LEGEND

- CHAIN LINK FENCING
- ELECTRICAL TRANSMISSION LINE
- OWNERSHIP BOUNDARY
- DESERT TORTOISE CLEARING PHASE BOUNDARY

NOTES

1. NORTHING AND EASTING COORDINATES BASED ON CALIFORNIA NAD83 ZONE VI COORDINATE SYSTEM.
2. THE PARKING AND LAYDOWN AREAS SHOWN ARE LABELED "OFF-SITE" BECASUE THEY ARE LOCATED OUTSIDE THE PERMANENT FENCE LINE AND THE PERMANENT FACILITIES. ADDITIONAL PARKING AND LAYDOWN WILL BE USED WITHIN THE HELIOSTAT FIELD AND POWER BLOCK AREA, BUT ARE NOT SHOWN.

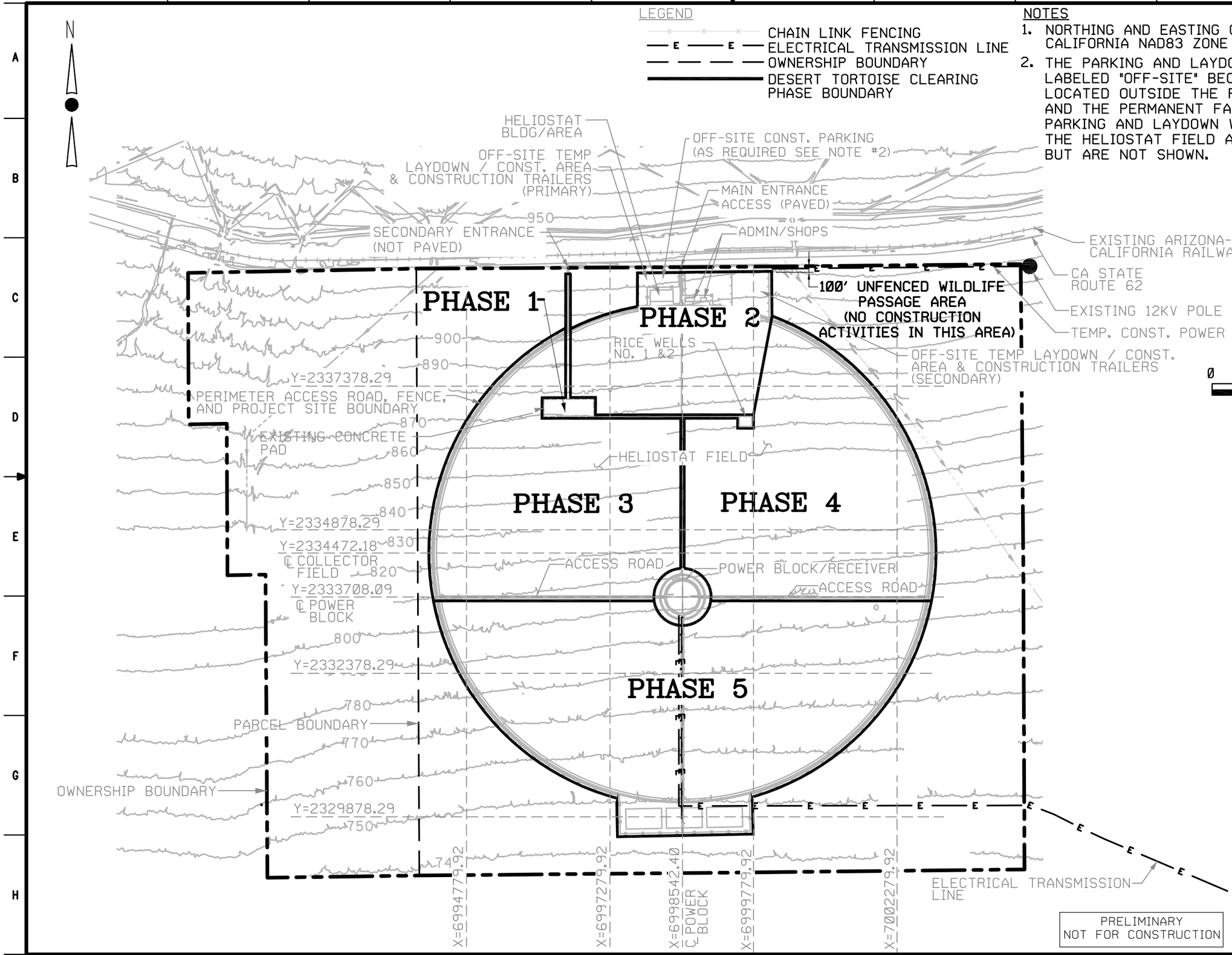

PRELIMINARY
NOT FOR CONSTRUCTION

REV	DATE	DESCRIPTION	DRAWN	CHECKED	LEAD DESIGNER	ENGINEER/TECH SPEC	PROJECT ENGINEER	PROJECT MANAGER
A	06/21/11	ISSUED FOR PERMITTING	PM	JB	PM	JB	JB	JB	DA

PRELIMINARY STATUS — DATE — REPRESENTS GENERAL DESIGN CONCEPTS BASED ON ASSUMPTIONS. REVIEWED NOT CHECKED.
LED

APPROVED STATUS — DATE — REPRESENTS REVIEWED AND APPROVED DESIGN. ANY PORTION MARKED "HOLD" RETAINS PRELIMINARY STATUS.
LDE

ORIGINATING PERSONNEL
DRAWN BY: P. McKENNA
CHECKED BY: J. BRAVO
LEAD DESIGNER: P. McKENNA
ENGINEER/TECH SPECIALIST: J. BRAVO
PROJECT ENGINEERING MANAGER: J. BRAVO
PROJECT MANAGER: B. ANDERS

PROFESSIONAL ENGINEER'S SEAL

Zero Harm — Leadership, No Incidents, Safe Behavior

WorleyParsons resources & energy

CLIENT/PROJECT TITLE: RICESOLAR

SWPPP/DESCP
DESERT TORTOISE
CLEARING PHASE

SCALE: 1"=1200' — DRAWING SIZE: 11" x 17"

WORLEYPARSONS DWG. NO.: SRRC-0-SK-112-716-008 — REV: A

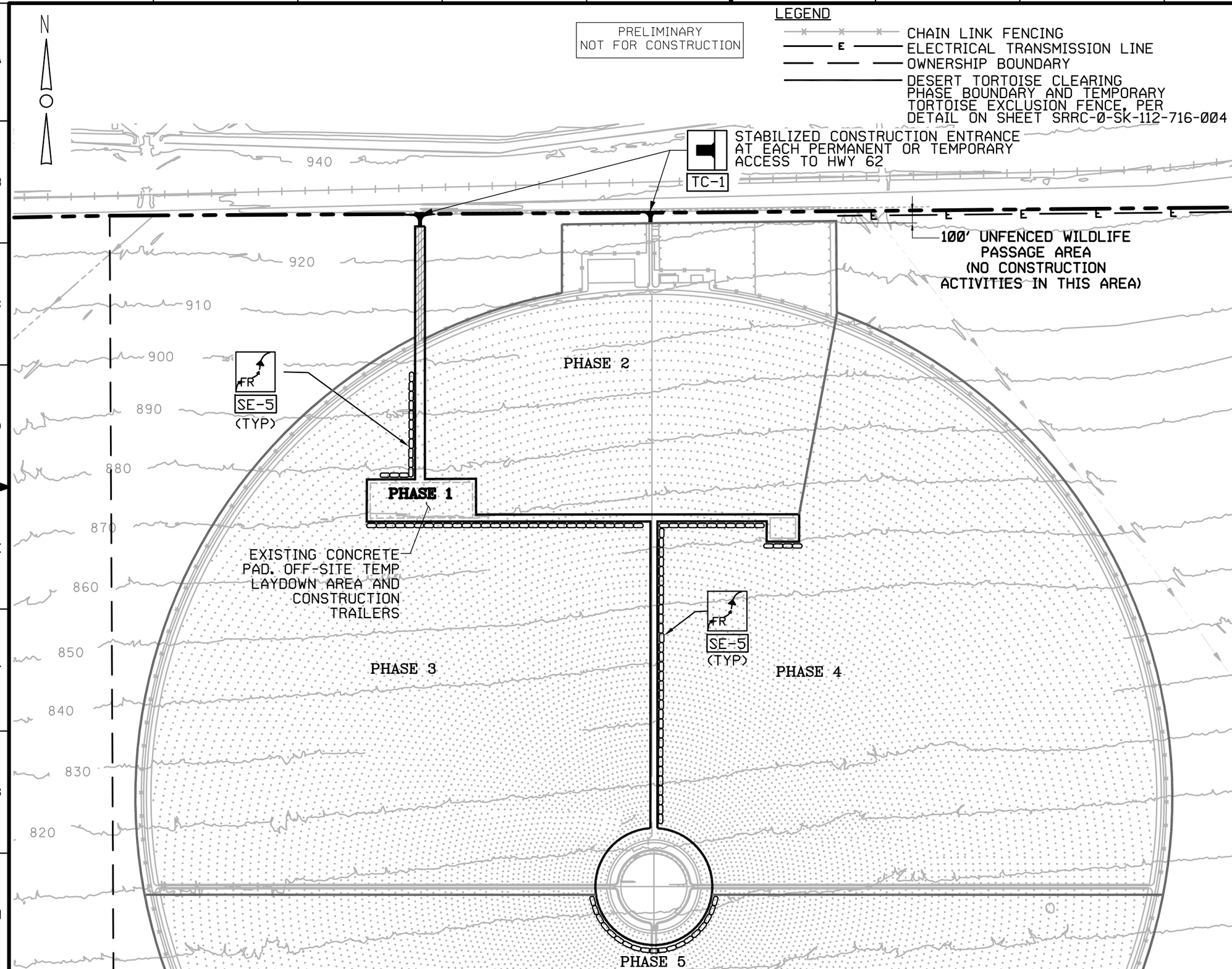

EROSION SEDIMENT CONTROL LEGEND

FR SE-5 — FIBER ROLLS

TC-1 — STABILIZED CONSTRUCTION ENTRANCE/EXIT

4" AGGREGATE BASE ON LAYDOWN AREAS

NOTE:
FOR FURTHER DETAIL AND DESCRIPTIONS OF THE BMP'S SHOWN, PLEASE REFER TO THE CALIFORNIA STORMWATER BMP HANDBOOK FOR CONSTRUCTION AT WWW.CABMPHANDBOOKS.COM

REV	DATE	DESCRIPTION	DRAWN	CHECKED	LEAD DESIGNER	ENGINEER/ TECH SPEC	LEAD DISC ENGINEER	PROJ ENGR MANAGER	PROJECT MANAGER
A	06 21 11	ISSUED FOR PERMITTING	PM	JB	PM	JB	JB	JB	DA

PRELIMINARY STATUS — DATE — REPRESENTS GENERAL DESIGN CONCEPTS BASED ON ASSUMPTIONS. REVIEWED NOT CHECKED.
LED

APPROVED STATUS — DATE — REPRESENTS REVIEWED AND APPROVED DESIGN. ANY PORTION MARKED "HOLD" RETAINS PRELIMINARY STATUS.
LDE

ORIGINATING PERSONNEL
DRAWN BY: P. McKENNA
CHECKED BY: J. BRAVO
LEAD DESIGNER: P. McKENNA
ENGINEER/TECH SPECIALIST: J. BRAVO
PROJECT ENGINEERING MANAGER: J. BRAVO
PROJECT MANAGER: B. ANDERS

PROFESSIONAL ENGINEER'S SEAL

Zero Harm — Leadership No Incidents Safe Behavior

WorleyParsons resources & energy

CLIENT/PROJECT TITLE
RICESOLAR

SWPPP/DESCP
EROSION CONTROL PLAN
DESERT TORTOISE CLEARING PHASE 1

SCALE: NTS — DRAWING SIZE: 11" x 17"
WORLEYPARSONS DWG. NO.: SRRC-0-SK-112-716-009 — REV: A

APPENDIX C – PRELIMINARY STORMWATER POLLUTION PREVENTION PLAN

Stormwater Pollution Prevention Plan to be provided in July 2011