Appendix 2A
Water Balance Diagrams

WorleyParsons

Calculation Cover Sheet

Customer	Rice Solar Energy, LLC
Project Title	Rice Solar Energy Project
Calculation Title	Water Balance Calculation
File Number	
Project File Location	

Rev	Date	By	Checked			
A	26-Jun-09	J. Linder	S. Stern			
B	16-Jul-09	J. Linder	S. Stern			
C	22-Jul-09	J. Linder	S. Stern			
D	20-Aug-09	S. Stern	B. Doar			
E	15-Sep-09	S. Stern	B. Doar			

NOTES:

1 Streams 25 & 26 not shown on Diagram

Stream No.	Stream Description	Case 1 Summer Peak 117°F DB 11.9% RH	Case 2 Summer Design 110°F DB 14.9% RH	Case 3 Summer Average 97°F DB 21.3% RH	Case 4 Annual Average 80°F DB 28.9% RH	Case 5 Shoulder Average 80°F DB DB 28.9% RH	Case 6 Winter Average 65°F DB 33.6% RH	Case 7 Winter Design 45°F DB 48.1% RH
		gpm H2O	gpm H2O	gpm H2O	gpm H2O	gpm H2O	gpm H2O	gpm H2O
1	Water Supply	226	225	224	223	223	220	215
2	RO Feed	212	212	212	212	212	212	212
3	1st Pass RO Product	159	159	159	159	159	159	159
4	1st Pass RO Reject	53.1	53.1	53.1	53.1	53.1	53.1	53.1
5	2nd Pass RO Product	143	143	143	143	143	143	143
6	2nd Pass RO Reject	16	16	16	16	16	16	16
7	EDI Product	129	129	129	129	129	129	129
8	EDI Reject	14	14	14	14	14	14	14
9	WetSAC Makeup (from SGBD)	34	33	32	31	31	28	23
10	WetSAC Evaporation	54	52	51	50	50	44	37
11	WetSAC Blowdown	14	13	13	13	13	11	9
12	Solar Field Mirror Wash	51	51	51	51	51	51	51
13	Steam Cycle Makeup	52	52	52	52	52	52	52
14	Steam Cycle Blowdown	52	52	52	52	52	52	52
15	Quench Water	26	26	26	26	26	26	26
16	Steam Cycle Blowdown Vent to Atmosphere	26	26	26	26	26	26	26
17	Steam Cycle Blowdown (Quenched)	52	52	52	52	52	52	52
18	Steam Cycle Liquid Blowdown to Evaporation Pond	18	20	20	21	21	25	29
19	WetSAC Drift	0.77	0.77	0.77	0.77	0.77	0.77	0.77
20	Service Water	5	5	5	5	5	5	5
21	Service Water / WetSAC Makeup	39	38	37	36	36	33	28
22	Domestic Water Use	5	5	5	5	5	5	5
23	WetSAC Makeup (from Raw Water)	34	33	32	31	31	28	23
24	Clarifier Product	53.0	53.0	53.0	53.0	53.0	53.0	53.0
25	Clarifier Chemicals Added	0.013	0.013	0.013	0.013	0.013	0.013	0.013
26	Clarifier Solids Slurry	0.10	0.10	0.10	0.10	0.10	0.10	0.10
27	Evaporation Pond Supply	90	91	91	91	91	94	96

CASE 1 - SUMMER PEAK																	
Flow rate (gpm)	226			256	212	159	53.1	143	16	129	14.3	33.8	54	14	51	52	52
Diagram Stream Number	**1**		**WSAC Feed**	**RAW**	**2**	**3**	**4**	**5**	**6**	**7**	**8**	**9**	**10**	**11**	**12**	**13**	**14**
Species	Water Supply	Conductivity Conversion	WetSAC Feed Water Chemistry	Raw/Fire Water Storage Tank	RO Feed	1st Pass RO Product	1st Pass RO Reject	2nd Pass RO Product	2nd Pass RO Reject	EDI Product	EDI Reject	WetSAC Makeup (from SGBD)	WetSAC Evaporation	WetSAC Blowdown	Solar Field Mirror Wash	Steam Cycle Makeup	Steam Cycle Blowdown
pH	8.25						5.0										
Specific Conductance (@ 25C), uS/cm	1290		724.26	1,448	1,448	19	5,735	0.59	188	0.056	5	0.20	0.055	3,621	0.056	0.056	0.20
TDS (ppm)	885		**386.54**	**773**	**773**	**10**	**3,061**	**0.286**	**100**	**0.001**	**3**	**0.080**	**0**	**1,933**	**0.001**	**0.001**	**0.080**
Calcium (as Ca) (ppm)	16	2.60	7.141	14.3	14.3	0.190	56.6	0.005	1.86	0.000	0.053	0.001	0	35.707	0.000	0.000	0.001
Magnesium (as Mg) (ppm)	0.97	3.82	0.459	0.9	0.92	0.012	3.64	0.000	0.12	0.000	0.003	0.000	0	2.297	0.000	0.000	0.000
Total Hardness (as CaCO3) (ppm)	44.0		19.589	39.2	39.2	0.522	155	0.015	5.1	0.000	0.145	0.004	0	97.946	0.000	0.000	0.004
Sodium (as Na) (ppm)	260	2.13	115.616	231.2	231	3.083	916	0.086	30	0.000	0.854	0.024	0	578.079	0.000	0.000	0.024
Potassium (as K) (ppm)	2.6	1.84	1.184	2.4	2.4	0.032	9.38	0.001	0.31	0.000	0.009	0.000	0	5.920	0.000	0.000	0.000
Streams 25 & 26 not represented on Water Ba	342	2.14	152.070	304.1	304	4.055	1204	0.113	40	0.000	1.124	0.031	0	760.352	0.000	0.000	0.031
Sulfate (as SO4) (ppm)	140	1.54	62.268	124.5	125	1.660	493	0.046	16.2	0.000	0.460	0.013	0	311.339	0.000	0.000	0.013
Reactive Silica (as SiO2) (ppm)	13.7	0.00	6.119	12.2	12.2	0.163	48.5	0.005	1.59	0.000	0.045	0.001	0	30.594	0.000	0.000	0.001
Total Silica (as SiO2) (ppm)	16		7.141	14.3	14.3	0.190	56.6	0.005	1.86	0.000	0.053	0.001	0	35.707	0.000	0.000	0.001
Total Alkalinity (as CaCO3 @ pH 4.3) (ppm)	69.2		30.792	61.6	61.6	0.821	244	0.023	8.0	0.000	0.227	0.006	0	153.962	0.000	0.000	0.006
Bicarbonate Alkalinity (as CaCO3) (ppm)	58.0	0.72	25.813	51.6	52	0.688	204	0.019	6.7	0.000	0.191	0.005	0	129.066	0.000	0.000	0.005
Carbonate Alkalinity (as CaCO3) (ppm)	11.2	2.82	5.007	10.0	10.0	0.134	39.7	0.004	1.30	0.000	0.037	0.001	0	25.037	0.000	0.000	0.001
Fluoride (as F) (ppm)	4.55	0.00	2.051	4.10	4.10	0.055	16.2	0.002	0.53	0.000	0.015	0.000	0	10.255	0.000	0.000	0.000
Nitrate (as N) (ppm)	2.70	1.15	1.229	2.46	2.46	0.033	9.7	0.001	0.32	0.000	0.009	0.000	0	6.143	0.000	0.000	0.000
Orthophosphate (as P) (ppm)	0.100		0.073	0.145	0.145	0.002	0.576	0.000	0.019	0.000	0.001	0.000	0	0.363	0.000	0.000	0.000
Phosphorous (as P) (ppm)	0.120		0.082	0.163	0.163	0.002	0.646	0.000	0.021	0.000	0.001	0.000	0	0.408	0.000	0.000	0.000
Iron (as Fe) (ppm)	0.13	0.00	0.086	0.172	0.172	0.002	0.681	0.000	0.022	0.000	0.001	0.000	0	0.430	0.000	0.000	0.000
Vanadium (as V) (ppm)	0.019		0.037	0.073	0.073	0.001	0.290	0.000	0.010	0.000	0.000	0.000	0	0.183	0.000	0.000	0.000
Chromium (as Cr) (ppm)	0.011		0.033	0.066	0.066	0.001	0.262	0.000	0.009	0.000	0.000	0.000	0	0.166	0.000	0.000	0.000
Zinc (as Zn) (ppm)	0.035		0.044	0.088	0.088	0.001	0.347	0.000	0.011	0.000	0.000	0.000	0	0.219	0.000	0.000	0.000
Molybdenum (as Mo) (ppm)	0.029		0.041	0.082	0.082	0.001	0.326	0.000	0.011	0.000	0.000	0.000	0	0.206	0.000	0.000	0.000
Barium (as Ba) (ppm)	0.030	0.00	0.042	0.083	0.083	0.001	0.329	0.000	0.011	0.000	0.000	0.000	0	0.208	0.000	0.000	0.000

CASE 7 - WINTER DESIGN																	
Flow rate (gpm)	215			245	212	159	53.1	143	16	129	14.3	23.1	37	9	51	52	52
Diagram Stream Number	**1**		**WSAC Feed**	**RAW**	**2**	**3**	**4**	**5**	**6**	**7**	**8**	**9**	**10**	**11**	**12**	**13**	**14**
Species	Water Supply	Conductivity Conversion	WetSAC Feed Water Chemistry	Raw/Fire Water Storage Tank	RO Feed	1st Pass RO Product	1st Pass RO Reject	2nd Pass RO Product	2nd Pass RO Reject	EDI Product	EDI Reject	WetSAC Makeup (from SGBD)	WetSAC Evaporation	WetSAC Blowdown	Solar Field Mirror Wash	Steam Cycle Makeup	Steam Cycle Blowdown
pH	8.25						5.0										
Specific Conductance (@ 25C), uS/cm	1290		720.34	1,440	1,440	19	5,704	0.59	187	0.056	5	0.20	0.055	3,601.48	0.056	0.056	0.20
TDS (ppm)	885		**384.46**	**769**	**769**	**10**	**3,045**	**0.285**	**100**	**0.001**	**3**	**0.079**	**0**	**1,922**	**0.001**	**0.001**	**0.079**
Calcium (as Ca) (ppm)	16	2.60	7.104	14.2	14.2	0.19	56.3	0.005	1.85	0.000	0.052	0.001	0	35.519	0.000	0.000	0.001
Magnesium (as Mg) (ppm)	0.97	3.82	0.458	0.9	0.92	0.01	3.63	0.000	0.12	0.000	0.003	0.000	0	2.292	0.000	0.000	0.000
Total Hardness (as CaCO3) (ppm)	44.0		19.484	39.0	39.0	0.52	154	0.014	5.1	0.000	0.144	0.004	0	97.419	0.000	0.000	0.004
Sodium (as Na) (ppm)	260	2.13	114.987	230.0	230	3.07	911	0.085	30	0.000	0.850	0.024	0	574.937	0.000	0.000	0.024
Potassium (as K) (ppm)	2.6	1.84	1.179	2.4	2.4	0.03	9.34	0.001	0.31	0.000	0.009	0.000	0	5.895	0.000	0.000	0.000
Chloride (as Cl) (ppm)	342	2.14	151.243	302.5	302	4.03	1198	0.112	39	0.000	1.117	0.031	0	756.217	0.000	0.000	0.031
Sulfate (as SO4) (ppm)	140	1.54	61.930	123.8	124	1.65	490	0.046	16.1	0.000	0.458	0.013	0	309.649	0.000	0.000	0.013
Reactive Silica (as SiO2) (ppm)	13.7	0.00	6.087	12.2	12.2	0.16	48.2	0.005	1.58	0.000	0.045	0.001	0	30.434	0.000	0.000	0.001
Total Silica (as SiO2) (ppm)	16		7.104	14.2	14.2	0.19	56.3	0.005	1.85	0.000	0.052	0.001	0	35.519	0.000	0.000	0.001
Total Alkalinity (as CaCO3 @ pH 4.3) (ppm)	69.2		30.626	61.2	61.2	0.82	243	0.023	8.0	0.000	0.226	0.006	0	153.130	0.000	0.000	0.006
Bicarbonate Alkalinity (as CaCO3) (ppm)	58.0	0.72	25.674	51.3	51	0.68	203	0.019	6.7	0.000	0.190	0.005	0	128.370	0.000	0.000	0.005
Carbonate Alkalinity (as CaCO3) (ppm)	11.2	2.82	4.981	10.0	10.0	0.13	39.4	0.004	1.30	0.000	0.037	0.001	0	24.907	0.000	0.000	0.001
Fluoride (as F) (ppm)	4.55	0.00	2.041	4.08	4.08	0.05	16.2	0.002	0.53	0.000	0.015	0.000	0	10.206	0.000	0.000	0.000
Nitrate (as N) (ppm)	2.70	1.15	1.223	2.45	2.45	0.03	9.7	0.001	0.32	0.000	0.009	0.000	0	6.116	0.000	0.000	0.000
Orthophosphate (as P) (ppm)	0.100		0.074	0.147	0.147	0.00	0.583	0.000	0.019	0.000	0.001	0.000	0	0.368	0.000	0.000	0.000
Phosphorous (as P) (ppm)	0.120		0.083	0.165	0.165	0.00	0.653	0.000	0.021	0.000	0.001	0.000	0	0.413	0.000	0.000	0.000
Iron (as Fe) (ppm)	0.13	0.00	0.087	0.174	0.174	0.00	0.688	0.000	0.023	0.000	0.001	0.000	0	0.435	0.000	0.000	0.000
Vanadium (as V) (ppm)	0.019		0.038	0.076	0.076	0.00	0.300	0.000	0.010	0.000	0.000	0.000	0	0.189	0.000	0.000	0.000
Chromium (as Cr) (ppm)	0.011		0.034	0.069	0.069	0.00	0.272	0.000	0.009	0.000	0.000	0.000	0	0.172	0.000	0.000	0.000
Zinc (as Zn) (ppm)	0.033		0.044	0.088	0.088	0.00	0.349	0.000	0.011	0.000	0.000	0.000	0	0.220	0.000	0.000	0.000
Molybdenum (as Mo) (ppm)	0.029		0.042	0.085	0.085	0.00	0.335	0.000	0.011	0.000	0.000	0.000	0	0.211	0.000	0.000	0.000
Barium (as Ba) (ppm)	0.03	0.00	0.043	0.085	0.085	0.00	0.338	0.000	0.011	0.000	0.000	0.000	0	0.214	0.000	0.000	0.000

CASE 4 - ANNUAL AVERAGE																	
Flow rate (gpm)	223			254	212	159	53.1	143	16	129	14.3	31.3	50	13	51	52	52
Diagram Stream Number	**1**		**WSAC Feed**	**RAW**	**2**	**3**	**4**	**5**	**6**	**7**	**8**	**9**	**10**	**11**	**12**	**13**	**14**
Species	Water Supply	Conductivity Conversion	WetSAC Feed Water Chemistry	Raw/Fire Water Storage Tank	RO Feed	1st Pass RO Product	1st Pass RO Reject	2nd Pass RO Product	2nd Pass RO Reject	EDI Product	EDI Reject	WetSAC Makeup (from SGBD)	WetSAC Evaporation	WetSAC Blowdown	Solar Field Mirror Wash	Steam Cycle Makeup	Steam Cycle Blowdown
pH	8.25						5.0										
Specific Conductance (@ 25C), uS/cm	1290		723.37	1,447	1,447	19	5,728	0.59	188	0.056	5	0.20	0.055	3,616.62	0.056	0.056	0.20
TDS (ppm)	885		**386.06**	**772**	**772**	**10**	**3,057**	**0.286**	**100**	**0.001**	**3**	**0.080**	**0**	**1,930**	**0.001**	**0.001**	**0.079**
Calcium (as Ca) (ppm)	16	2.60	7.133	14.3	14.3	0.19	56.5	0.005	1.85	0.000	0.053	0.001	0	35.664	0.000	0.000	0.001
Magnesium (as Mg) (ppm)	0.97	3.82	0.459	0.9	0.92	0.01	3.64	0.000	0.12	0.000	0.003	0.000	0	2.296	0.000	0.000	0.000
Total Hardness (as CaCO3) (ppm)	44.0		19.565	39.1	39.1	0.52	155	0.014	5.1	0.000	0.145	0.004	0	97.826	0.000	0.000	0.004
Sodium (as Na) (ppm)	260	2.13	115.473	230.9	231	3.08	914	0.086	30	0.000	0.853	0.024	0	577.364	0.000	0.000	0.024
Potassium (as K) (ppm)	2.6	1.84	1.183	2.4	2.4	0.03	9.37	0.001	0.31	0.000	0.009	0.000	0	5.915	0.000	0.000	0.000
Chloride (as Cl) (ppm)	342	2.14	151.882	303.7	304	4.05	1203	0.112	39	0.000	1.122	0.031	0	759.411	0.000	0.000	0.031
Sulfate (as SO4) (ppm)	140	1.54	62.191	124.4	124	1.66	493	0.046	16.2	0.000	0.459	0.013	0	310.954	0.000	0.000	0.013
Reactive Silica (as SiO2) (ppm)	13.7	0.00	6.112	12.2	12.2	0.16	48.4	0.005	1.59	0.000	0.045	0.001	0	30.558	0.000	0.000	0.001
Total Silica (as SiO2) (ppm)	16		7.133	14.3	14.3	0.19	56.5	0.005	1.85	0.000	0.053	0.001	0	35.664	0.000	0.000	0.001
Total Alkalinity (as CaCO3 @ pH 4.3) (ppm)	69.2		30.754	61.5	61.5	0.82	244	0.023	8.0	0.000	0.227	0.006	0	153.772	0.000	0.000	0.006
Bicarbonate Alkalinity (as CaCO3) (ppm)	58.0	0.72	25.781	51.6	52	0.69	204	0.019	6.7	0.000	0.190	0.005	0	128.907	0.000	0.000	0.005
Carbonate Alkalinity (as CaCO3) (ppm)	11.2	2.82	5.001	10.0	10.0	0.13	39.6	0.004	1.30	0.000	0.037	0.001	0	25.007	0.000	0.000	0.001
Fluoride (as F) (ppm)	4.55	0.00	2.049	4.10	4.10	0.05	16.2	0.002	0.53	0.000	0.015	0.000	0	10.244	0.000	0.000	0.000
Nitrate (as N) (ppm)	2.70	1.15	1.227	2.45	2.45	0.03	9.7	0.001	0.32	0.000	0.009	0.000	0	6.137	0.000	0.000	0.000
Orthophosphate (as P) (ppm)	0.100		0.073	0.146	0.146	0.00	0.577	0.000	0.019	0.000	0.001	0.000	0	0.364	0.000	0.000	0.000
Phosphorous (as P) (ppm)	0.120		0.082	0.164	0.164	0.00	0.648	0.000	0.021	0.000	0.001	0.000	0	0.409	0.000	0.000	0.000
Iron (as Fe) (ppm)	0.13	0.00	0.086	0.172	0.172	0.00	0.683	0.000	0.022	0.000	0.001	0.000	0	0.431	0.000	0.000	0.000
Vanadium (as V) (ppm)	0.019		0.037	0.074	0.074	0.00	0.292	0.000	0.010	0.000	0.000	0.000	0	0.185	0.000	0.000	0.000
Chromium (as Cr) (ppm)	0.011		0.033	0.067	0.067	0.00	0.264	0.000	0.009	0.000	0.000	0.000	0	0.167	0.000	0.000	0.000
Zinc (as Zn) (ppm)	0.033		0.043	0.086	0.086	0.00	0.342	0.000	0.011	0.000	0.000	0.000	0	0.216	0.000	0.000	0.000
Molybdenum (as Mo) (ppm)	0.029		0.041	0.083	0.083	0.00	0.328	0.000	0.011	0.000	0.000	0.000	0	0.207	0.000	0.000	0.000
Barium (as Ba) (ppm)	0.03	0.00	0.042	0.084	0.084	0.00	0.331	0.000	0.011	0.000	0.000	0.000	0	0.209	0.000	0.000	0.000

Assumptions:	
Cooling Tower Cycles of Conc. (COC)	
Cooling Tower Target pH	7.60
Minimum pH in RO Reject (Max NaOH)	5.0
Steam Cycle Blowdown COC of Feed	100
Steam Cycle Blowdown Vent to Atm	0
1st Pass RO % Waste	99%
2nd Pass RO % Waste	97.5%
Calcium added in Excess of Stoichiometry	10%
Unreacted Fluoride	5%
EDI % Waste	99.75%

CASE 1 - SUMMER PEAK																
Flow rate (gpm)	26	26	52.0	18	0.77	5.0	38.8	5.0	33.8	53.0	0.013	0.10				89.8
Diagram Stream Number	**15**	**16**	**17**	**18**	**19**	**20**	**21**	**22**	**23**	**24**	**25**	**26**				**27**
Species	Quench Water	Steam Cycle Blowdown Vent to Atmosphere	Steam Cycle Blowdown (Quenched)	Steam Cycle Liquid Blowdown to Evaporation Pond	WetSAC Drift	Service Water	Service Water / WetSAC Makeup	Domestic Water Use	WetSAC Makeup (from Raw Water)	Clarifier Product	Clarifier Chemicals Added	Clarifier Solids Slurry				Evaporation Pond Supply
pH																
Specific Conductance (@ 25C), uS/cm	0.056	0.055	0.20	0.205	3,621	1,448	1,448	1,448	1,448	2,925	3,311	36,040				4,035
TDS (ppm)	**0.001**	**0**	**0.080**	**0.080**	**1,933**	**773**	**773**	**773**	**773**	**3,063**	**331,092**	**46,028**				**2,143**
Calcium (as Ca) (ppm)	0.000	0	0.001	0.001	35.707	14.3	14.3	14.3	14.3	61.2	119,065	13,288				42.34
Magnesium (as Mg) (ppm)	0.000	0	0.000	0.000	2.297	0.92	0.92	0.92	0.92	3.64						2.55
Total Hardness (as CaCO3) (ppm)	0.000	0	0.004	0.004	97.946	39.2	39.2	39.2	39.2	155						108.67
Sodium (as Na) (ppm)	0.000	0	0.024	0.024	578.079	231	231	231	231	917	1,107	136				641.38
Potassium (as K) (ppm)	0.000	0	0.000	0.000	5.920	2.4	2.37	2.37	2.4	9.39						6.57
Streams 25 & 26 not represented on Water Ba	0.000	0	0.031	0.031	760.352	304	304	304	304	1,214	210,919	23,540				848.42
Sulfate (as SO4) (ppm)	0.000	0	0.013	0.013	311.339	125	125	125	125	494						345.43
Reactive Silica (as SiO2) (ppm)	0.000	0	0.001	0.001	30.594	12.2	12.2	12.2	12.2	48.5						33.94
Total Silica (as SiO2) (ppm)	0.000	0	0.001	0.001	35.707	14.3	14.3	14.3	14.3	56.6						39.62
Total Alkalinity (as CaCO3 @ pH 4.3) (ppm)	0.000	0	0.006	0.006	153.962	61.6	61.6	61.6	61.6	244						170.82
Bicarbonate Alkalinity (as CaCO3) (ppm)	0.000	0	0.005	0.005	129.066	52	51.6	51.6	52	205						143.20
Carbonate Alkalinity (as CaCO3) (ppm)	0.000	0	0.001	0.001	25.037	10.0	10.0	10.0	10.0	39.7						27.78
Fluoride (as F) (ppm)	0.000	0	0.000	0.000	10.255	4.10	4.10	4.10	4.10	0.81		9,064				2.251
Nitrate (as N) (ppm)	0.000	0	0.000	0.000	6.143	2.46	2.46	2.46	2.46	9.7						6.815
Orthophosphate (as P) (ppm)	0.000	0	0.000	0.000	0.363	0.145	0.145	0.145	0.145	0.576						0.403
Phosphorous (as P) (ppm)	0.000	0	0.000	0.000	0.408	0.163	0.163	0.163	0.163	0.647						0.452
Iron (as Fe) (ppm)	0.000	0	0.000	0.000	0.430	0.172	0.172	0.172	0.172	0.682						0.477
Vanadium (as V) (ppm)	0.000	0	0.000	0.000	0.183	0.073	0.073	0.073	0.073	0.291						0.203
Chromium (as Cr) (ppm)	0.000	0	0.000	0.000	0.166	0.066	0.066	0.066	0.066	0.263						0.184
Zinc (as Zn) (ppm)	0.000	0	0.000	0.000	0.219	0.088	0.088	0.088	0.088	0.347						0.243
Molybdenum (as Mo) (ppm)	0.000	0	0.000	0.000	0.206	0.082	0.082	0.082	0.082	0.326						0.228
Barium (as Ba) (ppm)	0.000	0	0.000	0.000	0.208	0.083	0.083	0.083	0.083	0.330						0.231

CASE 7 - WINTER DESIGN																
Flow rate (gpm)	26	26	52.0	28.9	0.77	5.0	28.1	5.0	23.1	53.0	0.013	0.10				96.1
Diagram Stream Number	**15**	**16**	**17**	**18**	**19**	**20**	**21**	**22**	**23**	**24**	**25**	**26**				**27**
Species	Quench Water	Steam Cycle Blowdown Vent to Atmosphere	Steam Cycle Blowdown (Quenched)	Steam Cycle Liquid Blowdown to Evaporation Pond	WetSAC Drift	Service Water	Service Water / WetSAC Makeup	Domestic Water Use	WetSAC Makeup (from Raw Water)	Clarifier Product	Clarifier Chemicals Added	Clarifier Solids Slurry				Evaporation Pond Supply
pH																
Specific Conductance (@ 25C), uS/cm	0.056	0.055	0.20	0.204	3,601.48	1,440	1,440	1,440	1,440.478	2,909	3,311	36,040				3,899
TDS (ppm)	**0.001**	**0**	**0.079**	**0.079**	**1,922**	**769**	**769**	**769**	**769**	**3,047**	**331,092**	**45,985**				**2,072**
Calcium (as Ca) (ppm)	0.000	0	0.001	0.001	35.519	14.2	14.2	14.2	14.2	61.0	119,065	13,288				37.76
Magnesium (as Mg) (ppm)	0.000	0	0.000	0.000	2.292	0.92	0.92	0.92	0.92	3.64						2.48
Total Hardness (as CaCO3) (ppm)	0.000	0	0.004	0.004	97.419	39.0	39.0	39.0	39.0	155						105.24
Sodium (as Na) (ppm)	0.000	0	0.024	0.024	574.937	230	230	230	230	912	1,107	136				621.11
Potassium (as K) (ppm)	0.000	0	0.000	0.000	5.895	2.4	2.36	2.36	2.4	9.35						6.37
Chloride (as Cl) (ppm)	0.000	0	0.031	0.031	756.217	302	302	302	302	1,208	210,919	23,540				821.67
Sulfate (as SO4) (ppm)	0.000	0	0.013	0.013	309.649	124	124	124	124	491						334.51
Reactive Silica (as SiO2) (ppm)	0.000	0	0.001	0.001	30.434	12.2	12.2	12.2	12.2	48.3						32.88
Total Silica (as SiO2) (ppm)	0.000	0	0.001	0.001	35.519	14.2	14.2	14.2	14.2	56.3						38.37
Total Alkalinity (as CaCO3 @ pH 4.3) (ppm)	0.000	0	0.006	0.006	153.130	61.2	61.2	61.2	61.2	243						165.42
Bicarbonate Alkalinity (as CaCO3) (ppm)	0.000	0	0.005	0.005	128.370	51	51.3	51.3	51	204						138.68
Carbonate Alkalinity (as CaCO3) (ppm)	0.000	0	0.001	0.001	24.907	10.0	10.0	10.0	10.0	39.5						26.91
Fluoride (as F) (ppm)	0.000	0	0.000	0.000	10.206	4.08	4.08	4.08	4.08	0.81		9,021				2.09
Nitrate (as N) (ppm)	0.000	0	0.000	0.000	6.116	2.45	2.45	2.45	2.45	9.7						6.61
Orthophosphate (as P) (ppm)	0.000	0	0.000	0.000	0.368	0.147	0.147	0.147	0.147	0.584						0.40
Phosphorous (as P) (ppm)	0.000	0	0.000	0.000	0.413	0.165	0.165	0.165	0.165	0.654						0.45
Iron (as Fe) (ppm)	0.000	0	0.000	0.000	0.435	0.174	0.174	0.174	0.174	0.689						0.47
Vanadium (as V) (ppm)	0.000	0	0.000	0.000	0.189	0.076	0.076	0.076	0.076	0.300						0.20
Chromium (as Cr) (ppm)	0.000	0	0.000	0.000	0.172	0.069	0.069	0.069	0.069	0.272						0.19
Zinc (as Zn) (ppm)	0.000	0	0.000	0.000	0.220	0.088	0.088	0.088	0.088	0.349						0.24
Molybdenum (as Mo) (ppm)	0.000	0	0.000	0.000	0.211	0.085	0.085	0.085	0.085	0.335						0.23
Barium (as Ba) (ppm)	0.000	0	0.000	0.000	0.214	0.085	0.085	0.085	0.085	0.339						0.23

CASE 4 - ANNUAL AVERAGE																
Flow rate (gpm)	26	26	52.0	21	0.77	5.0	36.3	5.0	31.3	53.0	0.013	0.10				91.3
Diagram Stream Number	**15**	**16**	**17**	**18**	**19**	**20**	**21**	**22**	**23**	**24**	**25**	**26**				**27**
Species	Quench Water	Steam Cycle Blowdown Vent to Atmosphere	Steam Cycle Blowdown (Quenched)	Steam Cycle Liquid Blowdown to Evaporation Pond	WetSAC Drift	Service Water	Service Water / WetSAC Makeup	Domestic Water Use	WetSAC Makeup (from Raw Water)	Clarifier Product	Clarifier Chemicals Added	Clarifier Solids Slurry				Evaporation Pond Supply
pH																
Specific Conductance (@ 25C), uS/cm	0.056	0.055	0.20	0.205	3,616.62	1,447	1,447	1,447	1,446.531	2,922	3,311	36,040				3,924
TDS (ppm)	**0.001**	**0**	**0.080**	**0.080**	**1,930**	**772**	**772**	**772**	**772**	**3,059**	**331,092**	**46,018**				**2,084**
Calcium (as Ca) (ppm)	0.000	0	0.001	0.001	35.664	14.3	14.3	14.3	14.3	61.2	119,065	13,288				41.20
Magnesium (as Mg) (ppm)	0.000	0	0.000	0.000	2.296	0.92	0.92	0.92	0.92	3.64						2.48
Total Hardness (as CaCO3) (ppm)	0.000	0	0.004	0.004	97.826	39.1	39.1	39.1	39.1	155						105.68
Sodium (as Na) (ppm)	0.000	0	0.024	0.024	577.364	231	231	231	231	916	1,107	136				623.73
Potassium (as K) (ppm)	0.000	0	0.000	0.000	5.915	2.4	2.37	2.37	2.4	9.38						6.39
Chloride (as Cl) (ppm)	0.000	0	0.031	0.031	759.411	304	304	304	304	1,213	210,919	23,540				825.13
Sulfate (as SO4) (ppm)	0.000	0	0.013	0.013	310.954	124	124	124	124	493						335.92
Reactive Silica (as SiO2) (ppm)	0.000	0	0.001	0.001	30.558	12.2	12.2	12.2	12.2	48.5						33.01
Total Silica (as SiO2) (ppm)	0.000	0	0.001	0.001	35.664	14.3	14.3	14.3	14.3	56.6						38.53
Total Alkalinity (as CaCO3 @ pH 4.3) (ppm)	0.000	0	0.006	0.006	153.772	61.5	61.5	61.5	61.5	244						166.12
Bicarbonate Alkalinity (as CaCO3) (ppm)	0.000	0	0.005	0.005	128.907	52	51.6	51.6	52	204						139.26
Carbonate Alkalinity (as CaCO3) (ppm)	0.000	0	0.001	0.001	25.007	10.0	10.0	10.0	10.0	39.7						27.02
Fluoride (as F) (ppm)	0.000	0	0.000	0.000	10.244	4.10	4.10	4.10	4.10	0.81		9,054				2.10
Nitrate (as N) (ppm)	0.000	0	0.000	0.000	6.137	2.45	2.45	2.45	2.45	9.7						6.63
Orthophosphate (as P) (ppm)	0.000	0	0.000	0.000	0.364	0.146	0.146	0.146	0.146	0.578						0.39
Phosphorous (as P) (ppm)	0.000	0	0.000	0.000	0.409	0.164	0.164	0.164	0.164	0.649						0.44
Iron (as Fe) (ppm)	0.000	0	0.000	0.000	0.431	0.172	0.172	0.172	0.172	0.684						0.47
Vanadium (as V) (ppm)	0.000	0	0.000	0.000	0.185	0.074	0.074	0.074	0.074	0.293						0.20
Chromium (as Cr) (ppm)	0.000	0	0.000	0.000	0.167	0.067	0.067	0.067	0.067	0.265						0.18
Zinc (as Zn) (ppm)	0.000	0	0.000	0.000	0.216	0.086	0.086	0.086	0.086	0.342						0.23
Molybdenum (as Mo) (ppm)	0.000	0	0.000	0.000	0.207	0.083	0.083	0.083	0.083	0.328						0.22
Barium (as Ba) (ppm)	0.000	0	0.000	0.000	0.209	0.084	0.084	0.084	0.084	0.332						0.23

Assumptions:
Cooling Tower Cycles of Conc. (COC)
Cooling Tower Target pH
Minimum pH in RO Reject (Max NaOH)
Steam Cycle Blowdown COC of Feed
Steam Cycle Blowdown Vent to Atm
1st Pass RO % Waste
2nd Pass RO % Waste
Calcium added in Excess of Stoichiometry
Unreacted Fluoride
EDI % Waste

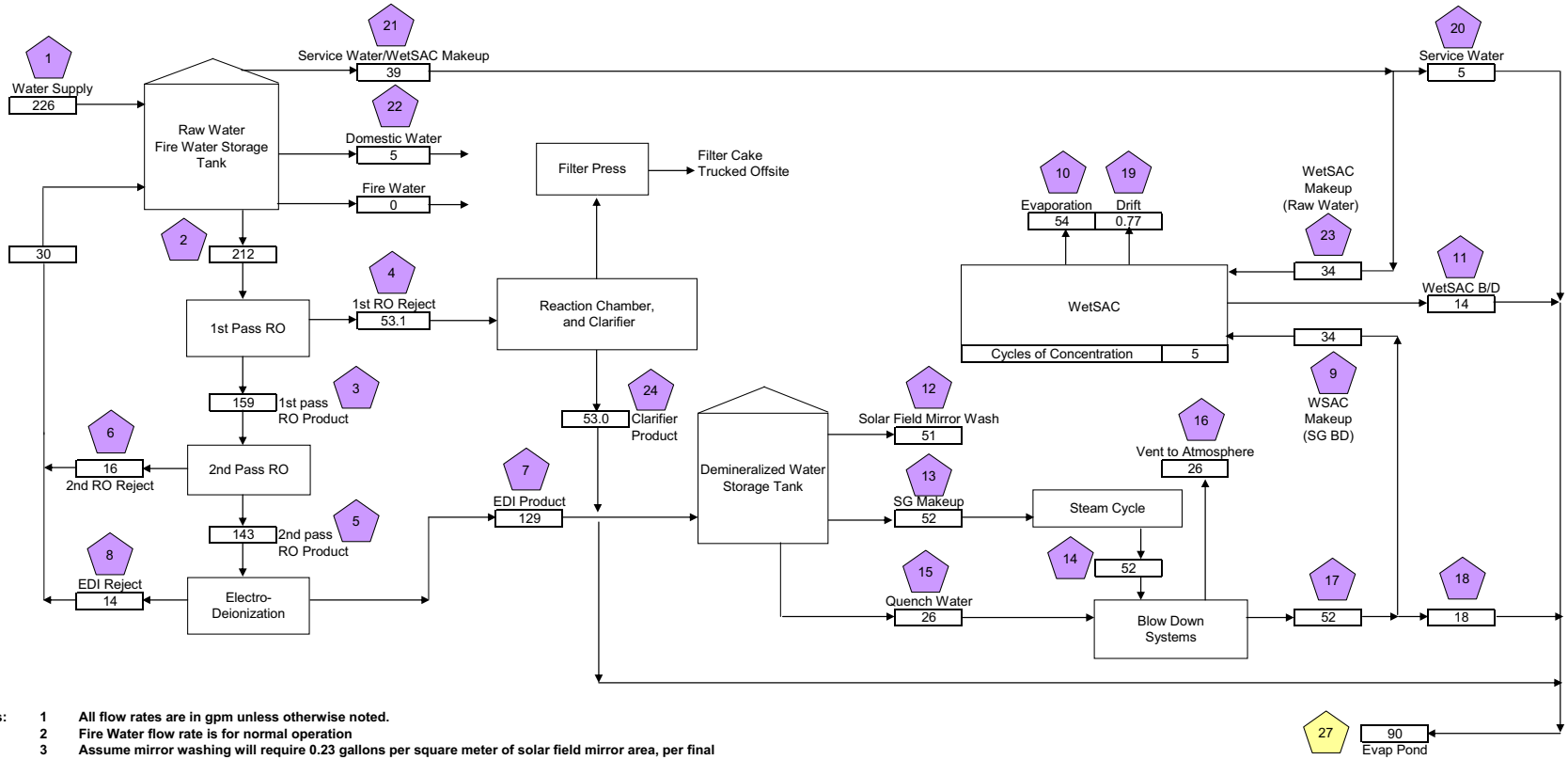

Notes:

1. **All flow rates are in gpm unless otherwise noted.**
2. **Fire Water flow rate is for normal operation**
3. **Assume mirror washing will require 0.23 gallons per square meter of solar field mirror area, per final Report on the Operation and Maintenance Improvement Program for Concentrating Solar Power Plants.**
4. **Mirror washing will not be performed in the event of water plant shutdown or well shutdown.**
5. **Demin Plant will be sized to operate 24 hours per day.**
6. **Assume 25% reject on 1st pass RO**
7. **Assume 10% reject on 2nd pass RO**
8. **Assume 10% reject on EDI**

Rev.	Description	By	Date	Checked
E	Modify Clarifier/Chem Feed Calcs	SDS	9/15/2009	BD
D	Add Clarifier and Chem Feed	SDS	8/20/2009	BD
C	Calculations	JWL	7/22/2009	SDS
B	Calculations	JWL	7/16/2009	SDS
A	Calculations	JWL	6/26/2009	SDS

Design Case:		
Configuration	Solar/Steam Cycle	
Dry bulb Temp	117.0	Deg F
Wet Bulb Temp	73.8	Deg F
Amb Pressure	14.7	psia

WorleyParsons
resources & energy

Case 1 - Summer Peak

Rice Solar Energy Project

Rev E

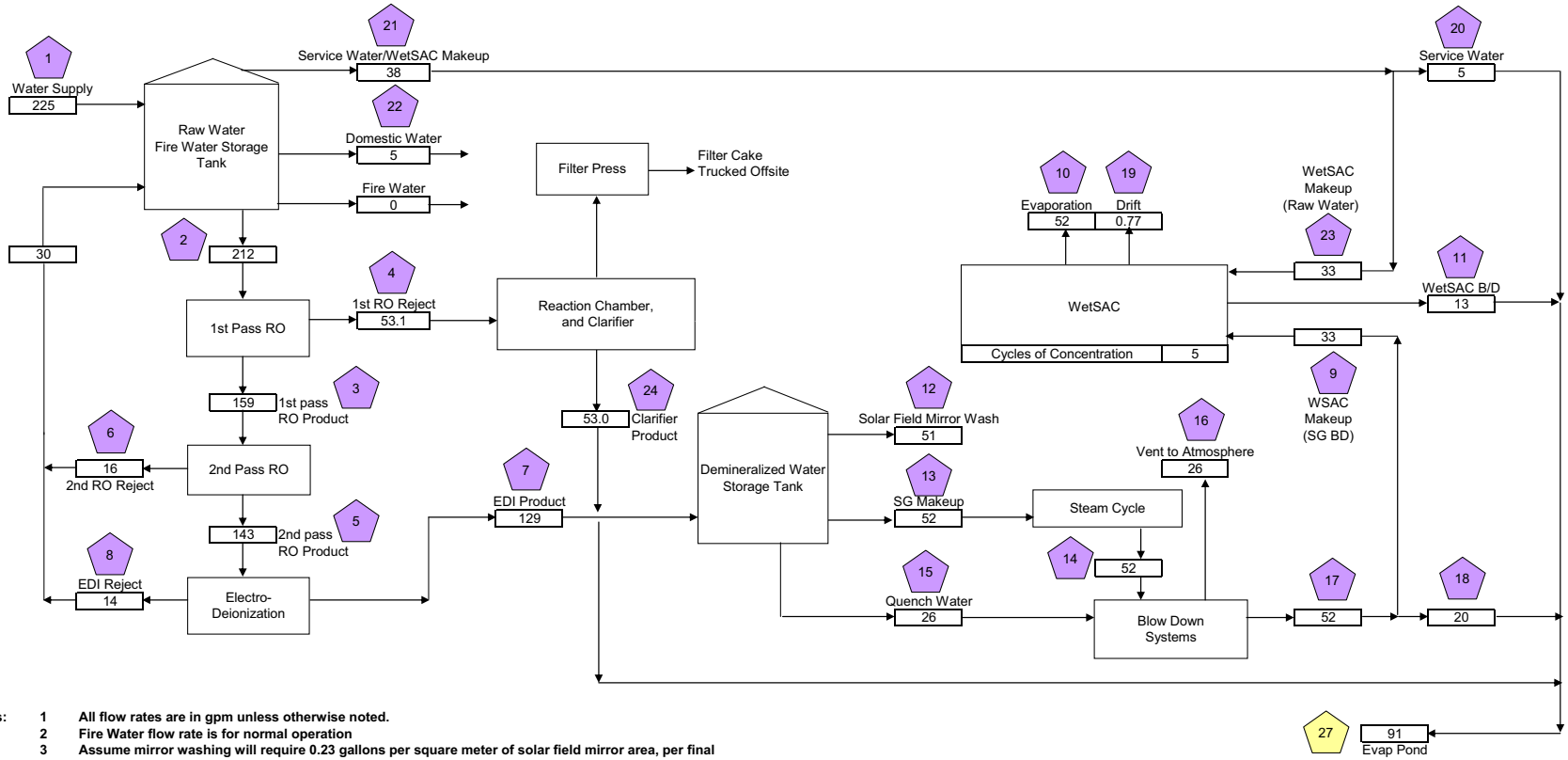

Notes:

1. **All flow rates are in gpm unless otherwise noted.**
2. **Fire Water flow rate is for normal operation**
3. **Assume mirror washing will require 0.23 gallons per square meter of solar field mirror area, per final Report on the Operation and Maintenance Improvement Program for Concentrating Solar Power Plants.**
4. **Mirror washing will not be performed in the event of water plant shutdown or well shutdown.**
5. **Demin Plant will be sized to operate 24 hours per day.**
6. **Assume 25% reject on 1st pass RO**
7. **Assume 10% reject on 2nd pass RO**
8. **Assume 10% reject on EDI**

Rev.	Description	By	Date	Checked
E	Modify Clarifier/Chem Feed Calcs	SDS	9/15/2009	BD
D	Add Clarifier and Chem Feed	SDS	8/20/2009	BD
C	Calculations	JWL	7/22/2009	SDS
B	Calculations	JWL	7/16/2009	SDS
A	Calculations	JWL	6/26/2009	SDS

Design Case:		
Configuration	Solar/Steam Cycle	
Dry bulb Temp	110.0	Deg F
Wet Bulb Temp	72.1	Deg F
Amb Pressure	14.7	psia

WorleyParsons
resources & energy

Case 2 - Summer Design

Rice Solar Energy Project

Rev E

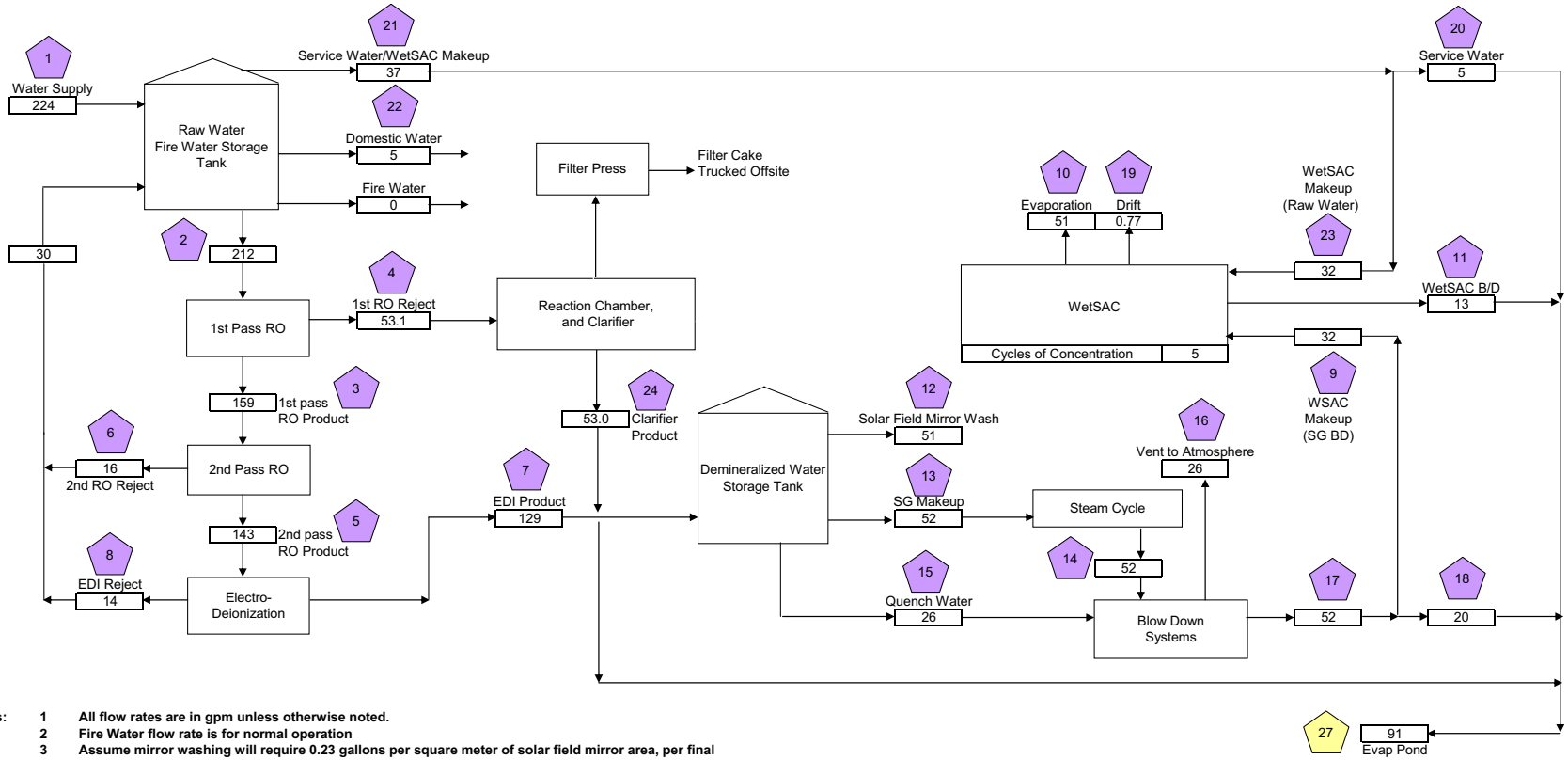

Notes:

1. **All flow rates are in gpm unless otherwise noted.**
2. **Fire Water flow rate is for normal operation**
3. **Assume mirror washing will require 0.23 gallons per square meter of solar field mirror area, per final Report on the Operation and Maintenance Improvement Program for Concentrating Solar Power Plants.**
4. **Mirror washing will not be performed in the event of water plant shutdown or well shutdown.**
5. **Demin Plant will be sized to operate 24 hours per day.**
6. **Assume 25% reject on 1st pass RO**
7. **Assume 10% reject on 2nd pass RO**
8. **Assume 10% reject on EDI**

Rev.	Description	By	Date	Checked
E	Modify Clarifier/Chem Feed Calcs	SDS	9/15/2009	BD
D	Add Clarifier and Chem Feed	SDS	8/20/2009	BD
C	Calculations	JWL	7/22/2009	SDS
B	Calculations	JWL	7/16/2009	SDS
A	Calculations	JWL	6/26/2009	SDS

Design Case:		
Configuration	Solar/Steam Cycle	
Dry bulb Temp	97.0	Deg F
Wet Bulb Temp	67.9	Deg F
Amb Pressure	14.7	psia

WorleyParsons
resources & energy

Case 3 - Summer Average

Rice Solar Energy Project

Rev E

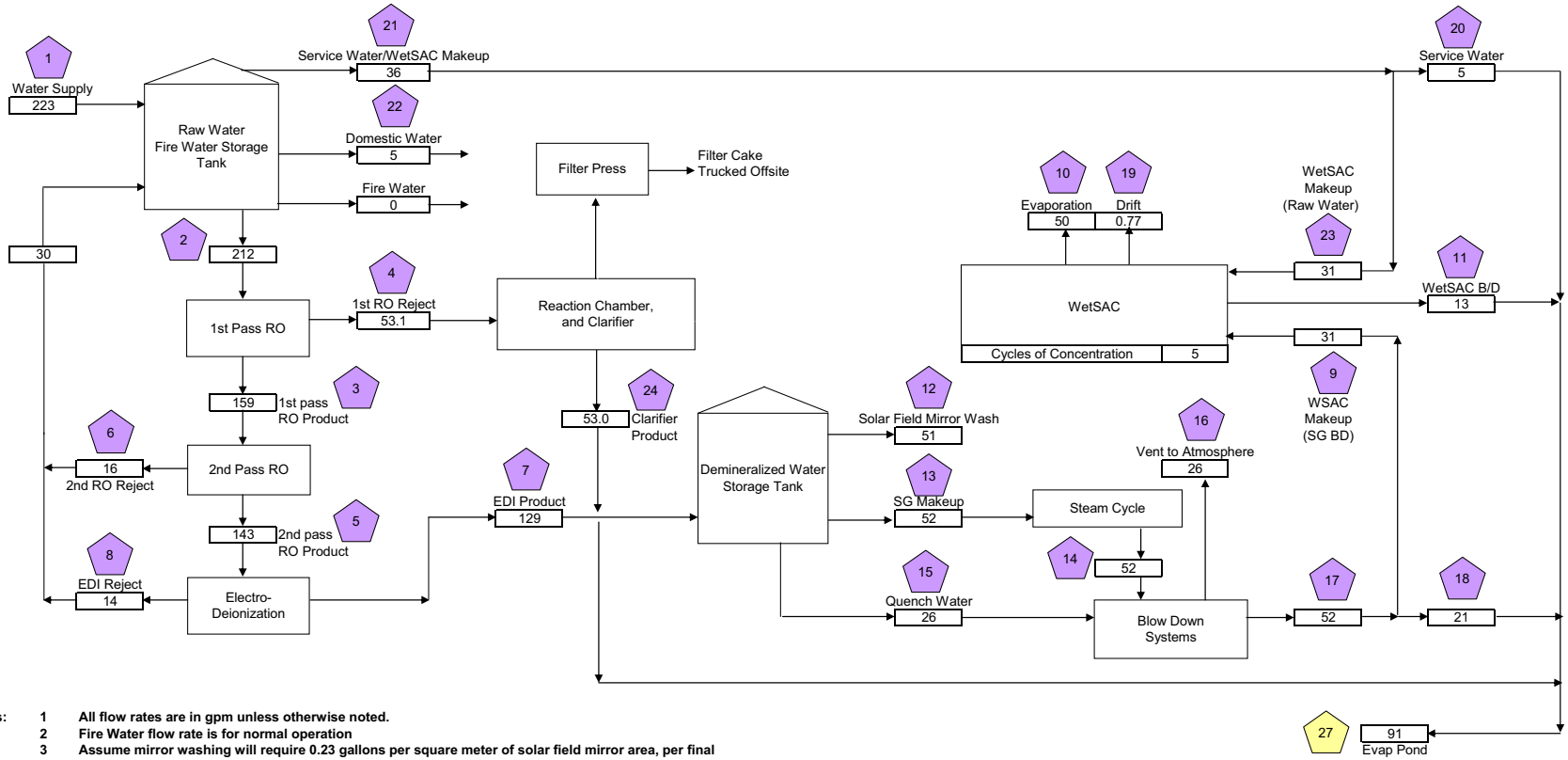

Notes:

1. **All flow rates are in gpm unless otherwise noted.**
2. **Fire Water flow rate is for normal operation**
3. **Assume mirror washing will require 0.23 gallons per square meter of solar field mirror area, per final Report on the Operation and Maintenance Improvement Program for Concentrating Solar Power Plants.**
4. **Mirror washing will not be performed in the event of water plant shutdown or well shutdown.**
5. **Demin Plant will be sized to operate 24 hours per day.**
6. **Assume 25% reject on 1st pass RO**
7. **Assume 10% reject on 2nd pass RO**
8. **Assume 10% reject on EDI**

Rev.	Description	By	Date	Checked
E	Modify Clarifier/Chem Feed Calcs	SDS	9/15/2009	BD
D	Add Clarifier and Chem Feed	SDS	8/20/2009	BD
C	Calculations	JWL	7/22/2009	SDS
B	Calculations	JWL	7/16/2009	SDS
A	Calculations	JWL	6/26/2009	SDS

Design Case:		
Configuration	Solar/Steam Cycle	
Dry bulb Temp	80.0	Deg F
Wet Bulb Temp	59.7	Deg F
Amb Pressure	14.7	psia

WorleyParsons
resources & energy

Case 4 - Annual Average

Rice Solar Energy Project

Rev E

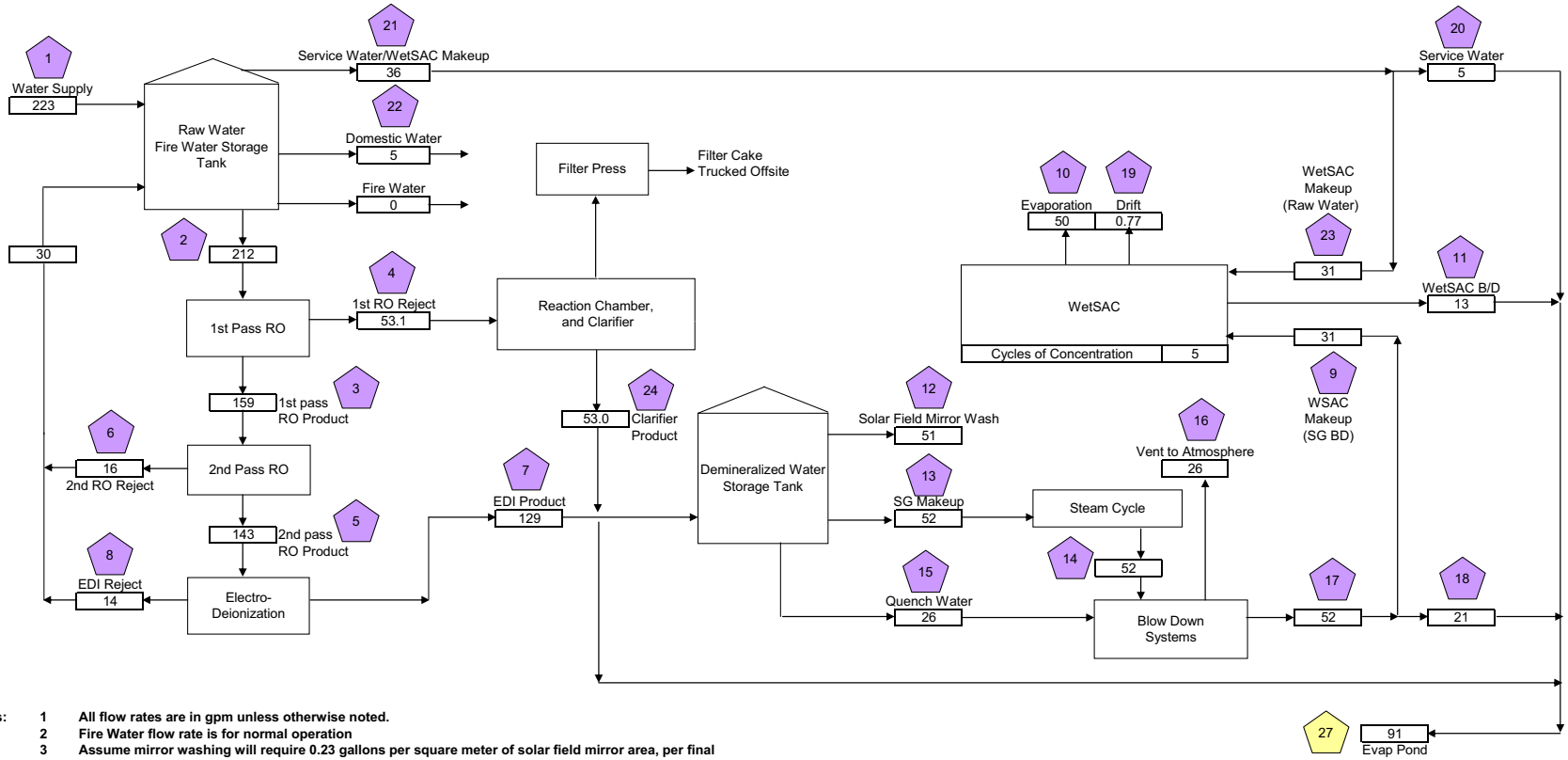

Notes:

1. **All flow rates are in gpm unless otherwise noted.**
2. **Fire Water flow rate is for normal operation**
3. **Assume mirror washing will require 0.23 gallons per square meter of solar field mirror area, per final Report on the Operation and Maintenance Improvement Program for Concentrating Solar Power Plants.**
4. **Mirror washing will not be performed in the event of water plant shutdown or well shutdown.**
5. **Demin Plant will be sized to operate 24 hours per day.**
6. **Assume 25% reject on 1st pass RO**
7. **Assume 10% reject on 2nd pass RO**
8. **Assume 10% reject on EDI**

Rev.	Description	By	Date	Checked
E	Modify Clarifier/Chem Feed Calcs	SDS	9/15/2009	BD
D	Add Clarifier and Chem Feed	SDS	8/20/2009	BD
C	Calculations	JWL	7/22/2009	SDS
B	Calculations	JWL	7/16/2009	SDS
A	Calculations	JWL	6/26/2009	SDS

Design Case:		
Configuration	Solar/Steam Cycle	
Dry bulb Temp	80.0	Deg F
Wet Bulb Temp	59.7	Deg F
Amb Pressure	14.7	psia

WorleyParsons
resources & energy

Case 5 - Shoulder Average

Rice Solar Energy Project

Rev E

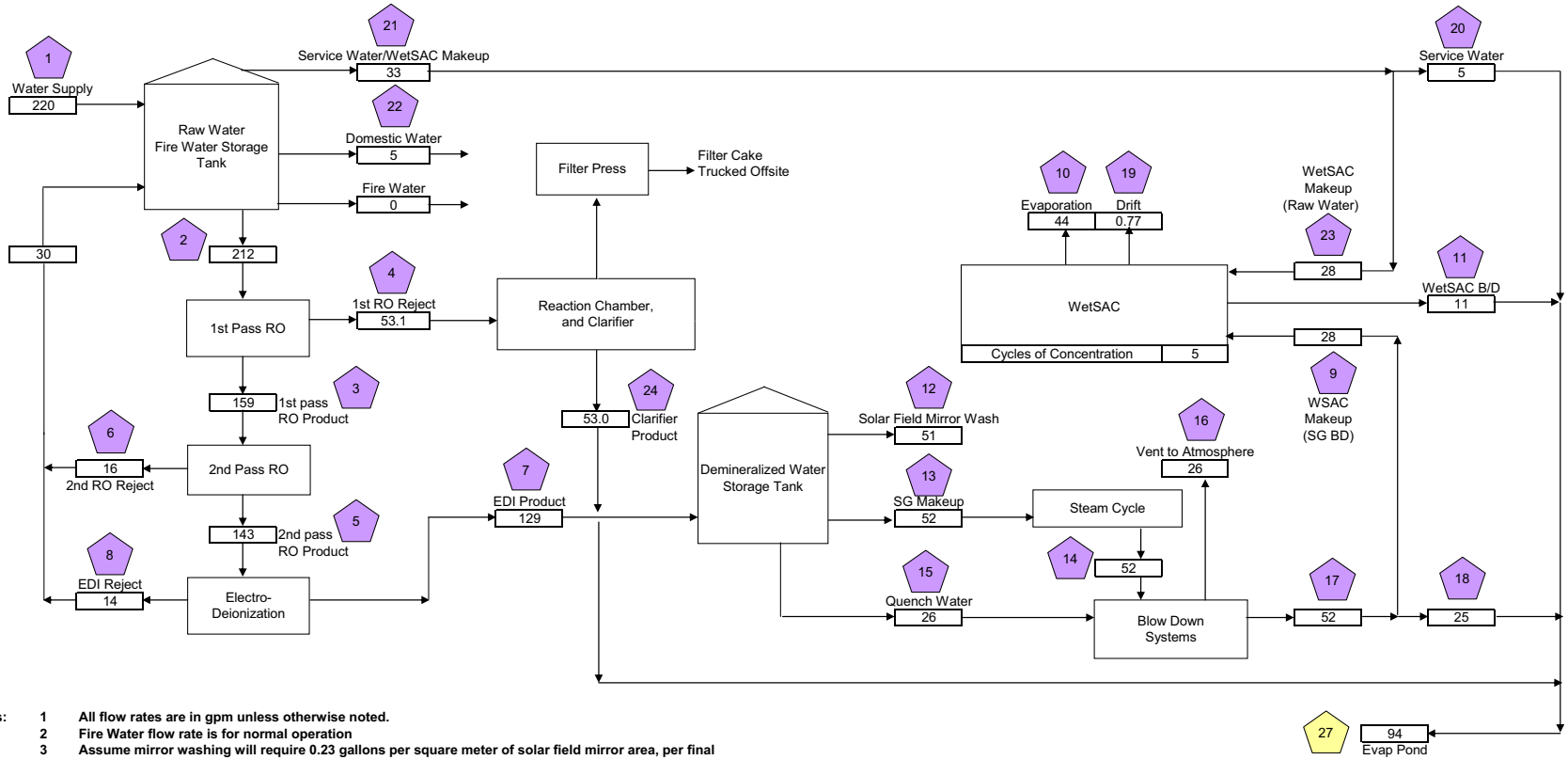

Notes:

1. **All flow rates are in gpm unless otherwise noted.**
2. **Fire Water flow rate is for normal operation**
3. **Assume mirror washing will require 0.23 gallons per square meter of solar field mirror area, per final Report on the Operation and Maintenance Improvement Program for Concentrating Solar Power Plants.**
4. **Mirror washing will not be performed in the event of water plant shutdown or well shutdown.**
5. **Demin Plant will be sized to operate 24 hours per day.**
6. **Assume 25% reject on 1st pass RO**
7. **Assume 10% reject on 2nd pass RO**
8. **Assume 10% reject on EDI**

Rev.	Description	By	Date	Checked
E	Modify Clarifier/Chem Feed Calcs	SDS	9/15/2009	BD
D	Add Clarifier and Chem Feed	SDS	8/20/2009	BD
C	Calculations	JWL	7/22/2009	SDS
B	Calculations	JWL	7/16/2009	SDS
A	Calculations	JWL	6/26/2009	SDS

Design Case:		
Configuration	Solar/Steam Cycle	
Dry bulb Temp	65.0	Deg F
Wet Bulb Temp	50.3	Deg F
Amb Pressure	14.7	psia

WorleyParsons
resources & energy

Case 6 - Winter Average

Rice Solar Energy Project

Rev E

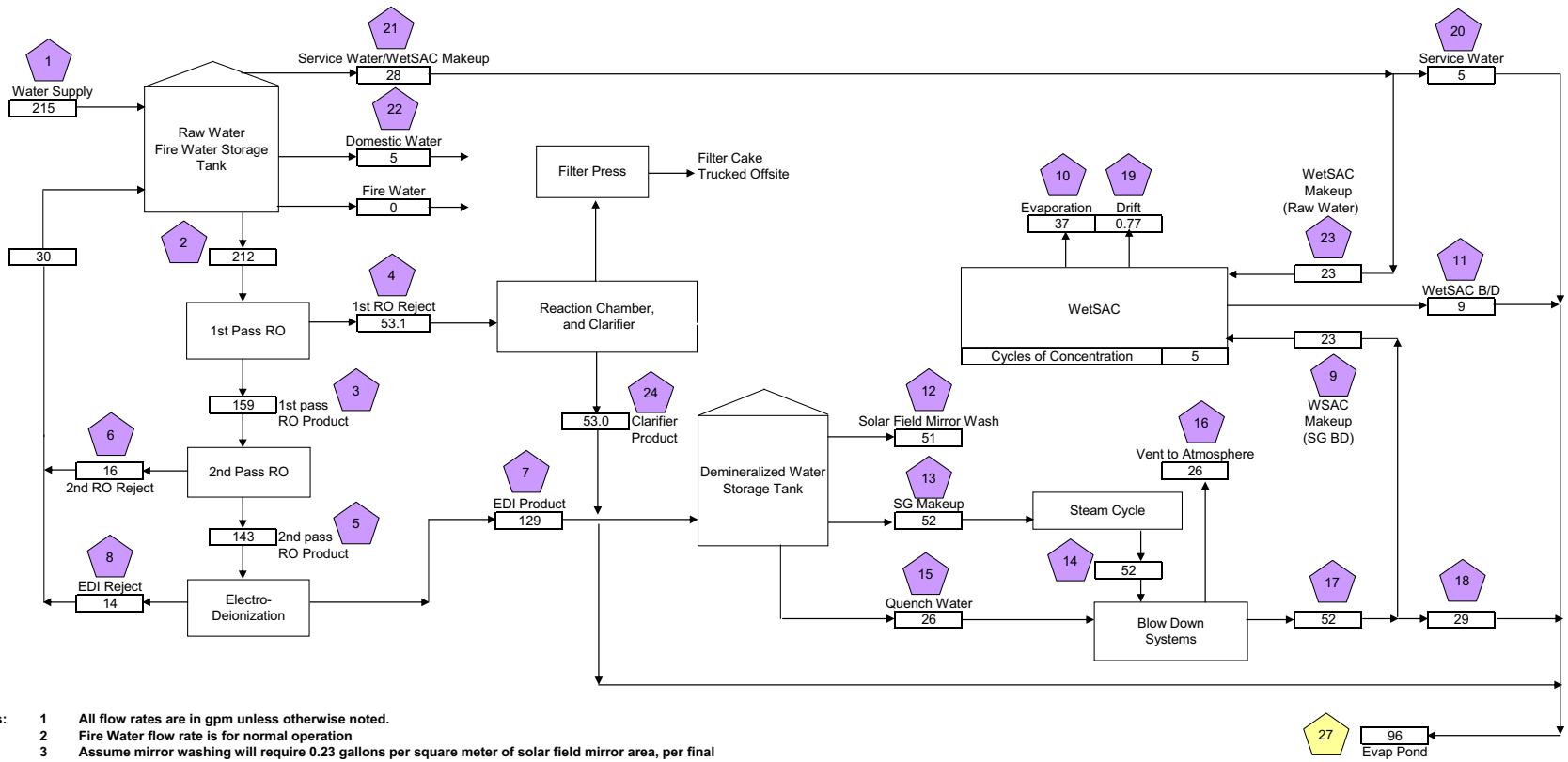

Notes:

1. **All flow rates are in gpm unless otherwise noted.**
2. **Fire Water flow rate is for normal operation**
3. **Assume mirror washing will require 0.23 gallons per square meter of solar field mirror area, per final Report on the Operation and Maintenance Improvement Program for Concentrating Solar Power Plants.**
4. **Mirror washing will not be performed in the event of water plant shutdown or well shutdown.**
5. **Demin Plant will be sized to operate 24 hours per day.**
6. **Assume 25% reject on 1st pass RO**
7. **Assume 10% reject on 2nd pass RO**
8. **Assume 10% reject on EDI**

Rev.	Description	By	Date	Checked
E	Modify Clarifier/Chem Feed Calcs	SDS	9/15/2009	BD
D	Add Clarifier and Chem Feed	SDS	8/20/2009	BD
C	Calculations	JWL	7/22/2009	SDS
B	Calculations	JWL	7/16/2009	SDS
A	Calculations	JWL	6/26/2009	SDS

Design Case:		
Configuration	Solar/Steam Cycle	
Dry bulb Temp	45.0	Deg F
Wet Bulb Temp	37.5	Deg F
Amb Pressure	14.7	psia

WorleyParsons
resources & energy

Case 7 - Winter Design

Rice Solar Energy Project

Rev E