APPENDIX 5B

Power Load Flow Diagrams

Figure 1A

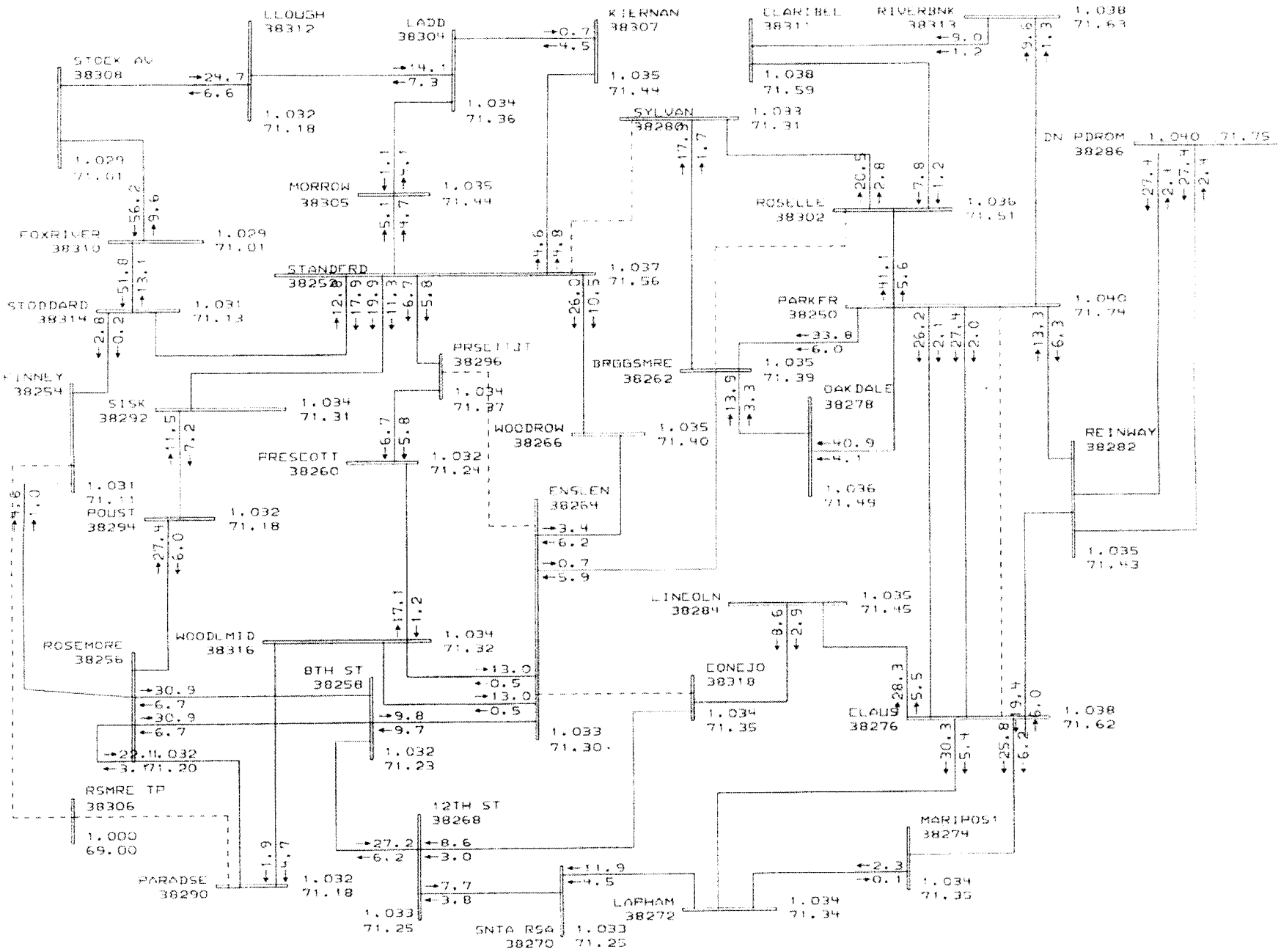

General Electric International, Inc. | PSLF Program | MW/MVAR | Thu Jan 23 14:12:33 2003

PG&E 2002 TRANSMISSION ASSESSMENT STUDY(4/10/02)
July 9, 2002

2005 Configuration A

E:\ENGINE!1\69kv_no_ssjid.drw
c:\engineering\caec\rpn_gn\sum
Rating = 1

Figure 1B

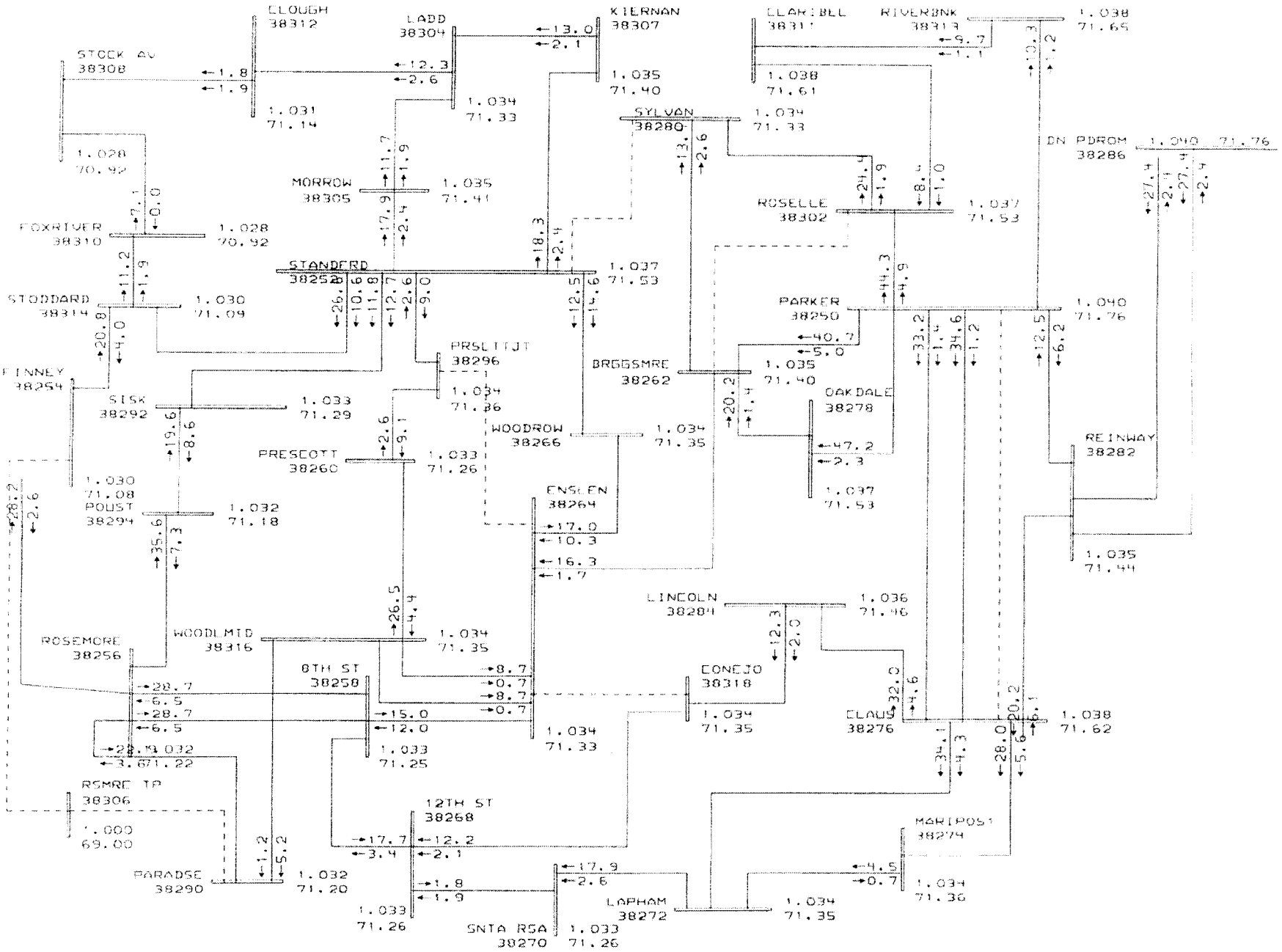

General Electric International, Inc. PSLF Program MW/MVAR Thu Jan 23 14:21:35 2003

PG&E 2002 TRANSMISSION ASSESSMENT STUDY(4/10/02)
July 9, 2002

2005 Configuration A

C:\ENGINE1\69kv_no_ssjid.drw
C:\engineering\eaec\rpn_gn.sum
Rating = 1

Figure 1C

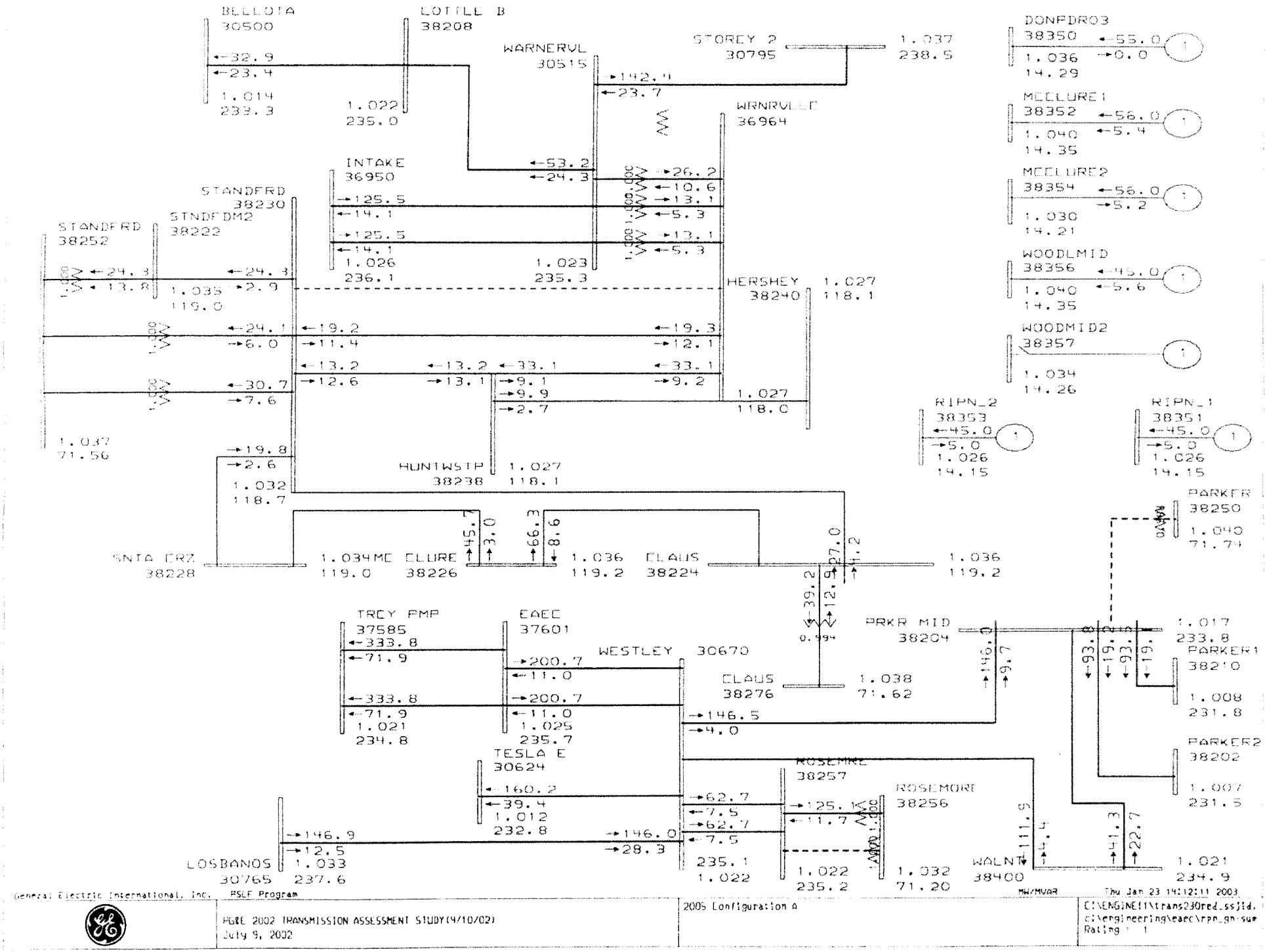
BELLOTA 30500
LOTTLE B 38208
WARNERVL 30515
STOREY 2 30795
DONFDRO3 38350
MCCLURE1 38352
MCCLURE2 38354
WOODLMID 38356
WOODMID2 38357
WRNRVLLC 36964
INTAKE 36950
STANDFRD 38230
STNDFDM2 38222
STANDFRD 38252
HERSHEY 38240
RIPN_2 38353
RIPN_1 38351
HUNTWSTP 38238
PARKER 38250
SNTA CRZ 38228
MC CLURE 38226
CLAUS 38224
TRCY PMP 37585
EAEC 37601
WESTLEY 30670
PRKR MID 38204
CLAUS 38276
PARKER1 38210
PARKER2 38202
TESLA E 30624
ROSEMRE 38257
ROSEMORE 38256
LOSBANOS 30765
WALNT 38400
General Electric International, Inc.
PSLF Program
PG&E 2002 TRANSMISSION ASSESSMENT STUDY(4/10/02)
July 9, 2002
2005 Configuration A
MW/MVAR
Thu Jan 23 14:12:11 2003

Figure 1D

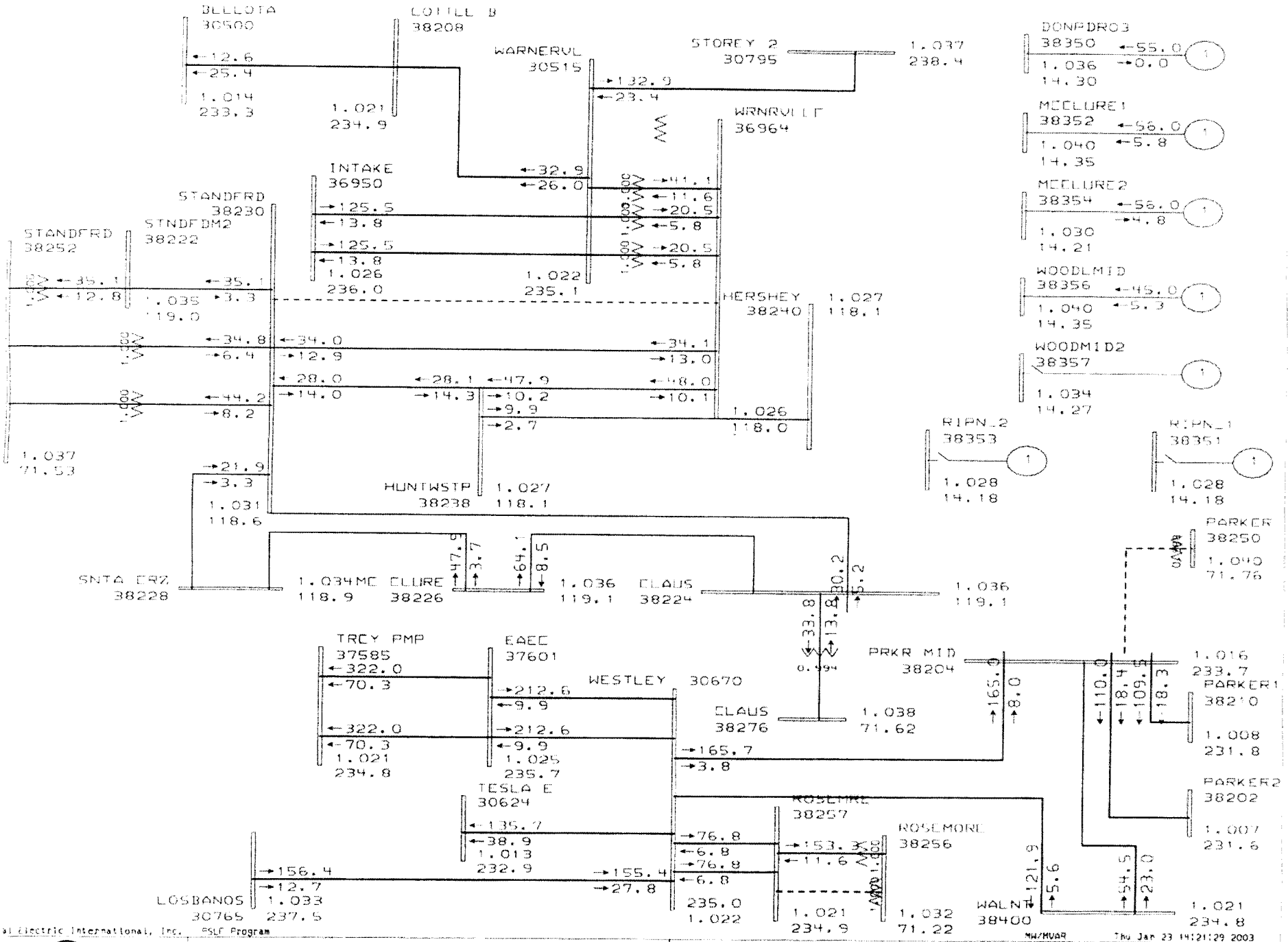
BELLOTA
30500
COTTLE B
38208
WARNERVL
30515
STOREY 2
30795
DONPDRO3
38350
MCCLURE1
38352
MCCLURE2
38354
WOODLMID
38356
WOODMID2
38357
WRNRVLLT
36964
INTAKE
36950
STANDFRD
38230
STNDFDM2
38222
STANDFRD
38252
HERSHEY
38240
HUNTWSTP
38238
RIPN_2
38353
RIPN_1
38351
PARKER
38250
SNTA CRZ
38228
MCCLURE
38226
CLAUS
38224
TRCY PMP
37585
EAEC
37601
WESTLEY
30670
CLAUS
38276
PRKR MID
38204
PARKER1
38210
PARKER2
38202
TESLA E
30624
ROSEMRE
38257
ROSEMORE
38256
LOSBANOS
30765
WALNT
38400
General Electric International, Inc. PSLF Program
PG&E 2002 TRANSMISSION ASSESSMENT STUDY(4/10/02)
July 9, 2002
2005 Configuration A
MW/MVAR
Thu Jan 23 14:21:29 2003
C:\ENGINEI\trans230red_ssjid.
c:\engineering\eaec\rpn_gn.sum
Rating = 1

Figure 2A

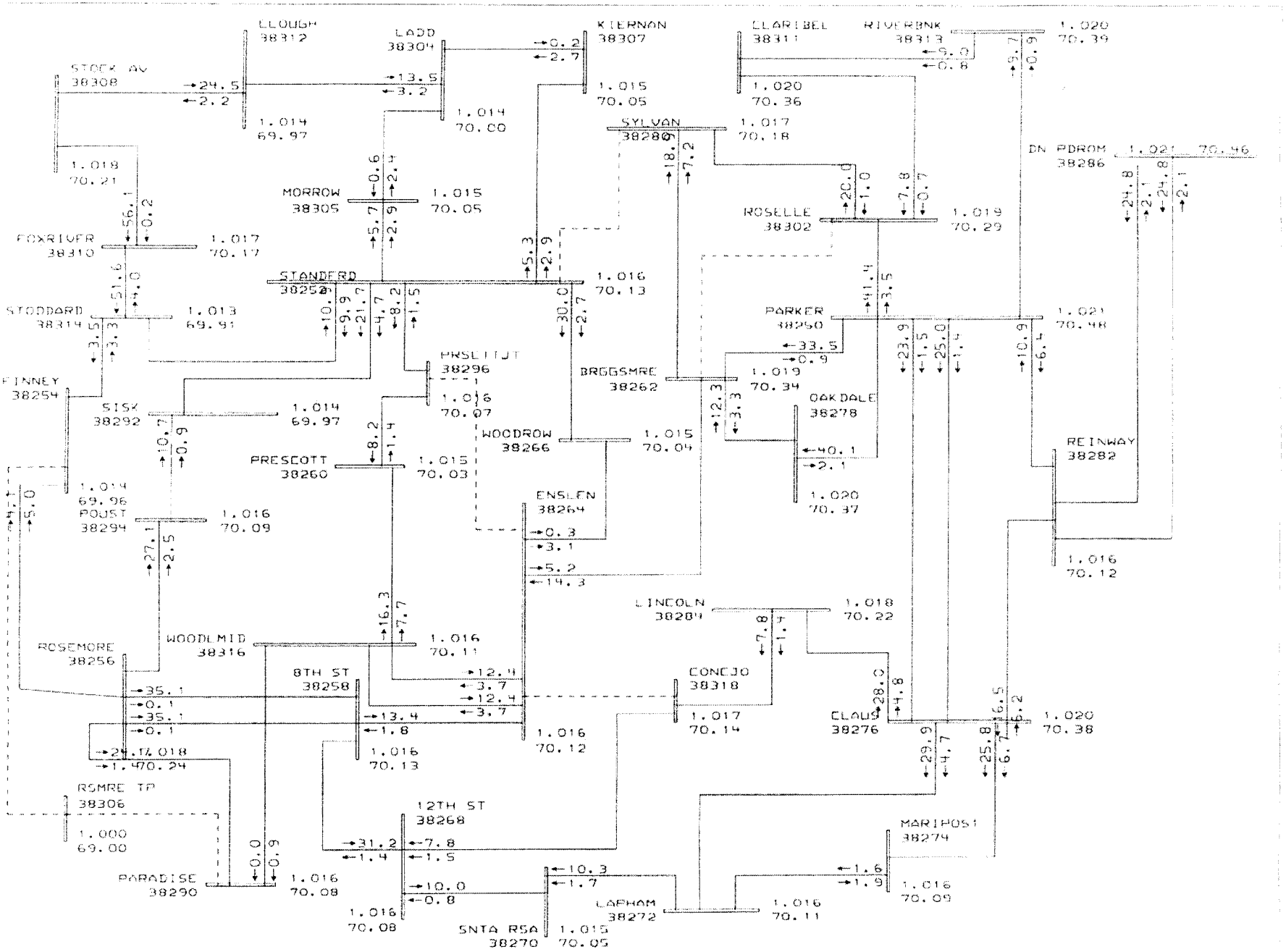

General Electric International, Inc. PSLF Program

WESTERN ELECTRICITY COORDINATING COUNCIL
2006 HS2-SA BASE CASE
MID RPN_GN (06hs2sa_mid.sav)

MW/MVAR

Thu Jan 23 11:30:49 2003

C:\ENGINEI\69kv_no_ssjid.drw
c:\engineering\eaec\06hs2sa_mi
Rating = 1

Figure 2B

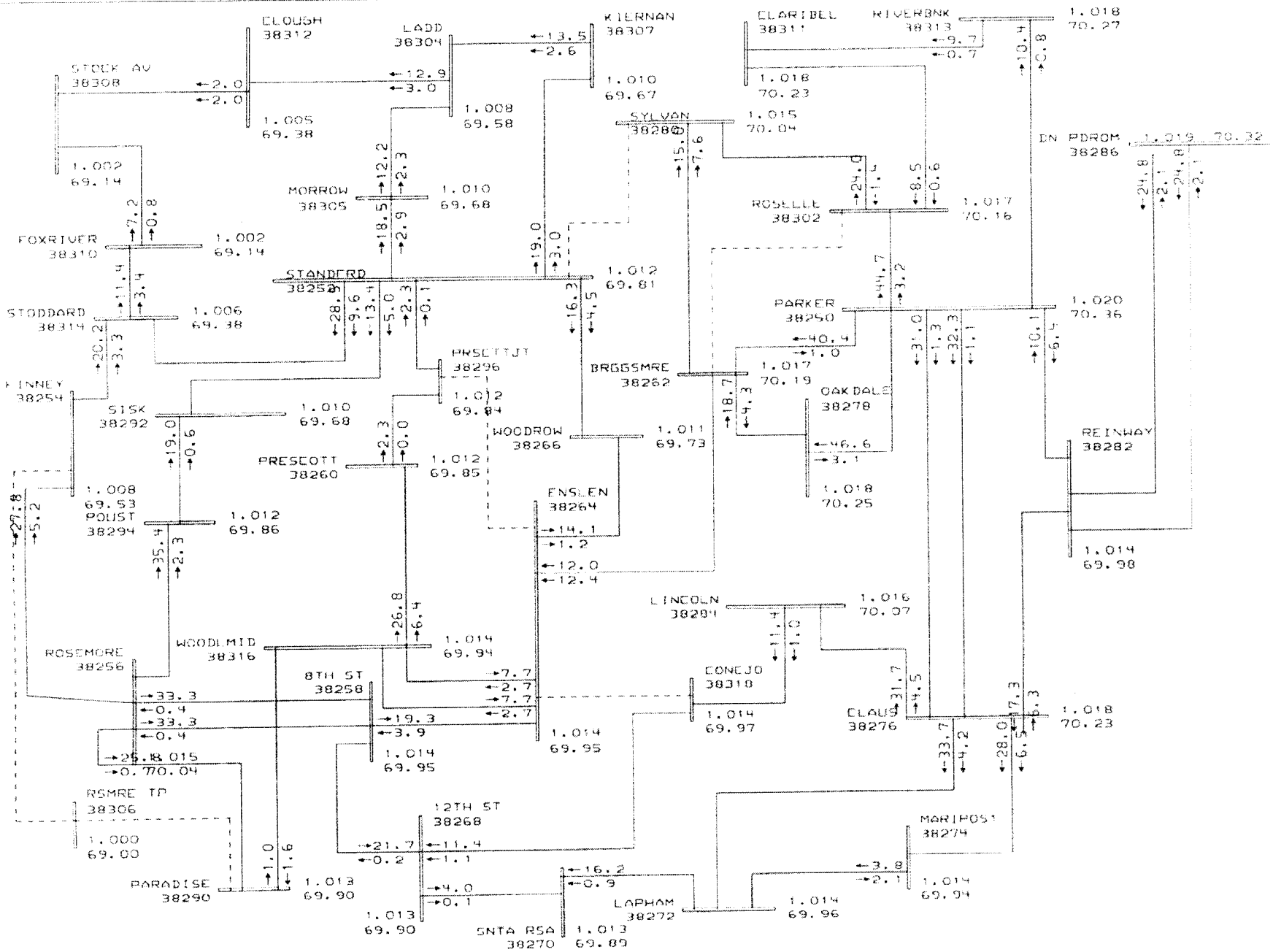
CLOUGH 38312
LADD 38304
KIERNAN 38307
CLARIBEL 38311
RIVERBNK 38313
STOCK AV 38308
SYLVAN 38280
EN PDROM 38286
MORROW 38305
ROSELLE 38302
FOXRIVER 38310
STANDERD 38252
STODDARD 38314
PARKER 38250
PRSCTTJT 38296
BRGGSMRE 38262
KINNEY 38254
SISK 38292
OAKDALE 38278
WOODROW 38266
PRESCOTT 38260
REINWAY 38282
POUST 38294
ENSLEN 38264
LINCOLN 38284
ROSEMORE 38256
WOODLMID 38316
8TH ST 38258
CONEJO 38318
CLAUS 38276
RSMRE TP 38306
12TH ST 38268
MARIPOSA 38274
PARADISE 38290
LAPHAM 38272
SNTA RSA 38270
MW/MVAR
Thu Jan 23 14:37:07 2003
General Electric International, Inc.
PSLF Program
WESTERN ELECTRICITY COORDINATING COUNCIL
2006 HS2-SA BASE CASE
MID RPN_GN (06hs2sa_mid.sav)
C:\ENGINEI\69kv_no_ssjid.drw
c:\engineering\eaec\06hs2sa_mi
Rating = 1

Figure 2C

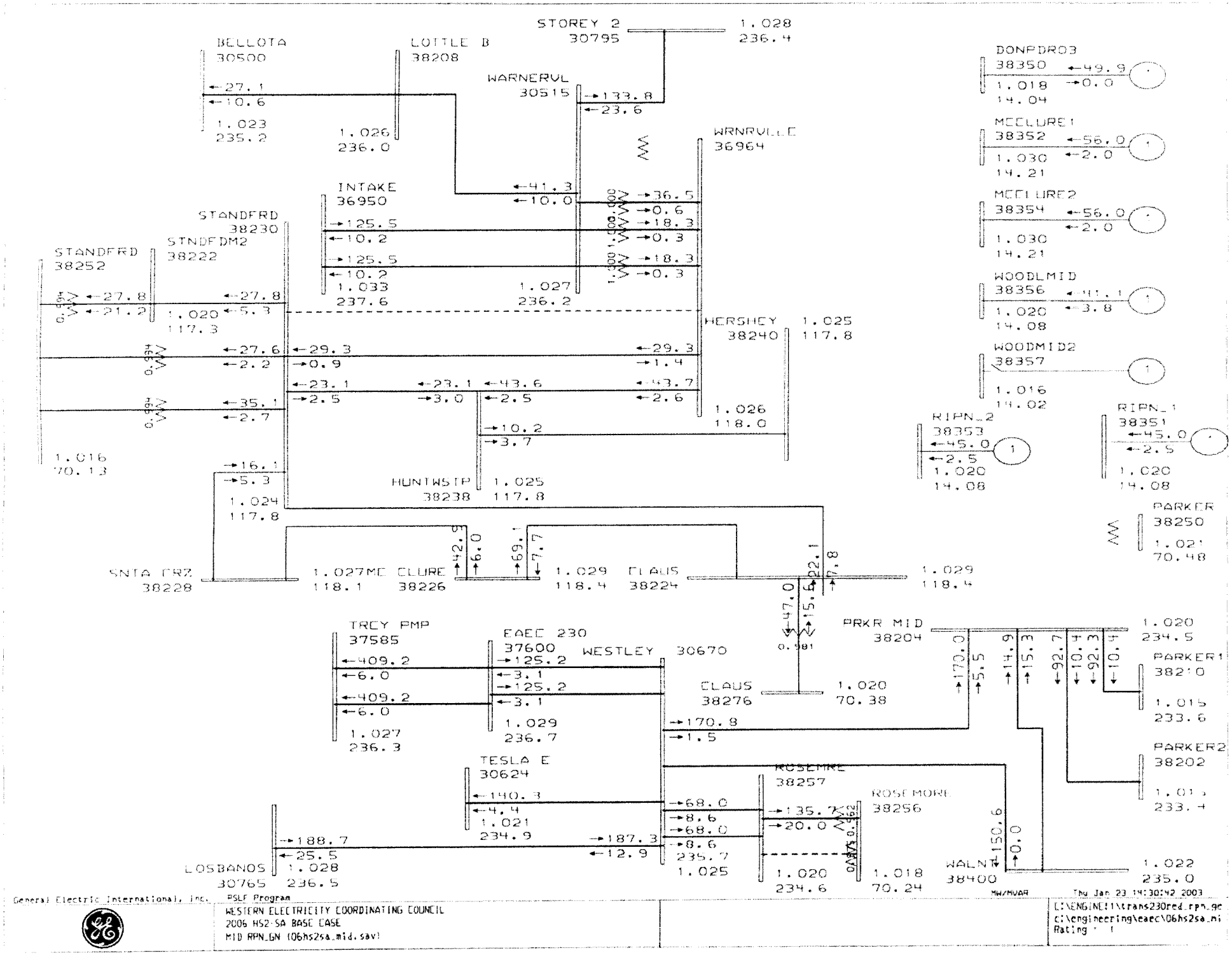
STOREY 2
30795
1.028
236.4
BELLOTA
30500
LOTTLE B
38208
WARNERVL
30515
DONPDRO3
38350
MCCLURE1
38352
MCCLURE2
38354
WOODLMID
38356
WOODMID2
38357
WRNRVLLE
36964
INTAKE
36950
STANDFRD
38230
STNDFDM2
38222
STANDFRD
38252
HERSHEY
38240
RIPN_2
38353
RIPN_1
38351
PARKER
38250
HUNTWSTP
38238
SNTA FRZ
38228
CLURE
38226
CLAUS
38224
TRCY PMP
37585
EAEC 230
37600
WESTLEY
30670
PRKR MID
38204
PARKER1
PARKER2
TESLA E
30624
ROSEMORE
38257
ROSEMORE
38256
LOSBANOS
30765
WALN
38400
General Electric International, Inc.
PSLF Program
WESTERN ELECTRICITY COORDINATING COUNCIL
2006 HS2-SA BASE CASE
MID RPN_GN (06hs2sa_mid.sav)
MW/MVAR
Thu Jan 23 14:30:42 2003

Figure 2D

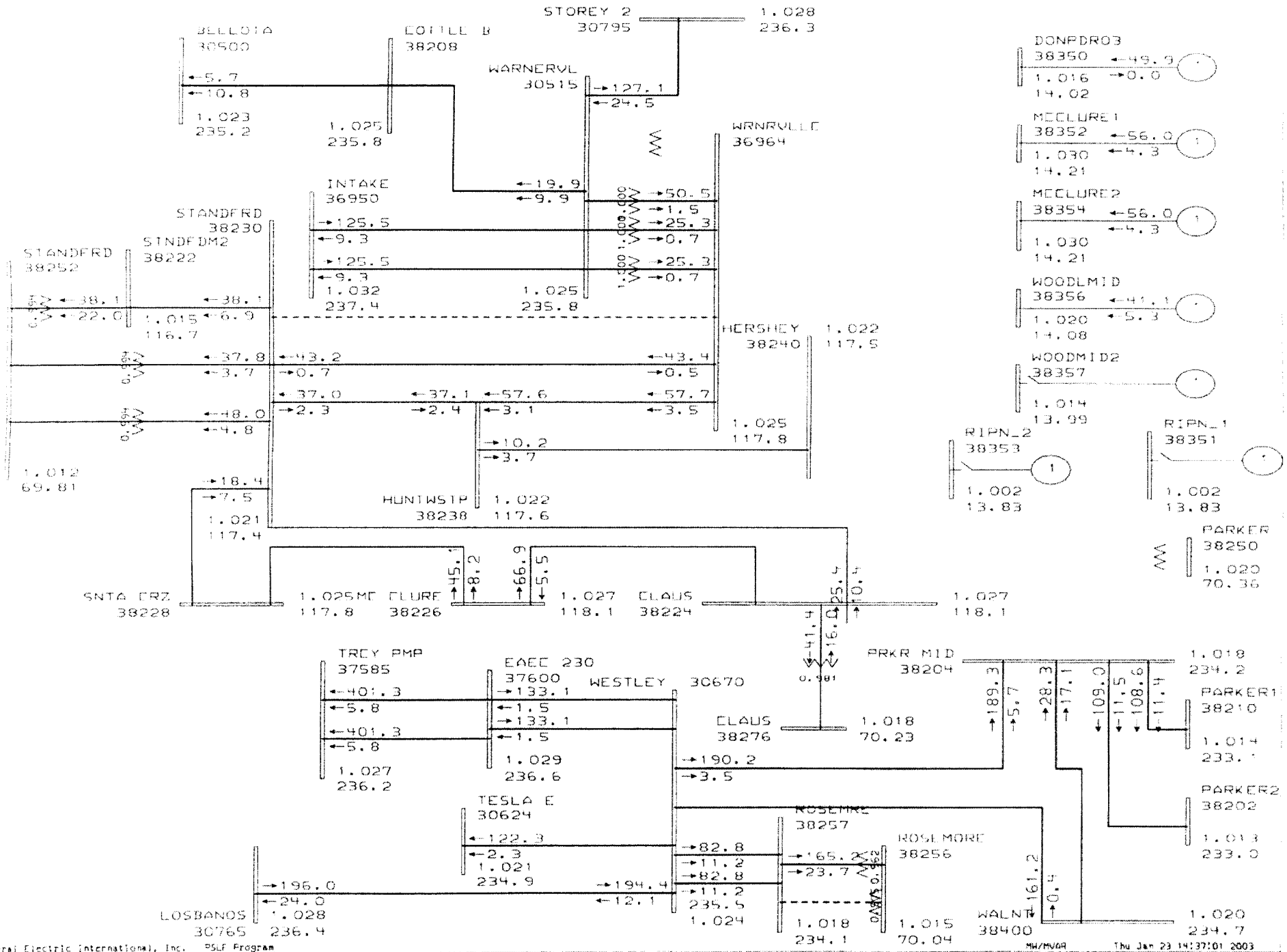
STOREY 2
30795
1.028
236.3
BELLOTA
30500
COTTLE B
38208
WARNERVL
30515
WRNRVLLC
36964
DONPDRO3
38350
MCCLURE1
38352
MCCLURE2
38354
WOODLMID
38356
WOODMID2
38357
INTAKE
36950
STANDFRD
38230
STNDFDM2
38222
STANDFRD
38252
HERSHEY
38240
RIPN_2
38353
RIPN_1
38351
PARKER
38250
HUNTWSTP
38238
SNTA CRZ
38228
MC CLURE
38226
CLAUS
38224
TREY PMP
37585
EAEC 230
37600
WESTLEY 30670
PRKR MID
38204
PARKER1
38210
CLAUS
38276
PARKER2
38202
TESLA E
30624
ROSEMRE
38257
ROSEMORE
38256
LOSBANOS
30765
WALNT
38400
General Electric International, Inc.
PSLF Program
WESTERN ELECTRICITY COORDINATING COUNCIL
2006 HS2-SA BASE CASE
MID RPN_GN (06hs2sa_mid.sav)
MW/MVAR
Thu Jan 23 14:37:01 2003