TRANSMISSION SYSTEM ENGINEERING
ATTACHMENT 1

FOR CONTINUATION SEE SHEET 02

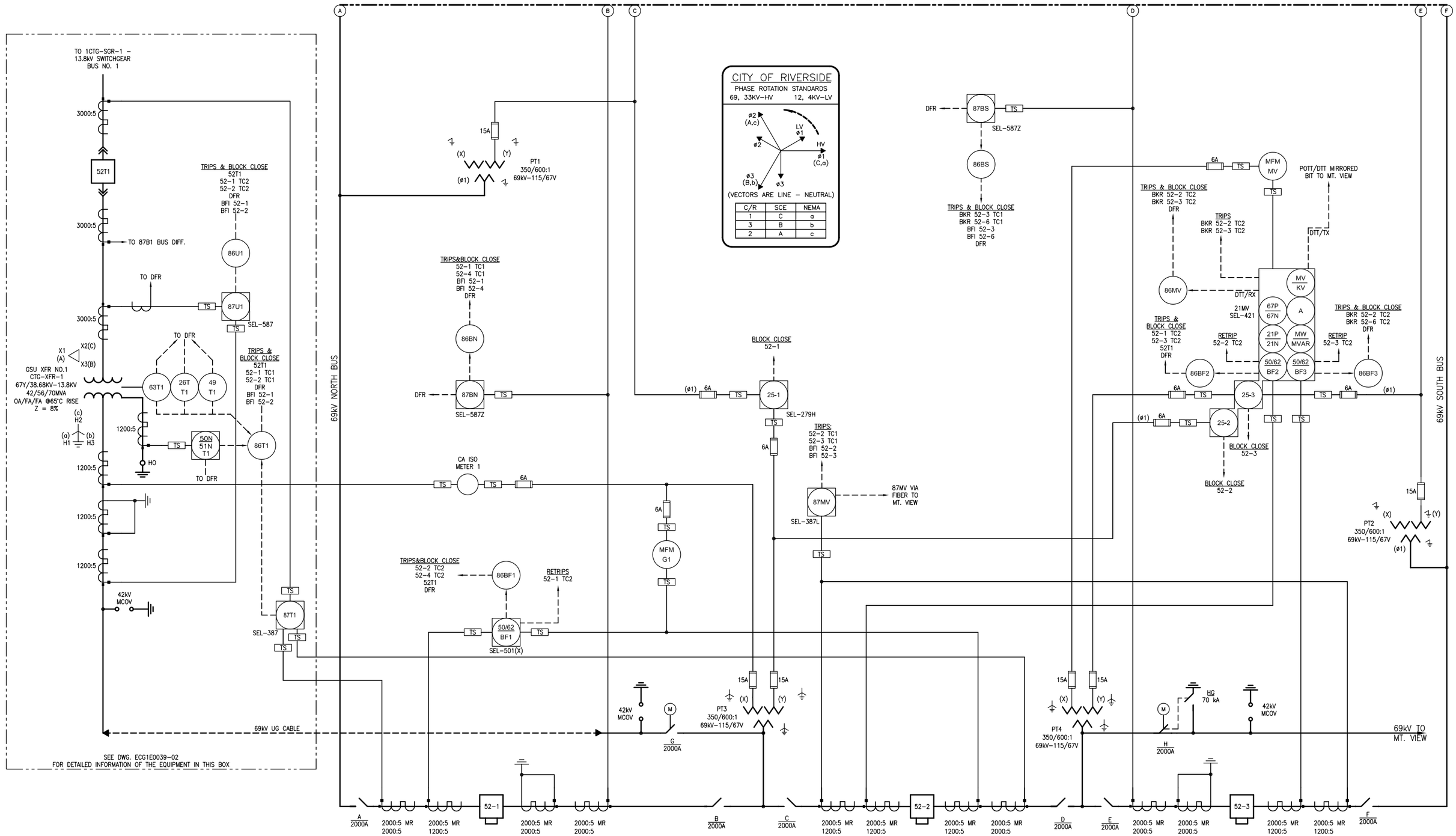

REV	DESCRIPTION	DR	CHK	APP	DATE
.	.	.	.	.	.
.	.	.	.	.	.
2	W.O. 632954 – AS-BUILTS	PEI	DM	RVE	05/09 08
1	FINAL AS-BUILT	THM	MN	SKW	07-27 2006
0	ISSUED FOR CONSTRUCTION	RA	JC	JDR	08-19 05
C	REVISED PER CLIENT'S COMMENTS 5-2-05	.	.	.	05-05

RIVERSIDE ENERGY RESOURCE CENTER
69 kV SWITCHYARD – BAY #1
ELECTRICAL ONE LINE DIAGRAM

SCALE	NONE	DRAWN	WS
DATE	01-26-05	CHECKED	JC
JOB NO.	T004-004C	APPROVED	CP

DRAWING NO. ECS0E0041-01

SHEET 1 OF 2

FILE NAME: ECS0E0041-01_R2.DWG

CITY OF RIVERSIDE PUBLIC UTILITIES

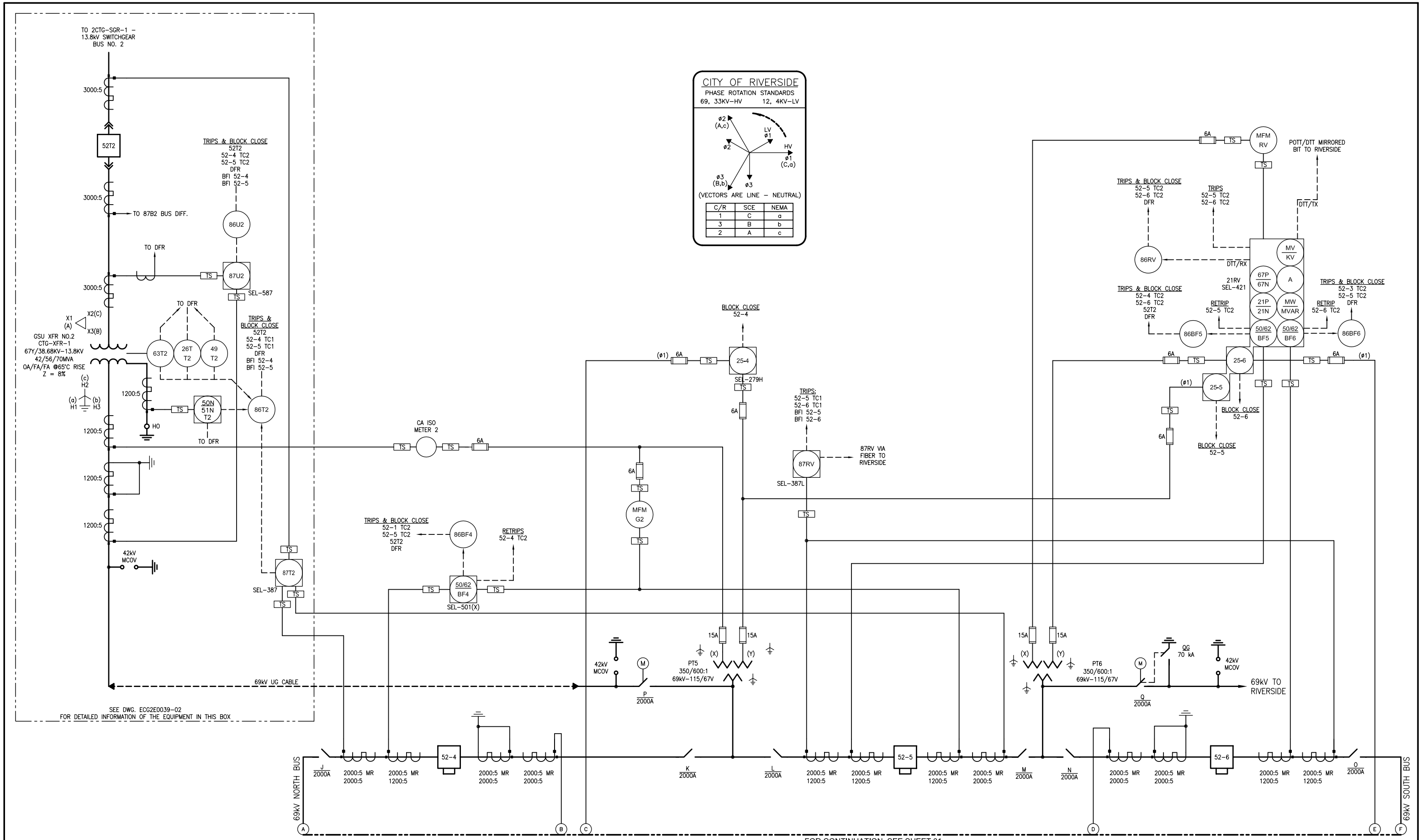

FOR CONTINUATION SEE SHEET 01

REV	DESCRIPTION	DR	CHK	APP	DATE
.	.	.	.	.	.
.	.	.	.	.	.
2	W.O. 632954 – AS-BUILTS	PEI	DM	RVE	05/09 08
1	FINAL AS-BUILT	THM	MN	SKW	07-27 2006
0	ISSUED FOR CONSTRUCTION	RA	JC	JDR	08-19 05
C	REVISED PER CLIENT'S COMMENTS 5-2-05				05-05

RIVERSIDE ENERGY RESOURCE CENTER
69 kV SWITCHYARD – BAY #2
ELECTRICAL ONE LINE DIAGRAM

SCALE	NONE	DRAWN	WS
DATE	01-26-05	CHECKED	JC
JOB NO.	T004-004C	APPROVED	CP

DRAWING NO. ECS0E0041-02

SHEET 2 OF 2

FILE NAME: ECS0E0041-02_R2.DWG

CITY OF RIVERSIDE PUBLIC UTILITIES

TRANSMISSION SYSTEM ENGINEERING
ATTACHMENT 2

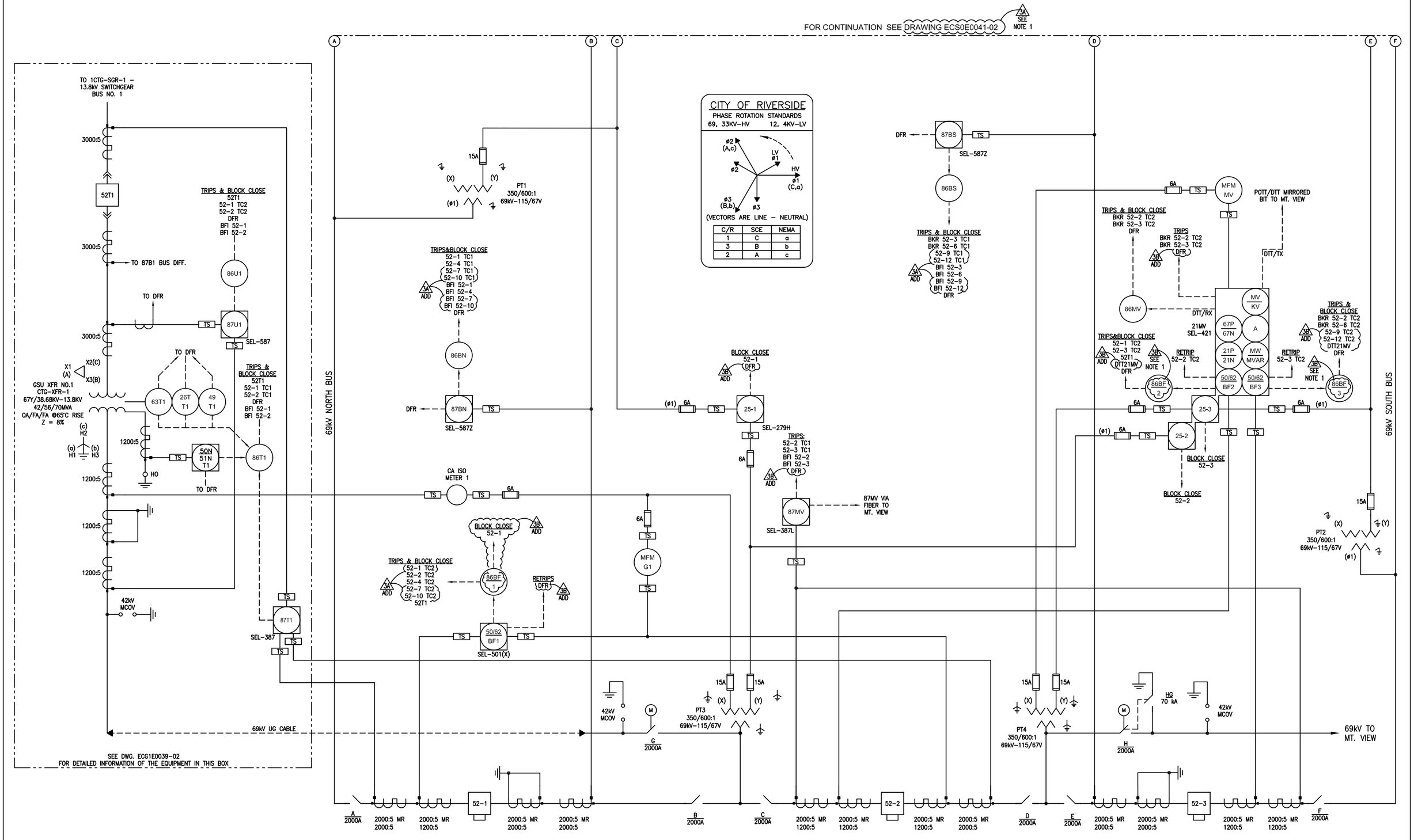

NOTES:

1. AS-BUILT INFORMATION CORRECTED FOR PREVIOUS PROJECT. (3B ADD)

ADDITION DRAWING

REV	DESCRIPTION	DR	CHK	APP	DATE
3B	W.O. 0703511 – REVISED PER RPU COMMENTS	JAB	DM	RVE	05/09/08
3A	W.O. 0703511 – ISSUED FOR APPROVAL	PEI	JK	RVE	02/19/08
2	W.O. 632954 – AS-BUILTS	PEI	DM	RVE	05/09/06
1	FINAL AS-BUILT	THM	MW	SKW	07-27-2006
0	ISSUED FOR CONSTRUCTION	RA	JC	JDR	08-19-05
C	REVISED PER CLIENT'S COMMENTS 5-2-05	.	.	.	05-05

RIVERSIDE ENERGY RESOURCE CENTER
69 kV SWITCHYARD – BAY #1 (3B ADD)
ELECTRICAL ONE LINE DIAGRAM

SCALE	NONE	DRAWN	WS
DATE	01-26-05	CHECKED	JC
JOB NO.	T004-004C	APPROVED	CP

DRAWING NO. ECS0E0041-01
SHEET 1 OF 4
FILE NAME: ECS0E0041-01_R3B.DWG

CITY OF RIVERSIDE PUBLIC UTILITIES

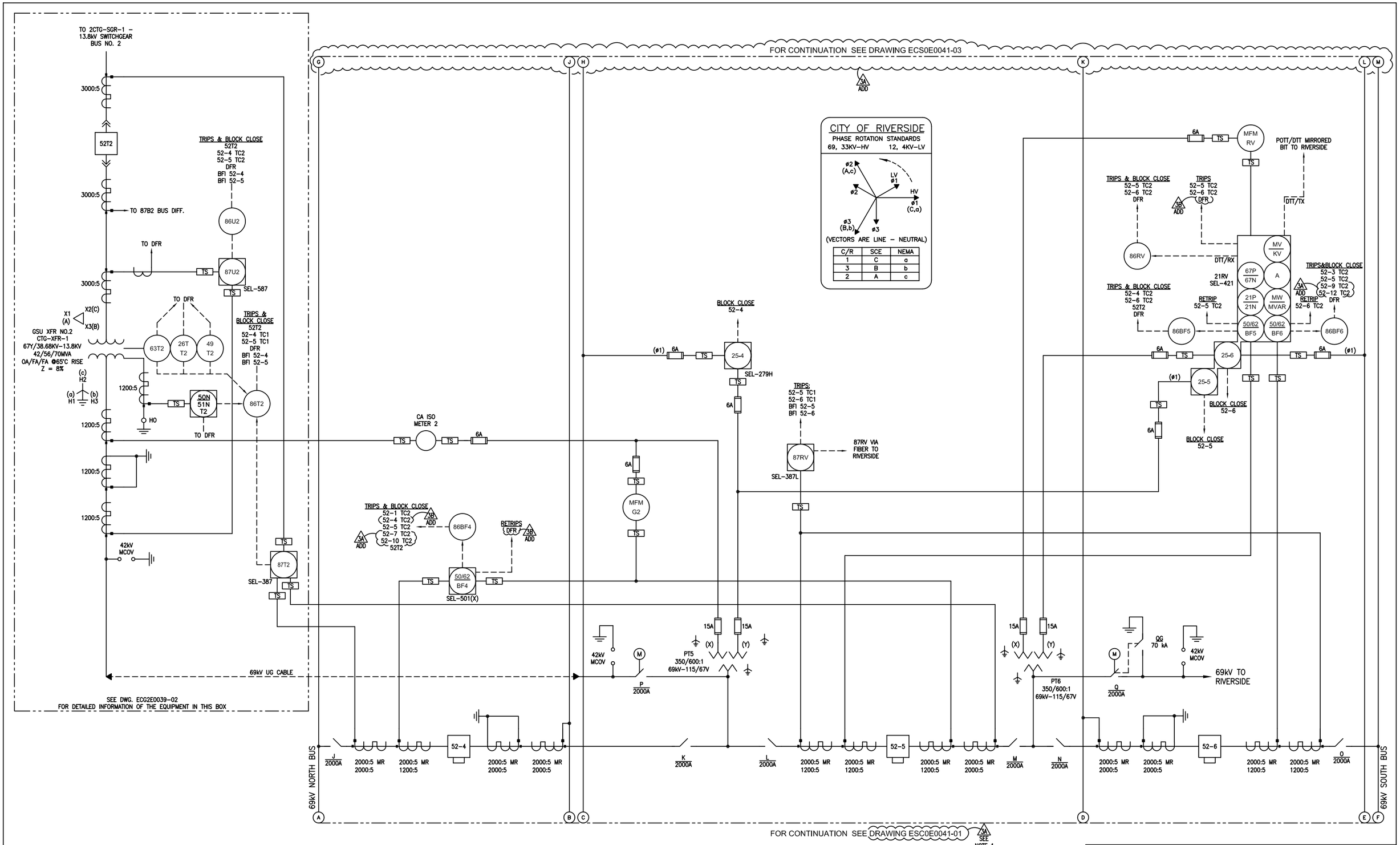

NOTES:

1. AS-BUILT INFORMATION CORRECTED FOR PREVIOUS PROJECT.

ADDITION DRAWING

REV	DESCRIPTION	DR	CHK	APP	DATE
3B	W.O. 0703511 – REVISED PER RPU COMMENTS	JAB	DM	RVE	05/09 08
3A	W.O. 0703511 – ISSUED FOR APPROVAL	PEI	JK	RVE	02/19 08
2	W.O. 632954 – AS-BUILTS	PEI	DM	RVE	05/09 08
1	FINAL AS-BUILT	THM	MIN	SKW	07-27 2006
0	ISSUED FOR CONSTRUCTION	RA	JC	JDR	08-19 05
C	REVISED PER CLIENT'S COMMENTS 5-2-05				05-05

RIVERSIDE ENERGY RESOURCE CENTER
69 kV SWITCHYARD – BAY #2
ELECTRICAL ONE LINE DIAGRAM

SCALE NONE
DATE 01-26-05
JOB NO. T004-004C
DRAWN WS
CHECKED JC
APPROVED CP
DRAWING NO. ECS0E0041-02
SHEET 2 OF 4
FILE NAME: ECS0E0041-02_R3B.DWG

CITY OF RIVERSIDE PUBLIC UTILITIES

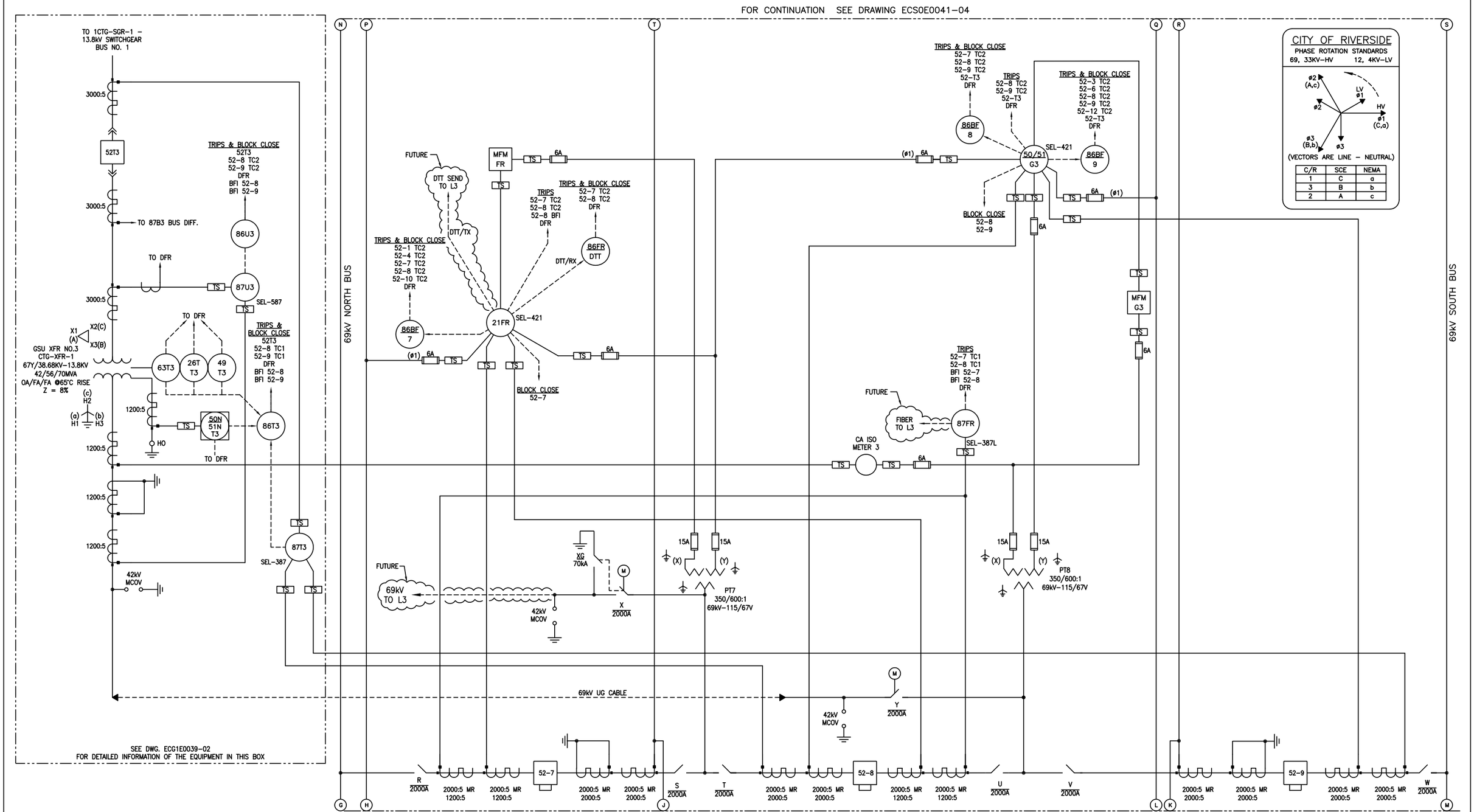

NEW DRAWING

POWER ENGINEERS

REV	DESCRIPTION	DR	CHK	APP	DATE
C	W.O. 0703511 – REVISED PER RPU COMMENTS	JAB	RVE	RVE	05/09 08
B	W.O. 0703511 – ISSUED FOR APPROVAL	OR	JK	RVE	02/19 08
A	W.O. 0703511 – ISSUED FOR REVIEW	JC	BV	RVE	03/05 07

REIVERSIDE ENERGY RESOURCE CENTER
69KV SWITCHYARD – BAY #3
ELECTRICAL ONE LINE DIAGRAM

SCALE	NONE	DRAWN	OR/PEI
DATE	01/31/08	CHECKED	
W.O. NO.	0703511	APPROVED	

DRAWING NO. ECS0E0041-03
SHEET 3 OF 4
FILE NAME: ECS0E0041-03_RC.DWG

CITY OF RIVERSIDE PUBLIC UTILITIES

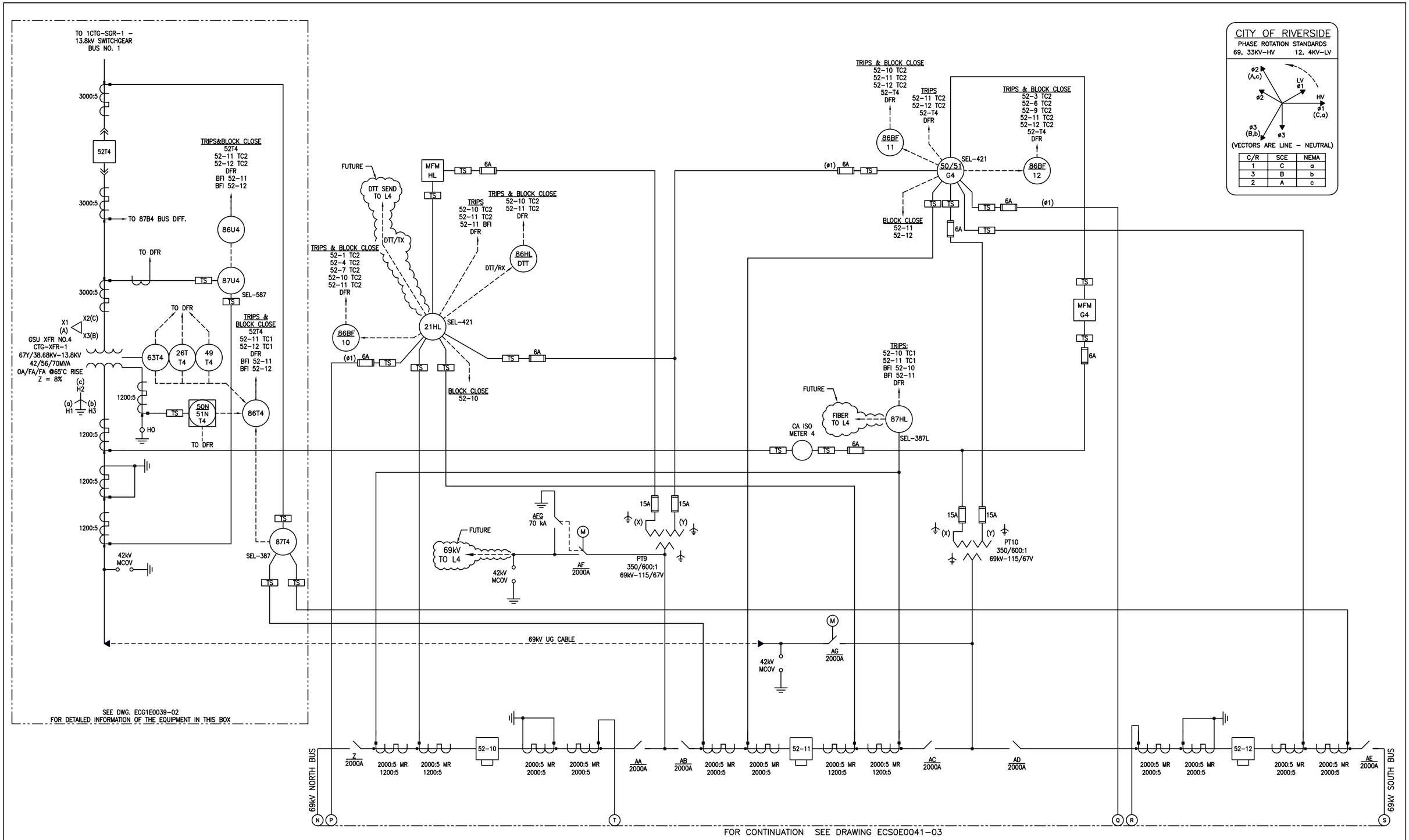

NEW DRAWING

POWER ENGINEERS

REV	DESCRIPTION	DR	CHK	APP	DATE
B	W.O. 0703511 – REVISED PER RPU COMMENTS	JAB	DM	PVE	05/09/08
A	W.O. 0703511 – ISSUED FOR APPROVAL	OR	JK	PVE	02/19/08

RIVERSIDE ENERGY RESOURCE CENTER
69KV SWITCHYARD – BAY #4
ELECTRICAL ONE LINE DIAGRAM

SCALE	NONE	DRAWN	OR/PEI
DATE	01/31/08	CHECKED	
W.O. NO.	0703511	APPROVED	

DRAWING NO. ECS0E0041-04

SHEET 4 OF 4

FILE NAME: ECS0E0041-04_RB.DWG

CITY OF RIVERSIDE PUBLIC UTILITIES

TRANSMISSION SYSTEM ENGINEERING
ATTACHMENT 3

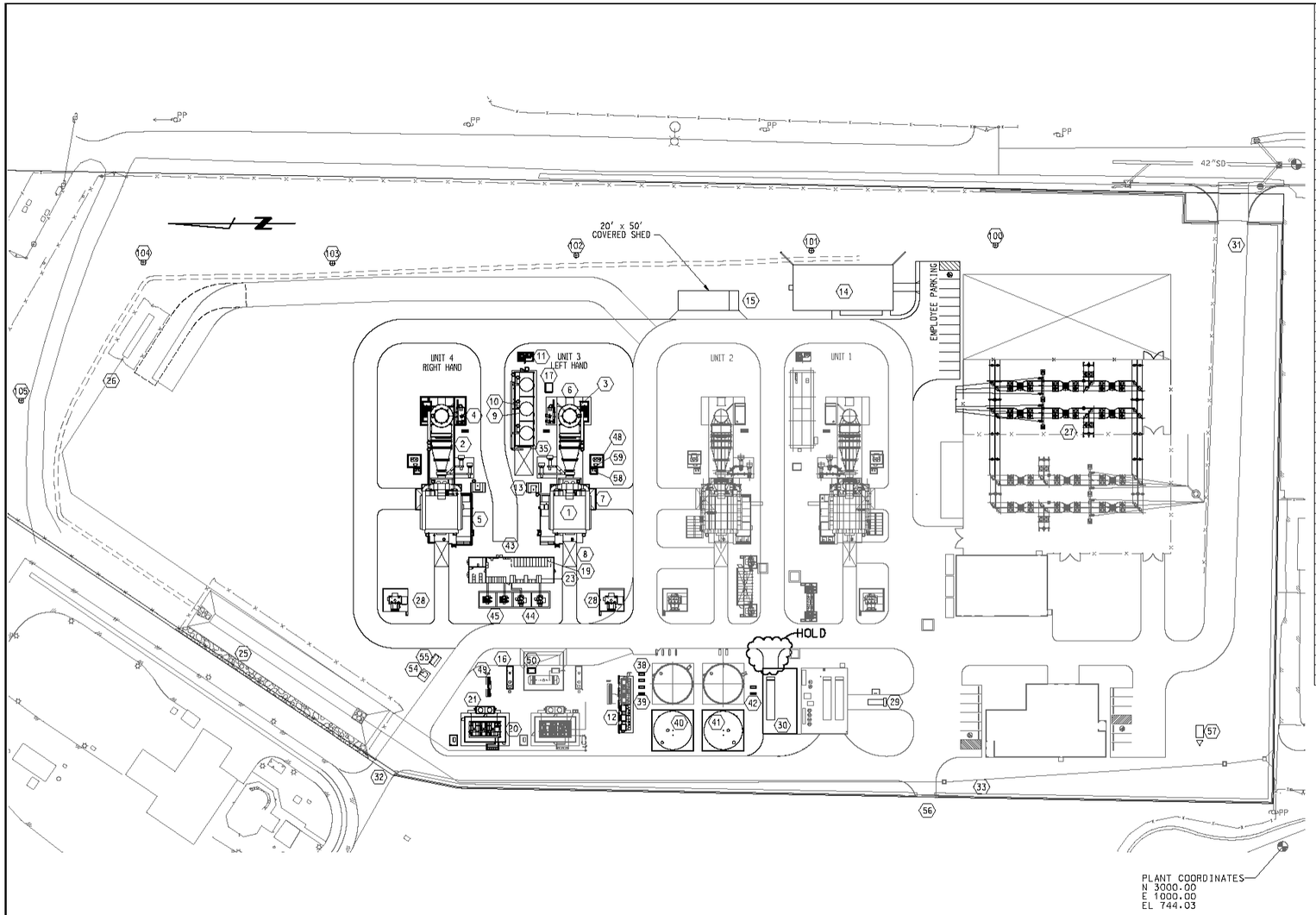

ITEM	DESCRIPTION	NOTES
1	GAS TURBINE GENERATOR (GTG)	
2	EMISSIONS CONTROL MODULE & MCC	
3	EXHAUST STACK	
4	AMMONIA VAPORIZATION SKID	
5	GTG AUXILIARY SKID	
6	CEMS SHELTER	
7	TURBINE REMOVAL AREA	
8	GENERATOR REMOVAL AREA	
9	CHILLER PACKAGE	
10	COOLING TOWER (CT)	
11	COOLING TOWER CHEM FEED SKID	
12	AIR COMPRESSOR/DRYER/RECEIVER SKID	
13	GTG LUBE OIL FIN FAN COOLER	
14	SCHEDULING AND DISPATCH BUILDING	
15	WATER LABORATORY	
16	OIL/WATER SEPARATOR	
17	SIDE STREAM FILTRATION SKID	
18	NOT USED	
19	GTG CONTROL HOUSE	
20	FUEL GAS COMPRESSOR SKID	W/SOUND ENCLOSURE
21	FUEL GAS COMPRESSOR BYPASS COOLER	
22	NOT USED	
23	GTG SWITCHGEAR	
24	NOT USED	
25	STORM WATER RETENTION/INFILTRATION BASIN	
26	GAS METERING STATION	
27	SWITCHYARD	
28	GSU TRANSFORMER (2)	
29	BLACK START GENERATOR	
30	ZERO LIQUID DISCHARGE (ZLD) UNIT	
31	MAIN PLANT ENTRANCE	SLIDE GATE
32	EMERGENCY PLANT ENTRANCE	SLIDE GATE
33	PLANT PERIMETER FENCE (10' HIGH)	
34	NOT USED	
35	TEMPERING AIR FANS	
36	NOT USED	
37	NOT USED	
38	COOLING TOWER MAKEUP WATER PUMPS	
39	DEMINERALIZED WATER PUMPS	
40	DEMINERALIZED WATER TANK	(300,000 gal)
41	DEMINERALIZED WATER TANK	(300,000 gal)
42	RAW WATER PUMPS	
43	POWER DISTRIBUTION CENTER (PDC)	
44	416V AUXILIARY TRANSFORMER (2)	
45	480V AUXILIARY TRANSFORMER (2)	
46	NOT USED	
47	NOT USED	
48	WATER WASH DRAIN TANK	
49	BALANCE OF PLANT MCC	
50	AQUEOUS AMMONIA FORWARDING SKID	
51	NOT USED	
52	NOT USED	
53	NOT USED	
54	ALTERNATE POWER TRANSFORMER	BY RPU
55	ALTERNATE POWER SUPPLY POWER PANEL	BY RPU
56	EQUIPMENT/PERSONNEL ACCESS GATE	
57	COMMUNICATIONS TOWER AND SHED	BY RPU
58	GTG FINAL FUEL FILTER SKID	
59	GTG FINAL FUEL FILTER DRAINS TANK	
100	OWL HABITAT	
101	OWL HABITAT	
102	OWL HABITAT	
103	OWL HABITAT	
104	OWL HABITAT	
105	OWL HABITAT	

NEW DRAWING

REV	DESCRIPTION	DR	CHK	APP	DATE
0	ISSUED FOR CONSTRUCTION	JTS	RW	GTV	04/24/08

POWER ENGINEERS

RIVERSIDE ENERGY RESOURCE CENTER UNITS 3&4

GENERAL ARRANGEMENT

SCALE 1" = 50' | DRAWN J. SMITH | DATE 03/05/08 | CHECKED R. KELLER | P.O. NO. 113560 | APPROVED S. HUSLER

DRAWING NO. ECGDM1101-01

SHEET 1 OF 1

FILE NAME ECGDM1101-01_R0

CITY OF RIVERSIDE
PUBLIC UTILITIES

TRANSMISSION SYSTEM ENGINEERING
ATTACHMENT 4

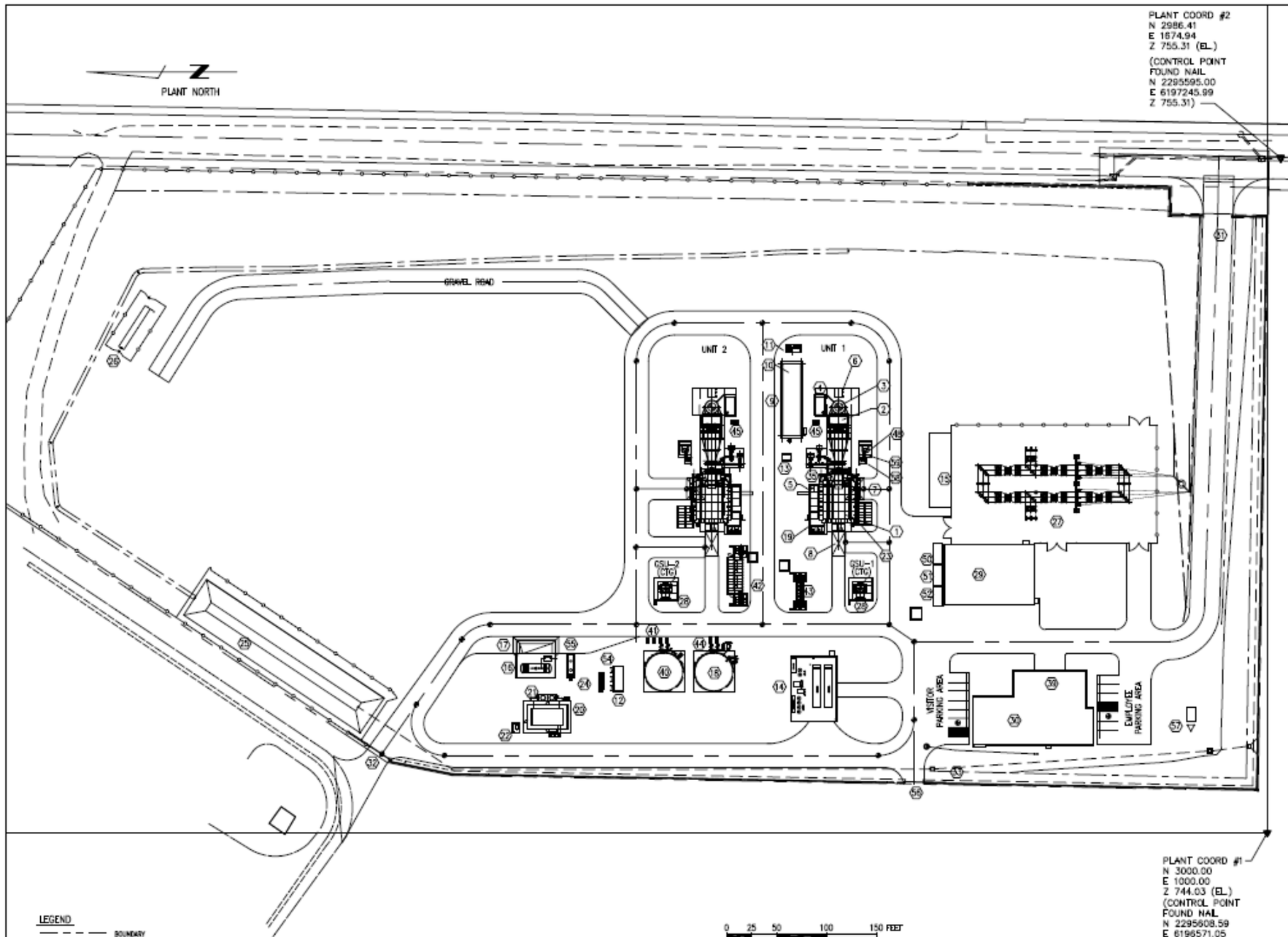

ITEM	DESCRIPTION	NOTES
1	COMBUSTION TURBINE GENERATOR	
2	SELECTIVE CATYLST REDUCTION UNIT	
3	EXHAUST STACK	60' HIGH
4	AMMONIA EVAPORATION SKID	
5	CTG AUXILIARY SKID	
6	CEMS SHELTER	
7	TURBINE REMOVAL AREA	
8	GENERATOR REMOVAL AREA	
9	CHILLER PACKAGE	
10	AUXILIARY COOLING TOWER	
11	AUX COOLING TOWER CHEM FEED SKID	
12	AIR COMPRESSOR/DRYER SKID & RECEIVER	3 COMPRESSORS PER 2 CTG'S
13	CTG LUBE OIL COOLING WATER PUMP SKID	
14	ZERO LIQUID DISCHARGE UNIT	
15	SWITCHYARD CONTROL SHELTER	22' x 75'
16	AQUEOUS AMMONIA STORAGE TANK AND PUMPS (2)	(13800 gal)
17	AQUEOUS AMMONIA UNLOADING PAD	
18	RAW WATER STORAGE TANK	(300,000 gal)
19	CTG CONTROL HOUSE	
20	FUEL GAS COMPRESSOR SKID	INCLUDES SOUND ENCLOSURE
21	FUEL GAS COMPRESSOR BYPASS COOLER	
22	FUEL GAS LIQUID DRAINS TANK	
23	CTG SWITCHGEAR	
24	PROCESS WATER SUMP AND PUMPS	(POWER BLOCK)
25	STORM WATER RETENTION/INFILTRATION BASIN	10' x 30'
26	GAS METERING STATION	
27	SWITCHYARD	
28	GSU TRANSFORMER (2)	
29	WAREHOUSE	60' x 90'
30	ADMINISTRATION/CONTROL BUILDING	72' x 118'
31	MAIN PLANT ENTRANCE	SLIDING GATE
32	EMERGENCY PLANT ENTRANCE	SLIDING GATE
33	PLANT PERIMETER FENCE (10'-0" HIGH)	
34	NOT USED	(2LD AREA)
35	TEMPERING AIR FANS	
36	NOT USED	
37	NOT USED	
38	NOT USED	
39	CONTROL ROOM	
40	DEMINERALIZED WATER TANK & PUMPS (2)	(300,000 gal)
41	COOLING TOWER MAKEUP WATER PUMPS(2)	
42	4160V MCC W/AUXILIARY TRANSFORMER	
43	480V SAS W/AUXILIARY TRANSFORMER	
44	RAW WATER PUMPS (2)	
45	480V SCR AREA MCC	
46	NOT USED	
47	NOT USED	
48	WATER WASH DRAIN TANK	
49	NOT USED	
50	FLAMMABLE STORAGE	8' x 20'
51	WASTE OIL STORAGE	8' x 20'
52	CHEMICAL STORAGE	8' x 20'
53	NOT USED	
54	480V BOP COMMON/GAS COMP. MCC	
55	OIL/WATER SEPARATOR	
56	EQUIPMENT/PERSONNEL ACCESS GATE	SLIDING GATE WITH MAN GATE
57	COMMUNICATION TOWER AND SHED	
58	CTG FINAL FUEL FILTER SKID	
59	CTG FINAL FUEL FILTER DRAINS TANK	

LEGEND

- BOUNDARY
- FENCE
- GAS — EXISTING DIGESTER GAS LINE
- SECURITY WALL

NOTES

1. EQUIPMENT SHOWN ON THIS DRAWING IS BASED ON THE BEST AVAILABLE INFORMATION.

POWER ENGINEERS

TIC Powered by People

Bibb and associates

REV	DESCRIPTION	DR	CHK	APP	DATE
A	ISSUED FOR RERC UNIT 3&4 PERMITTING	DPB	RWK	GTH	05/30/08

RIVERSIDE ENERGY RESOURCE CENTER
UNITS 1 & 2 PLOT PLAN (REFERENCE ONLY)

SCALE 1"=50'	DRAWN D. BLADES	DRAWING NO. ECGOM1001-02	CITY OF RIVERSIDE
DATE 05/29/08	DESIGNED R. KELLER		
JOB NO. 113560	APPROVED G. HARWOOD	SHEET 1 of 1	
		ECGOM1001-02-RA	

TRANSMISSION SYSTEM ENGINEERING
ATTACHMENT 5

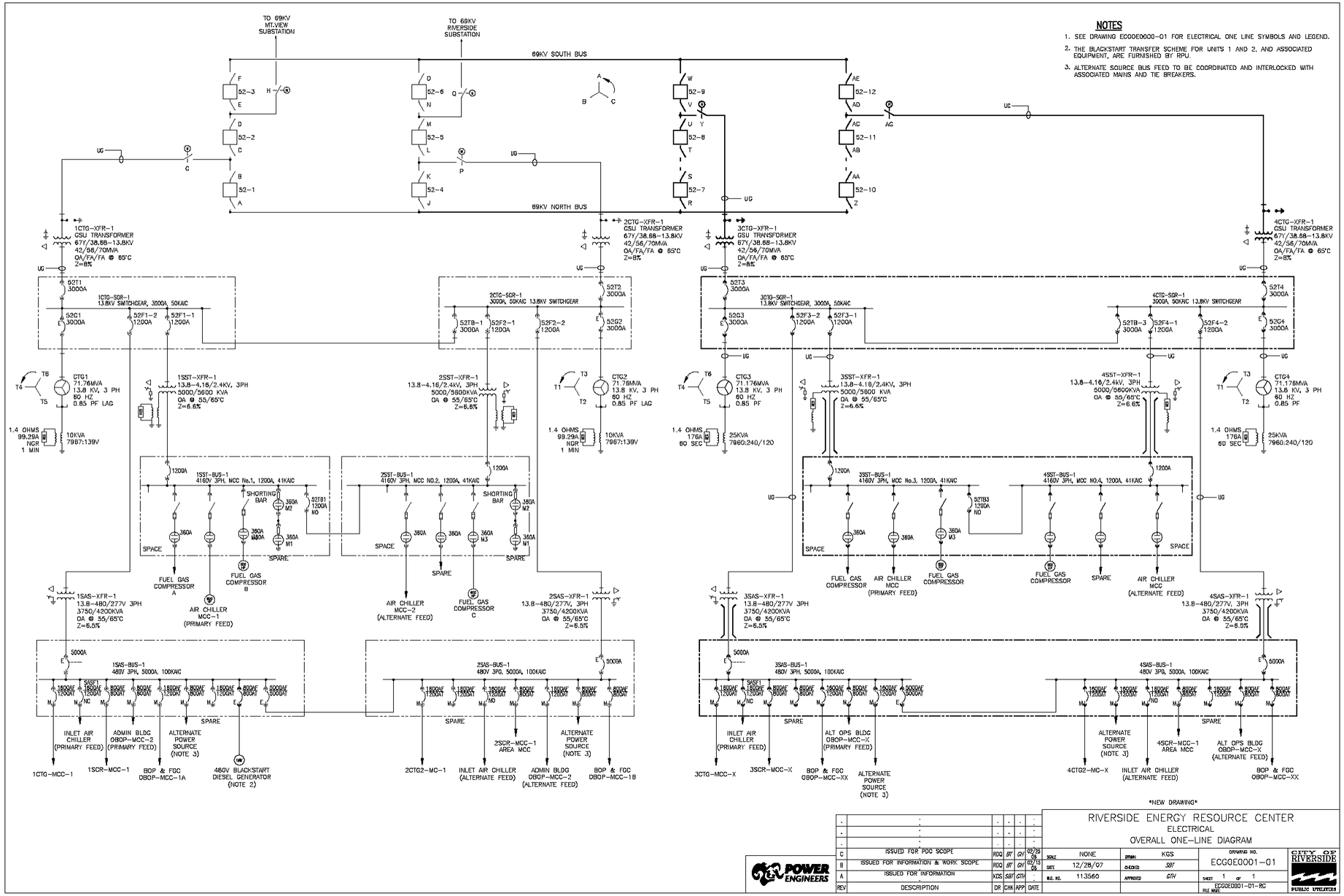
NOTES
1. SEE DRAWING ECG0E0000-01 FOR ELECTRICAL ONE LINE SYMBOLS AND LEGEND.
2. THE BLACKSTART TRANSFER SCHEME FOR UNITS 1 AND 2, AND ASSOCIATED EQUIPMENT, ARE FURNISHED BY RPU.
3. ALTERNATE SOURCE BUS FEED TO BE COORDINATED AND INTERLOCKED WITH ASSOCIATED MAINS AND TIE BREAKERS.
TO 69KV MT.VIEW SUBSTATION
TO 69KV RIVERSIDE SUBSTATION
69KV SOUTH BUS
69KV NORTH BUS
1CTG-XFR-1 GSU TRANSFORMER 67Y/38.68-13.8KV 42/56/70MVA OA/FA/FA @ 65°C Z=8%
2CTG-XFR-1 GSU TRANSFORMER 67Y/38.68-13.8KV 42/56/70MVA OA/FA/FA @ 65°C Z=8%
3CTG-XFR-1 GSU TRANSFORMER 67Y/38.68-13.8KV 42/56/70MVA OA/FA/FA @ 65°C Z=8%
4CTG-XFR-1 GSU TRANSFORMER 67Y/38.68-13.8KV 42/56/70MVA OA/FA/FA @ 65°C Z=8%
1CTG-SGR-1 13.8KV SWITCHGEAR, 3000A, 50KAIC
2CTG-SGR-1 3000A, 50KAIC 13.8KV SWITCHGEAR
3CTG-SGR-1 13.8KV SWITCHGEAR, 3000A, 50KAIC
4CTG-SGR-1 3000A, 50KAIC 13.8KV SWITCHGEAR
CTG1 71.76MVA 13.8 KV, 3 PH 60 HZ 0.85 PF LAG
CTG2 71.76MVA 13.8 KV, 3 PH 60 HZ 0.85 PF LAG
CTG3 71.176MVA 13.8 KV, 3 PH 60 HZ 0.85 PF
CTG4 71.176MVA 13.8 KV, 3 PH 60 HZ 0.85 PF
1SST-XFR-1 13.8-4.16/2.4KV, 3PH 5000/5600 KVA OA @ 55/65°C Z=6.6%
2SST-XFR-1 13.8-4.16/2.4KV, 3PH 5000/5600KVA OA @ 55/65°C Z=6.6%
3SST-XFR-1 13.8-4.16/2.4KV, 3PH 5000/5600 KVA OA @ 55/65°C Z=6.6%
4SST-XFR-1 13.8-4.16/2.4KV, 3PH 5000/5600KVA OA @ 55/65°C Z=6.6%
1SST-BUS-1 4160V 3PH, MCC No.1, 1200A, 41KAIC
2SST-BUS-1 4160V 3PH, MCC NO.2, 1200A, 41KAIC
3SST-BUS-1 4160V 3PH, MCC No.3, 1200A, 41KAIC
4SST-BUS-1 4160V 3PH, MCC NO.4, 1200A, 41KAIC
SHORTING BAR
SPACE
SPARE
FUEL GAS COMPRESSOR A
FUEL GAS COMPRESSOR B
FUEL GAS COMPRESSOR C
AIR CHILLER MCC-1 (PRIMARY FEED)
AIR CHILLER MCC-2 (ALTERNATE FEED)
AIR CHILLER MCC (PRIMARY FEED)
AIR CHILLER MCC (ALTERNATE FEED)
1SAS-XFR-1 13.8-480/277V 3PH 3750/4200KVA OA @ 55/65°C Z=6.5%
2SAS-XFR-1 13.8-480/277V, 3PH 3750/4200KVA OA @ 55/65°C Z=6.5%
3SAS-XFR-1 13.8-480/277V 3PH 3750/4200KVA OA @ 55/65°C Z=6.5%
4SAS-XFR-1 13.8-480/277V, 3PH 3750/4200KVA OA @ 55/65°C Z=6.5%
1SAS-BUS-1 480V 3PH, 5000A, 100KAIC
2SAS-BUS-1 480V 3PG, 5000A, 100KAIC
3SAS-BUS-1 480V 3PH, 5000A, 100KAIC
4SAS-BUS-1 480V 3PG, 5000A, 100KAIC
INLET AIR CHILLER (PRIMARY FEED)
ADMIN BLDG OBOP-MCC-2 (PRIMARY FEED)
ALTERNATE POWER SOURCE (NOTE 3)
480V BLACKSTART DIESEL GENERATOR (NOTE 2)
1CTG-MCC-1
1SCR-MCC-1
BOP & FGC OBOP-MCC-1A
2CTG2-MC-1
INLET AIR CHILLER (ALTERNATE FEED)
2SCR-MCC-1 AREA MCC
ADMIN BLDG OBOP-MCC-2 (ALTERNATE FEED)
BOP & FGC OBOP-MCC-1B
ALT OPS BLDG OBOP-MCC-X (PRIMARY FEED)
3CTG-MCC-X
3SCR-MCC-X
BOP & FGC OBOP-MCC-XX
4CTG2-MC-X
4SCR-MCC-1 AREA MCC
ALT OPS BLDG OBOP-MCC-X (ALTERNATE FEED)
BOP & FGC OBOP-MCC-XX
NEW DRAWING
RIVERSIDE ENERGY RESOURCE CENTER
ELECTRICAL
OVERALL ONE-LINE DIAGRAM
C ISSUED FOR PDC SCOPE RDQ BT GH 02/25 08
B ISSUED FOR INFORMATION & WORK SCOPE RDQ BT GH 02/13 08
A ISSUED FOR INFORMATION KGS SBT GTH
REV DESCRIPTION DR CHK APP DATE
SCALE NONE
DRAWN KGS
DATE 12/28/07
CHECKED SBT
W.O. NO. 113560
APPROVED GTH
DRAWING NO. ECG0E0001-01
SHEET 1 OF 1
ECG0E0001-01-RC
POWER ENGINEERS
CITY OF RIVERSIDE
PUBLIC UTILITIES