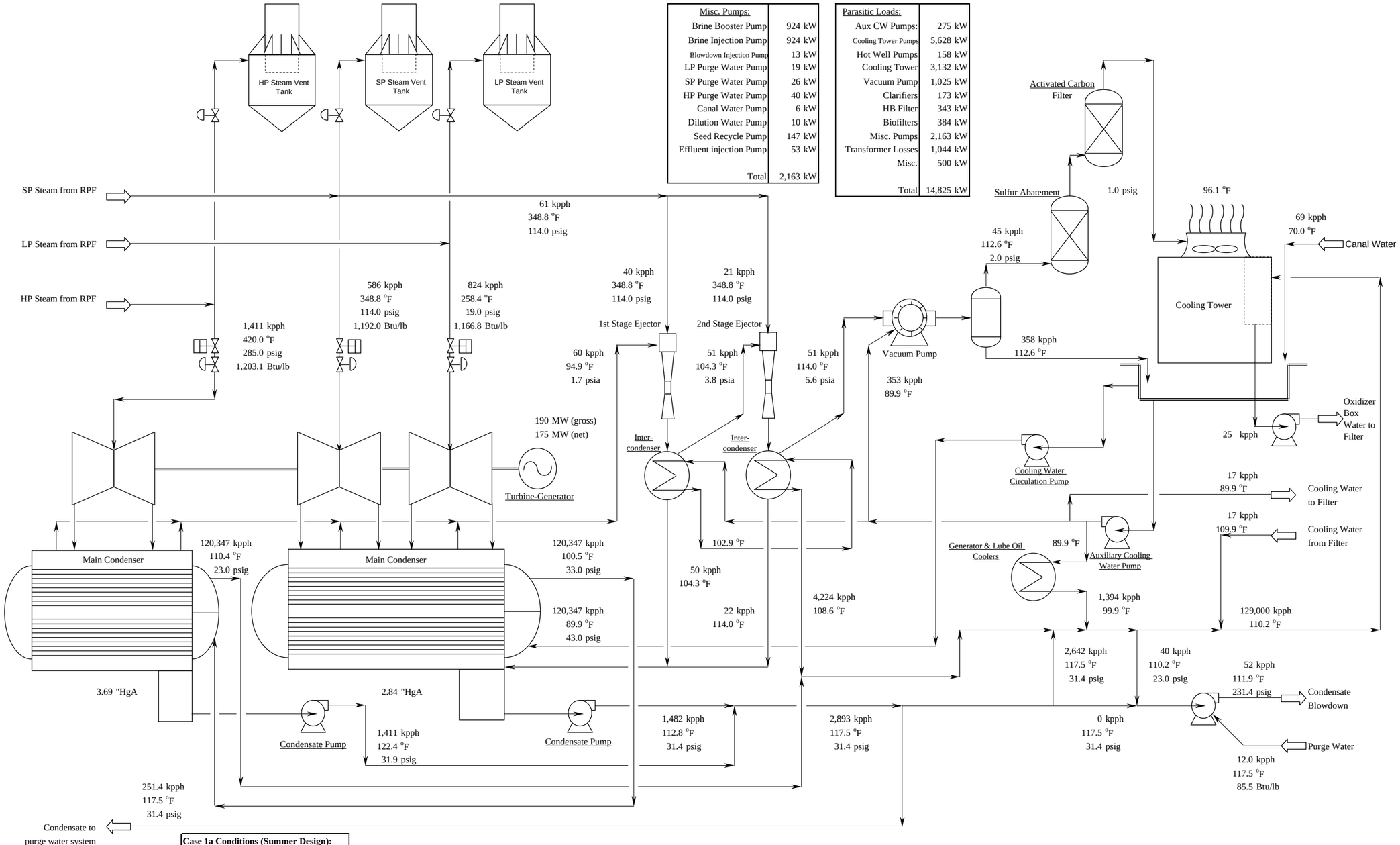

Misc. Pumps:	
Brine Booster Pump	924 kW
Brine Injection Pump	924 kW
Blowdown Injection Pump	13 kW
LP Purge Water Pump	19 kW
SP Purge Water Pump	26 kW
HP Purge Water Pump	40 kW
Canal Water Pump	6 kW
Dilution Water Pump	10 kW
Seed Recycle Pump	147 kW
Effluent injection Pump	53 kW
Total	2,163 kW

Parasitic Loads:	
Aux CW Pumps:	275 kW
Cooling Tower Pumps	5,628 kW
Hot Well Pumps	158 kW
Cooling Tower	3,132 kW
Vacuum Pump	1,025 kW
Clarifiers	173 kW
HB Filter	343 kW
Biofilters	384 kW
Misc. Pumps	2,163 kW
Transformer Losses	1,044 kW
Misc.	500 kW
Total	14,825 kW

Case 1a Conditions (Summer Design):

Brine Enthalpy, Btu/lb	404.8
Brine TDS, wt%	23.5
HP Flash, psig	300.0
SP Flash, psig	120.0
LP Flash, psig	20.0
Dry Bulb Temp., F	105.0
Wet Bulb Temp., F	80.0
Cooling Tower Cells	20
Net Output,MW	175.0

REV	DESCRIPTION		
D	REVISED FILTER WATER SUPPLY	JRB	7-10-02
C	GENERAL REVISION	JRB	5-7-02
B	GENERAL REVISION	JRB	4-18-02
A	ISSUED FOR REVIEW	JRB	3-15-02

KIEWIT PKS SINCE 1884

CALENERGY OPERATING CORPORATION

Unit 6 Development Project
Initial Engineering

Bibb and associates

Salton Sea Unit 6
Heat/Mass Balance
Summer Design Conditions

Power Generation Facility
PFD - Case 2

SHEET 4 of 5

Figure 3.3-10D

DRAWING NUMBER

22-024-PF-002 B