Construction Storm Water Pollution Prevention Plan

For:
San Gabriel Generating Station Project

INSERT GRADING PERMIT NO., BUILDING PERMIT NO., TRACT NUMBER, CUP, SUP AND/OR APN

Prepared for:
San Gabriel Power Generation, LLC.
8996 Etiwanda Avenue
San Bernardino County
Rancho Cucamonga, California 91739
Daniel W. Ross, General Manager
Louis Lee, Operations Manager
(Insert Authorized Representative's Telephone Number)

Contractor (pending):
(Insert Company Name)
(Insert Address)
(Insert City, State and Zip)
(Insert Name of Authorized Representative)
(Insert Authorized Representative's Telephone Number)

Contractor's Storm Water Pollution Prevention Manager
(Insert SWPPM's Name)
(Insert Telephone Number(s))

CSWPPP Prepared by:
Sargent & Lundy LLC
55 E. Monroe Street
Chicago, IL 60603
(312) 269-2402
Douglas J. Dahlberg

SWPPP Preparation Date:
03/28/2007

Estimated Project Dates:
Start of Construction: September 2008 Completion of Construction: July 2010

WDID No.:_____

Contents

Section 100 **CSWPPP Certifications and Approval** 100-1
100.1 SWPPP Certification by Preparer 100-1
100.2 Owner Approval and Certification of SWPPP 100-2
100.3 Annual Compliance Certification 100-3
Section 200 **CSWPPP Amendments** 200-1
200.1 SWPPP Amendment Certification and Approval 200-1
200.2 Amendment Log 200-3
Section 300 **Introduction and Project Description** 300-1
300.1 Introduction and Project Description 300-1
300.2 Unique Site Features 300-2
300.3 Construction Site Estimates 300-2
300.4 Project Schedule/Water Pollution Control Schedule (pending) 300-3
300.5 Contact Information/List of Responsible Parties 300-4
Section 400 References 400-1
Section 500 Objectives 500-1
500.2 Vicinity Map 500-1
500.3 Pollutant Source Identification and BMP Selection 500-1
500.3.1 Inventory of Materials and Activities that May Pollute Storm Water 500-1
500.3.2 Existing (pre-construction) Control Measures 500-2
500.3.3 Nature of Fill Material and Existing Data Describing the Soil 500-3
500.3.4 Erosion Control 500-3
500.3.5 Sediment Control 500-4
500.3.6 Tracking Control 500-5
500.3.7 Wind Erosion Control 500-6
500.3.8 Non-Storm Water Control 500-7
500.3.9 Waste Management and Materials Pollution Control 500-9
500.3.10 Cost Breakdown for Water Pollution Control 500-12
500.4 Water Pollution Control Drawings (WPCDs) 500-12
500.5 Construction BMP Maintenance, Inspection, and Repair 500-12
500.6 Post-Construction Storm Water Management 500-13
500.6.1 Post-Construction Control Practices 500-13
500.6.2 Operation/Maintenance after Project Completion 500-14
500.7 Training 500-14
500.8 List of Subcontractors 500-15
500.9 Other Plans/Permits 500-16

Section 600 Monitoring Program and Reports……..600-1
600.1 Site Inspections.....600-1
600.2 Non-Compliance Reporting.....600-1
600.3 Record Keeping and Reports.....600-2
600.4 Sampling and Analysis Plan for Sediment.....600-2
600.5 Sampling and Analysis Plan for Non-Visible Pollutants.....600-2
600.5.1 Scope of Monitoring Activities.....600-2
600.5.2 Monitoring Strategy.....600-3
600.5.3 Monitoring Preparation 600-5
600.5.4 Analytical Constituents 600-5
600.5.5 Sample Collection and Handling.....600-6
600.5.6 Sample Analysis 600-9
600.5. 7 Quality Assurance/Quality Control.....600-11
600.5.8 Data Management and Reporting.....600-11
600.5.9 Data Evaluation 600-11
600.5.10 Change of Conditions 600-12

CSWPPP Attachments

Attachment A ..... Vicinity Map
Attachment B ..... Water Pollution Control Drawings
Attachment C ..... BMP Consideration Checklist
Attachment D ..... Computation Sheet for Determining Runoff Coefficients
Attachment E ..... Computation Sheet for Determining Run-on Discharges
Attachment F ..... Notice of Intent (NOI)
Attachment G…Program Maintenance, Inspection, Repair of Construction Site BMPs
Attachment H ..... Storm Water Quality Construction Site Inspection Checklist
Attachment I ..... Trained Contractor Personnel Log
Attachment J ..... Subcontractor Notification Letter and Log
Attachment K ..... Notice of Non-Compliance
Attachment L ..... CSWPPP and Monitoring Program Checklist
Attachment M ..... Annual Certification of Compliance Form
Attachment N ..... Other Plans/Permits
Attachment O ..... Water Pollution Control Cost Breakdown
Attachment P ..... Notice of Termination (NOT)
Attachment Q ..... BMPs Selected for the Project
Attachment R ..... Sampling Activity Log
Attachment S... ..... Construction Material and Pollutant Testing Guidance Table – Non-Visible Pollutants
Attachment T ..... Discharge Reporting Log
Attachment U ..... Precipitation Data
Attachment V ..... Intensity/Duration/Frequency Curves
Attachment W ..... San Bernardino County Detention Basin Criteria
Attachment X ..... Existing SWPPP

Section 100

SWPPP Certifications and Approval

100.1 CSWPPP Certification by Preparer

Project Name: San Gabriel Generating Station

Project Number: (Insert Grading Permit No., Building Permit No., Tract Number, CUP, SUP and/or APN)

"I certify under a penalty of law that this document and all attachments were prepared under my direction or supervision in accordance with a system designed to ensure that qualified personnel properly gather and evaluate the information submitted. Based on my inquiry of the person or persons who manage the system or those persons directly responsible for gathering the information, to the best of my knowledge and belief, the information submitted is true, accurate, and complete. I am aware that there are significant penalties for submitting false information, including the possibility of fine and imprisonment for knowing violations."

	03-28-07
Preparer's Signature	Date
Douglas J. Dahlberg	312-692-2402
Preparer's Name and Title	Telephone Number

100.2 Owner Approval and Certification of CSWPPP

Owner's (or Authorized Representative)
Approval and Certification of the
Storm Water Pollution Prevention Plan

Project Name: San Gabriel Generating Station

Project Number: (Insert Grading Permit No., Building Permit No., Tract Number, CUP, SUP and/or APN)

"I certify under a penalty of law that this document and all attachments were prepared under my direction or supervision in accordance with a system designed to ensure that qualified personnel properly gather and evaluate the information submitted. Based on my inquiry of the person or persons who manage the system or those persons directly responsible for gathering the information, to the best of my knowledge and belief, the information submitted is true, accurate, and complete. I am aware that there are significant penalties for submitting false information, including the possibility of fine and imprisonment for knowing violations."

Owner (or Authorized Representative) Signature	Date
Name and Title	Telephone Number

100.3 Annual Compliance Certification

By July 1 of each year, the Owner will complete an Annual Certification of Compliance stating compliance with the terms and conditions of the Permit and the CSWPPP. The blank Annual Certification of Compliance Form is included in Attachment M. Completed Annual Certifications of Compliance and Approvals can be found in the following pages.

Section 200
SWPPP Amendments

200.1 CSWPPP Amendment Certification and Approval

This CSWPPP shall be amended:

- Whenever there is a change in construction or operations which may affect the discharge of pollutants to surface waters, groundwater(s), or a municipal separate storm sewer system (MS4); or
- If any condition of the Permits is violated or the general objective of reducing or eliminating pollutants in storm water discharges has not been achieved. If the RWQCB determines that a Permit violation has occurred, the CSWPPP shall be amended and implemented within 14-calendar days after notification by the RWQCB;
- Annually, prior to the defined rainy season; and
- When deemed necessary by the Owner.

The following items will be included in each amendment:

- Party requesting the amendment.
- The location of proposed change.
- The reason for change.
- The original BMP proposed, if any.
- The new BMP proposed.

The amendments for this SWPPP, along with the Owner's Certification and the Owner approval, can be found in the following pages. Amendments are listed in the Amendment Log in section 200.2

SWPPP Amendment No.

Project Name: San Gabriel Generating Station

Project Number: (Insert Grading Permit No., Building Permit No., Tract Number, CUP, SUP and/or APN))

Preparer Certification of the Construction Storm Water Pollution Prevention Plan Amendment

"I certify under a penalty of law that this document and all attachments were prepared under my direction or supervision in accordance with a system designed to ensure that qualified personnel properly gather and evaluate the information submitted. Based on my inquiry of the person or persons who manage the system or those persons directly responsible for gathering the information, to the best of my knowledge and belief, the information submitted is true, accurate, and complete. I am aware that there are significant penalties for submitting false information, including the possibility of fine and imprisonment for knowing violations."

Preparer's Signature	Date
Preparer's Name and Title	Telephone Number

Owner (or Owner's Authorized Representative) Approval of the Construction Storm Water Pollution Prevention Plan Amendment

"I certify under a penalty of law that this document and all attachments were prepared under my direction or supervision in accordance with a system designed to ensure that qualified personnel properly gather and evaluate the information submitted. Based on my inquiry of the person or persons who manage the system or those persons directly responsible for gathering the information, to the best of my knowledge and belief, the information submitted is true, accurate, and complete. I am aware that there are significant penalties for submitting false information, including the possibility of fine and imprisonment for knowing violations."

Owner (or Authorized Representative) Signature	Date
Name and Title	Telephone Number

200.2 Amendment Log

Project Name: San Gabriel Generating Station

Project Number: (Insert Grading Permit No., Building Permit No., Tract Number, CUP, SUP and/or APN)

Amendment No.	Date	Brief Description of Amendment	Prepared By

Section 300
Introduction and Project Description

300.1 Introduction and Project Description

This Construction Storm Water Pollution Prevention Plan (CSWPPP) was prepared for the San Gabriel Generating Station (SGGS) Project. The proposed project consists of 656 MW base load combined cycle facility. Refer to Attachment A for a site vicinity map.

The combined cycle base load facility will operate year round. The project will operate for the purpose of generating power that can be used to serve existing and future load in the Southern California region. The project will be interconnected to the regional transmission grid via transmission interconnections to Southern California Edison (SCE).

The SGGS project site is located in the City of Rancho Cucamonga, California. The property comprises approximately 16.2 acres within the EGS property and measures about 1,100 feet in an east-west direction by an average of 640 feet in a north-south direction. An additional 0.8 acres (852' x 40') along the southern perimeter of the site will be purchased or leased from IEUA for installation of an east-west transmission corridor. Therefore, the total area for the SGGS project is approximately 17 acres. A north-south segment of the transmission corridor comprising 0.67 acres (100' x 292') will be leased from Inland Empire.

A temporary lease of 5.04 acres of IEUA land to be used as construction laydown is located immediately south and adjacent to the SGGS site. Approximately 1.17 acres of the IEUA land is occupied by two above ground tanks, yielding a useable laydown area of approximately 4.5 acres. An additional 7.15 acres will be used within the existing EGS property as laydown space. Additional construction laydown (4.1 acres) and construction parking (7.1 acres) will be on an offsite property located about 1,250 feet west of the SGGS site.

The Burlington Northern-Santa Fe Railroad (BNSF) tracks border the northern side of the site on the west. The eastern side of the EGS property is on Etiwanda Ave. The southern and western sides of the EGS property are adjacent to a Southern California Edison switchyard. 6th street is located south of the southernly switchyard. Construction access will be from 6th street and then north along the temporary access road. Attachment B presents site conditions before, during and after construction, along with laydown and parking areas, access road, and erosion and sediment control details.

The CSWPPP has been prepared in accordance with the requirements of General Discharge Permit for Storm Water Discharges Associated with Construction Activities Disturbing One or More acres (Construction General Permit) issued by the California Regional Water Quality Control Board, Santa Ana Region. A copy of the existing operational SWPPP permit is included in Attachment N.

300.2 Unique Site Features

Soils at the project site are silty sands containing gravel and cobbles, characteristic of sediment deposition associated with the alluvial fan. The soils are relatively loose and permeable with sparse vegetation.

About half of the northern portion of plant site currently has vegetation, which consists of brush and some plantings. The southern half of the site is currently occupied by an abandoned cooling tower and a pump station. The cooling tower and pump station will be demolished, the vegetation on the site cleared and grubbed, and the site graded to about Elevation 1,119 ft as part of demolition activities that will be completed prior to construction of the SGGS project. The high point of finished surface will be elevation 1,120 ft.

About 2/3 of the offsite construction parking area consists of an ungraded sand dune that has been disturbed by bikers who use it on weekends. The remaining 1/3 is a depression that has been eroded by storm water outflow from six 48”-diameter drainage culverts discharging beneath the BNSF tracks to the north of the site. Storm water drains through the site and into a 72-inch RCP culvert. The vegetation will be removed, the area smoothed and surfaced with crushed rock and then used as a construction parking lot.

Areas to be disturbed for the SGGS project include the combined cycle power plant area, the temporary parking and laydown areas west of the site, and the adjacent construction laydown area (owned by IEUA). The laydown areas within the EGS property will not be disturbed and will therefore not be discussed further in regard to erosion control features.

300.3 Construction Site Estimates

The following are estimates of the construction site:

Construction site area	16.93	acres
Percentage impervious area before construction	16.5	%
Runoff coefficient before construction (1)	0.30	
Percentage impervious area after construction	49	%
Runoff coefficient after construction (1)	0.60	
Anticipated storm water flow on to the construction site (2)	N/A	Cfs

(1) Calculations are shown in Attachment D
(2) Calculations are shown in Attachment E, See note at bottom of sheet

300.4 Project Schedule/Water Pollution Control Schedule (pending)

Site mobilization/Construction – September 2008

To minimize the potential for erosion and offsite sediment transport. The following implementation schedule will be employed for installation of control features:

- Install construction entrance-tracking control at entrance.-September 2008
- Construct temporary access road. –September 2008
- Install perimeter temporary and permanent security fencing and attach silt fencing as noted on plan.-September 2008
- Install balance of silt fencing noted on plan.-September 2008
- Install Velocity Dissipation Device at outfall into Chadwick Creek.-September 2008
- Regrade and stabilize surface of laydown/parking areas-October 2008
- First install Earth Dikes & Drainage Swales then install ditch check and dams.-October 2008
- Construct sediment/trap and direct runoff from all grading areas to the basin.-October 2008
- Install sediment-trap ditch checks silt fencing or straw bales around inlet catch basins or culverts as they are constructed.-October 2008
- Build containment areas for hazardous material equipment maintenance and fueling and waste handling areas.-October 2008
- Construct permanent sediment/detention basin and divert flow through basin.-October 2008
- Remove/restore sediment trap. Apply aggregate surfacing as soon as practical.-October 2008
- Site preparation: Clearing and grubbing-October 2008
- Install temporary concrete washout-October 2008
- Initial site work and underground piping-September 2008-February 2009
- Rainy season begins – October 2008
- Complete grading- March 2009
- Install heat recovery steam generators, combustion & steam turbines; air cooled condenser, and transformer foundations-November 2008 – July 2009.
- Install HRSG, CT, SS, and ACC- January 2008 – February 2010
- Rainy season ends – April 2009
- Recertify SWPPP – July 2008
- Recertify SWPPP – July 2009
- Rainy season begins – October 2009
- Remove concrete washout and restore area to original grade. – December 2009
- Remove and regrade hazardous waste and material handling, equipment fueling and maintenance areas. – December 2009
- Complete remaining paving and surfacing – January 2010
- End of construction – February 2010
- Implement operational SWPPP BMPs. Remove silt fencing and inlet protection. – March 2010
- Rainy season ends – April 2010
- End of startup/commissioning – July 2010

Ongoing requirements

- Apply water on loose soil areas as required to limit wind erosion, throughout construction.
- Monitor weather daily for rainfall prediction sand adjust construction schedule where possible to limit erosion.
- Modify construction grading schedule when practical to avoid extended rainy-wet periods.
- Employ non-storm water BMPs as needed.
- Stabilize and protect stockpiles
- Inspections – per Attachment G
  - Pre-storm inspections
  - Storm event inspections/sampling
  - Post-storm inspections
- Amend permit as required
- Remove soil from adjacent city streets

300.5 Contact Information/List of Responsible Parties

The Construction Storm Water Pollution Prevention Manager (CSWPPM), for the contractor, assigned to this project is:

(Insert **SWPPM's Name**)

(Insert Telephone **Number(s)**)

The CSWPPM shall have primary responsibility and significant authority for the implementation, maintenance, inspection and amendments to the approved CSWPPP. The CSWPPM will be available at all times throughout the duration of the project. Duties of the CSWPPM include but are not limited to:

- Ensuring full compliance with the CSWPPP and the Permit
- Implementing all elements of the CSWPPP, including but not limited to:
  - Implementation of prompt and effective erosion and sediment control measures
  - Implementing all non-storm water management, and materials and waste management activities such as: monitoring discharges (dewatering, diversion devices); general site clean-up; vehicle and equipment cleaning, fueling and maintenance; spill control; ensuring that no materials other than storm water are discharged in quantities which will have an adverse effect on receiving waters or storm drain systems; etc.
  - The existing operational storm water pollution prevention plan will be amended to incorporate the combined cycle area.

- Pre-storm inspections
- Storm event inspections
- Post-storm inspections
- Routine inspections as specified in the project's specifications or described in the CSWPPP
- Updates/Amendments to the CSWPPP, as needed
- Preparing annual compliance certification for owner's, or owner's authorized representative, signature
- Ensuring elimination of all unauthorized discharges
- The CSWPPM shall be assigned authority by the Contractor to mobilize crews in order to make immediate repairs to the control measures
- Coordinate with the Contractor to assure all of the necessary corrections/repairs are made immediately, and that the project complies with the CSWPPP, the Permit and approved plans at all times
- Submitting Notices of Discharge and reports of Illicit Connections or Illegal Discharges

Section 400

400.1 References

The following documents are made a part of this CSWPPP by reference:

- Project plans and specifications **(will be developed during final design)**
- State Water Resources Control Board (SWRCB) Order No. 99-08-DWQ, National Pollutant Discharge Elimination System (NPDES) General Permit No. CAS000002, Waste Discharge Requirements (WDRs) for Discharges of Storm Water Runoff Associated with Construction Activity.
- California Storm water BMP Handbook – Construction, January 2003
- California Storm water BMP Handbook-Section 3, Erosion and Sediment BMPs
- San Bernardino County Storm water Program Model Water Quality Management Plan Guidance, June 09, 2005
- Detention Basin Design for San Bernardino County and associated, inter office memo dated 9-4-1987 from the Water Resources Division
- San Bernardino Storm water Program, Water Quality Management Plan, Guidance & Template.
- SWPPP Plan and Monitoring Program for Existing Site Operations

Section 500

500.1 Objectives

This Construction Storm Water Pollution Prevention Plan (CSWPPP) has six main objectives:

- Identify all pollutant sources, including sources of sediment that may affect the quality of storm water discharges associated with construction activity (storm water discharges) from the construction site, and
- Identify non-storm water discharges, and
- Identify, construct, implement in accordance with a time schedule, and maintain Best Management Practices (BMPs) to reduce or eliminate pollutants in storm water discharges and authorized non-storm water discharges from the construction site during construction, and
- Develop a maintenance schedule for BMPs installed during construction designed to reduce or eliminate pollutants after construction is completed (post-construction BMPs).
- Identify a sampling and analysis strategy and sampling schedule for discharges from construction activity which discharge directly into water bodies listed on Attachment 3 of the Permit (Clean Water Act Section 303(d) [303(d)] Water Bodies listed for Sedimentation).
- For all construction activity, identify a sampling and analysis strategy and sampling schedule for discharges that have been discovered through visual monitoring to be potentially contaminated by pollutants not visually detectable in the runoff.

This CSWPPP conforms to the required elements of the General Permit No. CAS000002 issued by the State of California, State Water Resources Control Board (SWRCB). This CSWPPP will be modified and amended to reflect any amendments to the Permit or any changes in construction or operations that may affect the discharge of pollutants from the construction site to surface waters, groundwaters, or the municipal separate storm sewer system (MS4). The CSWPPP will also be amended if it is in violation of any condition of the Permit or has not achieved the general objective of reducing pollutants in storm water discharges. The CSWPPP shall be readily available on-site for the duration of the project.

500.2 Vicinity Map

The construction project vicinity map showing the project location, surface water boundaries, geographic features, construction site perimeter, and general topography, is located in Attachment A. The project's Title Sheet provides more detail regarding the project location and is also included in Attachment A. Attachment B provides additional drawings that depict project specific conditions.

500.3 Pollutant Source Identification and BMP Selection

500.3.1 Inventory of Materials and Activities that May Pollute Storm Water

The following is a list of construction materials that will be used and activities that will be performed that will have the potential to contribute pollutants, other than sediment, to storm water runoff (control

practices for each activity are identified in the Water Pollution Control Drawings (WPCDs) and/or in Sections 500.3.4 through 500.3.9:

- Sediment from grading activities
- Petroleum products such as oil and grease, hydraulic fluids, engine coolant, diesel fuel from construction vehicles and equipment
- Building materials such as asphalt, concrete and sealant
- Paints
- Solvents
- Washwater from truck wheel washing and concrete transfer chutes
- Hydrotest water from pipeline flushing and
- Trash and debris

Construction activities that have the potential to contribute sediment to storm water discharges include:

- Clearing & Grubbing
- Topsoil Stripping & Stockpiling
- Excavation and Filling
- Grading and Leveling
- Dewatering

Attachment C lists all Best Management Practices (BMPs) that have been selected for implementation in this project. Implementation and location of BMPs are shown on the WPCDs in Attachment B. Narrative descriptions of BMPs to be used during the project are listed by category in each of the following CSWPPP sections. Attachment Q includes a list, and/or copies of the fact sheets of all the BMPs selected for this project.

500.3.2 Existing (pre-construction) Control Measures

The following are existing (pre-construction) control measures encountered within the project site:

- This CSWPPP covers the 16.93 acre parcel for development of combined cycle generating facility. This plan also addresses erosion and sediment controls for areas to be disturbed during construction including the temporary offsite 7.1-acre parking and 4.1-acre laydown parcels located west of the SGGS site, and the useable 4.54 acres of leased IEUA property south of the SGGS site. The additional 7.15 acres within the EGS property that may be used as laydown areas are not considered in this plan because those areas will not be regraded and they are currently surfaced with aggregate or asphalt. Only the 16.93 acre portion of the

SGGS site is being redeveloped. Therefore, this is the area considered for post-construction storm water detention requirements.

- The current site drainage patterns consist of sheet flow to the east and southeast corner where surface water discharges in Chadwick Channel. Chadwick Channel drains south to a retention basin approximately 1200' south of the construction area.

- During initial site construction activities storm water runoff will be directed through a temporary sediment trap prior to discharging to Chadwick Channel. Once the permanent sedimentation/detention basin is installed storm water runoff will be directed through the basin and the temporary sediment trap will be removed. A conceptual cross section of the sedimentation/detention basin is shown on drawing CSWPPP-007. Detailed design of the basin will be prepared with the plant plans and specifications per San Bernardino County Flood Control District requirements for a 100-yr event. The erosion control protection installed in the side bank of Chadwick Channel for the temporary sediment trap will also be used for the outlet of the permanent basin.

- The laydown areas within the EGS property will have no change to the surfacing or grading. The only change will occur in the temporary equipment storage.

- There will be a detention/sediment concrete lined basin installed. However, until it is installed there will be a temporary one immediately south of the permanent basin.

500.3.3 Nature of Fill Material and Existing Data Describing the Soil

No incoming fill/borrow soil material or off-site soil disposal is proposed for this construction project. On-site soil will be regraded to establish proposed final surface elevations.

500.3.4 Erosion Control

Erosion control, also referred to as soil stabilization, consists of source control measures that are designed to prevent soil particles from detaching and becoming transported in storm water runoff. Erosion control BMPs protects the soil surface by covering and/or binding soil particles. This project will incorporate erosion control measures required by the contract documents, and other measures selected by the Contractor, CSWPPP Manager, or Owner. This project will implement the following practices for effective temporary and final erosion control during construction:

1) Apply temporary erosion control to remaining active and non-active areas as required by the California Storm water BMPs Handbook – Construction, and the contract documents. Reapply as necessary to maintain effectiveness.

2) Implement temporary erosion control measures at regular intervals throughout the defined rainy season to achieve and maintain the contract's disturbed soil area requirements. Implement erosion control prior to the defined rainy season.

3) Stabilize non-active areas as soon as feasible after the cessation of construction activities.

4) Control erosion in concentrated flow paths by applying erosion control blankets, erosion control seeding, and lining swales as required in the contract documents.

5) At completion of construction, apply permanent erosion control to all remaining disturbed soil areas.

Sufficient erosion control materials will be maintained on-site to allow implementation in conformance with Permit requirements and described in this CSWPPP. This includes implementation requirements for active areas and non-active areas that require deployment before the onset of rain.

Implementation and locations of temporary erosion control BMPs are shown on the Water Pollution Control Drawings (WPCDs) in Attachment B and/or described in this section. The BMP Consideration Checklist in Attachment C indicates the BMPs that will be implemented to control erosion on the construction site; these are:

- EC-1, Scheduling
- EC-9, Earth Dikes and Drainage Swales
- EC-10, Velocity Dissipation Devices

500.3.5 Sediment Control

Sediment controls are structural measures that are intended to complement and enhance the selected erosion control measures and reduce sediment discharges from active construction areas. Sediment controls are designed to intercept and settle out soil particles that have been detached and transported by the force of water. This project will incorporate sediment control measures required by the contract documents, and other measures selected by the Contractor, CSWPPP Manager, or Owner.

Sufficient quantities of temporary sediment control materials will be maintained on-site throughout the duration of the project, to allow implementation of temporary sediment controls in the event of predicted rain, and for rapid response to failures or emergencies, in conformance with other Permit requirements and as described in this CSWPPP. This includes implementation requirements for active areas and non-active areas before the onset of rain.

Implementation and locations of temporary sediment control BMPs are shown on the Water Pollution Control Drawings (WPCDs) in Attachment B. The BMP Consideration Checklist in Attachment C indicates all the BMPs that will be implemented to control sediment on the construction site; these are:

- SE-4, Check Dams
- SE-10, Storm Drain Inlet Protection
- SE-9, Straw Bale Barrier

- SE-1, Silt Fence
- SE-3, Sediment Trap
- EC-9, Earth Dikes & Drainage Swales
- EC-10, Velocity Dissipation Devices

Implementation of Temporary Sediment Controls

- Temporary sediment control BMPs will be deployed according to the schedule shown in CSWPPP Section 300.4.
- During the rainy season, temporary sediment controls will be implemented at the draining perimeter of disturbed soil areas, at the toe of slopes, at storm drain inlets and at outfall areas at all times.
- During the non-rainy season, temporary sediment controls will be implemented at the draining perimeter of disturbed soil areas and at storm drain downstream from disturbed areas before rain events.
- As shown on the WPCDs, silt fences will be deployed along the toe of exterior slopes to filter storm water runoff.
- Storm drain inlet protection will be used at all operational internal inlets to the storm drain system during the rainy season as shown on the WPCDs.
- During the non-rainy season, in the event of a predicted storm, the following temporary sediment control materials will be maintained on-site: silt fence materials, sandbags for linear barriers, fiber rolls

500.3.6 Tracking Control

BMPs to Reduce Sediment Tracking

Stabilized Construction Entrance/Exit

- A stabilized construction entrance/exit will be constructed and maintained at construction site entrances and exits, equipment yard, PCC batch plants and crushing plants, water filling area for water trucks, and project office location, as shown on the site map.
- The site entrance/exit will be stabilized to reduce tracking of sediment as a result of construction traffic. The entrance will be designated and graded to prevent runoff from leaving the site. Stabilization material will be 3 to 6-inch aggregate. The entrance will be flared where it meets the existing road to provide an adequate turning radius. During dirt-hauling activities that extend over a one-week time period, a site entrance/exit will be installed to reduce tracking of sediment.

Stabilized Construction Roadway

- The construction roadway through the site will also be designated and stabilized to prevent erosion and to control tracking of mud and soil material onto adjacent roads. The roadway will be clearly marked for limited speed to control dust. Refer to the WPCDs for entrance/exit and construction roadway locations. Stabilization material will be 3 to 6-inch aggregate. A regular maintenance program will be conducted to replace sediment-clogged stabilization material with new stabilization material.

Road Cleaning BMPs – Street Sweeping and Vacuuming

Road sweeping and vacuuming will occur during soil hauling and as necessary to keep street surfaces clear of soil and debris. Washing of sediment tracked onto streets into storm drains will not occur. The following BMPs have been selected to reduce sediment tracking from the construction site onto private or public roads:

- SE-7, Street Sweeping and Vacuuming- The dirt road adjacent to the construction site's entrances and exits shall be swept as needed to keep the street clean of accumulated sediment.
- SE-1, Silt Fence- The silt fence detains sediment-laden water, promoting sedimentation behind the fence.
- SE-3, Sediment Trap- This acts as a containment area where sediment-laden runoff is temporarily detained under inactive conditions, allowing sediment to settle out or before the runoff is discharged.
- Construct and maintain temporary stone construction entrance to prevent track-out of sediments onto paved roadways.
- During construction, stabilize exposed areas with temporary ground cover (e.g. temporary seeding, mulch, chemical and fabric stabilizers), to protect the soil from erosion until permanent vegetation or other site stabilization features are installed.
- After project is completed, selected areas of the site (e.g., roadways and parking areas) will be paved with bituminous asphalt, concrete, or equivalent. The remainder of the site (not covered with power plant structures and facilities) will be stabilized with a uniform cover of stone or gravel.

500.3.7 Wind Erosion Control

The following BMPs have been selected to control dust from the construction site:

- WE-1, Wind Erosion Control

- Potable water will be applied to disturbed soil areas of the project site to control dust and maintain optimum moisture levels for compaction. The water will be applied using water trucks. As shown

on the project schedule, project soils will be disturbed and exposed for approximately 20 months. Water applications will be concentrated during the late summer and early fall months and especially during the grading operations.

- BMP WE-1, Wind Erosion Control, and BMP NS-1, Water Conservation Practices, will be implemented to provide dust control and prevent discharges from dust control activities and water supply equipment. Water application rates will be minimized as necessary to prevent runoff and ponding and water equipment leaks will be repaired immediately.

- During windy conditions (forecast or actual wind conditions of approximately 25 mph or greater), dust control will be applied to disturbed areas, including haul roads, to adequately control wind erosion.
- BMP WM-3, Stockpile Management, using silt fences and plastic covers will be implemented to prevent wind dispersal of sediment from stockpiles.

The following BMPs have been selected to control dust from the construction site:

- WE-1, Wind Erosion Control- if soil is observed on public streets, dirt will be cleaned up and water will be applied to the ground surface.

- BMP WE-1, Wind Erosion Control, will be implemented to provide dust control and prevent discharges from dust control activities and water supply equipment. Water application rates will be minimized as necessary to prevent runoff and ponding and water equipment leaks will be repaired immediately.

- During windy conditions (forecast or actual wind conditions of approximately 25 mph or greater), dust control will be applied to disturbed areas, including haul roads, to adequately control wind erosion.

500.3.8 Non-Storm Water Control

An inventory of construction activities and potential non-storm water discharges is provided in Section 5.3.1. The BMP Consideration Checklist in Attachment C and the following list indicates the BMPs that have been selected to control non-storm water pollution on the construction site. Implementation and locations of some non-storm water control BMPs are shown on the Water Pollution Control Drawings (WPCDs) in Attachment B. A narrative description of each BMP follows.

- NS-1, Water Conservation Practice- Refer to Attachment Q

- NS-2, Dewatering Operations- Refer to Attachment Q

- NS-3, Paving and Grinding Operations- See below

- NS-4, Temporary Stream Crossing- Refer to Attachment Q

- NS-5, Clearwater Diversion- Refer to Attachment Q

- NS-6, Illicit Connection/Illegal Discharge Detection and Reporting- See below
- NS-8, Vehicle and Equipment Cleaning-See below
- NS-9, Vehicle and Equipment Fueling-See below
- NS-10, Vehicle and Equipment Maintenance-See below
- NS-11, Pile Driving Operations- Refer to Attachment Q
- NS-12, Concrete Curing- Refer to Attachment Q
- NS-13, Concrete Finishing- Refer to Attachment Q
- NS-16, Temporary Batch Plant- Refer to Attachment Q

Illicit Connection/Illegal Discharge Detection and Reporting

- The Contractor will implement BMP NS-6, Illicit Connection/Illegal Discharge Detection and Reporting throughout the duration of the project.

Paving Operations

- The project will include AC pavement. Paving locations and adjacent storm drain inlets are shown on WPCDs 004. Paving operations will generally be conducted in January 2010 as shown on the project schedule in Section 300.4. BMP NS-3, Paving and Grinding Operations, will be implemented to prevent paving materials from being discharged off-site. Covers will be placed over each inlet adjacent to paving operations. The covers will consist of scrap carpeting placed over, and tucked under, each inlet grate. Following paving operations, the area will be swept, inlet covers will be removed, and the inlets will be inspected for paving materials.

Vehicle and Equipment Operations

- Several types of vehicles and equipment will be used on-site throughout the project, including graders, scrapers, excavators, loaders, paving equipment, rollers, trucks and trailers, backhoes, forklifts, generators, compressors, and traffic control equipment. BMPs NS-9, Vehicle and Equipment Fueling, and NS-10, Vehicle and Equipment Maintenance will be utilized to prevent discharges of fuel and other vehicle fluids. Except for concrete washout, which is addressed in Section 500.3.8, vehicle cleaning will not be performed on-site.

- A paved temporary fueling area will be constructed in the Contractor's yard as shown on WPCD-4. All self-propelled vehicles will be fueled off-site or at the temporary fueling area. Fuel trucks, each equipped with absorbent spill clean-up materials, will be used for all on-site fueling, whether at the temporary fueling area or for mobile fueling elsewhere on the site. Drip pans will be used for all mobile fueling. The fueling truck will be parked on the paved fueling area for overnight storage.

- Drip pans or absorbent pads will be used for all vehicle and equipment maintenance activities that involve grease, oil, solvents, or other vehicle fluids.

- All vehicle maintenance and mobile fueling operations will be conducted at least 50 feet away from operational inlets and drainage facilities and on a level graded area.

Concrete Saw-cutting

- Saw-cutting operations will not be conducted during or immediately prior to rainfall events.
- BMP WM-08, Concrete Waste Management, will be implemented to contain and dispose of saw-cutting slurries. The slurry will be vacuumed and discharged to the concrete washout facility described above. Dried and cured concrete wastes will be disposed off-site during concrete washout maintenance activities.

500.3.9 Waste Management and Materials Pollution Control

- Waste management consists of implementing procedural and structural BMPs for collecting, handling, storing and disposing of wastes generated by a construction project to prevent the release of waste materials into storm water discharges. Wastes are going to be generated during construction; however, the methods in which the wastes are collected, stored, and removed will determine the success of the waste management activities. Construction site wastes can range from residues collected from non-storm water discharges (i.e. paint removal) to general site litter and debris (i.e. empty marker paint cans).
- Materials pollution control (materials handling) consist of implementing procedural and structural BMPs for handling, storing and using construction materials to prevent the release of those materials into storm water discharges. The amount and type of construction materials to be utilized at the site will be dependent upon the type of construction and the length of the construction period. The materials may be used continuously, such as fuel for vehicles and equipment, or the materials may be used for a discrete period, such as fertilizer for landscaping.
- Waste management and materials pollution control BMPs shall be implemented to minimize storm water contact with construction materials, wastes and service areas, and to prevent materials and wastes from being discharged off-site. The primary mechanisms for storm water contact that shall be addressed are:
  - Direct contact with precipitation
  - Contact with storm water run-on and runoff
  - Wind dispersion of loose materials
  - Direct discharge to the storm drain system through spills or dumping

- Extended contact with some materials and wastes, such as asphalt cold mix and treated wood products can also leach pollutants into storm water.

An inventory of construction activities, materials, and wastes is provided in Section 5.3.1. The BMP Consideration Checklist in Attachment C and the following list indicates the BMPs that have been selected to handle materials and control construction site wastes. A narrative description of each BMP follows.

- WM-1, Material Delivery and Storage
- WM- 2, Material Use
- WM-3, Stockpile Management
- WM-4, Spill Prevention and Control
- WM-5, Solid Waste Management
- WM-6, Hazardous Waste Management
- WM-8, Concrete Waste Management
- WM-9, Sanitary/Septic Waste Management

- To prevent discharge of chemicals into the storm water system, all delivery, storage, and use of any such substances will be performed in temporary, bermed containment compounds.
- In general, BMPs WM-1 and WM-2 will be implemented to help prevent discharges of construction materials during delivery, storage, and use. The general material storage area will be located in the Contractor's yard as shown on WPCD-4. A sandbag barrier (BMP SE-8) will be provided around the storage area to prevent run-on from adjacent areas. Two types of storage/containment facilities will be provided within the storage area to minimize storm water contact with construction materials:

  - Watertight shipping containers will be used to store hand tools, small parts, and most construction materials that can be carried by hand, such as paint cans, solvents and grease.

  - A separate covered storage/containment facility will be constructed adjacent to the shipping containers to provide storage for larger items such as drums and items shipped or stored on pallets. The containment facility will consist of a raised concrete pad with 6 inch curbed sides. A wood frame and corrugated tin roof and sides will be constructed to protect the facility from sun and rain.

- Very large items, such as light standards, framing materials, and stockpiled lumber, will be stored in the open in the general storage area. Such materials will be elevated with wood blocks to minimize contact with run-on.

- Spill clean-up materials, material safety data sheets, a material inventory, and emergency contact numbers will be maintained and stored in the southern shipping container.

Stockpile Management

- BMPs WM-3, Stockpile Management, will be implemented to reduce or eliminate pollution of storm water from stockpiles of soil and paving materials such as Portland cement concrete (PCC) rubble, asphalt concrete (AC), asphalt concrete rubble, aggregate base, aggregate subbase, pre-mixed aggregate, and asphalt minder (so called "cold mix" asphalt). Stockpiles will be surrounded with sediment controls (SE-5, Fiber Rolls or SE-8, Sandbag Barrier). Plastic covers (EC-7, Geotextiles & Mats), or EC-5, Soil Binders, will be used.

Spill Prevention and Control

- BMP WM-4, Spill Prevention and Control, will be implemented to contain and clean-up spills and prevent material discharges to the storm drain system. Spill prevention is also discussed above in Material Delivery, Storage, and below in the following waste management and equipment maintenance sections.

Waste Management

- BMP WM-5, Solid Waste Management, and BMP WM-6, Hazardous Waste Management will be implemented to minimize storm water contact with waste materials and prevent waste discharges. Solid wastes will be loaded directly into trucks for off-site disposal. When on-site storage is necessary, solid wastes will be stored in watertight dumpsters in the general storage area of the Contractors yard. Dumpster locations will be shown on construction drawings. AC and PCC rubble will be stockpiled in the general storage area and will be surrounded with sediment controls (SE-8, Sandbag Barrier) and covered when necessary. Solid waste, including rubble stockpiles, will be removed and disposed off-site at least weekly. Hazardous wastes will be stored in the shipping containers or covered containment area discussed above for materials storage. Hazardous wastes will be appropriate and clearly marked containers and segregated from other non-waste materials.

Contaminated Soil Management

- If contaminated soils are encountered, SGPG will be notified, the contaminated soils will be contained, covered if stockpiled, and disposed of per WM-7, Contaminated Soil Management, and the contract documents. Employees will be instructed to recognize evidence of contaminated soil, such as buried debris, discolored soil, and unusual odors.

Concrete Residuals and Washout Wastes

- Discharges will consist of rinse water and residual concrete (Portland cement, aggregates, admixture, and water). Estimated pour dates are shown on the project schedule in Section 300.4. Concrete pours will not be conducted during or immediately prior to rainfall events.

- BMP WM-8, Concrete Waste Management, will be implemented and a below grade concrete washout facility will be constructed and maintained at the Contractor's yard will be shown on

construction drawings. All excess concrete and concrete washout slurries will be discharged to the washout facility for drying. BMP maintenance, waste disposal, and BMP removal will be conducted as described in WM-8. Dried-off concrete will be used as fill material if permitted by the Owner.

- Concrete waste solids/liquids will be removed and disposed of as required by WM-8.

Sanitary and Septic Wastes

- The Contractor will implement BMP WM-9, Sanitary and Septic Waste Management, and portable toilets will be located and maintained at the Contractor's yard for the duration of the project. Specific locations will be shown on construction drawings. Weekly maintenance will be provided and wastes will be disposed off-site. The toilets will be located away from concentrated flow paths and traffic flow.

500.3.10 Cost Breakdown for Water Pollution Control

A cost breakdown itemizing the contract lump sum for water pollution control has been developed for this project and included in Attachment O. The cost breakdown reflects the items of work, quantities and costs for BMPs shown in the CSWPPP, except for those construction site BMPs and permanent BMPs that are shown on the project plans and for which there is a contract item of work.

500.4 Water Pollution Control Drawings (WPCDs)

Site activities that cannot be located at this time but will be presented on the construction drawings are summarized as follows:

- ❑ Potential non-storm water discharges and activities, such as dewatering operations, concrete saw-cutting or coring, pressure washing, waterline flushing, diversions, cofferdams, and vehicle and equipment cleaning.
- ❑ The location designated for sampling the discharge(s) from areas of the construction site is shown on DWG.-003.
- ❑ Storage of soil or waste; construction material loading, unloading, storage and access areas; and areas designated for waste handling and disposal.
- ❑ Location(s) of temporary stockpiles and BMPs to protect those areas.
- ❑ BMPs for vehicle and equipment storage, fueling, maintenance, and cleaning.

The Water Pollution Control Drawings can be found in Attachment B of the CSWPPP.

500.5 Construction BMP Maintenance, Inspection, and Repair

- The purpose of storm water inspections is to evaluate BMP effectiveness and implement repairs or design changes as soon as feasible.

- Inspections shall be completed by the Contractor's CSWPPM.
- Inspections are recommended on a regular basis during dry weather. The purpose of dry-weather inspections is to ensure proper implementation of BMPs that are not necessarily weather-related. Examples include non-storm water, waste management, and sediment tracking control BMPs.
- Maintenance, inspection, and repair program is shown in Attachment G.
- A checklist is required during each inspection. A Storm Water Quality Construction Site Inspection Checklist is included as Attachment H. This checklist shall be used for all inspections unless the project's contract documents require the Contractor to use a different checklist.
- Inspections are required:
  - Prior to a forecast storm
  - After a rain event that causes runoff from the construction site
  - At 24-hour intervals during extended rain events
  - At any other time(s) or intervals of time specified in the contract documents.

Copies of the completed checklists will be kept with the SWPPP.

A tracking or follow-up procedure will follow any inspection that identifies deficiencies in BMPs.

Inspections will be conducted as follows:

A tracking or follow-up procedure shall follow any inspection that identifies deficiencies in BMPs. A program for Maintenance, Inspection and Repair of BMPs is shown in Attachment G.

500.6 Post-Construction Storm Water Management

500.6.1 Post-Construction Control Practices

The following are the post-construction BMPs that are to be used at this construction site after all construction is complete:

- Aggregate Surfacing
- A retaining wall is to be constructed to divert storm water run on around the power plant.
- Outlet protection/velocity dissipation device at culvert outlet-is composed of rock, grouted riprap, or concrete rubble, which is placed at the outlet of a pipe or a channel to prevent scour of the soil caused by concentrated, high velocity flows.
- Detention Basin

500.6.2 Operation/Maintenance after Project Completion

The post-construction BMPs that are described above will be funded and maintained by SGPG. The following list summarized operation and maintenance activities associated with long-term protection of the storm water control system:

- Remove any accumulated debris from catch basin, manhole, and culvert inlet.
- Replace aggregate surfacing if eroded.
- Repair energy dissipation outlet structure if needed.
- Remove sediment from detention basin
- Remove sediment from traps in manholes and catch basins
- Visually inspect storm sewers annually and remove accumulated sediment and debris.

500.7 Training

- Individuals responsible for CSWPPP implementation, and permit compliance are required to be trained, and the CSWPPP shall document all training. This includes those personnel responsible for installation, inspection, maintenance, and repair of BMPs. Describe the types of training that the Contractor's inspection, maintenance, and repair personnel have received or will receive that are directly related to storm water pollution prevention.
- Subcontractors and employees whose activities may generate non-storm water discharges shall be trained to minimize the potential for such discharges.
- Training may be both formal and informal
- Formal storm water pollution prevention or erosion and sediment control training sessions may include certification as a Certified Professional in Erosion Control and Sediment Control (CPESC); workshops offered by the SWRCB, RWQCB, Community College or University of California Extension, or other locally recognized agencies or professional organizations such as the International Erosion Control Association (IECA), California Storm water Quality Association (CASQA), Association of Bay Area Governments (ABAG), Association of General Contractors (AGC), etc. Owners and Contractors are encouraged to contact the RWQCB or the SWRCB to inquire about availability of training.
- A listing of training organizations, subject matter and classes are located at http://www.dot.ca.gov/hq/construc/stormwater.html
- The Storm Water Pollution Prevention Manager (SWPPM) should have a minimum of 24 hours (3 days) of formal storm water pollution prevention training.
- On-site storm water pollution prevention training shall be conducted on an on-going basis.

- ❑ Document formal and informal storm water training using the sample Trained Contractor Personnel Log sheet provided as Attachment I.
- ❑ Formal storm water training may be documented by providing a list of classes and copies of class completion documents.

Section 300.5 shows the name of the Contractor's Storm Water Pollution Prevention Manager (SWPPM). This person has received the following training:

PENDING

On-going, formal training sessions will be selected from one of the following organizations:

- City of Los Angeles Storm Water Program
- County of Los Angeles Storm Water Program
- State of California Regional Water Quality Control Board
- IECA, ABAG and/or AGC sponsored training
- USEPA sponsored training
- Recognized municipal stakeholder organizations throughout California
- Professional organizations and societies in the building and construction field

Other Contractor personnel attending tailgate training will document attendance using the form in Attachment I. Informal training will include tailgate site briefings to be conducted bi-weekly and will address the following topics:

- Erosion Control BMPs
- Sediment Control BMPs
- Non-Storm Water BMPs
- Waste Management and Materials Pollution Control BMPs
- Emergency Procedures specific to the construction site storm water management

This SWPPP was prepared by Sargent and Lundy LLC, under the direction of Mr. , a registered Professional Engineer in the State of California.
Section 300.5 shows the name of the Contractor's Storm Water Pollution Prevention Manager (SWPPM). This person has received the following training:

- Information to be provided by owner

The training log showing formal and informal training of various Contractor personnel is shown in Attachment I.
.

500.8 List of Subcontractors

All contractors and subcontractors will be notified of the requirement for storm water management measures during the project. A list of contractors will be maintained and included in the SWPPP. If

subcontractors change during the project, the list will be updated accordingly. The subcontractor notification letter and log is included in the CSWPPP as Attachment J.

500.9 Other Plans/Permits

Following is a list of the plans and permits included in Attachment N of this SWPPP.

- State Water Resources Control Board (SWRCB) Resolution No. 99-08-DWQ, National Pollutant Discharge Elimination System (NPDES) General Permit No. CAS000002, Waste Discharge Requirements (WDRs) for Discharges of Storm Water Runoff Associated with Construction Activity, August 1999, and amendments.

- Clean Water Act Section 401 Water Quality Certification issued by the State of California as processed through the RWQCB

- U.S. Army Corps of Engineers Clean Water Act Section 404 Nationwide Permit

Monitoring Program and Reports

600.1 Site Inspections

The CSWPPM will inspect the site prior to a forecast storm, after a rain event that causes runoff from the construction site, at 24-hour intervals during extended rain events, and as specified in the contract documents. The results of all inspections and assessments will be documented. Copies of the completed inspection checklists will be maintained with the CSWPPP. Site inspections conducted for monitoring purposes will be performed using the inspection checklist shown in Attachment H.

- BMPs will be evaluated for adequacy, proper implementation, and whether additional BMPs are required in accordance with the terms of the Permits and the contract documents.
- Implementation of non-storm water discharge BMPs will be verified and their effectiveness evaluated.
- One-time discharges of non-storm water will be inspected when such discharges occur.
- The results of the inspections and assessments will be recorded on the Storm Water Quality Construction Site Inspection Checklist included in Attachment H. This checklist will be used for all inspections.
- A copy of each completed Storm Water Quality Construction Site Inspection Checklist will be included in the on-site CSWPPP. A tracking or follow-up procedure will follow any inspection that identifies deficiencies in BMPs.

The name(s) and contact number(s) of the assigned inspection personnel are listed below:

Assigned inspector: (To be assigned) Contact phone: (To be assigned)

600.2 Non-Compliance Reporting

If a discharge occurs or if the project receives a written notice of non-compliance, the Contractor will immediately notify the Owner and will file a written report to the Owner within 7 days of the discharge or notice. The Owner is responsible for filing a written report to the Regional Water Quality Control Board (RWQCB) within 30 days or identification of non-compliance. Corrective measures will be implemented immediately following the discharge, notice or order. A sample Notice of Non-Compliance (NONC) form is provided in Attachment K. All discharges will be documented on a Discharge Reporting Log using the example form in Attachment T.

The report to the Owner and to the RWQCB will contain the following items:

- The date, time, location, nature of operation, and type of unauthorized discharge, including the cause or nature of the notice or order,

- The control measures (BMPs) deployed before the discharge event, or prior to receiving notice or order,
- The date of deployment and type of control measures (BMPs) deployed after the discharge event, or after receiving the notice or order, including additional measures installed or planned to reduce or prevent re-occurrence, and
- An implementation and maintenance schedule for any affected BMPs

600.3 Record Keeping and Reports

Records shall be retained for a minimum of three years for the following items:

- Site inspections
- Compliance certifications
- Discharge reports
- Approved SWPPP document and amendments

600.4 Sampling and Analysis Plan for Sediment

This project does not have the potential to discharge directly to a water body listed as impaired due to Sedimentation/Siltation and/or Turbidity pursuant to Clean Water Act, Section 303(d). This section is not applicable because Day Creek is not on the list of impaired water bodies.

600.5 Sampling and Analysis Plan for Non-Visible Pollutants

This Sampling and Analysis Plan (SAP) for Non-Visible Pollutants describes the sampling and analysis strategy and schedule for monitoring non-visible pollutants in storm water discharges from the project site and off-site activities directly related to the project, in accordance with the requirements of Section B of the General Permit, including SWRCB Resolution 2001-046.

600.5.1 Scope of Monitoring Activities

The following construction materials, wastes or activities, as identified in Section 500.3.1, are potential sources of non-visible pollutants to storm water discharges from the project. Storage, use, and operational locations are shown on the WPCDs in Attachment B.

- Materials and storage locations will be identified when the contractor advises laydown containment strategy.

The following existing site features, as identified in Section 500.3.3, are potential sources of non-visible pollutants to storm water discharges from the project. Locations of existing site features contaminated with non-visible pollutants are shown on the WPCDs in Attachment B.

- Potential sources and locations of non-visible pollutants will be identified when the contractor advises laydown containment strategy.

The following soil amendments have the potential to change the chemical properties, engineering properties, or erosion resistance of the soil and will be used on the project site. Locations of soil amendment application are shown on the WPCDs in Attachment B.

- None anticipated

The project has no potential to receive storm water run-on because there is no run-on from north of the site. The edge of property is a railroad and the centerline highpoint of the existing topography diverts the flow around the site. This is shown on the WPCDs in Attachment B.

Sampling for non-visible pollutants will be conducted when (1) a breach, leakage, malfunction, or spill is observed; and (2) the leak or spill has not been cleaned up prior to the rain event; and (3) there is the potential for discharge of non-visible pollutants to surface waters or drainage system.

600.5.2 Monitoring Strategy

Sampling Schedule

Sampling locations on this site are at one detention basin outlet and at upstream/downstream locations associated with the western parking/laydown area identified on the WPCD's. Samples for the applicable non-visible pollutant(s) and a sufficiently large uncontaminated background sample shall be collected during the first two hours of discharge from rain events that result in a sufficient discharge for sample collection. Samples shall be collected during daylight hours (sunrise to sunset) and shall be collected regardless of the time of year, status of the construction site, or day of the week.

In conformance with the U.S. Environmental Protection Agency definition, a minimum of 72 hours of dry weather will be used to distinguish between separate rain events.

Collection of discharge samples for non-visible pollutant monitoring will be triggered when any of the following conditions are observed during the required inspections conducted before or during rain events:

- Materials or wastes containing potential non-visible pollutants are not stored under watertight conditions. Watertight conditions are defined as (1) storage in a watertight container, (2) storage under a watertight roof or within a building, or (3) protected by temporary cover and containment that prevents storm water contact and runoff from the storage area.
- Materials or wastes containing potential non-visible pollutants are stored under watertight conditions, but (1) a breach, malfunction, leakage, or spill is observed, (2) the leak or spill is not cleaned up prior

to the rain event, and (3) there is the potential for discharge of non-visible pollutants to surface waters or a storm sewer system.

- An operational activity, including but not limited to those in Section 600.5.1, with the potential to contribute non-visible pollutants (1) was occurring during or within 24 hours prior to the rain event, (2) applicable BMPs were observed to be breached, malfunctioning, or improperly implemented, and (3) there is the potential for discharge of non-visible pollutants to surface waters or a storm sewer system.

- Storm water runoff from an area contaminated by historical usage of the site has been observed to combine with storm water runoff from the site, and there is the potential for discharge of non-visible pollutants to surface waters or a storm sewer system.

Sampling Locations

(Phase I and II environmental assessments will be needed in order to respond to some of the following questions.) Sampling locations are based on proximity to planned non-visible pollutant storage, occurrence or use; accessibility for sampling, personnel safety; and other factors in accordance with the applicable requirements in the Permit. Planned sampling locations are shown on the WPCDs in Attachment B and include the following:

- Two sampling locations have been identified for the collection of samples of runoff that drain areas where construction activities have the potential to have non-visible pollutants.

- Sample location number 1 is located southern culvert outlet of western parking area. Sample two location is downstream of site in Chadwick Creek. (pending Phase I & II environmental assessment)

- [Enter number of locations] sampling locations have been identified for the collection of samples of runoff that drain areas contaminated by historical usage of the site.

- If applicable sample location number(s) is located .

- Two sampling locations have been identified for the collection of samples of run-on to the project site with the potential to combine with discharges being sampled for non-visible pollutants. These samples are intended to identify sources of potential non-visible pollutants that originate off the project site.

- Sample location number 1 is located north of the western parking area in a dry-run drainage ditch. Sample location two is located upstream of the plant in Chadwick Creek.

If an operational activity or storm water inspection conducted 24 hours prior to or during a rain event identifies the presence of a material storage, waste storage, or operations area with spills or the potential for the discharge of non-visible pollutants to surface waters or a storm sewer system that was an unplanned location and has not been identified on the WPCDs, sampling locations will be selected using the same rationale as that used to identify planned locations.

600.5.3 Monitoring Preparation

Samples on the project site will be collected by the following Contractor sampling personnel:

Name/Telephone Number:	Information to be provided by owner
Name/Telephone Number:	
Alternate(s)/Telephone Number:	
Alternate(s)/Telephone Number:	

Prior to the rainy season, all sampling personnel and alternates will review the SAP. Qualifications of designated Contractor personnel describing environmental sampling training and experience are provided in Attachment I.

An adequate stock of monitoring supplies and equipment for monitoring non-visible pollutants will be available on the project site prior to a sampling event. Monitoring supplies and equipment will be stored in a cool-temperature environment that will not come into contact with rain or direct sunlight. Sampling personnel will be available to collect samples in accordance with the sampling schedule.

Supplies maintained at the project site will include, but are not limited to, surgical gloves, sample collection equipment, coolers, appropriate number and volume of sample bottles, identification labels, re-sealable storage bags, paper towels, personal rain gear, ice, Sampling Activity Log forms, and Chain of Custody (COC) forms. The Contractor will obtain and maintain the field-testing instruments, as identified in Section 600.5.6, for analyzing samples in the field by Contractor sampling personnel.

Safety practices for sample collection will be in accordance with the [ENTER TITLE AND PUBLICATION DATE OF CONTRACTOR'S HEALTH AND SAFETY PLAN FOR THE PROJECT OR PROVIDE SPECIFIC REQUIREMENTS HEREIN].

600.5.4 Analytical Constituents

Identification of Non-Visible Pollutants

Table 600-2 lists the specific sources and types of potential non-visible pollutants on the project site and the applicable water quality indicator constituent(s) for that pollutant.

Table 600-2

Potential Non-Visible Pollutants and Water Quality Indicator Constituents

Pollutant Source	Pollutant	Water Quality Indicator Constituent
To be provided by owner		

600.5.5 Sample Collection and Handling

Sample Collection Procedures

Samples of discharge will be collected at the designated sampling locations shown on the WPCDs for observed breaches, malfunctions, leakages, spills, operational areas, soil amendment application areas, and historical site usage areas that triggered the sampling event.

Grab samples will be collected and preserved in accordance with the methods identified in the Table 600-3, "Sample Collection, Preservation and Analysis for Monitoring Non-Visible Pollutants," provided in Section 600.5.6. Only personnel trained in proper water quality sampling will collect samples.

Samples will be collected by placing a separate lab-provided sample container directly into a stream of water downgradient and within close proximity to the potential non-visible pollutant discharge location. This separate lab-provided sample container will be used to collect water, which will be transferred to sample bottles for laboratory analysis. The upgradient and uncontaminated background samples shall be collected first prior to collecting the downgradient to minimize cross-contamination. The sampling personnel will collect the water upgradient of where they are standing. Once the separate lab-provided sample container is filled, the water sample will be poured directly into sample bottles provided by the laboratory for the analyte(s) being monitored.

To maintain sample integrity and prevent cross-contamination, sampling collection personnel will:

- Wear a clean pair of surgical gloves prior to the collection and handling of each sample at each location.
- Not contaminate the inside of the sample bottle by not allowing it to come into contact with any material other than the water sample.

- Discard sample bottles or sample lids that have been dropped onto the ground prior to sample collection.
- Not leave the cooler lid open for an extended period of time once samples are placed inside.
- Not sample near a running vehicle where exhaust fumes may impact the sample.
- Not touch the exposed end of a sampling tube, if applicable.
- Avoid allowing rainwater to drip from rain gear or other surfaces into sample bottles.
- Not eat, smoke, or drink during sample collection.
- Not sneeze or cough in the direction of an open sample bottle.
- Minimize the exposure of the samples to direct sunlight, as sunlight may cause biochemical transformation of the sample to take place.
- Decontaminate sampling equipment prior to sample collection using a TSP-soapy water wash, distilled water rinse, and final rinse with distilled water.
- Dispose of decontamination water/soaps appropriately; i.e., not discharge to the storm drain system or receiving water.

Sample Handling Procedures

Immediately following collection, sample bottles for laboratory analytical testing will be capped, labeled, documented on a Chain of Custody form provided by the analytical laboratory, sealed in a re-sealable storage bag, placed in an ice-chilled cooler, at as near to 4 degrees Celsius as practicable, and delivered within 24 hours to the following California state-certified laboratory:

Laboratory Name: Owner will provide

Address:

Telephone Number:

Point of Contact:

Immediately following collection, samples for field analysis will be tested in accordance with the field instrument manufacturer's instructions and results recorded on the Sampling Activity Log.

Sample Documentation Procedures

All original data documented on sample bottle identification labels, Chain of Custody forms, Sampling Activity Logs, and Inspection Checklists will be recorded using waterproof ink. These will be

considered accountable documents. If an error is made on an accountable document, the individual will make corrections by lining through the error and entering the correct information. The erroneous information will not be obliterated. All corrections will be initialed and dated. Copies of the Sampling Activity Log and Chain of Custody form are provided in Attachment R.

Sampling and field analysis activities will be documented using the following:

- Sample Bottle Identification Labels: Sampling personnel will attach an identification label to each sample bottle. At a minimum, the following information will be recorded on the label, as appropriate:

  - San Gabriel Generating Station Project
  - Project number
  - Unique sample identification number and location.
    [Project Number]-[Six digit sample collection date]-[Location]
    (*Example:* 0G5304-081801-Inlet472).
    Quality assurance/quality control (QA/QC) samples shall be identified similarly using a unique sample number or designation
    (*Example:* 0G5304-081801-DUP1).
    - Collection date/time (No time applied to QA/QC samples
    - Analysis constituent

- Sampling Activity Logs: A log of sampling events will identify:

  - Sampling date
  - Separate times for collected samples and QA/QC samples recorded to the nearest minute
  - Unique sample identification number and location
  - Analysis constituent
  - Names of sampling personnel
  - Weather conditions (including precipitation amount)
  - Field analysis results
  - Other pertinent data

- Chain of Custody (COC) forms: All samples to be analyzed by a laboratory will be accompanied by a COC form provided by the laboratory. Only the sample collectors will sign the COC form over to the lab. COC procedures will be strictly adhered to for QA/QC purposes.

- Storm Water Quality Construction Inspection Checklists: When applicable, the Contractor's storm water inspector will document on the checklist that samples for non-visible pollutants were taken during a rain event.

600.5.6 Sample Analysis

Samples will be analyzed for the applicable constituents using the analytical methods identified in Table 600-3, "Sample Collection, Preservation and Analysis for Monitoring Non-Visible Pollutants" in this section.

Table 600-3 (owner to verify)
Sample Collection, Preservation and Analysis for Monitoring Non-Visible Pollutants

Constituent	Analytical Method	Minimum Sample Volume	Sample Bottle	Sample Preservation	Reporting Limit	Maximum Holding Time
VOCs-Solvents	EPA 8260B	3 x 40 mL	VOA-glass	Store at 4° C, HCl to pH < 2	1 µg/L	14 days
SVOCs	EPA 8270C	1 x 1	Glass-Amber	Store at 4° C	10 µg/L	7 days
PH	EPA 150.1	1 x 100 mL	Polypropylene	None	Unit less	Immediate
Metals (Al, Sb, As, Ba, Be, Cd, Ca, Cr, Co, Cu, Fe, Pb, Mg, Mn, Mo, Ni, Se, Na, Th, Va, Zn)	EPA 6010B/7470A	1 x 250 mL	Polypropylene	Store at 4˚ C, HNO_3 to pH<2	0.1 mg/L	6 months

Notes:
VOC-volatile organic compound
SVOC-Semi volatile organic compound
°C – Degrees Celsius
µg/L – micrograms per Liter

For samples collected for field analysis, collection, analysis and equipment calibration will be in accordance with the field instrument manufacturer's specifications.

The following field instrument(s) will be used to analyze the following constituents:

Field Instrument	Constituent

- The instrument(s) will be maintained in accordance with manufacturer's instructions.
- The instrument(s) will be calibrated before each sampling and analysis event.
- Maintenance and calibration records will be maintained with the SWPPP.

600.5. 7 Quality Assurance/Quality Control

For an initial verification of laboratory or field analysis, duplicate samples will be collected at a rate of 10 percent or 1 duplicate per sampling event. The duplicate sample will be collected, handled, and analyzed using the same protocols as primary samples. A duplicate sample will be collected at each location immediately after the primary sample has been collected. Duplicates will be collected where contamination is likely, not on the background sample. Duplicate samples will not influence any evaluations or conclusions; however, they will be used as a check on laboratory quality assurance.

600.5.8 Data Management and Reporting

A copy of all water quality analytical results and QA/QC data will be included in the on-site SWPPP within 5 days of sampling (for field analyses) and within 30 days (for laboratory analyses).

Lab reports and COCs will be reviewed for consistency between lab methods, sample identifications, dates, and times for both primary samples and QA/QC samples. All data, including COC forms and Sampling Activity Logs, shall be kept with the SWPPP.

600.5.9 Data Evaluation

An evaluation of the water quality sample analytical results, including figures with sample locations, the water quality analytical results, and the QA/QC data, will be included in the on-site SWPPP.

Should the runoff/down gradient sample show an increased level of the tested analytic relative to the background sample, the BMPs, site conditions, and surrounding influences will be assessed to determine the probable cause for the increase. As determined by the site and data evaluation,

appropriate BMPs will be repaired or modified to mitigate discharges of non-visual pollutant concentrations. Any revisions to the BMPs will be recorded as an amendment to the SWPPP.

600.5.10 Change of Conditions

Whenever SWPPP monitoring, pursuant to Section B of the General Permit, indicates a change in site conditions that might affect the appropriateness of sampling locations or introduce additional non-visible pollutants of concern, testing protocols will be revised accordingly. All such revisions will be recorded as amendments to the SWPPP.

Attachment A

Vicinity Map
Drawing SWPPP-001

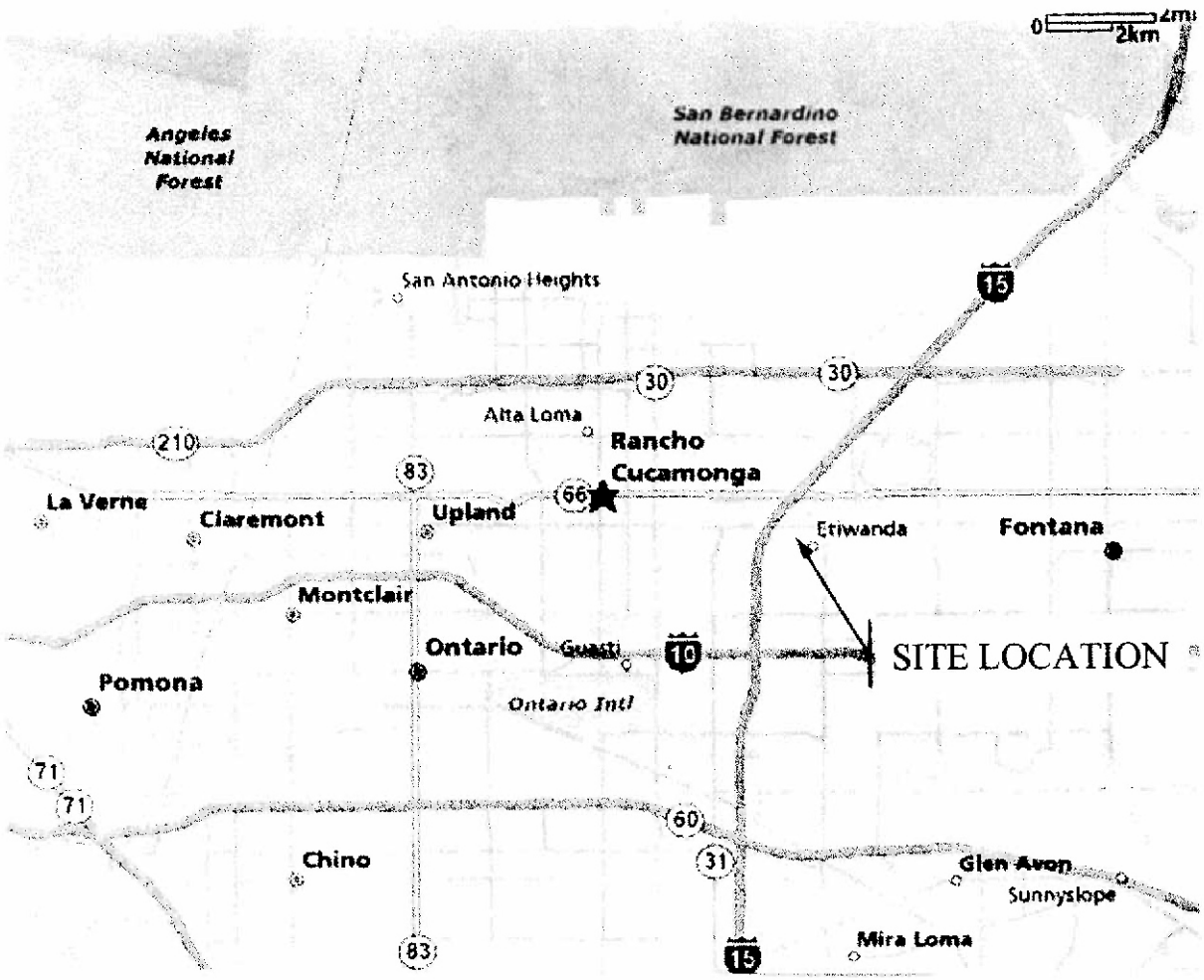

DRAWING RELEASE RECORD						
REV.	DATE REL'D	PREPARED	REVIEWED	APPROVED	PURPOSE	FILM
0	03/23/2007	DJD	DJD		CLIENT REVIEW	

SCALE: NONE

PROJECT NUMBER: 11962 003

VICINITY MAP

COMBINED CYCLE PLANT
San Gabriel Generating Station
San Gabriel Power Generation, LLC
Rancho Cucamonga, California

Sargent & Lundy

ATTACHMENT NO.: A

REV.: 0

SHEET 1 OF 1

4/10/07 vsa ..\Reliant Etiwanda\Graphics\Appx H\Attachment A_edit.cdr

Attachment B

Water Pollution Control Drawings (WPCDs)

Drawing List

CSWPPP-002 Site Runoff Patterns-Pre-Construction Conditions (Figure 3-5-1B)
CSWPPP-003 Site Runoff Patterns-During Construction
CSWPPP-004 Site Runoff Patterns-Post-Development
CSWPPP-005 Construction Access Road, Parking and Laydown Area (CSK022)
CSWPPP-006 Conceptual Design-Plant Access Road
CSWPPP-007 Conceptual Design, Sedimentation/Detention Basin (Figure 3-5-5C)
CSWPPP-008 Erosion/Sediment Control Details Sheet 1 of 2
CSWPPP-009 Erosion/Sediment Control Details Sheet 2 of 2

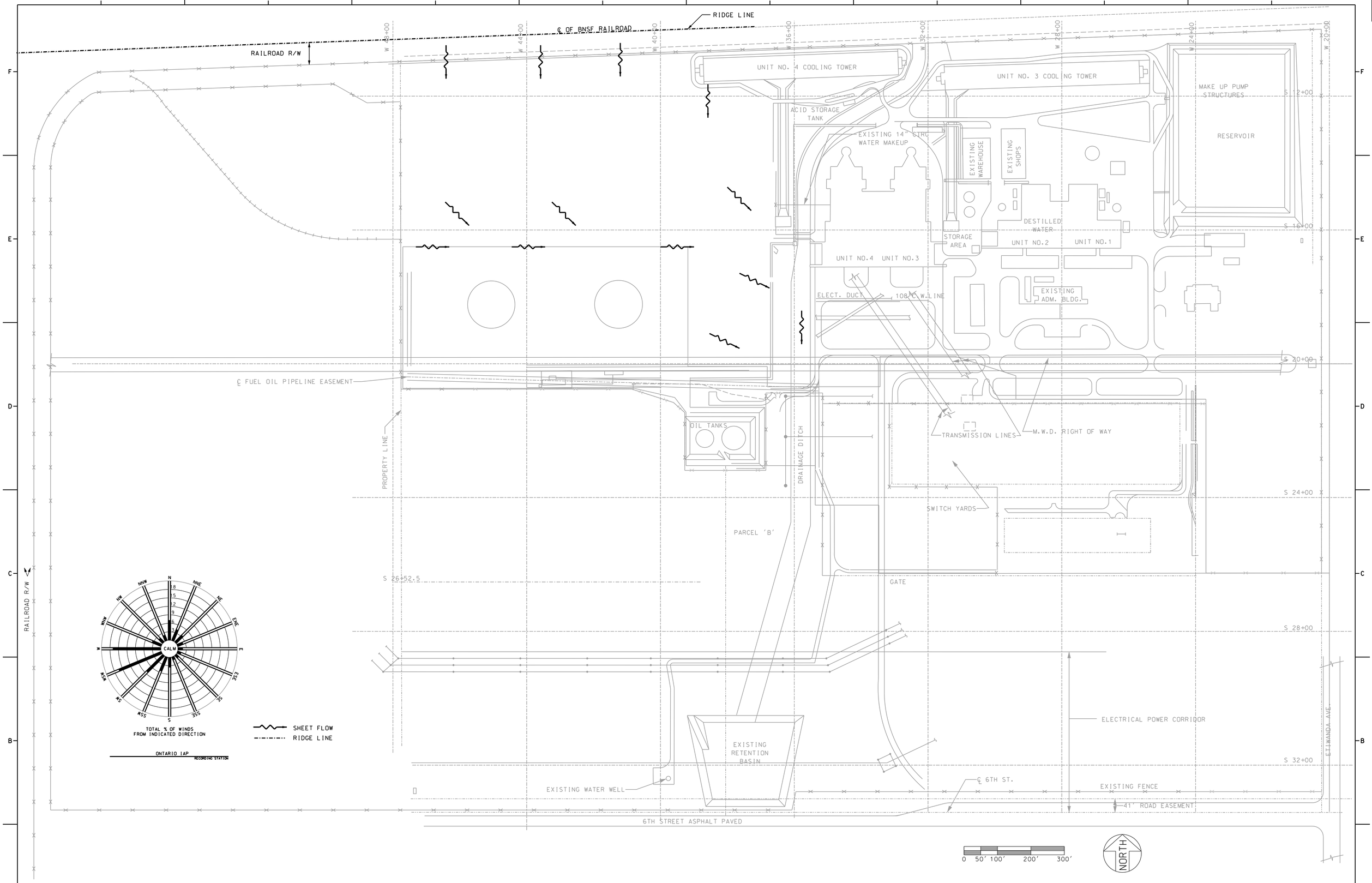

DRAWING RELEASE RECORD						DRAWING RELEASE RECORD					
REV.	DATE REL'D.	PREPARED	REVIEWED	APPROVED	PURPOSE	REV.	DATE REL'D.	PREPARED	REVIEWED	APPROVED	PURPOSE

SCALE: 1"=100'

PROJECT NUMBER

PRE-CONSTRUCTION RUNOFF AND DRAINAGE PATTERN PLAN
COOLING TOWER DEMOLISHED

ETIWANDA PROJECT
RELIANT ENERGY
SAN BERNARDINO, CALIFORNIA

Sargent & Lundy LLC

DRAWING NO.: FIGURE 3.5-1B

REV.: 0

SHEET OF

REV. 4/17/2004

Z:D2108/028307/dt:M028307#2-PROJECTS#Etiwanda#Q31207#figure3-5-1B.dgn
3/13/2007 2:42:18 PM

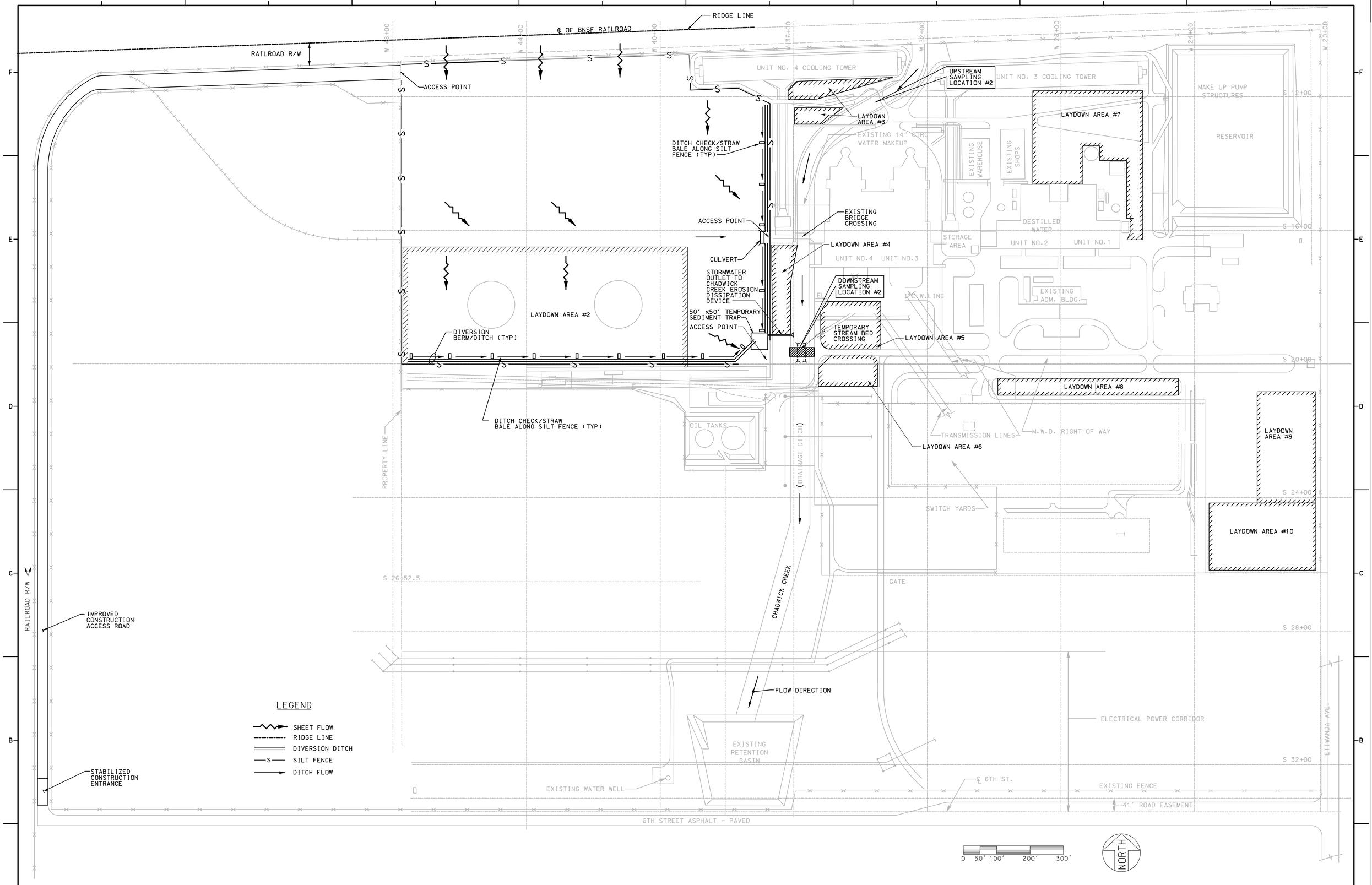

DRAWING RELEASE RECORD					
REV.	DATE REL'D.	PREPARED	REVIEWED	APPROVED	PURPOSE

DRAWING RELEASE RECORD					
REV.	DATE REL'D.	PREPARED	REVIEWED	APPROVED	PURPOSE
0	03-28-2007	NM/ALS	R. CHACKANAD	D. DAHLBERG	CLIENT REVIEW

SCALE: 1"=100'

PROJECT NUMBER: 11962-003

SITE RUNOFF PATTERNS

DURING CONSTRUCTION
COMBINED CYCLE PLANT
ETIWANDA PROJECT
RELIANT ENERGY
SAN BERNARDINO, CALIFORNIA

Sargent & Lundy LLC

DRAWING NO. CSEPPP-003 REV. 0

SHEET OF

Z02748/0n5439/dis@0n5439@Civil Projects@Etiwanda@cswppp-003.dgn
3/27/2007 4:22:44 PM

REV. 4/17/2004

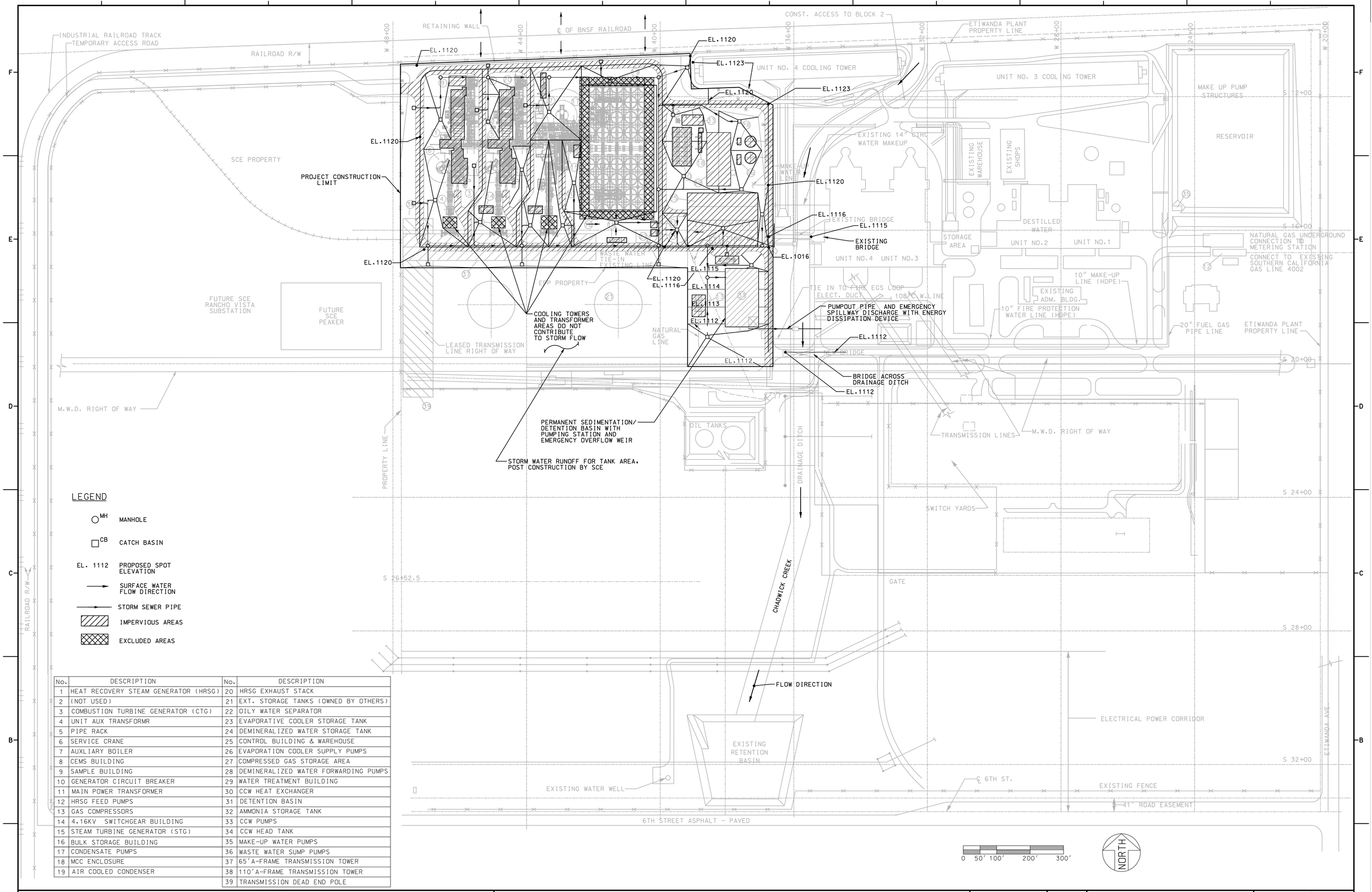

LEGEND

- MH — MANHOLE
- CB — CATCH BASIN
- EL. 1112 — PROPOSED SPOT ELEVATION
- SURFACE WATER FLOW DIRECTION
- STORM SEWER PIPE
- IMPERVIOUS AREAS
- EXCLUDED AREAS

No.	DESCRIPTION	No.	DESCRIPTION
1	HEAT RECOVERY STEAM GENERATOR (HRSG)	20	HRSG EXHAUST STACK
2	(NOT USED)	21	EXT. STORAGE TANKS (OWNED BY OTHERS)
3	COMBUSTION TURBINE GENERATOR (CTG)	22	OILY WATER SEPARATOR
4	UNIT AUX TRANSFORMR	23	EVAPORATIVE COOLER STORAGE TANK
5	PIPE RACK	24	DEMINERALIZED WATER STORAGE TANK
6	SERVICE CRANE	25	CONTROL BUILDING & WAREHOUSE
7	AUXLIARY BOILER	26	EVAPORATION COOLER SUPPLY PUMPS
8	CEMS BUILDING	27	COMPRESSED GAS STORAGE AREA
9	SAMPLE BUILDING	28	DEMINERALIZED WATER FORWARDING PUMPS
10	GENERATOR CIRCUIT BREAKER	29	WATER TREATMENT BUILDING
11	MAIN POWER TRANSFORMER	30	CCW HEAT EXCHANGER
12	HRSG FEED PUMPS	31	DETENTION BASIN
13	GAS COMPRESSORS	32	AMMONIA STORAGE TANK
14	4.16KV SWITCHGEAR BUILDING	33	CCW PUMPS
15	STEAM TURBINE GENERATOR (STG)	34	CCW HEAD TANK
16	BULK STORAGE BUILDING	35	MAKE-UP WATER PUMPS
17	CONDENSATE PUMPS	36	WASTE WATER SUMP PUMPS
18	MCC ENCLOSURE	37	65'A-FRAME TRANSMISSION TOWER
19	AIR COOLED CONDENSER	38	110'A-FRAME TRANSMISSION TOWER
		39	TRANSMISSION DEAD END POLE

DRAWING RELEASE RECORD

REV.	DATE REL'D.	PREPARED	REVIEWED	APPROVED	PURPOSE

DRAWING RELEASE RECORD

REV.	DATE REL'D.	PREPARED	REVIEWED	APPROVED	PURPOSE
0	03/28/2007	NM/ALS	R. CHACKANAD	D. DAHLBERG	CLIENT REVIEW

SCALE: 1"=100'

PROJECT NUMBER: 11962-003

SITE RUNOFF PATTERNS POST DEVELOPMENT

COMBINED CYCLE PLANT ETIWANDA PROJECT RELIANT ENERGY SAN BERNARDINO, CALIFORNIA

Sargent & Lundy LLC

DRAWING NO. CSWPPP-004 REV. 0

SHEET OF

REV. 4/17/2004

Z:\0274B\0n5439\Civil Projects\Etiwanda\cswppp-004.dgn 3/27/2007 2:01:42 PM

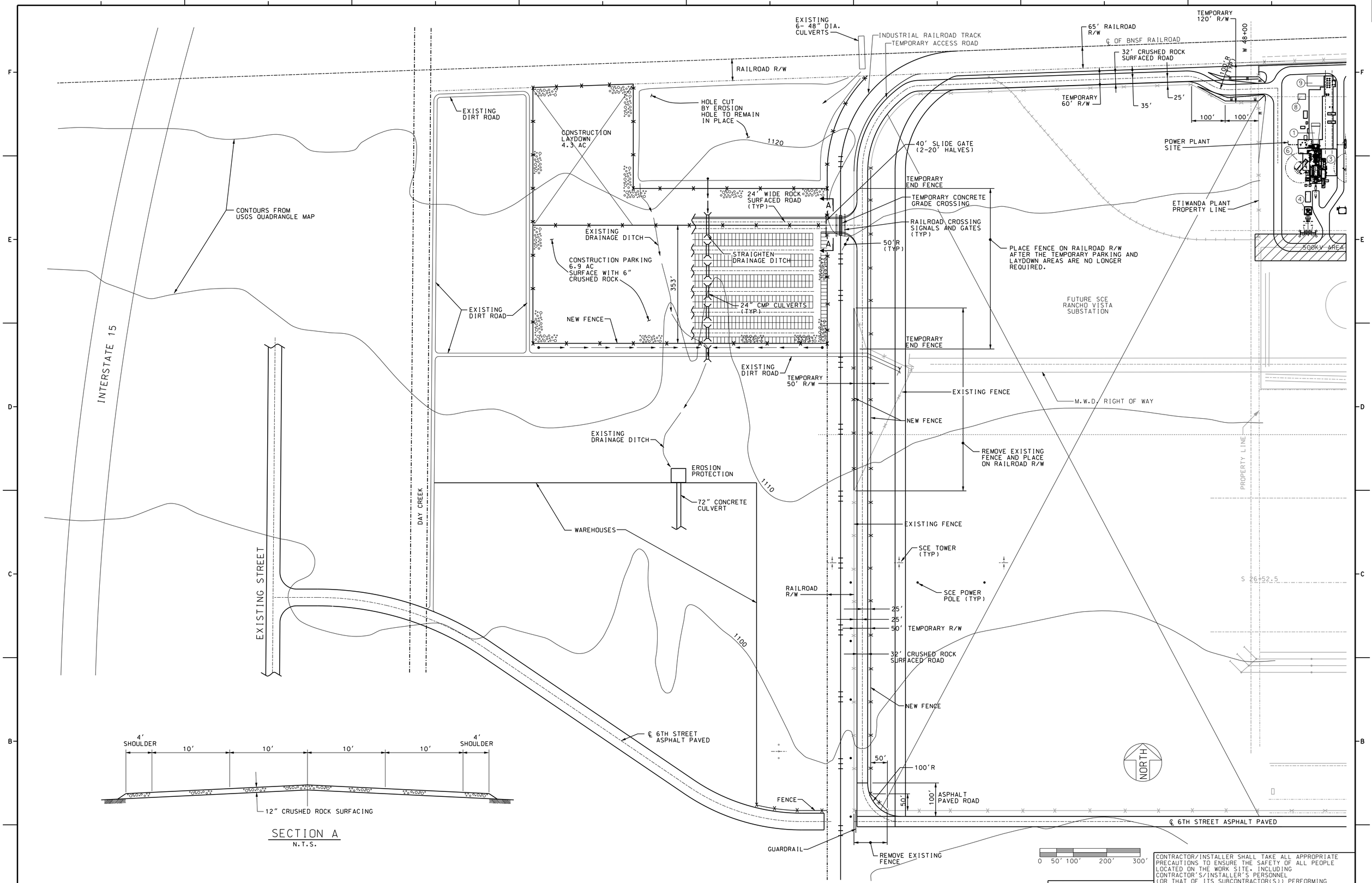

FILENAME:csk022.dgn

CONTRACTOR/INSTALLER SHALL TAKE ALL APPROPRIATE PRECAUTIONS TO ENSURE THE SAFETY OF ALL PEOPLE LOCATED ON THE WORK SITE, INCLUDING CONTRACTOR'S/INSTALLER'S PERSONNEL (OR THAT OF ITS SUBCONTRACTOR(S)) PERFORMING THE WORK.

DRAWING RELEASE RECORD

REV.	DATE REL'D.	PREPARED	REVIEWED	APPROVED	PURPOSE

DRAWING RELEASE RECORD

REV.	DATE REL'D.	PREPARED	REVIEWED	APPROVED	PURPOSE
0	02-19-2007	A. SLACH	R. COOK		ISSUED FOR COMMENT
1	02-22-2007	A. SLACH	R. COOK		ISSUED FOR COMMENT - REVISED SURFACING FOR FIRST 100' OF THE ACCESS ROAD
2	04-02-2007	A. SLACH	R. COOK		ISSUED FOR COMMENT - REVISED ENTRANCE TO LAYDOWN AREAS AND REVISED GRADE CROSSING

SCALE: 1"=100'

PROJECT NUMBER: 11962-003

ALTERNATE B GRADING, DRAINAGE AND SURFACING

ETIWANDA PROJECT
RELIANT ENERGY
SAN BERNARDINO, CALIFORNIA

Sargent & Lundy LLC

DRAWING NO. CSK-022

REV. 2

SHEET OF

Z:\2108/028307/01\#028307#2-PROJECTS\Etiwanda\Combined Cycle\CSK022.dgn
4/2/2007 11:17:22 AM

REV. 417/1/2004

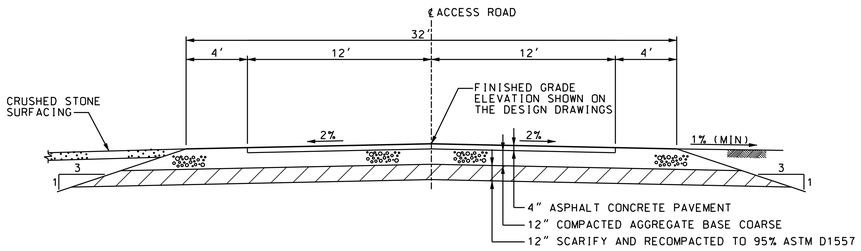

PLANT ACCESS ROAD

NTS

DRAWING RELEASE RECORD

REV.	DATE REL'D.	PREPARED	REVIEWED	APPROVED	PURPOSE

DRAWING RELEASE RECORD

REV.	DATE REL'D.	PREPARED	REVIEWED	APPROVED	PURPOSE
0	03-28-2007	A.SLACH	R.CHACKANAD	D.DAHLBERG	CLIENT REVIEW

SCALE: NONE

PROJECT NUMBER: 11962-003

CONCEPTUAL DESIGN
PLANT ACCESS ROAD

COMBINED CYCLE PLANT
ETIWANDA PROJECT
RELIANT ENERGY
SAN BERNARDINO, CALIFORNIA

Sargent & Lundy LLC

DRAWING NO.: CSWPPP-006

REV.: 0

SHEET OF

REV. 417/1/2004

D2108/028307/d1=#028307#2-PROJECTS#Etiwanda#Combined Cycle#cswppp-006.dgn
3/27/2007 10:56:39 AM

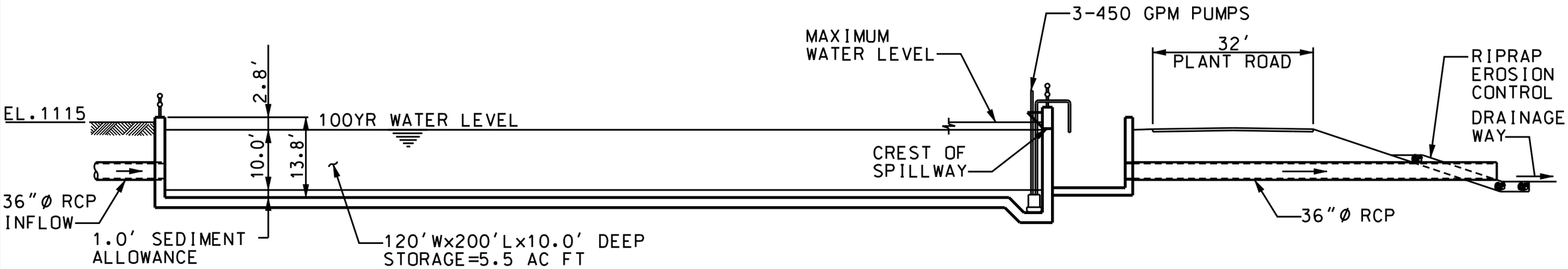

NOTE: INLET PIPE IS TURNED FOR CLARITY.
OUTLET PIPE AND PLANT ROAD ARE TURNED FOR CLARITY.

Sargent & Lundy LLC

CONCEPTUAL DESIGN
SEDIMENTATION/DETENTION BASIN
COMBINED CYCLE PLANT
ETIWANDA PROJECT
RELIANT ENERGY
SAN BERNARDINO, CALIFORNIA

PREPARED	REVIEWED	APPROVED
A.PAAPE	R.COOK	———
DATE: XX-XX-2007	SCALE: NONE	FIGURE 3.5-5 C

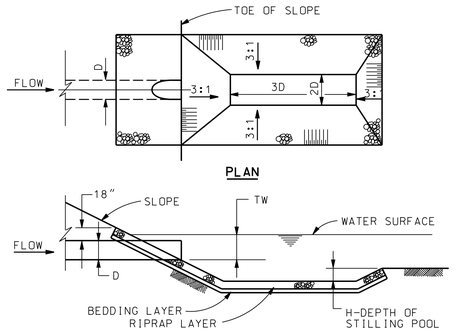

LONGITUDINAL ELEVATION
PROTECTION AT CULVERT IN AN UNDEFINED CHANNEL
STILLING POOL

DETAIL 008-001

N.T.S.

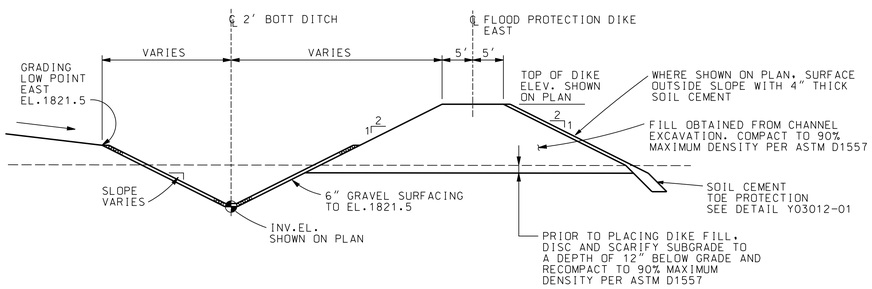

DETAIL 008-03

SCALE:1"=10'-0"

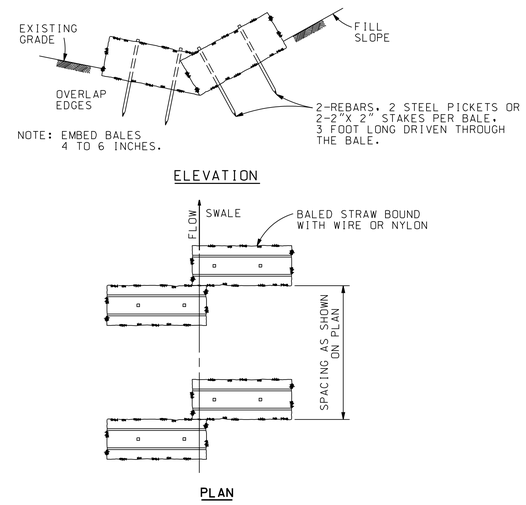

USE: TO BE USED AS A SEDIMENT TRAP IN A SWALE.

TYPICAL DETAIL
STRAW BALE EROSION CHECK FOR SWALE

DETAIL 008-004

N.T.S.

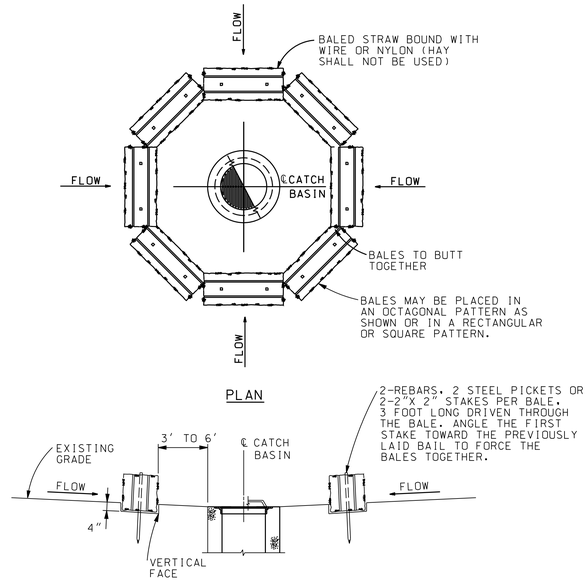

TYPICAL DETAIL
SINGLE ROW STRAW BALE EROSION CHECK
FOR CATCH BASINS ON SOIL, GRAVEL OR GRASS SURFACE

DETAIL 008-006

N.T.S.

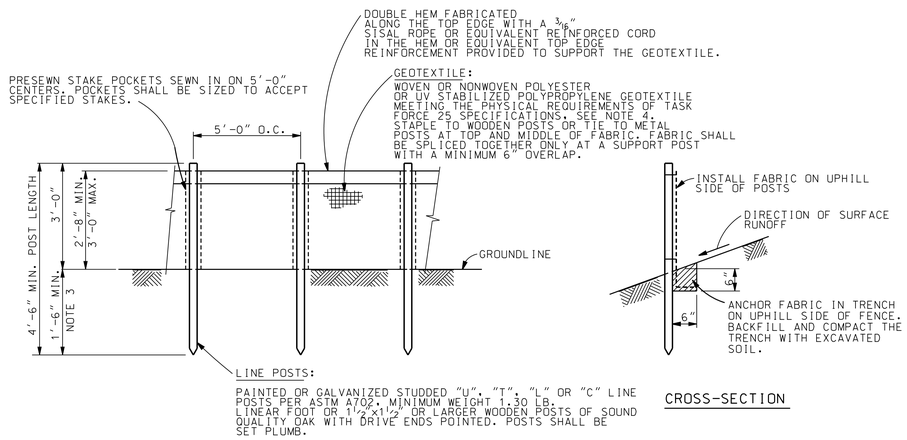

NOTES:

1. AFTER INSTALLATION, THE CONTRACTOR SHALL BE RESPONSIBLE FOR SATISFACTORILY MAINTAINING THE FENCE. THE CONTRACTOR SHALL INSPECT FENCES AFTER EACH RAINFALL AND AT LEAST DAILY DURING PROLONGED RAINFALL. CONTRACTOR IS RESPONSIBLE FOR REMOVING AND REPLACING SILT FENCING NOT FUNCTIONING DUE TO CLOGGING, DAMAGE OR DETERIORATION.
2. CONTRACTOR SHALL BE RESPONSIBLE FOR REMOVAL AND DISPOSAL OF FENCING WHEN, AS DETERMINED BY THE PURCHASER, THE FENCING IS NO LONGER NEEDED.
3. WHERE 18" DEPTH IS IMPOSSIBLE TO ACHIEVE THE POSTS SHALL BE SECURED TO PREVENT OVERTURNING OF THE FENCE DUE TO SEDIMENT LOAD.
4. THE FOLLOWING SELF SUPPORTING GEOTEXTILE FENCES MEET THE PHYSICAL REQUIREMENTS OF TASK FORCE 25 AND ACCEPTABLE:
   a. AMOCO 1380 (WOVEN SLIT-FILM POLYPROPYLENE)
   b. MIRIFI 100X SILT FENCE (WOVEN SLIT-FILM POLYPROPYLENE)
   c. CARTHAGE MILLS FX-11 SILT FENCE (WOVEN SLIT-FILM POLYPROPYLENE)

TYPICAL DETAIL
SELF-SUPPORTING SILT FENCE

DETAIL 008-003

N.T.S.

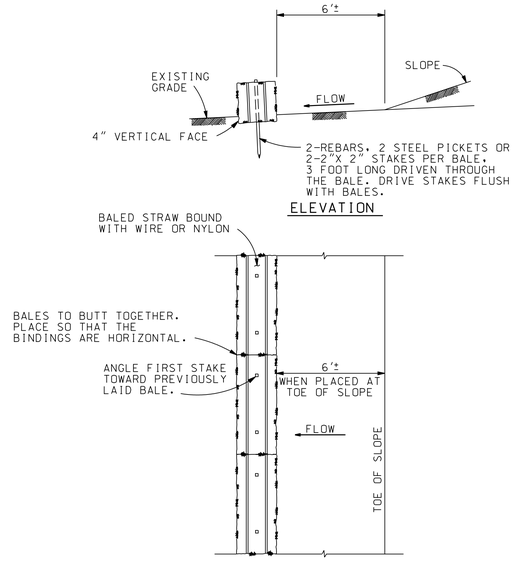

USE: TO BE USED TO INTERCEPT SHEET FLOW ACROSS AN OPEN AREA OF FLOW OFF OF A SLOPE WHERE THE EXISTING GROUND SLOPES AWAY FROM THE TOE OF THE SLOPE.

TYPICAL DETAIL
STRAW BALE DIKE

DETAIL 008-005

N.T.S.

DRAWING RELEASE RECORD

REV.	DATE REL'D.	PREPARED	REVIEWED	APPROVED	PURPOSE

DRAWING RELEASE RECORD

REV.	DATE REL'D.	PREPARED	REVIEWED	APPROVED	PURPOSE
0	03-28-2007	A.SLACH	R.CHACKANAD	D.DAHLBERG	CLIENT REVIEW

SCALE: NONE

PROJECT NUMBER: 11962-003

EROSION/SEDIMENT CONTROL DETAILS

COMBINED CYCLE PLANT
ETIWANDA PROJECT
RELIANT ENERGY
SAN BERNARDINO, CALIFORNIA

Sargent & Lundy LLC

DRAWING NO. CSWPPP-008 REV. 0

SHEET 1 OF 2

ZD2108/028307/dt#028307#2-PROJECTS#Etiwanda#Combined Cycle#cswppp-008.dgn
3/27/2007 10:57:55 AM
REV. 417(1/2006)

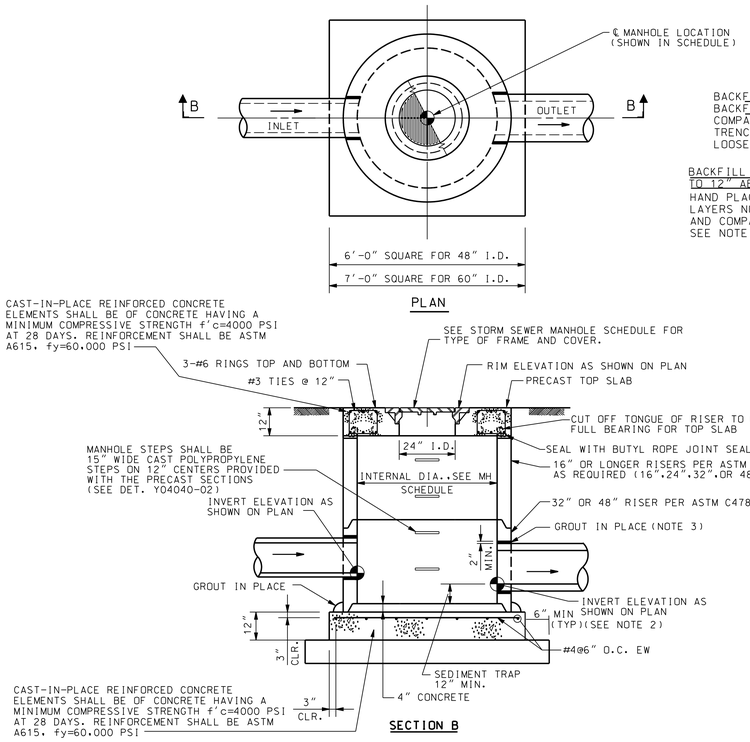

COVER TYPES	
PLANT AREA AND ROADWAY COVERS	
NEENAH CATALOG NO.	DESCRIPTION
R-6050. TYPE C LID	310 LB HEAVY DUTY ROUND CAST IRON FRAME AND SOLID COVER FOR SLAB CONST.
R-6115. TYPE Y GRATE	445 LBS ROUND HEAVY DUTY CAST IRON FRAME GRATE FOR SLAB CONST.

COVER TYPES	
PARKWAY / ROADSIDE DITCH	
NEENAH CATALOG NO.	DESCRIPTION
R-4353	210 LB MEDIUM DUTY ROUND CAST IRON FRAME AND BEEHIVE GRATE FOR SLAB CONST.

NOTES:

1. A STANDARD PRECAST CONCRETE MANHOLE BASE DESIGNED FROM H-20 TRUCK LOAD MAY BE SUBSTITUTED FOR THE BASE SHOWN.
2. WHERE PRECAST BASES ARE USED A 6 INCH THICK GRAVEL OR CRUSHED ROCK SHALL BE PROVIDED BENEATH THE BASE. THE BEDDING COARSE SHALL COVER THE ENTIRE BOTTOM OF THE EXCAVATION.
3. GROUT FOR SEALING THE BASE AND PIPES SHALL BE 1 PART PORTLAND CEMENT TO 3 PARTS SAND.
4. ALL LIFT HOLES SHALL BE FILLED WITH A CONCRETE PLUG AND SEALED WITH BITUMEN MATERIAL.
5. ALL PRECAST MANHOLE RISERS. GRADE RINGS AND MANHOLE COVERS SHALL BE SET IN BUTYL ROPE PREFORMED JOINT SEALANT. PRESS-SEAL EZ-STIK. OR EQUAL.

TYPE 2 MANHOLE
DETAIL 009-001
N.T.S.

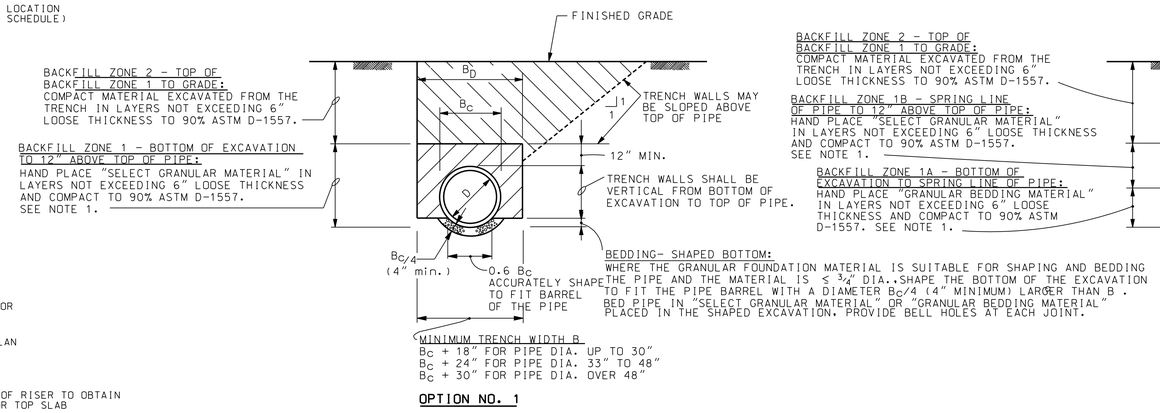

USE ONLY FOR PIPE INSTALLED IN NATURAL FOUNDATION SOILS WHICH ARE GRANULAR AND SUITABLE FOR SHAPING A PIPE BEDDING

FOR PIPE INSTALLED IN COHESIVE, SILTY OR ROCKY FOUNDATION SOILS ALSO MAY BE USED FOR GRANULAR FOUNDATION SOILS

BEDDING AND BACKFILL REQUIREMENTS
SINGLE SEWER OR CULVERT INSTALLATION IN A TRENCH IN SOIL
CLASS "B" BEDDING
DETAIL 009-003
N.T.S.

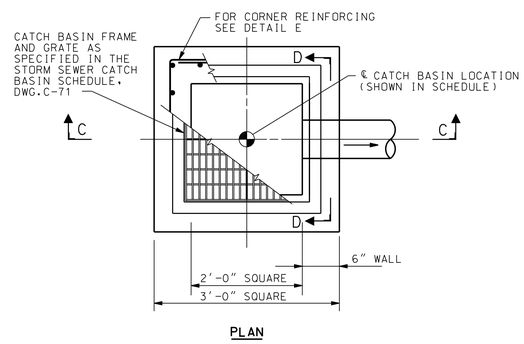

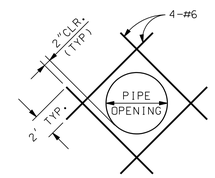

TYPICAL REINFORCING AT PIPE OPENINGS
SECTION D
N.T.S.

A - CRUSHED ROCK - 4" THICK
GRADATION CA-3 PLUS CA-7 (COURSE AGGREGATE FOR CLASS A CONCRETE). QUALITY CLASS B. 90% CRUSHED PARTICLES. NO GRAVEL OR SLAG. PER IDOT SECTION 704. PLACE AND SPREAD. NO COMPACTION REQUIRED.

B - SOIL SEPARATOR - 1 LAYER
SPUN BONDED. NON-WOVEN. NEEDLE PUNCHED POLYESTER GEOTEXTILE. 4.1 OR 4.5 OZ./SY. TRIVERA NO.1114 (CONTECH CONST. PRODUCTS.INC. DISTRIBUTOR) OR BIDAM NO.C-22 (OULINE CORP.) OR CARTHAGE 4.1 OZ./SY.OZ. NON-WOVEN GREY GEOTEXTILE (CARTHAGE MILLS). OR APPROVED EQUAL.

C - SUBGRADE PREPARATION
BLADE AND ROLL FIRM. PROVIDE EXCAVATION WHERE NECESSARY TO FEATHER SURFACING TO ROAD SHOULDERS AND TO MAINTAIN EXISTING DRAINAGE PATTERNS.

SURFACING OVER INSITU GRANULAR SOILS IN AREAS SUBJECT TO LOW VEHICULAR TRAFFIC

FINISH SURFACING - CRUSHED ROCK SURFACING
DETAIL 009-004
N.T.S.

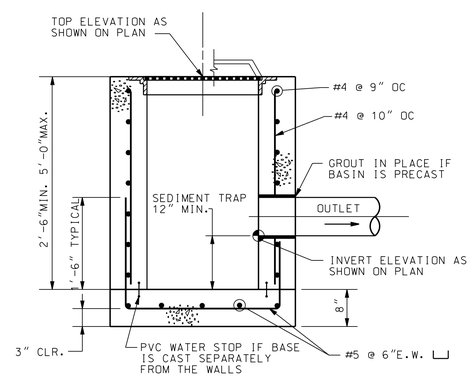

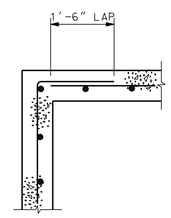

TYPICAL CORNER
DETAIL E
N.T.S.

COVER TYPES	
NEENAH CATALOG NO.	DESCRIPTION
R-6672-E.FRAME W	SQUARE GRATED COVER AND FRAME - HEAVY DUTY

TYPE 1 CATCH BASIN
DETAIL 009-002
N.T.S.

DRAWING RELEASE RECORD

REV.	DATE REL'D.	PREPARED	REVIEWED	APPROVED	PURPOSE

DRAWING RELEASE RECORD

REV.	DATE REL'D.	PREPARED	REVIEWED	APPROVED	PURPOSE
0	03-28-2007	A.SLACH	R.CHACKANAD	D.DAHLBERG	CLIENT REVIEW

SCALE: NONE
PROJECT NUMBER: 11962-003

EROSION/SEDIMENT CONTROL DETAILS

COMBINED CYCLE PLANT
ETIWANDA PROJECT
RELIANT ENERGY
SAN BERNARDINO, CALIFORNIA

Sargent & Lundy LLC

DRAWING NO. CSWPPP-009 REV. 0
SHEET 2 OF 2

Z0210B/028307/dt#028307#2-PROJECTS#Etiwanda#Combined Cycle#cswppp-009.dgn
3/27/2007 11:00:13 AM
REV. 4/11/2004

Attachment C

BMP Consideration Checklist

CONSTRUCTION SITE BMPs CONSIDERATION CHECKLIST					
The BMPs listed here should be considered for every project. Those BMPs that are not included in the SWPPP must be checked as "Not Used" with a brief statement describing why it is not being used.					
EROSION CONTROL BMPs					
BMP No.	**BMP**	**CONSIDERED FOR PROJECT**	**CHECK IF USED**	**CHECK IF NOT USED**	**IF NOT USED, STATE REASON**
EC-1	Scheduling	√	√		
EC-2	Preservation of Existing Vegetation			√	Entire site is being cleared and resurfaced w/asphalt foundations, or aggregate
EC-3	Hydraulic Mulch			√	Not applicable to aggregate surfacing
EC-4	Hydroseeding			√	Not applicable to aggregate surfacing
EC-5	Soil Binders			√	Not applicable to aggregate surfacing
EC-6	Straw Mulch			√	Not applicable to aggregate surfacing
EC-7	Geotextiles & Mats			√	No steep side slopes
EC-8	Wood Mulching			√	No landscaping included
EC-9	Earth Dikes & Drainage Swales	√	√		
EC-10	Velocity Dissipation Devices	√	√		
EC-11	Slope Drains			√	No steep side slopes
EC-12	Stream bank Stabilization	√	√		
EC-13	Polyacrylamide				

CONSTRUCTION SITE BMPs
CONSIDERATION CHECKLIST

The BMPs listed here should be considered for every project. Those BMPs that are not included in the SWPPP must be checked as "Not Used" with a brief statement describing why it is not being used.

BMP No.	BMP	CONSIDERED FOR PROJECT	CHECK IF USED	CHECK IF NOT USED	IF NOT USED, STATE REASON
SEDIMENT CONTROL BMPs					
SE-1	Silt Fence	√	√		
SE-2	Sediment Basin	√	√		
SE-3	Sediment Trap	√	√		
SE-4	Check Dam	√	√		
SE-5	Fiber Rolls			√	No landscaping areas proposed
SE-6	Gravel Bag Berm	√	√		
SE-7	Street Sweeping and Vacuuming	√	√		
SE-8	Sand Bag Barrier			√	No site run-on sources
SE-9	Straw Bale Barrier	√	√		
SE-10	Storm Drain Inlet Protection	√	√		
SE-11	Chemical Treatment			√	Sediment is primary concern
WIND EROSION CONTROL BMPs					
WE-1	Wind Erosion Control	√	√		
TRACKING CONTROL BMPs					
TR-1	Stabilized Construction Entrance/Exit	√	√		
TR-2	Stabilized Construction Roadway	√	√		
TR-3	Entrance/Outlet Tire Wash			√	1500' to 3300' of stabilized construction roadway considered

CONSTRUCTION SITE BMPs
CONSIDERATION CHECKLIST

The BMPs listed here should be considered for every project. Those BMPs that are not included in the SWPPP must be checked as "Not Used" with a brief statement describing why it is not being used.

NON-STORM WATER MANAGEMENT BMPs

BMP No.	BMP	CONSIDERED FOR PROJECT	CHECK IF USED	CHECK IF NOT USED	IF NOT USED, STATE REASON
NS-1	Water Conservation Practices	√	√		
NS-2	Dewatering Operations	√	√		
NS-3	Paving and Grinding Operations	√	√		
NS-4	Temporary Stream Crossing	√	√		
NS-5	Clear Water Diversion			√	No water run on from offsite
NS-6	Illicit Connection/ Discharge	√	√		
NS-7	Potable Water/Irrigation			√	No potable water or irrigation during construction
NS-8	Vehicle and Equipment Cleaning			√	Cleaning vehicles on site will be prohibited
NS-9	Vehicle and Equipment Fueling	√	√		
NS-10	Vehicle and Equipment Maintenance	√	√		
NS-11	Pile Driving Operations	√	√		
NS-12	Concrete Curing	√	√		
NS-13	Concrete Finishing	√	√		
NS-14	Material and Equipment Use Over Water			√	No water bodies present
NS-15	Demolition Adjacent to Water			√	No water bodies present
NS-16	Temporary Batch Plants	√	√		

CONSTRUCTION SITE BMPs
CONSIDERATION CHECKLIST

The BMPs listed here should be considered for every project. Those BMPs that are not included in the SWPPP must be checked as "Not Used" with a brief statement describing why it is not being used.

WASTE MANAGEMENT AND MATERIALS POLLUTION CONTROL BMPs

BMP No.	BMP	CONSIDERED FOR PROJECT	CHECK IF USED	CHECK IF NOT USED	IF NOT USED, STATE REASON
WM-1	Material Delivery and Storage	√	√		
WM-2	Material Use	√	√		
WM-3	Stockpile Management	√	√		
WM-4	Spill Prevention and Control	√	√		
WM-5	Solid Waste Management	√	√		
WM-6	Hazardous Waste Management	√	√		
WM-7	Contaminated Soil Management			√	No existing contaminated soil (Environmental Assessment Pending)
WM-8	Concrete Waste Management	√	√		
WM-9	Sanitary/Septic Waste Management	√	√		
WM-10	Liquid Waste Management		√	√	No liquid waste anticipated

Attachment D

Computation Sheet for Determining Runoff Coefficients

Total Site Area = 16.93 Acres (A)

Existing Site Conditions

Using Table B-2 of reference 2 and the ratio of impervious to total areas (2.8 acres/16.93 acres) = 16.5% yields a value of 0.25 for "C".

Impervious Site Area = 2.8 acres (B)

Impervious Site Area Runoff Coefficient = .95 (C)

2.8 * 0.95 = 2.66

Pervious Site Area (grass) = 5 acres (D)

Grass Area Runoff Coefficient = .12 (ref.3) (E)

5 * .12 = .6

Pervious Area (soil) = 9.13 acres

Soil Area Runoff Coefficient = 0.3 acres

9.13 * .3 = 2.74

2.66 + .6 + 2.74 = 6.0

6.0/16.93 = .35

(avg. of two sources) Existing Site Area Runoff Coefficient = .30 (F)

Note:

1.) The location of the temporary construction access road follows an existing road. The only modification in this area is refurbishing of the existing aggregate surfacing. Therefore, the road is not included in this calculation. In addition, lay down and parking outside the construction limits are not considered in this calculation.

Proposed Site Conditions (after construction)

The C-value in ref. 1, table B-2 for 49% impervious is 0.53.

Impervious Site Area	=	5.5 acres	(G)
Impervious Site Area Runoff Coefficient	=	0.95	(H)
		5.5 * .95 = 5.23	
Pervious Site Area (aggregate)	=	9.37 acres	(I)
Pervious Site Area Runoff Coefficient	=	0.5	(J)
9.37 * .5		4.685	
4.685 + 5.23		9.92	
9.92/14.87		.67	
Avg. of Two Sources Proposed Site Area Runoff Coefficient	=	0.60	(K)

1. Includes paved areas, areas covered by buildings, and other impervious surfaces.
2. Use 0.95 unless lower or higher runoff coefficient can be verified.
3. Includes areas of vegetation, most unpaved or uncovered soil surfaces, and other pervious areas.
4. Refer to local Hydrology Manual for typical C values.

Note: Cooling towers and transformer capture 100% of precipitation falling on those structures. Therefore, these areas are deleted from the post-construction runoff values.

Total Area:	16.93 acres
Cooling Tower Area	1.97 acres
Transformer Area	.12 acres
Post-Construction Balance of Site:	14.87 acres
Impervious Surfacing	5.50 acres
Aggregate Surfacing	9.37 acres

Attachment E

Computational Sheet for Determining Run-on Discharges-Not Applicable

Note general drainage is from north to south across the site. A railroad embankment fill and (proposed) retaining wall prevents any site run-on. Therefore, this attachment does not apply to the subject site.

Attachment F

Notice of Intent (NOI)

State Water Resources Control Board

NOTICE OF INTENT

TO COMPLY WITH THE TERMS OF THE
GENERAL PERMIT TO DISCHARGE STORM WATER
ASSOCIATED WITH CONSTRUCTION ACTIVITY (WQ ORDER No. 99-08-DWQ)

I. NOI STATUS (SEE INSTRUCTIONS)

MARK ONLY ONE ITEM 1. ☐ New Construction 2. ☐ Change of Information for WDID#

II. PROPERTY OWNER

Name	Contact Person		
Mailing Address	Title		
City	State	Zip	Phone ( ) --

III. DEVELOPER/CONTRACTOR INFORMATION

Developer/Contractor	Contact Person		
Mailing Address	Title		
City	State	Zip	Phone ( ) --

IV. CONSTRUCTION PROJECT INFORMATION

Site/Project Name	Site Contact Person		
Physical Address/Location	Latitude 34°05'280" ____°	Longitude 117°31'408" ____°	County **San Bernardino**
City (or nearest City)	Zip	Site Phone Number ( ) --	Emergency Phone Number ( ) --

A. Total size of construction site area: _____ Acres

B. Total area to be disturbed: _____ Acres (% of total 100%)

C. Percent of site imperviousness (including rooftops):

Before Construction: 15 %

After Construction: 49 %

D. Tract Number(s): _____, _____

E. Mile Post Marker: _____

F. Is the construction site part of a larger common plan of development or sale?

☒ YES ☐ NO

Note: No other construction areas at this time.

G. Name of plan or development:
Combined cycle project, Etiwanda Plant, Reliant Energy , Inc.

H. Construction commencement date: 09 / 01 / 08

I. % of site to be mass graded: 100%

J. Projected construction dates:

Complete grading: 03 / 31 / 09 Complete project: 02 / 28 / 10

K. Type of Construction (Check all that apply):

1. ☐ Residential 2. ☐ Commercial 3. ☐ Industrial 4. ☐ Reconstruction 5. ☐ Transportation

6. ☐ Utility Description: _____ 7. ☒ Other (Please List): Power Utility

V. BILLING INFORMATION

SEND BILL TO: ☐ OWNER (as in II. above)	Name	Contact Person	
☐ DEVELOPER (as in III. above)	Mailing Address	Phone/Fax	
☐ OTHER (enter information at right)	City	State	Zip

VI. REGULATORY STATUS

A. Has a local agency approved a required erosion/sediment control plan?..... ☐ YES ☒ NO

Does the erosion/sediment control plan address construction activities such as infrastructure and structures?..... ☐ YES ☐ NO

Name of local agency:_____ Phone: (_____) _____--_____

B. Is this project or any part thereof, subject to conditions imposed under a CWA Section 404 permit of 401 Water Quality Certification?..... ☐ YES ☐ NO

If yes, provide details: _____

VII. RECEIVING WATER INFORMATION

A. Does the storm water runoff from the construction site discharge to (Check all that apply):

1. ☐ **Indirectly to waters of the U.S.**

2. ☒ **Storm drain system - Enter owner's name: __Chadwick Creek/ Reliant Etiwanda Inc.**

3. ☐ **Directly to waters of U.S. (e.g., river, lake, creek, stream, bay, ocean, etc.)**

B. Name of receiving water: (river, lake, creek, stream, bay, ocean): _____Day Creek_____

VIII. IMPLEMENTATION OF NPDES PERMIT REQUIREMENTS

A. STORM WATER POLLUTION PREVENTION PLAN (SWPPP) (check one)

☐ A SWPPP has been prepared for this facility and is available for review: Date Prepared: ____/____/____ Date Amended: ____/____/____

☐ A SWPPP will be prepared and ready for review by (enter date): ____/____/____

☐ A tentative schedule has been included in the SWPPP for activities such as grading, street construction, home construction, etc.

B. MONITORING PROGRAM

☐ A monitoring and maintenance schedule has been developed that includes inspection of the construction BMPs before anticipated storm events and after actual storm events and is available for review.

If checked above: A qualified person has been assigned responsibility for pre-storm and post-storm BMP inspections to identify effectiveness and necessary repairs or design changes..... ☐ YES ☐ NO

Name: _____ Phone: (_____) _____

C. PERMIT COMPLIANCE RESPONSIBILITY

A qualified person has been assigned responsibility to ensure full compliance with the Permit, and to implement all elements of the Storm Water Pollution Prevention Plan including:

1. Preparing an annual compliance evaluation..... ☐ YES ☐ NO

Name: _____ Phone: (_____) _____--_____

2. Eliminating all unauthorized discharges..... ☐ YES ☐ NO

IX. VICINITY MAP AND FEE (must show site location in relation to nearest named streets, intersections, etc.)

Have you included a vicinity map with this submittal? ..... ☒ YES ☐ NO

Have you included payment of the annual fee with this submittal?..... ☒ YES ☐ NO

X. CERTIFICATIONS

"I certify under penalty of law that this document and all attachments were prepared under my direction and supervision in accordance with a system designed to assure that qualified personnel properly gather and evaluate the information submitted. Based on my inquiry of the person or persons who manage the system, or those persons directly responsible for gathering the information, the information submitted is, to the best of my knowledge and belief, true, accurate, and complete. I am aware that there are significant penalties for submitting false information, including the possibility of fine or imprisonment. In addition, I certify that the provisions of the permit, including the development and implementation of a Storm Water Pollution Prevention Plan and a Monitoring Program Plan will be complied with."

Printed Name: _____

Signature: _____ **Date:** _____

Title: _____

Attachment G

Program for Maintenance, Inspection, and Repair of Construction Site BMPs

The contractor shall use the following guidelines for maintenance, inspection, and repair of BMPs identified in the SWPPP		
BEST MANAGEMENT PRACTICES (BMPs)	**INSPECTION FREQUENCY (all controls)**	**MAINTENANCE/REPAIR PROGRAM**
TEMPORARY EROSION CONTROL BMPs		
Velocity Dissipation Device Earth Dike and Drainage Swales	Weekly and after storm event > 0.5” Weekly and after storm events > 0.5”	■ Repair as needed
TEMPORARY SEDIMENT CONTROL BMPs		
Silt Fencing Ditch Checks/Dams (Rock, straw or silt fence) Sediment Traps	Weekly and after storm events > 0.5” Weekly and after storm events > 0.5” Weekly	■ Reinstall if collapsed ■ Remove accumulated sediment ■ Remove accumulated sediment ■ Remove accumulated sediment
WIND EROSION CONTROL BMPs		
Water Application	Daily as needed	■ As needed
TRACKING CONTROL BMPs		
Construction Entrance Public Street Sweeping Construction Road	Weekly Daily Weekly	■ Remove accumulated sediment ■ Sweep as required ■ Remove accumulated sediment

The contractor shall use the following guidelines for maintenance, inspection, and repair of BMPs identified in the SWPPP		
BEST MANAGEMENT PRACTICES (BMPs)	**INSPECTION FREQUENCY (all controls)**	**MAINTENANCE/REPAIR PROGRAM**
NON-STORM WATER MANAGEMENT BMPs		
Water Conservative Practices	On-going	■ Reduce & control water use.
Dewatering Operations	Daily during dewatering	■ Obtain permit if necessary, direct water to sediment basin, remove sediment as needed.
Paving & Grinding	On-going during paving	■ During paving & grinding, directs potential surface runoff to sediment basins. ■ Inspect for erosion, repair as needed.
Temporary Stream Crossings	Weekly & before/after storm events > 0.5”	■ Inspect for erosion, repair as needed.
Clearwater Diversion	Weekly & before/after storm events > 0.5”	■ Terminate any inappropriate observed discharges
Illicit Discharge	On-going	■ Perform activities is contained areas
Vehicle & Equipment Cleaning/Fueling	On-going and weekly & before/after storm events > 0.5”	■ Repair containment berms as needed clean spill as observed.
Vehicle & Equipment Maintenance	On-going and weekly & before/after storm events > 0.5”	■ Contain and remediate any observed spills/leaks
Pile Driving Operations	Ongoing & daily	■ Contain any runoff if rain event occurs during/after curing operation.
Concrete Curing	During and at conclusion of each concrete pour	■ Maintain containment of solids & liquids associated with concrete finishing
Concrete Finishing	During and after each concrete finishing activity	
Material Delivery & Storage	At each delivery weekly & before/after storm events > 0.5”	■ Store in contained area maintain berm
Material Use	During each use weekly before/after storm events > 0.5”	■ Use materials in contained areas maintain them
Stockpile Management	During placement weekly & before/after storm event > 0.5”	■ Repair silt fence & cover contain runoff
Spill Prevention & Control	On-going	■ Implement SPCC plan

The contractor shall use the following guidelines for maintenance, inspection, and repair of BMPs identified in the SWPPP		
BEST MANAGEMENT PRACTICES (BMPs)	**INSPECTION FREQUENCY (all controls)**	**MAINTENANCE/REPAIR PROGRAM**
WASTE MANAGEMENT AND MATERIALS POLLUTION CONTROL BMPs		
Solid Waste Management	On-going & weekly & before/after storm events > 0.5”	■ Place observed trash in appropriate containers, repair containment berm as needed.
Hazardous Waste Management	On-going & weekly & before/after storm events > 0.5”	■ Place hazardous waste in contained area, visual observation, and repair/remediate as needed.
Contaminated Soil Management	On-going & weekly & before/after storm events > 0.5”	■ Contain soil per remediation plan, repair containment as needed.
Concrete Waste Management	On-going & weekly during concrete pours	■ Direct run off to bermed area, repair berm as needed.
Sanitary Waste Management	As needed	■ Periodically observe level in portable waste reservoirs. Call for pump out as needed to prevent overflows.

Attachment H

Storm Water Quality Construction Site Inspection Checklist

GENERAL INFORMATION				
Project Name				
Project N^{o}				
Contractor				
Inspector's Name				
Inspector's Title				
Signature				
Date of Inspection				
Inspection Type (Check Applicable)	❒ Prior to forecast rain ❒ 24-hr intervals during extended rain		❒ After a rain event ❒ Other _____	
Season (Check Applicable)	❒ Rainy		❒ Non-Rainy	
Storm Data	Storm Start Date & Time:		Storm Duration (hrs):	
	Time elapsed since last storm (Circle Applicable Units)	Min. Hr. Days	Approximate Rainfall Amount (inches)	

PROJECT AREA SUMMARY AND DISTURBED SOIL AREA (DSA) SIZE		
Total Project Area	_____	Acres
Field Estimate of Active DSAs	_____	Acres
Field Estimate of Non-Active DSAs	_____	Acres

INSPECTION OF BMPs				
BMP	**Yes**	**No**	**N/A**	**Corrective Action**
Preservation of Existing Vegetation				
Is temporary fencing provided to preserve vegetation in areas where no construction activity is planned?				
Location:				
Location:				
Location:				
Location:				
Erosion Control				
Does the applied temporary erosion control provide 100% coverage for the affected areas?				
Are any non-vegetated areas that may require temporary erosion control?				
Is the area where erosion controls are used required free from visible erosion?				
Location:				
Location:				
Location:				
Location:				
Temporary Linear Sediment Barriers (Silt Fence, Fiber Rolls, Sandbag Barriers, etc.)				
Are temporary linear sediment barriers properly installed, functional and maintained?				
Are temporary linear sediment barriers free of accumulated litter?				
Is the built-up sediment less than 1/3 the height of the barrier?				
Are cross barriers installed where necessary and properly spaced?				
Location:				
Location:				
Location:				
Location:				
Location:				
Storm Drain Inlet Protection				
Are storm drain inlets internal to the project properly protected?				
Are storm drain inlet protection devices in working order and being properly maintained?				
Location:				
Location:				
Location:				
Location:				
Location:				
Sediment Basins				

INSPECTION OF BMPs				
BMP	**Yes**	**No**	**N/A**	**Corrective Action**
Are basins designed in accordance with the requirements of the General Permit?				
Are basins maintained to provide the required retention/detention?				
Are basin controls (inlets, outlets, diversions, weirs, spillways, and racks) in working order?				
Location:				
Location:				
Location:				
Location:				
Stockpiles				
Are all locations of temporary stockpiles, including soil, hazardous waste, and construction materials in approved areas?				
Are stockpiles protected from run-on, run-off from adjacent areas and from winds?				
Are stockpiles located at least 15 m from concentrated flows, downstream drainage courses and storm drain inlets?				
Are required covers and/or perimeter controls in place?				
Location:				
Location:				
Location:				
Location:				
Concentrated Flows				
Are concentrated flow paths free of visible erosion?				
Location:				
Location:				
Location:				
Location:				
Tracking Control				
Is the entrance stabilized to prevent tracking				
Is the stabilized entrance inspected daily to ensure that it is working properly				
Are points of ingress/egress to public/private roads inspected and swept and vacuumed as needed?				
Are all paved areas free of visible sediment tracking or other particulate matter?				
Location:				
Location:				
Location:				
Location:				
Wind Erosion Control				
Is dust control implemented?				

INSPECTION OF BMPs				
BMP	**Yes**	**No**	**N/A**	**Corrective Action**
Location:				
Location:				
Location:				
Location:				
Dewatering Operations				
Are all one-time dewatering operations covered by the General Permit inspected before and as they occur and BMPs implemented as necessary during discharge?				
Is ground water dewatering handled in conformance with the dewatering permit issued by the RWQCB?				
Is required treatment provided for dewatering effluent?				
Location:				
Location:				
Location:				
Location:				
Vehicle & Equipment Fueling, Cleaning, and Maintenance				
Are vehicle and equipment fueling, cleaning and maintenance areas reasonably clean and free of spills, leaks, or any other deleterious material?				
Are vehicle and equipment fueling, cleaning and maintenance activities performed on an impermeable surface in dedicated areas?				
If no, are drip pans used?				
Are dedicated fueling, cleaning, and maintenance areas located at least 15 m away from downstream drainage facilities and watercourses and protected from run-on and runoff?				
Is wash water contained for infiltration/ evaporation and disposed of appropriately?				
Is on-site cleaning limited to washing with water (no soap, soaps substitutes, solvents, or steam)?				
On each day of use, are vehicles and equipment inspected for leaks and if necessary, repaired?				
Location:				
Location:				
Location:				
Location:				
Waste Management & Materials Pollution Control				
Are material storage areas and washout areas protected from run-on and runoff, and located at least 15 m from concentrated flows and downstream drainage facilities?				
Are all material handling and storage areas clean; organized; free of spills, leaks, or any other deleterious material; and stocked with appropriate clean-up supplies?				
Are liquid materials, hazardous materials, and hazardous wastes stored in temporary containment facilities?				

INSPECTION OF BMPs				
BMP	**Yes**	**No**	**N/A**	**Corrective Action**
Are bagged and boxed materials stored on pallets?				
Are hazardous materials and wastes stored in appropriate, labeled containers?				
Are proper storage, clean-up, and spill-reporting procedures for hazardous materials and wastes posted in open, conspicuous and accessible locations adjacent to storage areas?				
Are temporary containment facilities free of spills and rainwater?				
Are temporary containment facilities and bagged/boxed materials covered?				
Are temporary concrete washout facilities designated and being used?				
Are temporary concrete washout facilities functional for receiving and containing concrete waste and are concrete residues prevented from entering the drainage system?				
Do temporary concrete washout facilities provide sufficient volume and freeboard for planned concrete operations?				
Are concrete wastes, including residues from cutting and grinding, contained and disposed of off-site or in concrete washout facilities?				
Are spills from mobile equipment fueling and maintenance properly contained and cleaned up?				
Is the site free of litter?				
Are trash receptacles provided in the yard, field trailer areas, and at locations where workers congregate for lunch and break periods?				
Is litter from work areas collected and placed in watertight dumpsters?				
Are waste management receptacles free of leaks?				
Are the contents of waste management receptacles properly protected from contact with storm water or from being dislodged by winds?				
Are waste management receptacles filled at or beyond capacity?				
Location:				
Location:				
Location:				
Location:				
Temporary Water Body Crossing or Encroachment				
Are temporary water body crossings and encroachments constructed appropriately?				
Does the project conform to the requirements of the 404 permit and/or 1601agreement?				
Location:				
Location:				
Location:				
Location:				
Illicit Connection/ Discharge				

INSPECTION OF BMPs				
BMP	**Yes**	**No**	**N/A**	**Corrective Action**
Is there any evidence of illicit discharges or illegal dumping on the project site?				
If yes, has the Owner/Operator been notified?				
Location:				
Location:				
Location:				
Location:				
Discharge Points				
Are discharge points and discharge flows free from visible pollutants?				
Are discharge points free of any significant sediment transport?				
Location:				
Location:				
Location:				
Location:				
SWPPP Update				
Does the SWPPP and Project Schedule adequately reflect the current site conditions and contractor operations?				
Are all BMPs shown on the water pollution control drawings installed in the proper location(s) and according to the details in the SWPPP?				
Location:				
Location:				
Location:				
Location:				
General				
Are there any other potential concerns at the site?				
Location:				
Location:				
Location:				
Location:				
Storm Water Monitoring				
Does storm water discharge directly to a water body listed in the General Permit as impaired for sediment/sedimentation or turbidity?				
If yes, were samples for sediment/sedimentation or turbidity collected pursuant to the sampling and analysis plan in the SWPPP?				
Did the sampling results indicate that the discharges are causing or contributing to further impairment?				

INSPECTION OF BMPs				
BMP	**Yes**	**No**	**N/A**	**Corrective Action**
If yes, were the erosion/sediment control BMPs improved or maintained to reduce the discharge of sediment to the water body?				
Were there any BMPs not properly implemented or breaches, malfunctions, leakages or spills observed which could result in the discharge of pollutants to surface waters that would not be visually detectable in storm water?				
If yes, were samples for non-visually detectable pollutants collected pursuant to the sampling and analysis plan during rain events?				
If sampling indicated pollution of the storm water, were the leaks, breaches, spills, etc. cleaned up and the contaminated soil properly disposed of?				
Were the BMPs maintained or replaced?				
Were soil amendments (e.g., gypsum, lime) used on the project?				
If yes, were samples for non-visually detectable pollutants collected pursuant to the sampling and analysis plan in the SWPPP?				
If sampling indicated pollution of the storm water by the use of the soil amendments, is there a contingency plan for retention onsite of the polluted storm water?				
Did storm water contact stored materials or waste and run off the construction site? (Materials not in watertight containers, etc.)				
If yes, were samples for non-visually detectable pollutants collected pursuant to the sampling and analysis plan in the SWPPP?				

Attachment I

Trained Contractor Personnel Log

Storm Water Management Training Log

Project Name: San Gabriel Generating Station

Project Number/Location: (Project # pending) Rancho Cucamonga, California

Storm Water Management Topic: (check as appropriate)

☒ Erosion Control

☒ Sediment Control

☒ Wind Erosion Control

☒ Tracking Control

☒ Non-storm water management

☒ Waste Management and Materials Pollution Control

☒ Storm Water Sampling

Specific Training Objective: _____

Location: _____ Date: _____

Instructor: _____ Telephone: _____

Course Length (hours): _____

Attendee Roster (attach additional forms if necessary)

Name	Company	Phone

Name	Company	Phone

COMMENTS:

Attachment J

Subcontractor Notification Letter and Notification Log

SWPPP Notification

Company
Address
City, State, ZIP

Dear Sir/Madam,

Please be advised that the California State Water Resources Control Board has adopted the General Permit (General Permit) for Storm Water Discharges Associated with Construction Activity (CAS000002). The goal of these permits is prevent the discharge of pollutants associated with construction activity from entering the storm drain system, ground and surface waters.

[Owner] has developed a Storm Water Pollution Prevention Plan (SWPPP) in order to implement the requirements of the Permits.

As a subcontractor, you are required to comply with the SWPPP and the Permits for any work that you perform on site. Any person or group who violates any condition of the Permits may be subject to substantial penalties in accordance with state and federal law. You are encouraged to advise each of your employees working on this project of the requirements of the SWPPP and the Permits. A copy of the Permits and the SWPPP are available for your review at the construction office. Please contact me if you have further questions.

Sincerely,

Name
Title

SUBCONTRACTOR NOTIFICATION LOG

Project Name: San Gabriel Generating Station Project

Project Number/Location: (Project # pending) Rancho Cucamonga, California

SUBCONTRACTOR COMPANY NAME	CONTACT NAME	ADDRESS	PHONE NUMBER	PAGER/ FIELD PHONE	DATE NOTIFICATION LETTER SENT	TYPE OF WORK

USE ADDITIONAL PAGES AS NECESSARY

Attachment K

Notice of Non-Compliance

To: Name of Owner [City/Agency Engineer]/Regional Board Staff Date: Insert Date

Subject: Notice of Non-Compliance

Project Name:	Insert Project Name
Project Number/Location:	Project number

In accordance with the NPDES Statewide Permit for Storm Water Discharges Associated with Construction Activity, the following instance of discharge is noted:

Date, time, and location of discharge

Insert description and date of event

Nature of the operation that caused the discharge

insert description of operation

Initial assessment of any impact cause by the discharge

insert assessment

Existing BMP(s) in place prior to discharge event

list BMPs in place

Date of deployment and type of BMPs deployed after the discharge.

BMPs deployed after the discharge (with dates)

Steps taken or planned to reduce, eliminate and/or prevent recurrence of the discharge

insert steps taken to prevent recurrence

Implementation and maintenance schedule for any affected BMPs

insert implementation and maintenance schedule

If further information or a modification to the above schedule is required, notify the contact person below.

Name of Contact Person	Title
Company	Telephone Number
Signature	Date

Attachment L

Storm Water Pollution Prevention Plan (SWPPP) and Monitoring Program Checklist

CONSTRUCTION PROJECT: _____

PREPARER: _____

CONTRACT NO: _____

SECTION A: STORM WATER POLLUTION PREVENTION PLAN (SWPPP)				
CHECK IF ADDRESSED N/A IF NOT APPLICABLE	**SWPPP Section**	**ITEM**	**GENERAL PERMIT REF.**	**COMMENTS**
	100	***SWPPP Certification and Approval***	C.10	
	100.1	SWPPP Certification	C.10	
	100.2	SWPPP Approval	C.10	
	200	***SWPPP Amendments***	A.4.a, A.16	
	200.1	Amendment number and date entered into SWPPP – Amendment Log	A.4.a, A.16	
	200.2	Amendment Certification and Approval	A.4.a, A.16	
	300	***Introduction/Project Description***		
	300.1	Project Description and Location (narrative)	A.5.a.1	
	300.2	Unique Site Features (narrative)	A.5.a.1	
	300.4	***Project Schedule (narrative and graphical)***	A.5.c.5	
	400	***References***	A.14	
	500.2	***Vicinity Map (narrative or graphic)***	A.5.a.1	
	500.2	Site perimeter	A.5.a.1	
	500.2	Geographic Features	A.5.a.1	
	500.2	General topography	A.5.a.1	
	500.4	***Water Pollution Control Drawings (WPCDs) (graphic or narrative)***	A.5.a.2	
	500.4	Site perimeter	A.5.a.2	

SECTION A: STORM WATER POLLUTION PREVENTION PLAN (SWPPP)

CHECK IF ADDRESSED N/A IF NOT APPLICABLE	SWPPP Section	ITEM	GENERAL PERMIT REF.	COMMENTS
	500.4	Existing and proposed buildings, lots, and roadways	A.5.a.2	
	500.4	Storm water collection and discharge points	A.5.a.2	
	500.4	General topography before and after construction	A.5.a.2	
	500.4	Anticipated discharge location(s)	A.5.a.2	
	500.4	Drainage patterns including the entire relevant drainage areas	A.5.a.2	
	500.4	Temporary on-site drainage(s)	A.5.a.2	
	500.3	***Pollutant Source and BMP Identification (narrate/ or indicate on site map)***	A.5.b	
		Drainage	A.5.b.1	
	500.4	Drainage patterns after major grading	A.5.b.1	
	500.4	Slopes after major grading	A.5.b.1	
	Attach. E	Calculations for storm water run-on	A.5.b.1	
	500.4	BMPs that divert off-site drainage from passing through site	A.5.b.1	
	500.4	***Storm Water Inlets***	A.5.b.2	
	500.4	Drainage patterns to storm water inlets or receiving water	A.5.b.2	
	500.4	BMPs that protect storm water inlets or receiving water	A.5.b.2	
		Site History (narrative; if possible, indicate location(s) on the Water Pollution Control Drawings)	A.5.b	
	500.3.3	Nature of fill material and data describing the soil. Description of toxic materials treated, stored, disposed, spilled or leaked on site	A.5.b.3	
	500.3.8 & 500.3.9	BMPs that minimize contact of contaminants with storm water	A.5.b.3	
		Location of Areas Designated for:	A.5.b.4	
	500.3.8 & 500.4	Vehicle storage & service	A.5.b.4	
	500.3.8 & 500.4	Equipment storage, cleaning, maintenance	A.5.b.4	
	500.3.9 & 500.4	Soil or waste storage	A.5.b.4	
	500.3.9 & 500.4	Construction material loading, unloading, storage and access	A.5.b.4	
	500.3.8 & 500.3.9	Areas outside of physical site (yards, borrow areas, etc.)		
		BMP Locations or Descriptions for:	A.5.b.5	
	500.3.9 & 500.4	Waste handling and disposal areas	A.5.b.5	

SECTION A: STORM WATER POLLUTION PREVENTION PLAN (SWPPP)				
CHECK IF ADDRESSED N/A IF NOT APPLICABLE	**SWPPP Section**	**ITEM**	**GENERAL PERMIT REF.**	**COMMENTS**
	500.3.9 & 500.4	On-site storage and disposal of construction materials and waste	A.5.b.5	
	500.3.8, 500.3.9 & 500.4	Minimum exposure of storm water to construction materials, equipment, vehicles, waste	A.5.b.5	
	500.6	***Post Construction BMPs***	A.5.b.6	
	500.6.1	Listing or Description of Post-construction BMPs	A.5.b.6	
	500.4	Location of post-construction BMPs	A.5.b.6	
	500.6.2	Parties responsible for long-term maintenance	A.5.b.6	
		Additional Information	A.5.c	
	500.3.1	Description of other pollutant sources and BMPs	A.5.c.1	
	500.3.2	Pre-construction control practices	A.5.c.1	
	500.3.1	Inventory of materials and activities that may pollute storm water	A.5.c.2	
	500.3.8 & 500.3.9	BMPs to reduce/eliminate potential pollutants listed in the inventory	A.5.c.2	
	300.4	Runoff coefficient (before & after)	A.5.c.3	
	300.4	Percent impervious (before & after)	A.5.c.3	
	Attach. F	Copy of the NOT	A.5.c.4	
	300.3	Construction activity schedule	A.5.c.5	
	300.5	Contact information	A.5.c.6	
	500.4.1	**SOIL STABILIZATION (EROSION CONTROL)**	A.6	
		The SWPPP shall include:	A.6.a-c	
	500.4	Areas of vegetation on site	A.6.a.1	
	500.4	Areas of soil disturbance that will be stabilized during rainy season	A.6.a.2	
	500.4	Areas of soil disturbance which will be exposed during any part of the rainy season	A.6.a.3	
	300.4	Implementation schedule for erosion control measures	A.6.a.4	
	500.3.4	BMPs for erosion control	A.6.b	
	500.3.7	BMPs to control wind erosion	A.6.c	
	500.3.5	**SEDIMENT CONTROL**	A.8	
	500.3.5 & 500.4	Description/Illustration of BMPs to prevent increase of sediment load in discharge	A.8	

SECTION A: STORM WATER POLLUTION PREVENTION PLAN (SWPPP)				
CHECK IF ADDRESSED N/A IF NOT APPLICABLE	**SWPPP Section**	**ITEM**	**GENERAL PERMIT REF.**	**COMMENTS**
	300.4, 500.3.5	Implementation schedule for sediment control measures	A.8	
	500.3.6	BMPs to control sediment tracking	A.8	
	500.3.8 & 500.3.9	**NON-STORM WATER MANAGEMENT**	A.9	
	500.3.8 & 500.3.9	Description of non-storm water discharges to receiving waters	A.9	
	500.3.8 & 500.3.9	Locations of discharges	A.9	
	500.3.8 & 500.3.9	Description of BMPs	A.9	
	300.5	Name and phone number of person responsible for non-storm water management	A.9	
	500.6	**POST-CONSTRUCTION**	A.10	
	500.6.1	Description of post-construction BMPs	A.10	
	500.6.2	Operation/Maintenance of BMPs after project completion (including short-term funding, long-term funding and responsible party)	A.10	
	500.5	**MAINTENANCE, INSPECTIONS, AND REPAIR**	A.11	
	300.5, 600.1	Name and phone number of person(s) responsible for inspections	A.11	
	600.1, Attach. H	Complete inspection checklist: date, weather, inadequate BMPs, visual observations of BMPs, corrective action, inspector's name, title, signature	A.11.a-f	
		OTHER REQUIREMENTS	A.12-16	
	500.7	Documentation of all training	A.12	
	500.8	List of Contractors/Subcontractors	A.13	

SECTION B: MONITORING AND REPORTING REQUIREMENTS				
CHECK IF ADDRESSED N/A IF NOT APPLICABLE	**SWPPP Section**	**ITEM**	**GENERAL PERMIT REF.**	**COMMENTS**
	600.1	Description of Site Inspection Plans	B.3	
	100.3	Compliance certification (annually 7/1)	B.4	
	600.2	Discharge reporting	B.5	
	600.3	Keep records of all inspections, compliance certifications, and noncompliance reports on site for a period of at least three years	B.6	
	600.4	Sampling and Analysis Plan for Sediment	B.7	

SECTION B: MONITORING AND REPORTING REQUIREMENTS				
CHECK IF ADDRESSED N/A IF NOT APPLICABLE	**SWPPP Section**	**ITEM**	**GENERAL PERMIT REF.**	**COMMENTS**
	600.5	Sampling and Analysis Plan for Non-Visible Pollutants	B.8	

SECTION C: STANDARD PROVISIONS FOR CONSTRUCTION ACTIVITIES				
CHECK IF ADDRESSED N/A IF NOT APPLICABLE	**SWPPP Section**	**ITEM**	**GENERAL PERMIT REF.**	**COMMENTS**
	100.1	Signed SWPPP Certification	C.9,10	

Attachment M

Annual Certification of Compliance Form

Project Name: _____

Project Number: _____

Company Name: _____

Address: _____

Construction Start Date: _____ **Completion Date:** _____

This project is in compliance with the General Permit and this SWPPP (check yes or no) ____ **YES** ____ **NO**

Description of Work:

description of work

Work Now in Progress:

work in progress

Work Planned for Next 12 Months:

work planned

"I certify under penalty of law that, during the past 12 months, the construction activities are in compliance with the requirements of the General Permit and this SWPPP. This Certification is based upon the site inspections required in Section B, Item 3 of the General Permit. This document was prepared under my direction or supervision in accordance with a system designed to assure that qualified personnel properly gather and evaluate the information submitted. Based on my inquiry of the person or persons who manage the system or those persons directly responsible for gathering the information, to the best of my knowledge and belief, the information submitted is, true, accurate, and complete. I am aware that there are significant penalties for submitting false information, including the possibility of fine and imprisonment for knowing violations."

Owner (or Authorized Representative) Signature	Date
Name and Title	Telephone Number

Attachment N

Other Plans and Permits

STATE WATER RESOURCES CONTROL BOARD
RESOLUTION NO. 2001 - 046

MODIFICATION OF WATER QUALITY ORDER 99-08-DWQ STATE WATER RESOURCES CONTROL BOARD (SWRCB) NATIONAL POLLUTANT DISCHARGE ELIMINATION SYSTEM (NPDES) GENERAL PERMIT FOR STORM WATER DISCHARGES ASSOCIATED WITH CONSTRUCTION ACTIVITY

WHEREAS:

1. The SWRCB adopted a statewide general NPDES permit for storm water discharges associated with construction activity (General Permit) on August 19, 1999.

2. The San Francisco BayKeeper, Santa Monica BayKeeper, San Diego BayKeeper, and Orange Coast Keeper filed a petition for writ of mandate challenging the General Permit in the Superior Court, County of Sacramento.

3. The court directed the SWRCB to modify the provisions of the General Permit to require permittees to implement specific sampling and analytical procedures to determine whether Best Management Practices implemented on a construction site are: (a) preventing further impairment by sediment in storm waters discharged directly into waters listed as impaired for sediment or silt, and (b) preventing other pollutants, that are known or should be known by permittees to occur on construction sites and that are not visually detectable in storm water discharges, from causing or contributing to exceedances of water quality objectives.

4. A public hearing was held on February 7, 2001 to receive comments on the proposed modification language. All comments and testimony have been considered. The Attachment specifies the changes to the monitoring provisions in the General Permit in response to the written comments submitted and the testimony taken at the hearing.

5. On April 4, 2001 an SWRCB Workshop was held and informal comments were heard from the public. The draft modification language was subsequently changed in response to these comments. This current draft is posted on the Internet web page in a strike-out/underline format.

THEREFORE BE IT RESOLVED THAT:

The SWRCB adopts the modified findings and monitoring provisions in the General Permit (Attachment).

CERTIFICATION

The undersigned, Clerk to the Board, does hereby certify that the foregoing is a full, true, and correct copy of a resolution duly and regularly adopted at a meeting of the State Water Resources Control Board held on April 26, 2001.

/s/
Maureen Marché
Clerk to the Board

Attachment to Resolution No. 2001-46

MODIFICATIONS TO WATER QUALITY ORDER 99-08-DWQ STATE WATER RESOURCES CONTROL BOARD (SWRCB) NATIONAL POLLUTANT DISCHARGE ELIMINATION SYSTEM (NPDES) GENERAL PERMIT FOR STORM WATER DISCHARGES ASSOCIATED WITH CONSTRUCTION ACTIVITY (GENERAL PERMIT)

MODIFICATIONS TO THE FACT SHEET

The following paragraph is added to BACKGROUND

On August 19, 1999, the State Water Resources Control Board (SWRCB) reissued the General Construction Storm Water Permit (Water Quality Order 99-08-DWQ referred to as "General Permit"). The San Francisco BayKeeper, Santa Monica BayKeeper, San Diego BayKeeper, and Orange Coast Keeper filed a petition for writ of mandate challenging the General Permit in the Superior Court, County of Sacramento. The Court issued a judgment and writ of mandate on September 15, 2000. The Court directed the SWRCB to modify the provisions of the General Permit to require permittees to implement specific sampling and analytical procedures to determine whether Best Management Practices (BMPs) implemented on a construction site are: (1) preventing further impairment by sediment in storm waters discharged directly into waters listed as impaired for sediment or silt, and (2) preventing other pollutants, that are known or should be known by permittees to occur on construction sites and that are not visually detectable in storm water discharges, from causing or contributing to exceedances of water quality objectives. The monitoring provisions in the General Permit have been modified pursuant to the court order.

MODIFICATIONS TO THE PERMIT

Finding 15:

The Monitoring Program and Reporting Requirements are modified in compliance with a judgment in the case of *San Francisco BayKeeper, et al. v. State Water Resources Control Board*. The modifications include sampling and analysis requirements for direct discharges of sediment to waters impaired due to sediment and for pollutants that are not visually detectable in runoff that may cause or contribute to an exceedance of water quality objectives.

SECTION A: STORM WATER POLLUTION PREVENTION PLAN (SWPPP)

1. Objectives

    e. Identify a sampling and analysis strategy and sampling schedule for discharges from construction activity which discharge directly into water bodies listed on Attachment 3. (Clean Water Act Section 303(d) [303(d)] Water

Bodies listed for Sedimentation).

f. For all construction activity, identify a sampling and analysis strategy and sampling schedule for discharges that have been discovered through visual monitoring to be potentially contaminated by pollutants not visually detectable in the runoff.

1. Implementation Schedule

d. Existing permittees shall revise their SWPPP in accordance with the sampling and analysis modifications prior to August 1, 2001. For ongoing construction activity involving a change of ownership the new owner shall review the existing SWPPP and amend the sampling and analysis strategy, if required, within 45 days. For construction activity commencing after the date of adoption, the SWPPP shall be developed in accordance with the modification language adopted.

5. Source Identification

b. Pollutant Source and BMP Identification

(7) Show the locations of direct discharge from the construction site into a Section 303(d) list water body. Show the designated sampling locations in the receiving waters, which represent the prevailing conditions of the water bodies upstream of the construction site discharge and immediately downstream from the last point of discharge.

(8) Show the locations designated for sampling the discharge from areas identified in Section A. 5. b. (2), (3), and (4) and Section A. 5. c. (1) and (2). Samples shall be taken should visual monitoring indicate that there has been a breach, malfunction, leakage, or spill from a BMP which could result in the discharge in storm water of pollutants that would not be visually detectable, or if storm water comes into contact with soil amendments or other exposed materials or contamination and is allowed to be discharged. Describe the sampling procedure, location, and rationale for obtaining the uncontaminated sample of storm water.

SECTION B: MONITORING PROGRAM AND REPORTING REQUIREMENTS

7. Monitoring Program for Sedimentation/Siltation

Dischargers of storm water associated with construction activity that directly enters a water body listed in Attachment 3 shall conduct a sampling and analysis program for the pollutants (sedimentation/siltation or turbidity) causing the impairment. The discharger shall monitor for the applicable parameter. If the water body is listed for sedimentation or siltation, samples should be analyzed for

Settleable Solids (ml/l) and Total Suspended Solids (mg/l). Alternatively or in addition, samples may be analyzed for suspended sediment concentration according to ASTM D3977-97. If the water body is listed for turbidity, samples should be analyzed for turbidity (NTU). Discharges that flow through tributaries that are not listed in Attachment 3 or that flow into Municipal Separate Storm Sewer Systems (MS4) are not subject to these sampling and analysis requirements. The sampling and analysis parameters and procedures must be designed to determine whether the BMPs installed and maintained prevent discharges of sediment from contributing to impairment in receiving waters.

Samples shall be collected during the first two hours of discharge from rain events which result in a direct discharge to any water body listed in Attachment 3. Samples shall be collected during daylight hours (sunrise to sunset). Dischargers need not collect more than four (4) samples per month. All samples shall be taken in the receiving waters and shall be representative of the prevailing conditions of the water bodies. Samples shall be collected from safely accessible locations upstream of the construction site discharge and immediately downstream from the last point of discharge.

For laboratory analysis, all sampling, sample preservation, and analyses must be conducted according to test procedures under 40 CFR Part 136. Field samples shall be collected and analyzed according to the specifications of the manufacturer of the sampling devices employed. Portable meters shall be calibrated according to manufacturer's specification. All field and/or laboratory analytical data shall be kept in the SWPPP document, which is to remain at the construction site at all times until a Notice of Termination has been submitted and approved.

8. Monitoring Program for Pollutants Not Visually Detectable in Storm Water

A sampling and analysis program shall be developed and conducted for pollutants which are not visually detectable in storm water discharges, which are or should be known to occur on the construction site, and which could cause or contribute to an exceedance of water quality objectives in the receiving water. Pollutants that should be considered for inclusion in this sampling and analysis program are those identified in Sections A.5.b. and A.5.c.

Construction materials and compounds that are not stored in water-tight containers under a water-tight roof or inside a building are examples of materials for which the discharger may have to implement sampling and analysis procedures. The goal of the sampling and analysis is to determine whether the BMPs employed and maintained on site are effective in preventing the potential pollutants from coming in contact with storm water and causing or contributing to an exceedance of water quality objectives in the receiving waters. Examples of construction sites that may require sampling and analysis include: sites that are known to have contaminants spilled or spread on the ground; sites where construction practices include the application of soil amendments, such as

gypsum, which can increase the pH of the runoff; or sites having uncovered stockpiles of material exposed to storm water. Visual observations before, during, and after storm events may trigger the requirement to collect samples. Any breach, malfunction, leakage, or spill observed which could result in the discharge of pollutants to surface waters that would not be visually detectable in storm water shall trigger the collection of a sample of discharge. Samples shall be collected at all discharge locations which drain the areas identified by the visual observations and which can be safely accessed. For sites where sampling and analysis is required, personnel trained in water quality sampling procedures shall collect storm water samples. A sufficiently large sample of storm water that has not come in contact with the disturbed soil or the materials stored or used on-site (uncontaminated sample) shall be collected for comparison with the discharge sample. Samples shall be collected during the first two hours of discharge from rain events that occur during daylight hours and which generate runoff.

The uncontaminated sample shall be compared to the samples of discharge using field analysis or through laboratory analysis. Analyses may include, but are not limited to, indicator parameters such as: pH, specific conductance, dissolved oxygen, conductivity, salinity, and TDS.

For laboratory analysis, all sampling, sample preservation, and analyses must be conducted according to test procedures under 40 CFR Part 136. Field discharge samples shall be collected and analyzed according to the specifications of the manufacturer of the sampling devices employed. Portable meters shall be calibrated according to manufacturer's specification. All field and/or analytical data shall be kept in the SWPPP document, which is to remain at the construction site at all times until a Notice of Termination has been submitted and approved.

STORM WATER POLLUTION PREVENTION MONITORING PROGRAM

RELIANT ENERGY ETIWANDA, Inc.
8996 Etiwanda Avenue
Rancho Cucamonga, CA 91739

Pollution Prevention Team

Daniel W. Ross, Reliant Energy Etiwanda, Inc., General Manager
Louis Lee, Reliant Energy Etiwanda Inc., Operations Manager

Updated March 26, 2004

STORM WATER POLLUTION PREVENTION MONITORING PROGRAM

I. OBJECTIVE

The Storm Water Pollution Prevention Monitoring Program has the following major objectives:

1. To ensure that storm water discharges are in compliance with the Discharge Prohibitions, Effluent Limitations, and Receiving Water Limitations specified in the State Water Board NPDES General Permit, Water Quality Order No. 97-03-DWQ, (Permit).

2. To ensure practices at the facility will reduce or prevent pollutants in storm water discharges and authorized non-storm water discharges are evaluated and revised to meet changing conditions.

3. To aid in the implementation and revision of the SWPP Plan.

4. To measure the effectiveness of Best Management Practices, (BMPs), which are to prevent or reduce pollutants in storm water discharges and authorized non-storm water discharges.

II. POLLUTION PREVENTION TEAM

This facility is Reliant Energy Etiwanda, Inc., a Natural Gas Burning Electrical Generating Facility. The Pollution Prevention Team for the Reliant Energy Etiwanda Facility and their responsibilities are:

1. Daniel W. Ross (General Manager) has overall responsibility for all Stormwater Compliance issues and is the Responsible Officer for Reliant Energy Etiwanda Inc.

2. Louis Lee has overall responsibility for conducting all monitoring program actions associated with the Stormwater Pollution Prevention Plan and Monitoring Program, and revisions to the plan.

III. SITE MAPS

The SWPP Plan and SWPP Monitoring Program facility site maps, identifies the four sampling locations:

D-1. Outflow - The discharge point of the 30 inch storm water line as it flows from the pipe onto the ground where it leaves the South side of the facility, at the South-East corner of the facility.

D-2 Inflow - The entrance point of Chadwick Channel, as the channel flows onto the North side of the facility, about the center of the North side of the property. Chadwick Channel flow is from the North to the South across the facility.

D-3 Outflow - The exiting point of Chadwick Channel is where the channel flow leaves from the South side of the facility, about the center of the South side of the facility. Chadwick Channel continues to flow off the facility in a Southerly direction.

D-4 Inflow - The sample is collected before the first point where flow from the facility enters into the 30 inch storm water line, where it enters into the North side of the property. This access is located at the North-West corner of the facility make-up Reservoir. The 30 inch storm water line flows from the North to the South across the facility.

IV. NON-STORM WATER DISCHARGE VISUAL OBSERVATIONS

A. As indicated, the Pollution Prevention Team has overall responsibility for the SWPP Monitoring program implementation, and is responsible for conducting all SWPP Monitoring Program activities which include:

1. Visual observations of all drainage areas within the facility for the presence of unauthorized non-storm water discharges.

2. Visual observations of the facility's authorized non-storm water discharges and their sources, which include:
   Irrigation drainage
   Potable water sources
   Landscape watering
   Atmosphere condensates (i.e. air conditioning condensate)

B. Visual observations shall be made once per quarter:
   January - March
   April-June
   July - September
   October - December

Observations shall be scheduled during facility daylight hours, on days with no storm water discharges, within 6-18 weeks of each other. Visual observations shall record the presence of any discolorations, stains, odors, floating materials, etc., as well as the source of any discharge; and be documented on the Santa Ana Regional Water Quality Control Board, (SARWQCB), Storm Water Annual Report, Form 2 - Record of Dry Season Visual Observations, (see Attachment 1).

C. SARWQCB Storm Water Annual Report, Form 2 - Record of Dry Season Visual Observations records shall be maintained on file for five (5) years: these include the visual observation dates, locations observed, observations, any response taken to eliminate unauthorized non-storm water discharges, and any action taken to reduce or prevent pollutants from contacting non-storm water discharges.

D. If any response actions are taken to eliminate unauthorized non-storm water discharges and to reduce or prevent pollutants from contacting non-storm water discharges, the SWPP Plan shall be revised and implemented as necessary.

V. STORM WATER DISCHARGE VISUAL OBSERVATIONS

A. As indicated, the Pollution Prevention Team has the overall responsibility for the SWPP Monitoring Program implementation, and is responsible for conducting all SWPP Monitoring Program activities which include:

1. Visual observations of storm water discharges from one storm event per month during the wet season, (October 1 - May 30).

2. Visual observations of storm water discharges are not required due to dangerous weather conditions, such as flooding, electrical storm, etc. However, if visual observations are not made due to these exceptions, an explanation shall be included in the SARWQCB Storm Water Annual Report.

B. Visual observations shall occur at all discharges locations during the first hour of discharge only, for discharges that occur during scheduled facility daylight hours that are preceded by at least three (3) working days (which may be separated by non-working days with no storm water discharges) without storm water discharges. Visual observations shall record the presence of:

Floating and suspended material	Oil and grease
Discolorations	Turbine
Odor	Source of any pollutants

Any observations shall be documented on the SARWQCB Storm Water Annual Report, Form 3 - Record of Wet Season Visual Observations, (see Attachment 2).

C. If any responses are taken to reduce or prevent pollutants in storm water discharges, the SWPP Plan shall be revised and implemented as necessary.

VI. STORM WATER SAMPLING & ANALYSIS

A. As indicated, the Pollution Prevention Team has the overall responsibility for the SWPP Monitoring Program implementation, and is responsible for conducting all SWPP Monitoring Program activities which include:

1. Sample collection of storm water discharges from the first storm event of the wet season, (October 1 - May 30).

2. Sample collection of storm water discharges from at least one other storm event of the wet season, (October 1 - May 30).

B. Sample collection will be taken from each of the four sampling locations, (D1-D4), indicated in the SWPP Plan and monitoring Program site map, (see Attachment 1). This will represent the quality of the facility's storm water discharges during the first hour of discharge, or at time of release, for contained discharges. This is for storm water discharges that occur during scheduled facility hours that are preceded by at least three (3) working days without storm water discharge.

C. Sample collection shall be documented using SARWQCB Storm Water Annual Report Form 4 - Sampling Results, (see Attachment 3), and records shall be maintained on file for five (5) years.

D. All sampling and sample preservation shall be conducted in accordance with the current edition of "Standard Methods for the Examination of Water and Wastewater", (American Public Health Association). All monitoring instruments and equipment shall be calibrated and maintained in accordance with manufacturer's specifications to ensure accurate measurements. All laboratory analysis shall be conducted by a State Certified Laboratory and in accordance with test procedures under 40 CFR Part 136. All metals shall be reported as total metals.

E. Sample collection is not required due to dangerous weather conditions, such as flooding, electrical storm, etc. However, if samples are not collected due to these exceptions, an explanation shall be included in the SARWQCB Storm Water Annual Report.

F. Storm water discharge samples shall be analyzed for:

1. pH
2. Total Suspended Solids
3. Specific Conductivity
4. Oil and Grease
5. Total Organic Carbon
6. Iron

VII. MONITORING METHODS

The facility's SWPP Monitoring Program satisfies the objectives delineated in Section I as follows:

1. All overland discharges flow toward the South of the property either in the Chadwick Channel or the 30 inch Storm Drain. Visual observations occur at all drainage areas throughout the facility to ensure that all potential storm water discharges or non-storm water discharges are captured. Visual observations of non-storm water discharges occur quarterly, as indicated in Section IV. Visual observations of storm water discharges occur monthly during the wet season, as indicated in Section V.

2. The Operations Manager or designee collects samples at the locations and frequency described in Section VI. A State Certified Laboratory analyzes samples. Periodically, a "blank" may be included in the laboratory samples, in order to ensure Quality Assurance and Quality Control of the laboratory data.

3. The State Certified Laboratory will use appropriate water quality standard analytical methods and corresponding detection limits to detect any pollutants in the facility's storm water discharge, in accordance with test procedures under 40 CFR Part 136.

VIII. ANNUAL REPORT

A. As indicated in the Pollution Prevention Team, Daniel W. Ross (General Manager) has overall responsibility for the SWPP Monitoring Program implementation and submittal of the SARWQCB Storm Water Annual report to the Executive Officer of the Regional Water Board by July 1 of each year.

B. The SARWQCB Storm Water Annual Report shall be signed and certified in accordance with the Permit, and shall include the following components, as delineated in the SARWQCB Storm Water Annual Report:

1. A summary of visual observations and sampling.
2. Visual observation and sample collection records.
3. An evaluation of the visual observation and sampling and analysis results.
4. Laboratory reports.
5. The "Annual Comprehensive Site Compliance Evaluation Report", (see SWPP Plan section IX).
6. An explanation of why any activities required by the Permit were not implemented, if any.
7. The method used and detection limits of each analytical parameter with analytical results. If less than the method detection limit, report as "less than the method detection limit".

IX. RECORD KEEPING

A. Records of all storm water monitoring information and copies of all reports, (including the SARWQCB Storm Water Annual Report), required by the Permit shall be retained for a period of at least five (5) years.

B. Records shall include:

1. The date, place, time of site inspections, sampling, visual observations, and/or measurements, (SARWQCB Storm Water Annual Report, Forms 2,3 and 4).
2. The individual (s) who performed the site inspections, sampling, visual observations, and / or measurements, (SARWQCB Storm Water Annual Report, Forms 2,3 and 4).
3. The date and approximate time of analyses.
4. The individual (s) who performed the analyses.
5. Analytical results, method detection limits, and the analytical techniques or methods used.
6. Quality Assurance/Quality Control records and results.
7. Non-storm water discharge inspections, visual observations, and storm water discharge visual observation records, (SARWQCB Storm Water Annual Report, Forms 2 and 3).

X. CERTIFICATION

I certify under penalty of law that this document and all attachments were prepared under my direction or supervision in accordance with a system designed to assure that qualified personnel properly gather and evaluate the information submitted. Based on my inquiry of the person or persons who manage the system, or those persons directly responsible for gathering the information; the information submitted is, to the best of my knowledge and belief, true, accurate, and complete. I am aware that there are significant penalties for submitting false information, including the possibility of fine and imprisonment for knowingly and willfully violating or falsifying the previsions of the SWPP Plan or the SWPP Monitoring Program.

Daniel W. Ross

Daniel W. Ross
Reliant Energy Etiwanda Inc.
General Manager

RELIANT ENERGY ETIWANDA

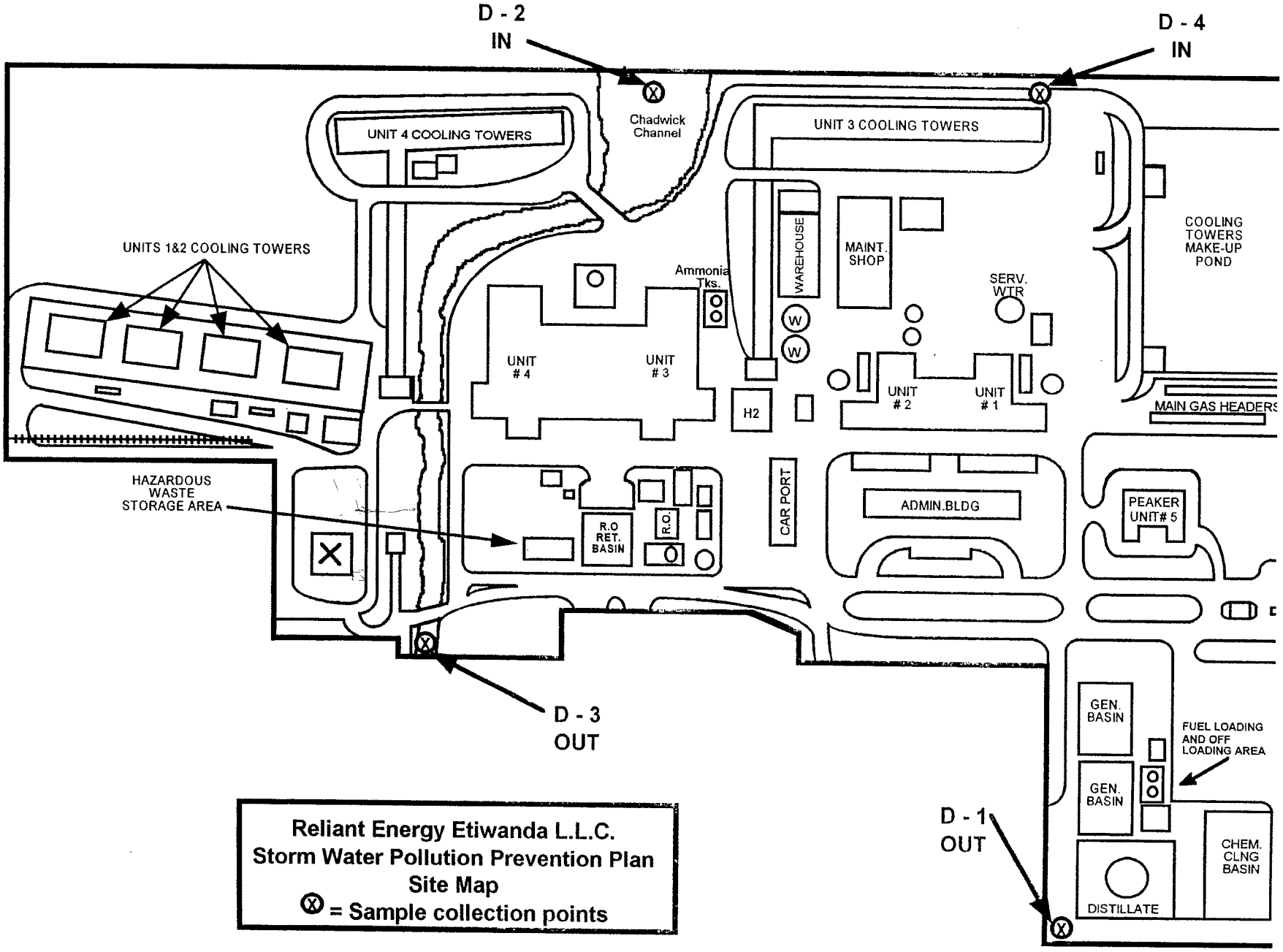

Reliant Energy Etiwanda L.L.C.
Storm Water Pollution Prevention Plan
Site Map
⊗ = Sample collection points

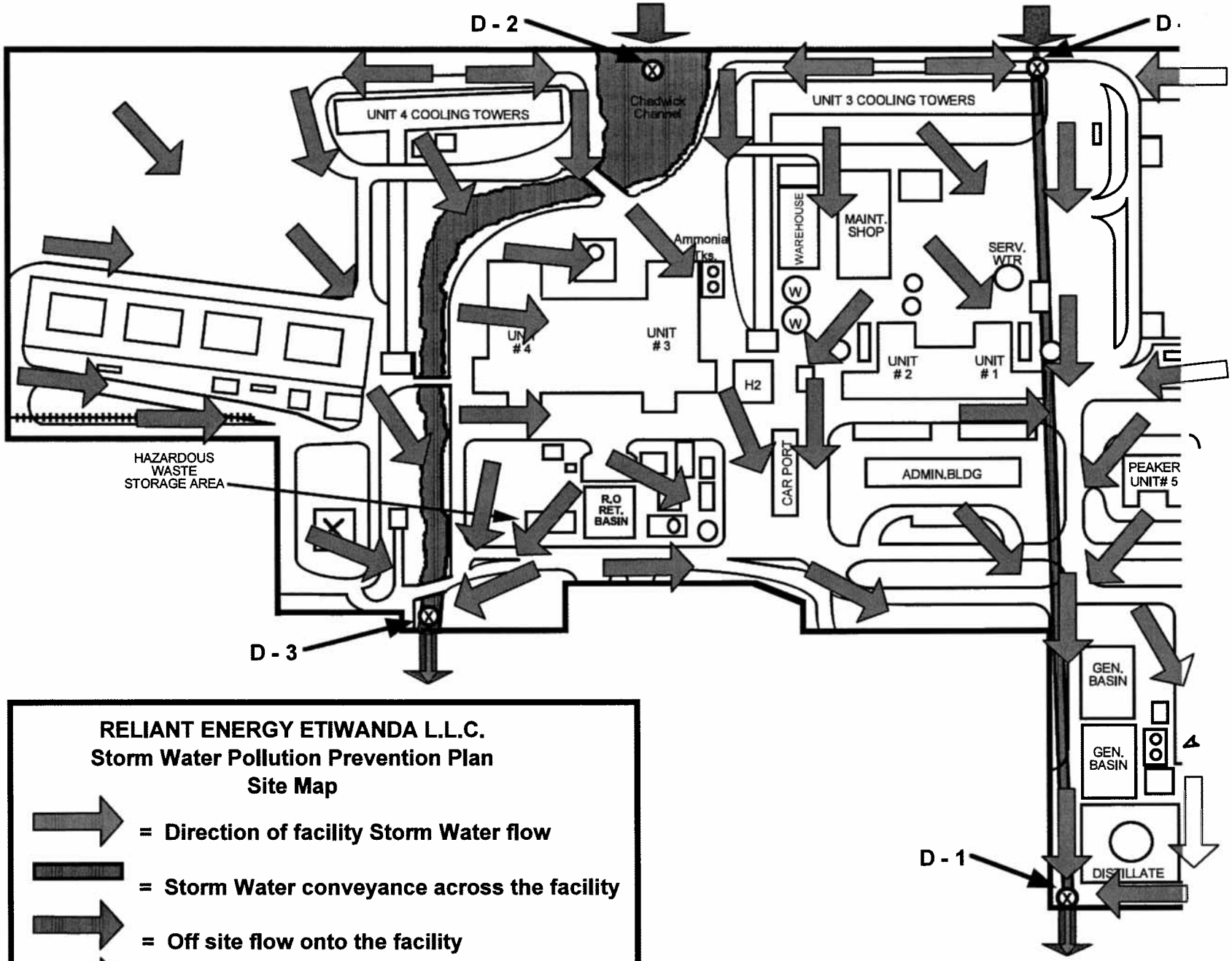

RELIANT ENERGY ETIWANDA L.L.C.
Storm Water Pollution Prevention Plan
Site Map

= Direction of facility Storm Water flow

= Storm Water conveyance across the facility

= Off site flow onto the facility

= Mixed Storm Water flow off the facility

STORM WATER POLLUTION PREVENTION PLAN

RELIANT ENERGY ETIWANDA Inc.
8996 Etiwanda Avenue
Rancho Cucamonga, CA 91739

Pollution Prevention Team

Daniel W. Ross, Reliant Energy Etiwanda Inc., General Manager
Louis Lee, Reliant Energy Etiwanda Inc., Operations Manager

Updated March 26, 2004

STORM WATER POLLUTION PREVENTION PLAN

I. OBJECTIVE

The Storm Water Pollution Prevention, (SWPP), Plan has the following major objectives:

1. To identify and evaluate sources of pollutants associated with industrial activities that may affect the quality of storm water discharges and authorized non-storm water discharges from the facility.

2. To identify and implement site-specific Best Management practices (BMPs) to reduce or prevent pollutants associated with industrial activities in storm water discharges and authorized non-storm water discharges.

   BMPs may include a variety of pollution prevention measures or other low-cost and pollution control measures. They are generally categorized as non-structural BMPs; (activity schedules, prohibitions of practices, maintenance procedures, and other low-cost measures) and as structural BMPs; (treatment measures, run-off controls, overhead coverage).

II. POLLUTION PREVENTION TEAM

This facility is Reliant Energy Etiwanda, Inc., a Fossil Fuel Electrical Generating Facility. The Pollution Prevention Team for the Reliant Energy Etiwanda, Inc. and their responsibilities are:

1. Daniel W. Ross (General Manager) has overall responsibility for all Stormwater Compliance issues and is the Responsible Officer for Reliant Energy Etiwanda Inc.

2. Louis Lee has overall responsibility for conducting all monitoring program actions associated with the Stormwater Pollution Prevention Plan and Monitoring Program, and revisions to the plans.

III. EXISTING FACILITY PLANS

The SWPP Plan incorporates the following existing facility plans by reference:

1. Spill Prevention, Control and Countermeasure (SPCC) Plan.

2. County Business Plan, (Hazardous materials Business Plan and Hazardous materials / Chemical Inventory).

IV. SITE MAPS

The SWPP Plan and Monitoring Program facility site maps identify:

1. The facility boundary, the outline of all storm water discharge areas within the facility boundary, the direction of flow of each drainage area, and areas of the facility that are impacted by run-on from neighbors to the North of the facility. There is an on-site surface water body, which is used for operation systems. The facility has no soil erosion problem.
2. The locations of storm water collection and conveyance systems, including any structural control measures, associated points of discharge, and direction of flow.
3. Areas of industrial activity that are directly exposed to precipitation, which include storage areas, storage tanks, fueling areas, vehicle and equipment storage areas, equipment and salvage lay down areas.
4. There are no locations where significant spills or leaks have occurred.

V. LIST OF SIGNIFICANT MATERIALS

A list of significant materials handled or stored on site is contained within the facility's County Business Plan.

VI. DESCRIPTION OF POTENTIAL POLLUTANT SOURCES

FACILITY'S INDUSTRIAL ACTIVITIES

1. Industrial Processes

This facility consists of four Conventional Steam-Electric Generating units and one Jet Engine type "PEAKING" Electric Generating Unit. Natural gas is the fuel for all five of the Generating units.

Transformers used on the station contain Dielectric Oil. Lubricating Oil is used for equipment bearings and hydraulic control on all five of the Generating Units.

Ammonium Hydroxide, Hydrazine, Sodium Hydroxide and Sodium Phosphate are used for Boiler Water treatment. Sodium Nitrate is used as a corrosion inhibitor in the equipment Cooling Water System. Sodium Hypochlorite is used to treat the Circulating Water System for algae control. Commercial products referred to as Calgon PCL-4025 and Calgon 361 are used as corrosion inhibitors in the Circulating Water System. Sulfuric Acid is used for pH control, maintaining the Circulating Water System pH from 7.0 to 8.0. Ammonium Hydroxide at 19% concentration is used for air quality emissions control.

Gasoline is used for fueling station vehicles and equipment. Various solvents, paints and lubricants are used in the maintenance and servicing of equipment.

All industrial processes that involve potential pollutants are either enclosed within covered structures or surrounded by secondary containment structures.

2. Material Handling and Storage Areas

   Oil Storage and Receiving procedures and Oil Spill Prevention and Response procedures are addressed in the Facility's SPCC Plan.

   Sodium Hypochlorite, Sulfuric Acid, Lube Oils and Ammonium Hydroxide 19% are received in Bulk Form by tank truck, and are stored in areas adjacent to their point of use. All storage areas are provided with secondary containment. All other materials are received in either drums or pails, are unloaded at the warehouse, and then moved to various areas within the plant where they are dispensed.
   Hazardous Waste is primarily stored in D.O.T. approved Drums within the Hazardous Waste Accumulation Area.

3. Dust and Particulate Generating Activities

   Emission particulate matter from the boiler combustion process is regulated by the facility's Air Quality Permit and is minimal. On occasion, construction activities may occur which generates dust. In this situation, an Air Quality Permit is obtained for the project, and dust suppression methods such as watering by truck are utilized to reduce fugitive dust.

4. Significant Spills and Leaks

   There has not been a spill or a leak of a reportable quantity, (RQ), of oil or hazardous substance into the storm water discharge since the reporting date specified in the SWPPP regulation, (April 17, 1994.)

5. Non-Storm Water Discharges

   The following non-storm discharges are authorized under the State General Permit:

Potable water sources	Irrigation drainage
Landscape watering	Atmospheric condensates, (i.e. air conditioning)

   There are no unauthorized non-storm water discharges at the facility.

6. Soil Erosion

   The contour of the facility is relatively flat. Soil erosion entering the facility's storm drain system due to industrial activity is not expected to be a problem.

VII. ASSESSMENT OF POTENTIAL POLLUTANT SOURCES

Existing storm water pollution prevention measures have been successful in addressing and eliminating likely sources of pollutants in storm water discharge. Review of storm water discharge monitoring sample analyses and observations have not revealed any pollutant problems. Therefore, no pollutants are expected to be present in storm water discharge in significant quantities.

VIII. STORM WATER BEST MANAGEMENT PRACTICES

(See Table "A" Industrial Areas, Potential Pollutant Sources, and BMPs)

A. NON-STRUCTURAL BMPs

1. Good Housekeeping

   Operating personnel have been assigned housekeeping locations and are responsible for assuring that these areas are kept clean. Clean up is a component of every maintenance project and an inspection is made at the completion of each project to assure that the area is clean.

2. Preventive Maintenance

   Inspections of retention basins, drainage sumps, and chemical/oil handling and storage areas are performed daily. Maintenance of all storm water conveyance devices is performed as needed based upon the results of the daily inspections.

3. Spill Response

   All areas containing significant materials are secondarily contained as required by the station's SPCC Plan.

   Station personnel clean up minor spills promptly. The station maintains a current list of organizations that can supply manpower and materials required for a response to a major spill.

4. Employee Training

   Periodic training sessions, both formal and informal, are held to instruct personnel in the proper operation and maintenance of equipment to prevent the discharge of hazardous materials into storm water discharges. Operator training on spill prevention, the SPCC plan, and the SWPPP is held annually. Known spill events or failures and precautionary measures are discussed.

5. Waste Handling/Recycling

   All hazardous wastes are transported to a licensed disposal or recycling facility.

6. Record Keeping and Internal Reporting

   Daily facility inspections are conducted and recorded by operating personnel, (Daily RCRA/ CWA Inspection Reports). Any irregularities observed are noted on the inspection form and corrected. The daily inspection reports are maintained for five (5) years in the Environmental Office.

7. Erosion Control and Site Stabilization

   Erosion and sediment control methods including berms, culverts, and drains are utilized to direct storm water and prevent erosion.

8. Inspections

   As daily inspections are conducted, maintenance orders are issued for deficiencies and leaks. Additionally, a visual inspection is conducted and recorded each quarter to observe all drainage areas within the facility for the presence of unauthorized non-storm water discharges.

9. Quality Assurance

   a. The General Manager has overall responsibility for implementation of the provisions of the SWPPP.
   b. The Operations Manager is responsible for conducting all monitoring program activities and revisions to the SWPPP.

B. STRUCTURAL BMPs

1. Overhead Coverage

   All chemical, oil drums and pails are stored inside the steam boiler structure and the peaking unit structure.

2. Retention Basins

   Many of the facility's potential sources are located within the power block structures. All the drains within the power block structures are routed to the station's retention basin. The Retention Basin Pumps discharge into an Industrial Sewer System.

3. Control Devices

   All potential pollutant sources are either sheltered from storm water or are surrounded by secondary containment, which prevents storm water run-off from coming into contact with the pollutant source.

4. Secondary Containment Structures

   All bulk oil and bulk hazardous material tanks are surrounded by secondary containment structures.

IX. ANNUAL COMPREHENSIVE SITE COMPLIANCE EVALUATION

A. The facility shall conduct one comprehensive site compliance evaluation with the Annual Report, as indicated in the SWPP Monitoring Program, each reporting year, (July 1- June 30), within 8-16 months of each other. This evaluation shall be completed by April 30 each year.

B. The evaluation shall include:

1. A review of all visual observations, inspection records, and sampling and analysis results.

2. A visual inspection of all potential pollutant sources for evidence of, or the potential for, pollutants entering the drainage system.

3. A review and evaluation of all BMPs to determine whether the BMPs are adequate, properly implemented and maintained, or whether additional BMPs are needed.

4. An evaluation report that includes:

   a) Identification of personnel performing the evaluation

   b) The date (s) of the evaluation

   c) Necessary SWPP Plan revisions

   d) Schedule for implementing SWPP Plan revisions

   e) Any incidents of non-compliance and the corrective actions taken

   f) A certification that the facility operator is in compliance with the State Water Board NPDES General Permit, Water Quality Order No. 97-03-DWQ

C. The SWPP Plan shall be revised, as appropriate, and the revisions implemented within 90 days of the evaluation.

X. SWPPP GENERAL REQUIREMENTS

A. A copy of the SWPP Plan shall be retained on site and made available upon request of a representative of the Regional Water Board. The station shall also submit a SWPP Plan revision and implementation schedule if the Regional Water Board determines that the SWPP Plan does not meet the minimum requirements.

B. The SWPP Plan must be revised prior to changes in industrial activities that may significantly change the quantities of pollutants in storm water discharges, cause a new area of industrial activity at the facility to be exposed to storm water, or introduce a new pollutant source at the facility.

C. All monitoring information, copies of all reports required by the State Water Board NPDES General Permit, Water Quality Order No. 97-03-DWQ, and records of all data used to complete the Notice Of Intent, (NOI), shall be retained in the Station Environmental Office for five (5) years from date of measurement, report or monitoring activity.

XI. CERTIFICATION

I certify under penalty of law that this document and all attachments were prepared under my direction or supervision in accordance with a system designed to assure that qualified personnel properly gather and evaluate the information submitted. Based on my inquiry of the person or persons who manage the system, or those persons directly responsible for gathering the information; the information submitted is, to the best of my knowledge and belief, true, accurate, and complete. I am aware that there are significant penalties for submitting false information, including the possibility of fine and imprisonment for knowingly and willfully violating or falsifying the provisions of the SWPP Plan or the SWPP Monitoring Program.

Daniel W. Ross

Daniel W. Ross
Reliant Energy Etiwanda Inc.
General Manager

State of California
State Water Resources Control Board

NOTICE OF INTENT

TO COMPLY WITH THE TERMS OF THE
GENERAL PERMIT TO DISCHARGE STORM WATER
ASSOCIATED WITH INDUSTRIAL ACTIVITY (WQ ORDER No. 97-03-DWQ)
(Excluding Construction Activities)

SECTION I. NOI STATUS (please check only one box)

A. (X) New Permittee B. ( ) Change of Information WDID #

SECTION II. FACILITY OPERATOR INFORMATION (See instructions)

A. NAME: MOUNTAIN VISTA POWER GENER LLC Phone: 909-899-7253

Mailing Address: 8996 ETIWANDA AVE

City: ETIWANDA State: CA Zip Code: 91739

Contact Person: DANIEL ROSS

B. OPERATOR TYPE:
(check one) 1.(X) Private 2.( )City 3.( )County 4.( )State 5.( )Federal 6.( )Special District 7.( )Gov. Combo

TION III. FACILITY SITE INFORMATION

A. FACILITY NAME MOUNTAIN VISTA POWER GENERATION Phone: 909-899-7253

Facility Location: 8996 ETIWANDA AVE County: SAN BERNARDINO

City: ETIWANDA State: CA Zip Code: 91739

B. MAILING ADDRESS: 8996 ETIWANDA AVE

City: ETIWANDA State: CA Zip Code: 91739

Contact Person: PAUL LACROIX

C. FACILITY INFORMATION (check one)
Total Size of Site: 64 Acres (X) Sq. Ft. ( )
Percent of Site Impervious *(including rooftops)* 60 %

D. SIC CODE(S) OF REGULATED ACTIVITY: E. REGULATED ACTIVITY *(describe each SIC code)*:

1. 4911 ELECTRIC POWER GENERATION
2.
3.

SECTION IV. ADDRESS FOR CORRESPONDENCE

( ) Facility Operator Address (X) Facility Mailing Address ( ) Both

SECTION V. BILLING ADDRESS INFORMATION

SEND BILL TO: [X] Facility Operator (Section II) [ ] Facility (Section III) [ ] Other (enter information below)

Name: | Phone:

Mailing Address:

City: | State: | Zip Code:

Contact Person:

SECTION VI. RECEIVING WATER INFORMATION

Your facility's storm water discharges flow (check one) [ ] Directly OR [X] Indirectly to waters of the United States.

Name of receiving water: SANTA ANA RIVER
(river, lake, stream, ocean, etc.)

SECTION VII. IMPLEMENTATION OF PERMIT REQUIREMENTS

A. STORM WATER POLLUTION PREVENTION PLAN (SWPPP) (check one)
[ ] A SWPPP has been prepared for this facility and is available for review.
[X] A SWPPP will be prepared and ready for review by (enter date): 05/01/98. FACILITY WILL OPERATE UNDER CURRENT SWPPP UNTIL REVISED PLAN PREPARED

B. MONITORING PROGRAM (check one)
[ ] A Monitoring Program has been prepared for this facility and is available for review.
[X] A Monitoring Program will be prepared and ready for review by (enter date): 05/01/98. FACILITY WILL OPERATE UNDER CURRENT SWPPP UNTIL REVISED PLAN PREPARED

C. PERMIT COMPLIANCE RESPONSIBILITY
Has a person been assigned responsibility for:
1. Inspecting the facility throughout the year to identify any potential pollution problems? ..... X YES ___ NO
2. Collecting storm water samples and having them analyzed? ..... X YES ___ NO
3. Preparing and submitting an annual report by July 1 of each year? ..... X YES ___ NO
4. Eliminating discharges other than storm water (such as equipment or vehicle wash-water) into the storm drain? ..... X YES ___ NO

SECTION VIII. REGULATORY STATUS (Go to Section IX if not applicable)

A. WASTE DISCHARGE REQUIREMENT ORDER NUMBER: 10358 B. NPDES PERMIT CA:

SECTION IX. SITE MAP

I HAVE ENCLOSED A SITE MAP YES[X] A new NOI submitted without a site map will be rejected.

SECTION X. CERTIFICATION

"I certify under penalty of law that this document and all attachments were prepared under my direction and supervision in accordance with a system designed to assure that qualified personnel properly gather and evaluate the information submitted. Based on my inquiry of the person or persons who manage the system, or those persons directly responsible for gathering the information, the information submitted is, to the best of my knowledge and belief, true, accurate and complete. I am aware that there are significant penalties for submitting false information, including the possibility of fine and imprisonment. In addition, I certify that the provisions of the permit, including the development and implementation of a Storm Water Pollution Prevention Plan and a Monitoring Program Plan, will be complied with."

Printed Name: R.W. LAWHN

Signature: RW Lawhn Date 3/30/98

Title: MANAGER-WATER & ECOLOGICAL RESOURCES, HOUSTON INDUSTRIES, INC.

HOUSTON INDUSTRIES POWER GENERATION, INC.
P.O. Box 286 Houston, Texas 77001-0286

32-115
1110

Check Number	Date	Pay Exactly
000531	03/17/98	*********$500.00

PAY Five hundred and 00/100 Dollars

TO THE ORDER OF

State WRCB
P. O. Box 1977

Sacramento CA 95812-1977

CHASE BANK OF TEXAS, N.A.
HOUSTON, TEXAS

AUTHORIZED SIGNATURE

VOID WITHOUT SIGNATURE
VOID AFTER NINETY DAYS

THE BACK OF THIS DOCUMENT CONTAINS A HOUSTON INDUSTRIES INC. LOGO.

⑈000531⑈ ⑆111001150⑆ 0010055428 7⑈

Laws, Regulations, Guidance, and Scientific Documents

State, Tribal, and Local Initiatives

Landowners

Water Quality and 401 Certification

Monitoring and Assessment

Wetlands and Watersheds

Restoration

Education

In Your Area

Clean Water Act, Section 401 Certification

(a) Compliance with applicable requirements; application; procedures; license suspension

(1) Any applicant for a Federal license or permit to conduct any activity including, but not limited to, the construction or operation of facilities, which may result in any discharge into the navigable waters, shall provide the licensing or permitting agency a certification from the State in which the discharge originates or will originate, or, if appropriate, from the interstate water pollution control agency having jurisdiction over the navigable waters at the point where the discharge originates or will originate, that any such discharge will comply with the applicable provisions of sections 301, 302, 303, 306, and 307 of this title. In the case of any such activity for which there is not an applicable effluent limitation or other limitation under sections 301(b) and 302 of this title, and there is not an applicable standard under sections 306 and 307 of this title, the State shall so certify, except that any such certification shall not be deemed to satisfy section 511(c) of this title. Such State or interstate agency shall establish procedures for public notice in the case of all applications for certification by it and, to the extent it deems appropriate, procedures for public hearings in connection with specific applications. In any case where a State or interstate agency has no authority to give such a certification, such certification shall be from the Administrator. If the State, interstate agency, or Administrator, as the case may be, fails or refuses to act on a request for certification, within a reasonable period of time (which shall not exceed one year) after receipt of such request, the certification requirements of this subsection shall be waived with respect to such Federal application. No license or permit shall be granted until the certification required by this section has been obtained or has been waived as provided in the preceding sentence. No license or permit shall be granted if certification has been denied by the State, interstate agency, or the Administrator, as the case may be.

(2) Upon receipt of such application and certification the licensing or permitting agency shall immediately notify the Administrator of such application and certification. Whenever such a discharge may affect, as determined by the Administrator, the quality of the waters of any other State, the Administrator within thirty days of the date of notice of application for such Federal license or permit shall so notify such other State, the licensing or permitting agency, and the applicant. If, within sixty days after receipt of such notification, such other State determines that such discharge will affect the

applicable effluent limitations and other limitations, under section 301 or 302 of this title, standard of performance under section 306 of this title, or prohibition, effluent standard, or pretreatment standard under section 307 of this title, and with any other appropriate requirement of State law set forth in such certification, and shall become acondition on any Federal license or permit subject to the provisions of this section.

Last updated on Wednesday, February 22nd, 2006
URL: http://www.epa.gov/owow/wetlands/regs/sec401.html

SECTION 404 OF THE CLEAN WATER ACT

A. The Secretary may issue permits, after notice and opportunity for public hearings for the discharge of dredged or fill material into the navigable waters at specified disposal sites. Not later than the fifteenth day after the date an applicant submits all the information required to complete an application for a permit under this subsection, the Secretary shall publish the notice required by this subsection.

B. Subject to subsection (c) of this section, each such disposal site shall be specified for each such permit by the Secretary

   1. through the application of guidelines developed by the Administrator, in conjunction with the Secretary, which guidelines shall be based upon criteria comparable to the criteria applicable to the territorial seas, the contiguous zone, and the ocean under section 403(c), and

   2. in any case where such guidelines under clause (1) alone would prohibit the specification of a site, through the application additionally of the economic impact of the site on navigation and anchorage.

C. The Administrator is authorized to prohibit the specification (including the withdrawal of specification) of any defined area as a disposal site, and he is authorized to deny or restrict the use of any defined area for specification (including the withdrawal of specification) as a disposal site, whenever he determines, after notice and opportunity for public hearings, that the discharge of such materials into such area will have an unacceptable adverse effect on municipal water supplies, shellfish beds and fishery areas (including spawning and breeding areas), wildlife, or recreational areas. Before making such determination, the Administrator shall consult with the Secretary. The Administrator shall set forth in writing and make public his findings and his reasons for making any determination under this subsection.

D. The term "Secretary" as used in this section means the Secretary of the Army, acting through the Chief of Engineers.

E.

   1. In carrying out his functions relating to the discharge of dredged or fill material under this section, the Secretary may, after notice of opportunity for public hearing, issue general permits on a State, regional, or nationwide basis for any category of activities involving discharges of dredged or fill material if the Secretary determines that the activities in such category are similar in nature, will cause only minimal adverse environmental effects when performed separately, and will have only minimal cumulative adverse effects on the environment. Any general permit issued under this subsection shall

      a. be based on the guidelines described in subsection (b)(l) of this section, and
      b. set forth the requirements and standards which shall apply to any activity authorized by such general permit.

   2. No general permit issued under this subsection shall be for a period of more than five years

after the date of its issuance and such general permit may be revoked or modified by the Secretary if, after opportunity for public hearing, the Secretary determines that the activities authorized by such general permit have an adverse impact on the environment or such activities are more appropriately authorized by individual permits.

F.

1. Except as provided in paragraph (2) of this subsection, the discharge of dredge or fill material -

    a. from normal farming, silviculture, and ranching activities such as plowing, seeding, cultivating, minor drainage, harvesting for the production of food, fiber, and forest products, or upland soil and water conservation practices;
    b. for the purpose of maintenance, including emergency reconstruction of recently damaged parts, of currently serviceable structures such as dikes, dams, levees, groins, riprap, breakwaters, causeways, and bridge abutments or approaches, and transportation structures;
    c. for the purpose of construction or maintenance of farm or stock ponds or irrigation ditches, or the maintenance of drainage ditches;
    d. for the purpose of construction of temporary sedimentation basins on a construction site which does not include placement of fill material into the navigable waters;
    e. for the purpose of construction or maintenance or farm roads or forest roads, or temporary roads for moving mining equipment, where such roads are constructed and maintained, in accordance with best management practices, to assure that flow and circulation patterns and chemical and biological characteristics of the navigable waters are not impaired, that the reach of the navigable waters is not reduced, and that any adverse effect on the aquatic environment will be otherwise minimized;
    f. resulting from any activity with respect to which a State has an approved program, under section 208(b)(4) which meets the requirements of subparagraphs (B) and (C) of such section, is not prohibited by or otherwise subject to regulation under this section or section 301(a) or 402 of this Act (except for effluent standards or prohibitions under section 307).

2. Any discharge of dredged or fill material into the navigable waters incidental to any activity having as its purpose bringing an area of the navigable waters into a use to which it was not previously subject, where the flow or circulation of navigable waters may be impaired or the reach of such waters be reduced, shall be required to have a permit under this section.

G.

1. The Governor of any State desiring to administer its own individual and general permit program for the discharge of dredged or fill material into the navigable waters (other than those waters which are presently used, or are susceptible to use in their natural condition or by reasonable improvement as a means to transport interstate or foreign commerce shoreward to their ordinary high water mark, including all waters which are subject to the ebb and flow of the tide shoreward to their mean high water mark, or mean higher high water mark on the west coast, including wetlands adjacent thereto), within its jurisdiction may submit to the Administrator a full and complete description of the program it proposes to establish and administer under State law or under an interstate compact. In addition, such State shall submit a statement from the attorney general (or the attorney for those State agencies which have independent legal counsel), or from the chief legal officer in the case of an interstate agency, that the laws of such State, or the interstate compact, as the case may be, provide adequate authority to carry out the described program.

2. Not later than the tenth day after the date of the receipt of the program and statement submitted by any State under paragraph (1) of this subsection, the Administrator shall provide copies of such program and statement to the Secretary and the Secretary of the Interior, acting through the Director of the United States Fish and Wildlife Service.

3. No later than the ninetieth day after the date of the receipt by the Administrator of the program and statement submitted by any State, under paragraph (1) of this subsection, the Secretary and the Secretary of the Interior, acting through the Director of the United States Fish and Wildlife Service, shall submit any comments with respect to such program and statement to the Administrator in writing.

H.

1. Not later than the one-hundred-twentieth day after the date of the receipt by the Administrator of a program and statement submitted by any State under paragraph (1) of this subsection, the Administrator shall determine, taking into account any comments submitted by the Secretary and the Secretary of the Interior, acting through the Director of the United States Fish and Wildlife Service, pursuant to subsection (g) of this section, whether such State has the following authority with respect to the issuance of permits pursuant to such program:

   a. To issue permits which -

      i. apply, and assure compliance with, any applicable requirements of this section, including, but not limited to, the guidelines established under subsection (b)(l) of this section, and sections 307 and 403 of this Act;
      ii. are for fixed terms not exceeding five years; and
      iii. can be terminated or modified for cause including, but not limited to, the following:

         I. violation of any condition of the permit;
         II. obtaining a permit by misrepresentation, or failure to disclose fully all relevant facts;
         III. change in any condition that requires either a temporary or permanent reduction or elimination of the permitted discharge.

   b. To issue permits which apply, and assure compliance with, all applicable requirements of section 308 of this Act, or to inspect, monitor, enter, and require reports to at least the same extent as required in section 308 of this Act.
   c. To assure that the public, and any other State the waters of which may be affected, receive notice of each application for a permit and to provide an opportunity for public hearing before a ruling on each such application.
   d. To assure that the Administrator receives notice of each application (including a copy thereof) for a permit.
   e. To assure that any State (other than the permitting State), whose waters may be affected by the issuance of a permit may submit written recommendation to the permitting State (and the Administrator) with respect to any permit application and, if any part of such written recommendations are not accepted by the permitting State, that the permitting State will notify such affected State (and the Administrator) in writing of its failure to so accept such recommendations together with its reasons for so doing.
   f. To assure that no permit will be issued if, in the judgement of the Secretary, after

consultation with the Secretary of the department in which the Coast Guard is operating, anchorage and navigation of any of the navigable waters would be substantially impaired thereby.

g. To abate violations of the permit or the permit program, including civil and criminal penalties and other ways and means of enforcement.
h. To assure continued coordination with Federal and Federal-State water-related planning and review processes.

2. If, with respect to a State program submitted under subsection (g)(l) of this section, the Administrator determines that such State -

   A. has the authority set forth in paragraph (1) of this subsection, the Administrator shall approve the program and so notify (i) such State, and (ii) the Secretary, who upon subsequent notification from such State that it is administering such program, shall suspend the issuance of permits under subsections (a) and (e) of this section for activities with respect to which a permit may be issued pursuant to such State program; or
   B. does not have the authority set forth in paragraph (1) of this subsection, the Administrator shall so notify such State, which notification shall also describe the revisions or modifications necessary so that such State may resubmit such program for a determination by the Administrator under this subsection.

3. If the Administrator fails to make a determination with respect to any program submitted by a State under subsection (g)(l) of this section within one-hundred-twenty days after the date of the receipt of such program, such program shall be deemed approved pursuant to paragraph (2)(A) of this subsection and the Administrator shall so notify such State and the Secretary who, upon subsequent notification from such State that it is administering such program, shall suspend the issuance of permits under subsection (a) and (e) of this section for activities with respect to which a permit may be issued by such State.

4. After the Secretary receives notification from the Administrator under paragraph (2) or (3) of this subsection that a State permit program has been approved, the Secretary shall transfer any applications for permits pending before the Secretary for activities with respect to which a permit may be issued pursuant to such State program to such State for appropriate action.

5. Upon notification from a State with a permit program approved under this subsection that such State intends to administer and enforce the terms and conditions of a general permit issued by the Secretary under subsection (e) of this section with respect to activities in such State to which such general permit applies, the Secretary shall suspend the administration and enforcement of such general permit with respect to such activities.

I. Whenever the Administrator determines after public hearing that a State is not administering a program approved under section (h)(2)(A) of this section, in accordance with this section, including, but not limited to, the guidelines established under subsection (b)(l) of this section, the Administrator shall so notify the State, and, if appropriate corrective action is not taken within a reasonable time, not to exceed ninety days after the date of the receipt of such notification, the Administrator shall:

   1. withdraw approval of such program until the Administrator determines such corrective

action has been taken, and

2. notify the Secretary that the Secretary shall resume the programs for the issuance of permits under subsection (a) and (e) of this section for activities with respect to which the State was issuing permits and that such authority of the Secretary shall continue in effect until such time as the Administrator makes the determination described in clause (1) of this subsection and such State again has an approved program.

J. Each State which is administering a permit program pursuant to this section shall transmit to the Administrator

1. a copy of each permit application received by such State and provide notice to the Administrator of every action related to the consideration of such permit application, including each permit proposed to be issued by such State, and

2. a copy of each proposed general permit which such State intends to issue. Not later than the tenth day after the date of the receipt of such permit application or such proposed general permit, the Administrator shall provide copies of such permit application or such proposed general permit to the Secretary and the Secretary of the Interior, acting through the Director of the United States Fish and Wildlife Service. If the Administrator intends to provide written comments to such State with respect to such permit application or such proposed general permit, he shall so notify such State not later than the thirtieth day after the date of the receipt of such application or such proposed general permit and provide such written comments to such State, after consideration of any comments made in writing with respect to such application or such proposed general permit by the Secretary and the Secretary of the Interior, acting through the Director of the United States Fish and Wildlife Service, not later than the ninetieth day after the date of such receipt. If such State is so notified by the Administrator, it shall not issue the proposed permit until after the receipt of such comments from the Administrator, or after such ninetieth day, whichever first occurs. Such State shall not issue such proposed permit after such ninetieth day if it has received such written comments in which the Administrator objects (A) to the issuance of such proposed permit and such proposed permit is one that has been submitted to the Administrator pursuant to subsection (h)(l)(E), or (B) to the issuance of such proposed permit as being outside the requirements of this section, including, but not limited to, the guidelines developed under subsection (b)(l) of this section unless it modified such proposed permit in accordance with such comments. Whenever the Administrator objects to the issuance of a permit under the preceding sentence such written objection shall contain a statement of the reasons for such objection and the conditions which such permit would include if it were issued by the Administrator. In any case where the Administrator objects to the issuance of a permit, on request of the State, a public hearing shall be held by the Administrator on such objection. If the State does not resubmit such permit revised to meet such objection within 30 days after completion of the hearing or, if no hearing is requested within 90 days after the date of such objection, the Secretary may issue the permit pursuant to subsection (a) or (e) of this section, as the cause may be, for such source in accordance with the guidelines and requirements of this Act.

K. In accordance with guidelines promulgated pursuant to subsection (i)(2) of section 304 of this Act, the Administrator is authorized to waive the requirements of subsection (j) of this section at the time of the approval of a program pursuant to subsection (h)(2)(A) of this section or any category (including any class, type, or size within such category) of discharge within the State submitting such program.

L. The Administrator shall promulgate regulations establishing categories of discharges which he determines shall not be subject to the requirements of subsection (j) of this section in any State with a program approved pursuant to subsection (h)(2)(A) of this section. The Administrator may distinguish among classes, types, and sizes within any category of discharges.

M. Not later than the ninetieth day after the date on which the Secretary notifies the Secretary of the Interior, acting through the Director of the United States Fish and Wildlife Service that

1. an application for a permit under subsection (a) of this section has been received by the Secretary, or

2. the Secretary proposes to issue a general permit under subsection (e) of this section, the Secretary of the Interior, acting through the Director of the United States Fish and Wildlife Service, shall submit any comments with respect to such application or such proposed general permit in writing to the Secretary.

N. Nothing in this section shall be construed to limit the authority of the Administrator to take action pursuant to section 309 of this Act.

O. A copy of each permit application and each permit issued under this section shall be available to the public. Such permit application or portion thereof, shall further be available on request for the purpose of reproduction.

P. Compliance with a permit issued pursuant to this section, including any activity carried out pursuant to a general permit issued under this section, shall be deemed compliance, for purposes of sections 309 and 505, with sections 301, 307, and 403.

Q. Not later than the one-hundred-eightieth day after the date of enactment of this subsection, the Secretary shall enter into agreements with the Administrator, the Secretaries of the Departments of Agriculture, Commerce, Interior, and Transportation, and the heads of other appropriate Federal agencies to minimize, to the maximum extent practicable, duplication, needless paperwork, and delays in the issuance of permits under this section. Such agreements shall be developed to assure that, to the maximum extent practicable, a decision with respect to an application for a permit under subsection (a) of this section will be made not later than the ninetieth day after the date the notice of such application is published under subsection (a) of this section.

R. The discharge of dredged or fill material as part of the construction of a Federal project specifically authorized by Congress, whether prior to or on or after the date of enactment of his subsection, is not prohibited by or otherwise subject to regulation under this section, or a State program approved under this section, or section 301(a) or 402 of the Act (except for effluent standards or prohibitions under section 307), if information on the effects of such discharge, including consideration of the guidelines developed under subsection (b)(l) of this section, is included in an environmental impact statement for such project pursuant to the National Environmental Policy Act of 1969 and such environmental impact statement has been submitted to Congress before the actual discharge of dredged or fill material in connection with the construction of such project and prior to either authorization of such project or an appropriation of funds for each construction.

S.

1. Whenever on the basis of any information available to him the Secretary finds that any

person is in violation of any condition or limitation set forth in a permit issued by the Secretary under this section, the Secretary shall issue an order requiring such persons to comply with such condition or limitation, or the Secretary shall bring a civil action in accordance with paragraph (3) of this subsection.

2. A copy of any order issued under this subsection shall be sent immediately by the Secretary to the State in which the violation occurs and other affected States. Any order issued under this subsection shall be by personal service and shall state with reasonable specificity the nature of the violation, specify a time for compliance, not to exceed thirty days, which the Secretary determines is reasonable, taking into account the seriousness of the violation and any good faith efforts to comply with applicable requirements. In any case in which an order under this subsection is issued to a corporation, a copy of such order shall be served on any appropriate corporate officers.

3. The Secretary is authorized to commence a civil action for appropriate relief, including a permanent or temporary injunction for any violation for which he is authorized to issue a compliance order under paragraph (1) of this subsection. Any action under this paragraph may be brought in the district court of the United States for the district in which the defendant is located or resides or is doing business, and such court shall have jurisdiction to restrain such violation and to require compliance. Notice of the commencement of such action shall be given immediately to the appropriate State.

4.

   A. Any person who willfully or negligently violates any condition or limitation in a permit issued by the Secretary under this section shall be punished by a fine of not less than $2,500 nor more than $25,000 per day of violation, or by imprisonment for not more than one year, or by both. If the conviction is for a violation committed after a first conviction of such person under this paragraph, punishment shall be by fine of not more than $50,000 per day of violation, or by imprisonment for not more than two years, or by both.
   B. For the purposes of this paragraph, the term "person" shall mean, in addition to the definition contained in section 502(5) of this Act, any responsible corporate officer.

5. Any person who violates any condition or limitation in a permit issued by the Secretary under this section, and any person who violates any order issued by the Secretary under paragraph (1) of this subsection, shall he subject to a civil penalty not to exceed $10,000 per day of such violation.

T. Nothing in this section shall preclude or deny the right of any State or interstate agency to control the discharge of dredged or fill material in any portion of the navigable waters within the jurisdiction of such State, including any activity of any Federal agency, and each such agency shall comply with such State or interstate requirements both substantive and procedural to control the discharge of dredged or fill material to the same extent that any person is subject to such requirements. This section shall not be construed as affecting or impairing the authority of the Secretary to maintain navigation.

Attachment O - PENDING

Water Pollution Control Cost Breakdown

Project Name: San Gabriel Generating Station Plant

Project Number: Pending

ITEM	ITEM DESCRIPTION	UNIT	ESTIMATED QUANTITY	VALUE	AMOUNT
EC-9	Earth Dikes & Drainage Swales	FT			
EC-10	Velocity Dissipation Devices	EA	1		
SE-1	Silt Fence	FT			
SE-2	Sediment Basin	EA			
SE-3	Sediment Trap	EA	1		
SE-4	Check Dam	EA			
SE-7	Street Sweeping and Vacuuming	LS	Each event		
SE-9	Straw Bale Barrier	FT			
SE-10	Storm Drain Inlet Protection	EA	25		
WE-1	Wind Erosion Control	LS	Each event		
TC-1	Stabilized Construction Entrance/Exit	EA	1		
TC-2	Stabilized Construction Roadway	FT	3,300		
NS-2	Dewatering Operations	EA	Each event		
NS-4	Temporary Stream Crossing	EA	1		
NS-9	Vehicle and Equipment Fueling	LS	1’ Area		
NS-10	Vehicle and Equipment Maintenance	LS	1’ Area		
NS-11	Pile Driving Operations	LS			
NS-12	Concrete Curing	LS			
NS-14	Concrete Finishing	LS			
NS-16	Temporary Batch Plants	LS	1		
WM-1	Material Delivery and Storage	LS	1’ Area		
WM-2	Material Use	LS	1’ Area		
WM-3	Stockpile Management	LS	Each		
WM-4	Spill Prevention and Control	LS	Each		
WM-5	Solid Waste Management	LS	Duration		

ITEM	ITEM DESCRIPTION	UNIT	ESTIMATED QUANTITY	VALUE	AMOUNT
WM-6	Hazardous Waste Management	LS	Duration		
WM-8	Concrete Waste Management	LS	Duration		
WM-9	Sanitary/Septic Waste Management	LS	Duration		
			TOTAL		

Attachment P

Notice of Termination

Attachment Q

BMPs Selected for the Project

INSTRUCTIONS

- Insert a list or copies of BMPs, from the *California Stormwater BMP Handbook, Construction*, selected for this project, after this page. If only a list is inserted, a copy of the handbook must be kept at the project site with the SWPPP at all times.

Scheduling EC-1

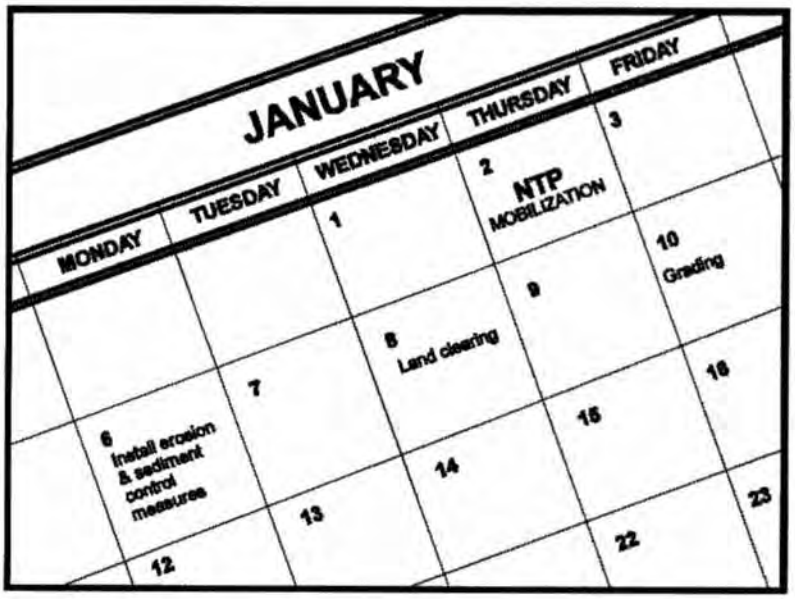

Objectives

EC	Erosion Control	☑
SE	Sediment Control	☒
TR	Tracking Control	☒
WE	Wind Erosion Control	☒
NS	Non-Stormwater Management Control	
WM	Waste Management and Materials Pollution Control	

Legend:

☑ Primary Objective

☒ Secondary Objective

Targeted Constituents

Sediment	☑
Nutrients	
Trash	
Metals	
Bacteria	
Oil and Grease	
Organics	

Potential Alternatives

None

Description and Purpose

Scheduling is the development of a written plan that includes sequencing of construction activities and the implementation of BMPs such as erosion control and sediment control while taking local climate (rainfall, wind, etc.) into consideration. The purpose is to reduce the amount and duration of soil exposed to erosion by wind, rain, runoff, and vehicle tracking, and to perform the construction activities and control practices in accordance with the planned schedule.

Suitable Applications

Proper sequencing of construction activities to reduce erosion potential should be incorporated into the schedule of every construction project especially during rainy season. Use of other, more costly yet less effective, erosion and sediment control BMPs may often be reduced through proper construction sequencing.

Limitations

- Environmental constraints such as nesting season prohibitions reduce the full capabilities of this BMP.

Implementation

- Avoid rainy periods. Schedule major grading operations during dry months when practical. Allow enough time before rainfall begins to stabilize the soil with vegetation or physical means or to install sediment trapping devices.

- Plan the project and develop a schedule showing each phase of construction. Clearly show how the rainy season relates to soil

disturbing and re-stabilization activities. Incorporate the construction schedule into the SWPPP.

- Include on the schedule, details on the rainy season implementation and deployment of:
  - Erosion control BMPs
  - Sediment control BMPs
  - Tracking control BMPs
  - Wind erosion control BMPs
  - Non-stormwater BMPs
  - Waste management and materials pollution control BMPs
- Include dates for activities that may require non-stormwater discharges such as dewatering, sawcutting, grinding, drilling, boring, crushing, blasting, painting, hydro-demolition, mortar mixing, pavement cleaning, etc.
- Work out the sequencing and timetable for the start and completion of each item such as site clearing and grubbing, grading, excavation, paving, foundation pouring utilities installation, etc., to minimize the active construction area during the rainy season.
  - Sequence trenching activities so that most open portions are closed before new trenching begins.
  - Incorporate staged seeding and re-vegetation of graded slopes as work progresses.
  - Schedule establishment of permanent vegetation during appropriate planting time for specified vegetation.
- Non-active areas should be stabilized as soon as practical after the cessation of soil disturbing activities or one day prior to the onset of precipitation.
- Monitor the weather forecast for rainfall.
- When rainfall is predicted, adjust the construction schedule to allow the implementation of soil stabilization and sediment treatment controls on all disturbed areas prior to the onset of rain.
- Be prepared year round to deploy erosion control and sediment control BMPs. Erosion may be caused during dry seasons by un-seasonal rainfall, wind, and vehicle tracking. Keep the site stabilized year round, and retain and maintain rainy season sediment trapping devices in operational condition.
- Apply permanent erosion control to areas deemed substantially complete during the project's defined seeding window.

Costs

Construction scheduling to reduce erosion may increase other construction costs due to reduced economies of scale in performing site grading. The cost effectiveness of scheduling techniques should be compared with the other less effective erosion and sedimentation controls to achieve a cost effective balance.

Inspection and Maintenance

- Verify that work is progressing in accordance with the schedule. If progress deviates, take corrective actions.
- Amend the schedule when changes are warranted.
- Amend the schedule prior to the rainy season to show updated information on the deployment and implementation of construction site BMPs.

References

Stormwater Quality Handbooks Construction Site Best Management Practices (BMPs) Manual, State of California Department of Transportation (Caltrans), November 2000.

Stormwater Management for Construction Activities Developing Pollution Prevention Plans and Best Management Practices (EPA 832-R-92-005), U.S. Environmental Protection Agency, Office of Water, September 1992.

Velocity Dissipation Devices EC-10

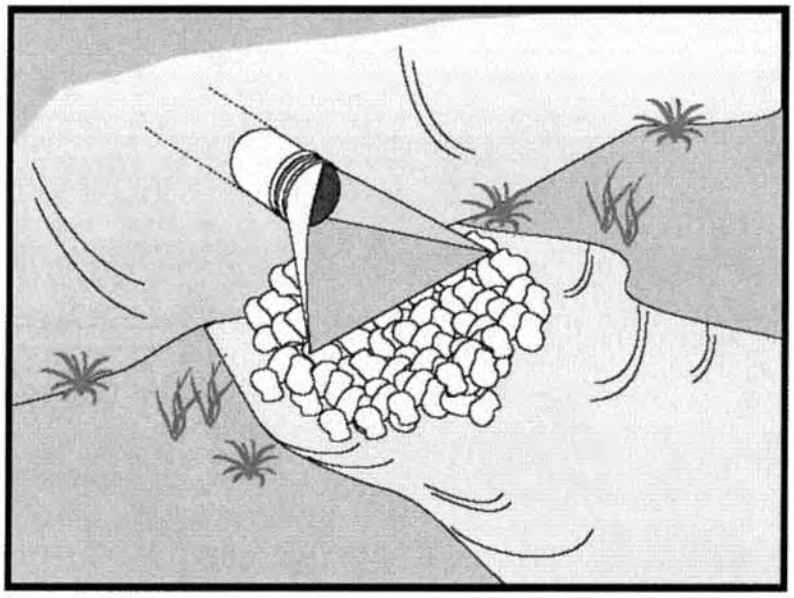

Objectives

EC	Erosion Control	☑
SE	Sediment Control	
TR	Tracking Control	
WE	Wind Erosion Control	
NS	Non-Stormwater Management Control	
WM	Waste Management and Materials Pollution Control	

Legend:
☑ Primary Objective
☒ Secondary Objective

Targeted Constituents

Sediment	☑
Nutrients	
Trash	
Metals	
Bacteria	
Oil and Grease	
Organics	

Potential Alternatives

None

Description and Purpose

Outlet protection is a physical device composed of rock, grouted riprap, or concrete rubble, which is placed at the outlet of a pipe or channel to prevent scour of the soil caused by concentrated, high velocity flows.

Suitable Applications

Whenever discharge velocities and energies at the outlets of culverts, conduits, or channels are sufficient to erode the next downstream reach. This includes temporary diversion structures to divert runon during construction.

- These devices may be used at the following locations:
  - Outlets of pipes, drains, culverts, slope drains, diversion ditches, swales, conduits, or channels.
  - Outlets located at the bottom of mild to steep slopes.
  - Discharge outlets that carry continuous flows of water.
  - Outlets subject to short, intense flows of water, such as flash floods.
  - Points where lined conveyances discharge to unlined conveyances

Limitations

- Large storms or high flows can wash away the rock outlet protection and leave the area susceptible to erosion.

- Sediment captured by the rock outlet protection may be difficult to remove without removing the rock.
- Outlet protection may negatively impact the channel habitat.
- Grouted riprap may break up in areas of freeze and thaw.
- If there is not adequate drainage, and water builds up behind grouted riprap, it may cause the grouted riprap to break up due to the resulting hydrostatic pressure.

Implementation

General

Outlet protection is needed where discharge velocities and energies at the outlets of culverts, conduits or channels are sufficient to erode the immediate downstream reach. This practice protects the outlet from developing small eroded pools (plange pools), and protects against gully erosion resulting from scouring at a culvert mouth.

Design and Layout

As with most channel design projects, depth of flow, roughness, gradient, side slopes, discharge rate, and velocity should be considered in the outlet design. Compliance to local and state regulations should also be considered while working in environmentally sensitive streambeds. General recommendations for rock size and length of outlet protection mat are shown in the rock outlet protection figure in this BMP and should be considered minimums. The apron length and rock size gradation are determined using a combination of the discharge pipe diameter and estimate discharge rate: Select the longest apron length and largest rock size suggested by the pipe size and discharge rate. Where flows are conveyed in open channels such as ditches and swales, use the estimated discharge rate for selecting the apron length and rock size. Flows should be same as the culvert or channel design flow but never the less than the peak 5 year flow for temporary structures planned for one rainy season, or the 10 year peak flow for temporary structures planned for two or three rainy seasons.

- There are many types of energy dissipaters, with rock being the one that is represented in the attached figure.
- Best results are obtained when sound, durable, and angular rock is used.
- Install riprap, grouted riprap, or concrete apron at selected outlet. Riprap aprons are best suited for temporary use during construction. Grouted or wired tied rock riprap can minimize maintenance requirements.
- Rock outlet protection is usually less expensive and easier to install than concrete aprons or energy dissipaters. It also serves to trap sediment and reduce flow velocities.
- Carefully place riprap to avoid damaging the filter fabric.
    - Stone 4 in. to 6 in. may be carefully dumped onto filter fabric from a height not to exceed 12 in.
    - Stone 8 in. to 12 in. must be hand placed onto filter fabric, or the filter fabric may be covered with 4 in. of gravel and the 8 in. to 12 in. rock may be dumped from a height not to exceed 16 in.

- Stone greater than 12 in. shall only be dumped onto filter fabric protected with a layer of gravel with a thickness equal to one half the D_{50} rock size, and the dump height limited to twice the depth of the gravel protection layer thickness.

- For proper operation of apron: Align apron with receiving stream and keep straight throughout its length. If a curve is needed to fit site conditions, place it in upper section of apron.

- Outlets on slopes steeper than 10 percent should have additional protection.

Costs

Costs are low if material is readily available. If material is imported, costs will be higher. Average installed cost is $150 per device.

Inspection and Maintenance

- Inspect BMPs prior to forecast rain, daily during extended rain events, after rain events, weekly during the rainy season, and at two-week intervals during the non-rainy season.

- Inspect BMPs subjected to non-stormwater discharges daily while non-stormwater discharges occur.

- Inspect apron for displacement of the riprap and damage to the underlying fabric. Repair fabric and replace riprap that has washed away. If riprap continues to wash away, consider using larger material.

- Inspect for scour beneath the riprap and around the outlet. Repair damage to slopes or underlying filter fabric immediately.

- Temporary devices should be completely removed as soon as the surrounding drainage area has been stabilized or at the completion of construction.

References

County of Sacramento Improvement Standards, Sacramento County, May 1989.

Erosion and Sediment Control Handbook, S.J. Goldman, K. Jackson, T.A. Bursztynsky, P.E., McGraw Hill Book Company, 1986.

Handbook of Steel Drainage & Highway Construction, American Iron and Steel Institute, 1983.

Manual of Standards of Erosion and Sediment Control Measures, Association of Bay Area Governments, May 1995.

Stormwater Quality Handbooks Construction Site Best Management Practices (BMPs) Manual, state of California Department of Transportation (Caltrans), November 2000.

Stormwater Management of the Puget Sound Basin, Technical Manual, Publication #91-75, Washington State Department of Ecology, February 1992.

Water Quality Management Plan for the Lake Tahoe Region, Volume II, Handbook of Management Practices, Tahoe Regional Planning Agency, November 1988.

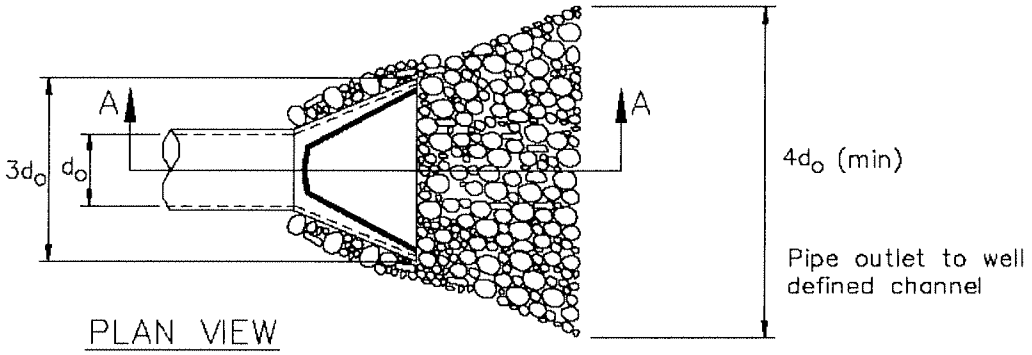

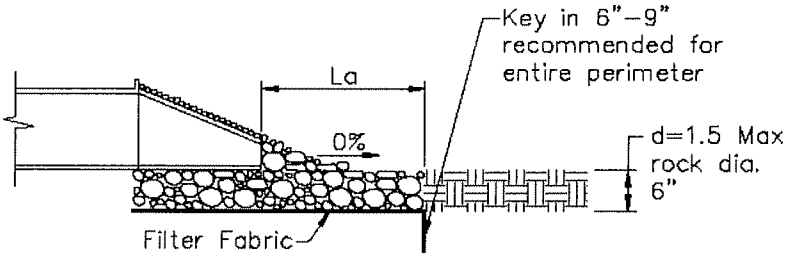

SECTION A–A

Pipe Diameter inches	Discharge ft^3/s	Apron Length, La ft	Rip Rap D_{50} Diameter Min inches
12	5	10	4
	10	13	6
18	10	10	6
	20	16	8
	30	23	12
	40	26	16
24	30	16	8
	40	26	8
	50	26	12
	60	30	16

For larger or higher flows consult a Registered Civil Engineer
Source: USDA - SCS

Earth Dikes and Drainage Swales EC-9

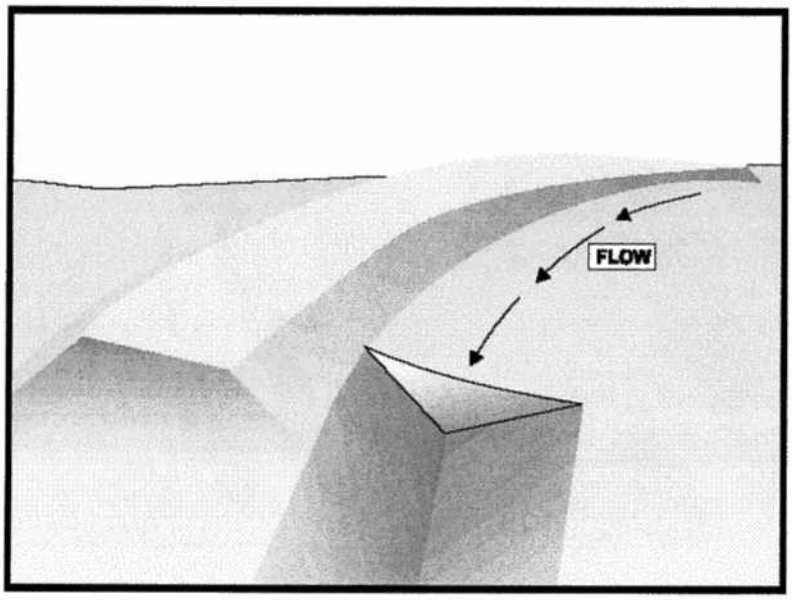

Objectives

EC	Erosion Control	☑
SE	Sediment Control	
TR	Tracking Control	
WE	Wind Erosion Control	
NS	Non-Stormwater Management Control	
WM	Waste Management and Materials Pollution Control	

Legend:
☑ Primary Objective
☒ Secondary Objective

Targeted Constituents

Sediment	☑
Nutrients	
Trash	
Metals	
Bacteria	
Oil and Grease	
Organics	

Potential Alternatives

None

Description and Purpose

An earth dike is a temporary berm or ridge of compacted soil used to divert runoff or channel water to a desired location. A drainage swale is a shaped and sloped depression in the soil surface used to convey runoff to a desired location. Earth dikes and drainage swales are used to divert off site runoff around the construction site, divert runoff from stabilized areas and disturbed areas, and direct runoff into sediment basins or traps.

Suitable Applications

Earth dikes and drainage swales are suitable for use, individually or together, where runoff needs to be diverted from one area and conveyed to another.

- Earth dikes and drainage swales may be used:
  - To convey surface runoff down sloping land
  - To intercept and divert runoff to avoid sheet flow over sloped surfaces
  - To divert and direct runoff towards a stabilized watercourse, drainage pipe or channel
  - To intercept runoff from paved surfaces
  - Below steep grades where runoff begins to concentrate
  - Along roadways and facility improvements subject to flood drainage

- At the top of slopes to divert runon from adjacent or undisturbed slopes
- At bottom and mid slope locations to intercept sheet flow and convey concentrated flows
- Divert sediment laden runoff into sediment basins or traps

Limitations

Dikes should not be used for drainage areas greater than 10 acres or along slopes greater than 10 percent. For larger areas more permanent drainage structures should be built. All drainage structures should be built in compliance with local municipal requirements.

- Earth dikes may create more disturbed area on site and become barriers to construction equipment.
- Earth dikes must be stabilized immediately, which adds cost and maintenance concerns.
- Diverted stormwater may cause downstream flood damage.
- Dikes should not be constructed of soils that may be easily eroded.
- Regrading the site to remove the dike may add additional cost.
- Temporary drains and swales or any other diversion of runoff should not adversely impact upstream or downstream properties.
- Temporary drains and swales must conform to local floodplain management requirements.
- Earth dikes/drainage swales are not suitable as sediment trapping devices.
- It may be necessary to use other soil stabilization and sediment controls such as check dams, plastics, and blankets, to prevent scour and erosion in newly graded dikes, swales, and ditches.

Implementation

The temporary earth dike is a berm or ridge of compacted soil, located in such a manner as to divert stormwater to a sediment trapping device or a stabilized outlet, thereby reducing the potential for erosion and offsite sedimentation. Earth dikes can also be used to divert runoff from off site and from undisturbed areas away from disturbed areas and to divert sheet flows away from unprotected slopes.

An earth dike does not itself control erosion or remove sediment from runoff. A dike prevents erosion by directing runoff to an erosion control device such as a sediment trap or directing runoff away from an erodible area. Temporary diversion dikes should not adversely impact adjacent properties and must conform to local floodplain management regulations, and should not be used in areas with slopes steeper than 10%.

Slopes that are formed during cut and fill operations should be protected from erosion by runoff. A combination of a temporary drainage swale and an earth dike at the top of a slope can divert runoff to a location where it can be brought to the bottom of the slope (see EC-11, Slope Drains). A combination dike and swale is easily constructed by a single pass of a bulldozer or grader and

compacted by a second pass of the tracks or wheels over the ridge. Diversion structures should be installed when the site is initially graded and remain in place until post construction BMPs are installed and the slopes are stabilized.

Diversion practices concentrate surface runoff, increasing its velocity and erosive force. Thus, the flow out of the drain or swale must be directed onto a stabilized area or into a grade stabilization structure. If significant erosion will occur, a swale should be stabilized using vegetation, chemical treatment, rock rip-rap, matting, or other physical means of stabilization. Any drain or swale that conveys sediment laden runoff must be diverted into a sediment basin or trap before it is discharged from the site.

General

- Care must be applied to correctly size and locate earth dikes, drainage swales. Excessively steep, unlined dikes, and swales are subject to erosion and gully formation.
- Conveyances should be stabilized.
- Use a lined ditch for high flow velocities.
- Select flow velocity based on careful evaluation of the risks due to erosion of the measure, soil types, overtopping, flow backups, washout, and drainage flow patterns for each project site.
- Compact any fills to prevent unequal settlement.
- Do not divert runoff onto other property without securing written authorization from the property owner.
- When possible, install and utilize permanent dikes, swales, and ditches early in the construction process.
- Provide stabilized outlets.

Earth Dikes

Temporary earth dikes are a practical, inexpensive BMP used to divert stormwater runoff. Temporary diversion dikes should be installed in the following manner:

- All dikes should be compacted by earth moving equipment.
- All dikes should have positive drainage to an outlet.
- All dikes should have 2:1 or flatter side slopes, 18 in. minimum height, and a minimum top width of 24 in. Wide top widths and flat slopes are usually needed at crossings for construction traffic.
- The outlet from the earth dike must function with a minimum of erosion. Runoff should be conveyed to a sediment trapping device such as a Sediment Trap (SE-3) or Sediment Basin (SE-2) when either the dike channel or the drainage area above the dike are not adequately stabilized.

- Temporary stabilization may be achieved using seed and mulching for slopes less than 5% and either rip-rap or sod for slopes in excess of 5%. In either case, stabilization of the earth dike should be completed immediately after construction or prior to the first rain.
- If riprap is used to stabilize the channel formed along the toe of the dike, the following typical specifications apply:

Channel Grade	Riprap Stabilization
0.5-1.0%	4 in. Rock
1.1-2.0%	6 in. Rock
2.1-4.0%	8 in. Rock
4.1-5.0%	8 in. -12 in. Riprap

- The stone riprap, recycled concrete, etc. used for stabilization should be pressed into the soil with construction equipment.
- Filter cloth may be used to cover dikes in use for long periods.
- Construction activity on the earth dike should be kept to a minimum.

Drainage Swales

Drainage swales are only effective if they are properly installed. Swales are more effective than dikes because they tend to be more stable. The combination of a swale with a dike on the downhill side is the most cost effective diversion.

Standard engineering design criteria for small open channel and closed conveyance systems should be used (see the local drainage design manual). Unless local drainage design criteria state otherwise, drainage swales should be designed as follows:

- No more than 5 acres may drain to a temporary drainage swale.
- Place drainage swales above or below, not on, a cut or fill slope.
- Swale bottom width should be at least 2 ft
- Depth of the swale should be at least 18 in.
- Side slopes should be 2:1 or flatter.
- Drainage or swales should be laid at a grade of at least 1 percent, but not more than 15 percent.
- The swale must not be overtopped by the peak discharge from a 10-year storm, irrespective of the design criteria stated above.
- Remove all trees, stumps, obstructions, and other objectionable material from the swale when it is built.
- Compact any fill material along the path of the swale.

- Stabilize all swales immediately. Seed and mulch swales at a slope of less than 5 percent, and use rip-rap or sod for swales with a slope between 5 and 15 percent. For temporary swales, geotextiles and mats (EC-7) may provide immediate stabilization.
- Irrigation may be required to establish sufficient vegetation to prevent erosion.
- Do not operate construction vehicles across a swale unless a stabilized crossing is provided.
- Permanent drainage facilities must be designed by a professional engineer (see the local drainage design criteria for proper design).
- At a minimum, the drainage swale should conform to predevelopment drainage patterns and capacities.
- Construct the drainage swale with a positive grade to a stabilized outlet.
- Provide erosion protection or energy dissipation measures if the flow out of the drainage swale can reach an erosive velocity.

Costs

- Cost ranges from $15 to $55 per ft for both earthwork and stabilization and depends on availability of material, site location, and access.
- Small dikes: $2.50 - $6.50/linear ft; Large dikes: $2.50/yd^3.
- The cost of a drainage swale increases with drainage area and slope. Typical swales for controlling internal erosion are inexpensive, as they are quickly formed during routine earthwork.

Inspection and Maintenance

- Inspect BMPs prior to forecast rain, daily during extended rain events, after rain events, weekly during the rainy season, and at two-week intervals during the non-rainy season.
- Inspect BMPs subject to non-stormwater discharges daily while non-stormwater discharges occur.
- Inspect ditches and berms for washouts. Replace lost riprap, damaged linings or soil stabilizers as needed.
- Inspect channel linings, embankments, and beds of ditches and berms for erosion and accumulation of debris and sediment. Remove debris and sediment and repair linings and embankments as needed.
- Temporary conveyances should be completely removed as soon as the surrounding drainage area has been stabilized or at the completion of construction

References

Erosion and Sediment Control Handbook, S.J. Goldman, K. Jackson, T.A. Bursetynsky, P.E., McGraw Hill Book Company, 1986.

Manual of Standards of Erosion and Sediment Control Measures, Association of Bay Area Governments, May 1995.

National Association of Home Builders (NAHB). Stormwater Runoff & Nonpoint Source Pollution Control Guide for Builders and Developers. National Association of Home Builders, Washington, D.C., 1995

National Management Measures to Control Nonpoint Source Pollution from Urban Areas, United States Environmental Protection Agency, 2002.

Southeastern Wisconsin Regional Planning Commission (SWRPC). Costs of Urban Nonpoint Source Water Pollution Control Measures. Technical Report No. 31. Southeastern Wisconsin Regional Planning Commission, Waukesha, WI. 1991

Stormwater Quality Handbooks Construction Site Best Management Practices (BMPs) Manual, State of California Department of Transportation (Caltrans), November 2000.

Stormwater Management of the Puget Sound Basin, Technical Manual, Publication #91-75, Washington State Department of Ecology, February 1992.

Water Quality Management Plan for the Lake Tahoe Region, Volume II, Handbook of Management Practices, Tahoe Regional Planning Agency, November 1988.

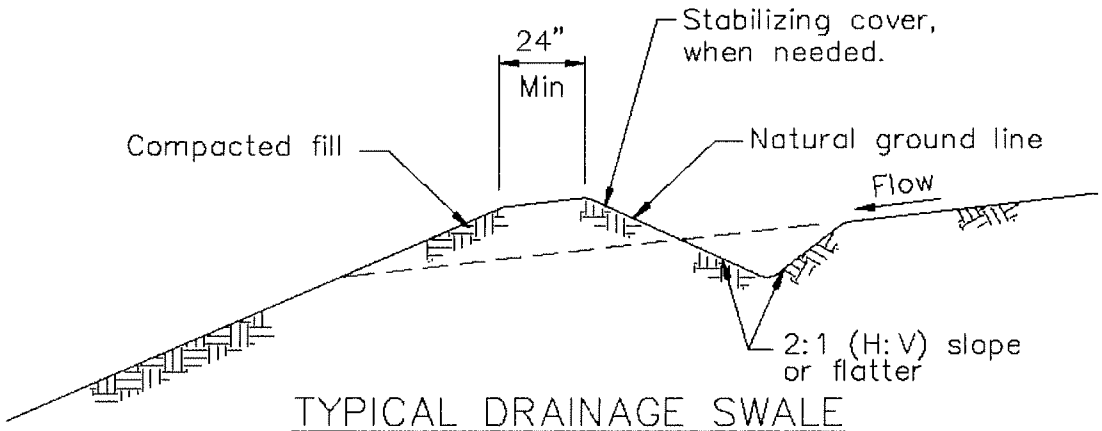

TYPICAL DRAINAGE SWALE
NOT TO SCALE

NOTES:

1. Stabilize inlet, outlets and slopes.
2. Properly compact the subgrade.

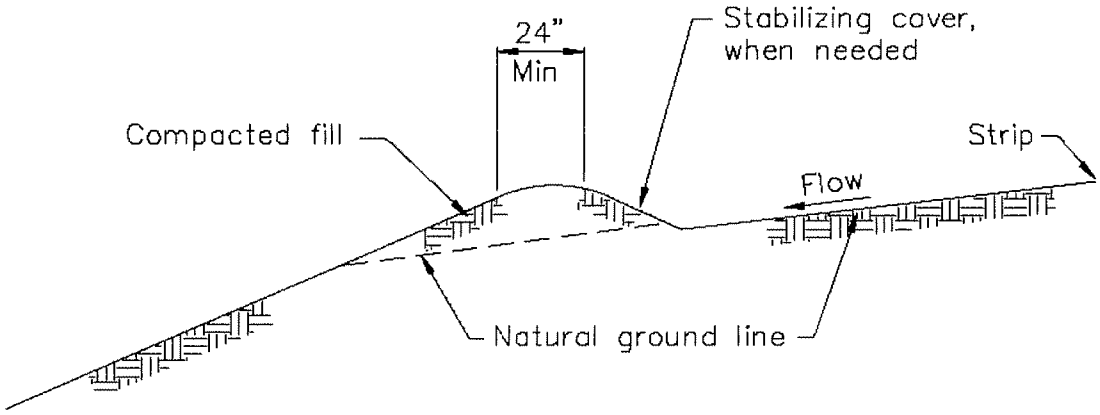

TYPICAL EARTH DIKE
NOT TO SCALE

Silt Fence SE-1

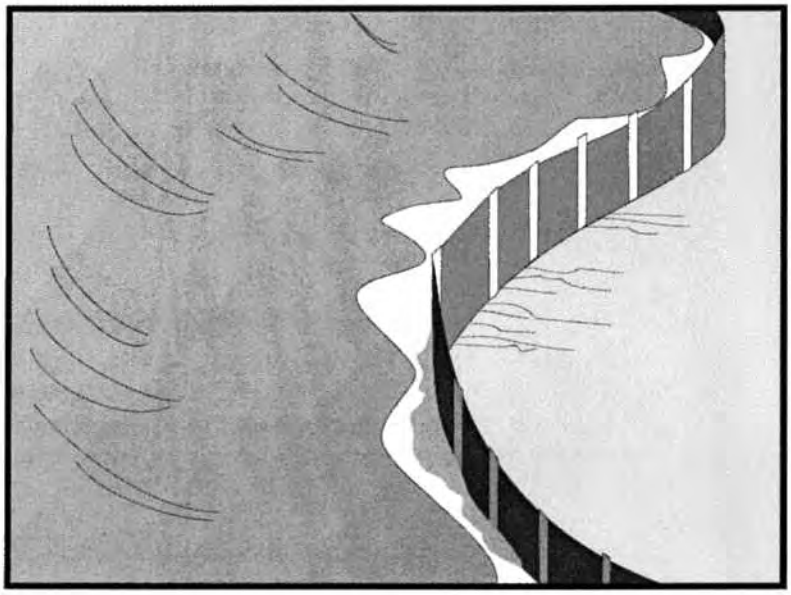

Objectives

EC	Erosion Control	
SE	Sediment Control	☑
TR	Tracking Control	
WE	Wind Erosion Control	
NS	Non-Stormwater Management Control	
WM	Waste Management and Materials Pollution Control	

Legend:

☑ **Primary Objective**

☒ **Secondary Objective**

Targeted Constituents

Sediment	☑
Nutrients	
Trash	
Metals	
Bacteria	
Oil and Grease	
Organics	

Potential Alternatives

SE-5 Fiber Rolls

SE-6 Gravel Bag Berm

SE-8 Sandbag Barrier

SE-9 Straw Bale Barrier

Description and Purpose

A silt fence is made of a filter fabric that has been entrenched, attached to supporting poles, and sometimes backed by a plastic or wire mesh for support. The silt fence detains sediment-laden water, promoting sedimentation behind the fence.

Suitable Applications

Silt fences are suitable for perimeter control, placed below areas where sheet flows discharge from the site. They should also be used as interior controls below disturbed areas where runoff may occur in the form of sheet and rill erosion. Silt fences are generally ineffective in locations where the flow is concentrated and are only applicable for sheet or overland flows. Silt fences are most effective when used in combination with erosion controls. Suitable applications include:

- Along the perimeter of a project.
- Below the toe or down slope of exposed and erodible slopes.
- Along streams and channels.
- Around temporary spoil areas and stockpiles.
- Below other small cleared areas.

Limitations

- Do not use in streams, channels, drain inlets, or anywhere flow is concentrated.

- Do not use in locations where ponded water may cause flooding.
- Do not place fence on a slope, or across any contour line. If not installed at the same elevation throughout, silt fences will create erosion.
- Filter fences will create a temporary sedimentation pond on the upstream side of the fence and may cause temporary flooding. Fences not constructed on a level contour will be overtopped by concentrated flow resulting in failure of the filter fence.
- Improperly installed fences are subject to failure from undercutting, overlapping, or collapsing.
  - Not effective unless trenched and keyed in.
  - Not intended for use as mid-slope protection on slopes greater than 4:1 (H:V).
  - Do not allow water depth to exceed 1.5 ft at any point.

Implementation

General

A silt fence is a temporary sediment barrier consisting of filter fabric stretched across and attached to supporting posts, entrenched, and, depending upon the strength of fabric used, supported with plastic or wire mesh fence. Silt fences trap sediment by intercepting and detaining small amounts of sediment-laden runoff from disturbed areas in order to promote sedimentation behind the fence.

Silt fences are preferable to straw bale barriers in many cases. Laboratory work at the Virginia Highway and Transportation Research Council has shown that silt fences can trap a much higher percentage of suspended sediments than can straw bales. While the failure rate of silt fences is lower than that of straw bale barriers, there are many instances where silt fences have been improperly installed. The following layout and installation guidance can improve performance and should be followed:

- Use principally in areas where sheet flow occurs.
- Don't use in streams, channels, or anywhere flow is concentrated. Don't use silt fences to divert flow.
- Don't use below slopes subject to creep, slumping, or landslides.
- Select filter fabric that retains 85% of soil by weight, based on sieve analysis, but that is not finer than an equivalent opening size of 70.
- Install along a level contour, so water does not pond more than 1.5 ft at any point along the silt fence.
- The maximum length of slope draining to any point along the silt fence should be 200 ft or less.
- The maximum slope perpendicular to the fence line should be 1:1.

- Provide sufficient room for runoff to pond behind the fence and to allow sediment removal equipment to pass between the silt fence and toes of slopes or other obstructions. About 1200 ft^2 of ponding area should be provided for every acre draining to the fence.
- Turn the ends of the filter fence uphill to prevent stormwater from flowing around the fence.
- Leave an undisturbed or stabilized area immediately down slope from the fence where feasible.
- Silt fences should remain in place until the disturbed area is permanently stabilized.

Design and Layout

Selection of a filter fabric is based on soil conditions at the construction site (which affect the equivalent opening size (EOS) fabric specification) and characteristics of the support fence (which affect the choice of tensile strength). The designer should specify a filter fabric that retains the soil found on the construction site yet that it has openings large enough to permit drainage and prevent clogging. The following criteria is recommended for selection of the equivalent opening size:

1. If 50 percent or less of the soil, by weight, will pass the U.S. Standard Sieve No. 200, select the EOS to retain 85 % of the soil. The EOS should not be finer than EOS 70.
2. For all other soil types, the EOS should be no larger than the openings in the U.S. Standard Sieve No. 70 except where direct discharge to a stream, lake, or wetland will occur, then the EOS should be no larger than Standard Sieve No. 100.

To reduce the chance of clogging, it is preferable to specify a fabric with openings as large as allowed by the criteria. No fabric should be specified with an EOS smaller than U.S. Standard Sieve No. 100. If 85% or more of a soil, by weight, passes through the openings in a No. 200 sieve, filter fabric should not be used. Most of the particles in such a soil would not be retained if the EOS was too large and they would clog the fabric quickly if the EOS were small enough to capture the soil.

The fence should be supported by a plastic or wire mesh if the fabric selected does not have sufficient strength and bursting strength characteristics for the planned application (as recommended by the fabric manufacturer). Filter fabric material should contain ultraviolet inhibitors and stabilizers to provide a minimum of six months of expected usable construction life at a temperature range of 0 °F to 120 °F.

- Layout in accordance with attached figures.
- For slopes steeper than 2:1 (H:V) and that contain a high number of rocks or large dirt clods that tend to dislodge, it may be necessary to install additional protection immediately adjacent to the bottom of the slope, prior to installing silt fence. Additional protection may be a chain link fence or a cable fence.
- For slopes adjacent to sensitive receiving waters or Environmentally Sensitive Areas (ESAs), silt fence should be used in conjunction with erosion control BMPs.

Materials

- Silt fence fabric should be woven polypropylene with a minimum width of 36 in. and a minimum tensile strength of 100 lb force. The fabric should conform to the requirements in ASTM designation D4632 and should have an integral reinforcement layer. The reinforcement layer should be a polypropylene, or equivalent, net provided by the manufacturer. The permittivity of the fabric should be between 0.1 sec^{-1} and 0.15 sec^{-1} in conformance with the requirements in ASTM designation D4491.

- Wood stakes should be commercial quality lumber of the size and shape shown on the plans. Each stake should be free from decay, splits or cracks longer than the thickness of the stake or other defects that would weaken the stakes and cause the stakes to be structurally unsuitable.

- Staples used to fasten the fence fabric to the stakes should be not less than 1.75 in. long and should be fabricated from 15 gauge or heavier wire. The wire used to fasten the tops of the stakes together when joining two sections of fence should be 9 gauge or heavier wire. Galvanizing of the fastening wire will not be required.

- There are new products that may use prefabricated plastic holders for the silt fence and use bar reinforcement instead of wood stakes. If bar reinforcement is used in lieu of wood stakes, use number four or greater bar. Provide end protection for any exposed bar reinforcement.

Installation Guidelines

Silt fences are to be constructed on a level contour. Sufficient area should exist behind the fence for ponding to occur without flooding or overtopping the fence.

- A trench should be excavated approximately 6 in. wide and 6 in. deep along the line the proposed silt fence.

- Bottom of the silt fence should be keyed-in a minimum of 12 in.

- Posts should be spaced a maximum of 6 ft apart and driven securely into the ground a minimum of 18 in. or 12 in. below the bottom of the trench.

- When standard strength filter fabric is used, a plastic or wire mesh support fence should be fastened securely to the upslope side of posts using heavy–duty wire staples at least 1 in. long. The mesh should extend into the trench. When extra-strength filter fabric and closer post spacing are used, the mesh support fence may be eliminated. Filter fabric should be purchased in a long roll, and then cut to the length of the barrier. When joints are necessary, filter cloth should be spliced together only at a support post, with a minimum 6 in. overlap and both ends securely fastened to the post.

- The trench should be backfilled with compacted native material.

- Construct silt fences with a setback of at least 3 ft from the toe of a slope. Where a silt fence is determined to be not practicable due to specific site conditions, the silt fence may be constructed at the toe of the slope, but should be constructed as far from the toe of the slope as practicable. Silt fences close to the toe of the slope will be less effective and difficult to maintain.

- Construct the length of each reach so that the change in base elevation along the reach does not exceed 1/3 the height of the barrier; in no case should the reach exceed 500 ft.

Costs

- Average annual cost for installation and maintenance (assumes 6 month useful life): $7 per lineal foot ($850 per drainage acre). Range of cost is $3.50 - $9.10 per lineal foot.

Inspection and Maintenance

- Inspect BMPs prior to forecast rain, daily during extended rain events, after rain events, weekly during the rainy season, and at two-week intervals during the non-rainy season.
- Repair undercut silt fences.
- Repair or replace split, torn, slumping, or weathered fabric. The lifespan of silt fence fabric is generally 5 to 8 months.
- Silt fences that are damaged and become unsuitable for the intended purpose should be removed from the site of work, disposed of, and replaced with new silt fence barriers.
- Sediment that accumulates in the BMP must be periodically removed in order to maintain BMP effectiveness. Sediment should be removed when the sediment accumulation reaches one-third of the barrier height. Sediment removed during maintenance may be incorporated into earthwork on the site or disposed at an appropriate location.
- Silt fences should be left in place until the upstream area is permanently stabilized. Until then, the silt fence must be inspected and maintained.
- Holes, depressions, or other ground disturbance caused by the removal of the silt fences should be backfilled and repaired.

References

Manual of Standards of Erosion and Sediment Control Measures, Association of Bay Area Governments, May 1995.

National Management Measures to Control Nonpoint Source Pollution from Urban Areas, United States Environmental Protection Agency, 2002.

Proposed Guidance Specifying Management Measures for Sources of Nonpoint Pollution in Coastal Waters, Work Group-Working Paper, USEPA, April 1992.

Sedimentation and Erosion Control Practices, and Inventory of Current Practices (Draft), UESPA, 1990.

Southeastern Wisconsin Regional Planning Commission (SWRPC). Costs of Urban Nonpoint Source Water Pollution Control Measures. Technical Report No. 31. Southeastern Wisconsin Regional Planning Commission, Waukesha, WI. 1991

Stormwater Quality Handbooks - Construction Site Best Management Practices (BMPs) Manual, State of California Department of Transportation (Caltrans), November 2000.

Stormwater Management Manual for The Puget Sound Basin, Washington State Department of Ecology, Public Review Draft, 1991.

U.S. Environmental Protection Agency (USEPA). Stormwater Management for Industrial Activities: Developing Pollution Prevention Plans and Best Management Practices. U.S. Environmental Protection Agency, Office of Water, Washington, DC, 1992.

Water Quality Management Plan for the Lake Tahoe Region, Volume II, Handbook of Management Practices, Tahoe Regional Planning Agency, November 1988.

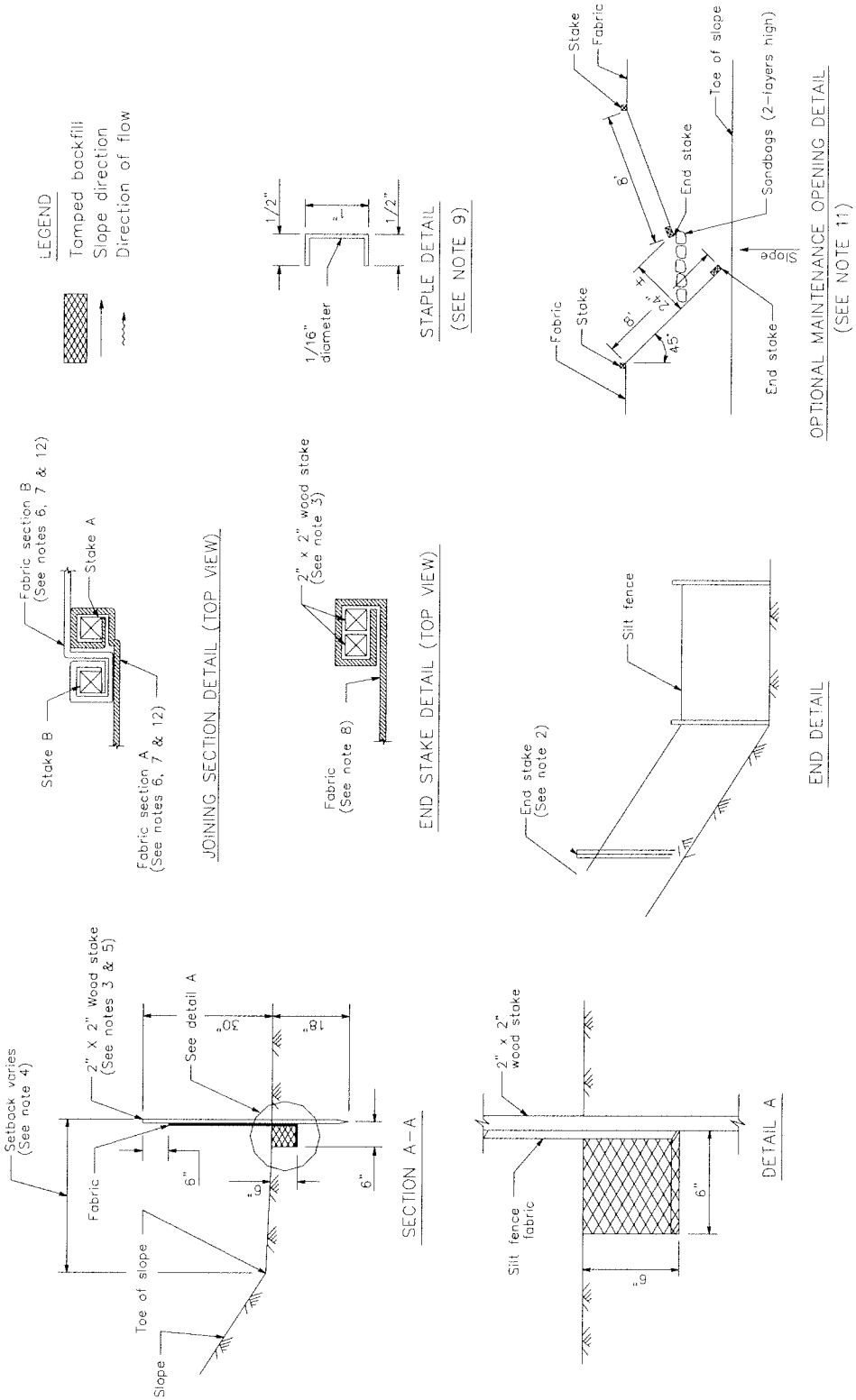
LEGEND
Tamped backfill
Slope direction
Direction of flow
1/16" diameter
1/2"
1/2"
STAPLE DETAIL
(SEE NOTE 9)
Stake
Fabric
Toe of slope
Sandbags (2-layers high)
End stake
8'
4'
2'
8'
45°
Fabric
Stake
End stake
Slope
OPTIONAL MAINTENANCE OPENING DETAIL
(SEE NOTE 11)
Fabric section B
(See notes 6, 7 & 12)
Stake A
Stake B
Fabric section A
(See notes 6, 7 & 12)
JOINING SECTION DETAIL (TOP VIEW)
2" x 2" wood stake
(See note 3)
Fabric
(See note 8)
END STAKE DETAIL (TOP VIEW)
Silt fence
End stake
(See note 2)
END DETAIL
Setback varies
(See note 4)
2" X 2" Wood stake
(See notes 3 & 5)
See detail A
30"
18"
Fabric
6"
6"
6"
Toe of slope
Slope
SECTION A-A
2" x 2"
wood stake
Silt fence
fabric
6"
6"
DETAIL A

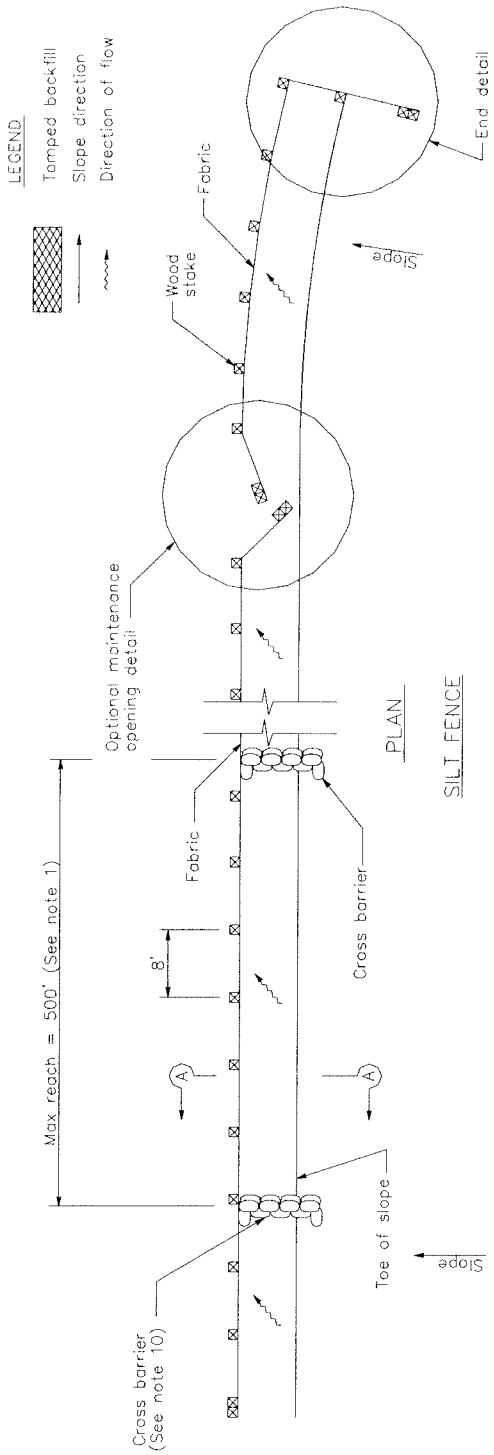

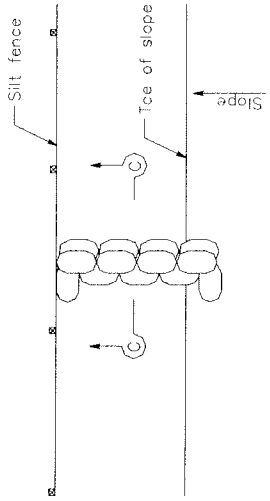

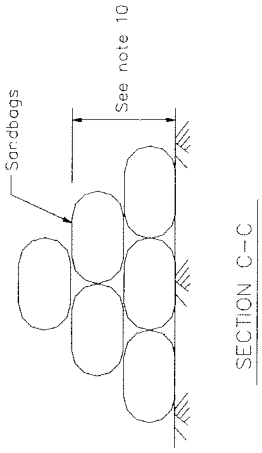

NOTES

1. Construct the length of each reach so that the change in base elevation along the reach does not exceed 1/3 the height of the linear barrier, in no case shall the reach length exceed 500'.
2. The last 8'-0" of fence shall be turned up slope.
3. Stake dimensions are nominal.
4. Dimension may vary to fit field condition.
5. Stakes shall be spaced at 8'-0" maximum and shall be positioned on downstream side of fence.
6. Stakes to overlap and fence fabric to fold around each stake one full turn. Secure fabric to stake with 4 staples.
7. Stakes shall be driven tightly together to prevent potential flow-through of sediment at joint. The tops of the stakes shall be secured with wire.
8. For end stake, fence fabric shall be folded around two stakes one full turn and secured with 4 staples.
9. Minimum 4 staples per stake. Dimensions shown are typical.
10. Cross barriers shall be a minimum of 1/3 and a maximum of 1/2 the height of the linear barrier.
11. Maintenance openings shall be constructed in a manner to ensure sediment remains behind silt fence.
12. Joining sections shall not be placed at sump locations.
13. Sandbag rows and layers shall be offset to eliminate gaps.

Storm Drain Inlet Protection SE-10

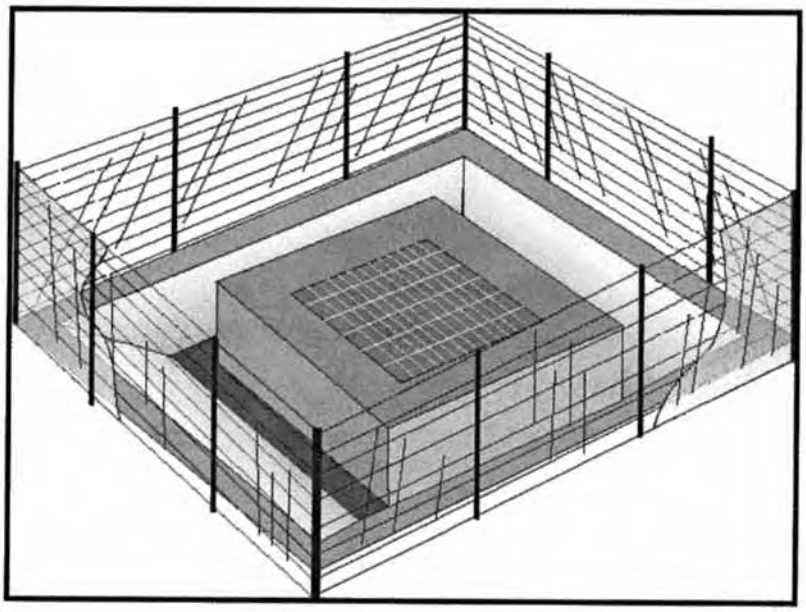

Objectives

EC	Erosion Control	
SE	Sediment Control	☑
TR	Tracking Control	
WE	Wind Erosion Control	
NS	Non-Stormwater Management Control	
WM	Waste Management and Materials Pollution Control	

Legend:
☑ Primary Objective
☒ Secondary Objective

Targeted Constituents

Sediment	☑
Nutrients	
Trash	☑
Metals	
Bacteria	
Oil and Grease	
Organics	

Potential Alternatives

SE-1 Silt Fence
SE-5 Fiber Rolls
SE-6 Gravel Bag Berm
SE-8 Sandbag Barrier
SE-9 Straw Bale Barrier

Description and Purpose

Storm drain inlet protection consists of a sediment filter or an impounding area around or upstream of a storm drain, drop inlet, or curb inlet. Storm drain inlet protection measures temporarily pond runoff before it enters the storm drain, allowing sediment to settle. Some filter configurations also remove sediment by filtering, but usually the ponding action results in the greatest sediment reduction.

Suitable Applications

Every storm drain inlet receiving sediment-laden runoff should be protected.

Limitations

- Drainage area should not exceed 1 acre.
- Straw bales, while potentially effective, have not produced in practice satisfactory results, primarily due to improper installation.
- Requires an adequate area for water to pond without encroaching into portions of the roadway subject to traffic.
- Inlet protection usually requires other methods of temporary protection to prevent sediment-laden stormwater and non-stormwater discharges from entering the storm drain system.
- Sediment removal may be difficult in high flow conditions or if runoff is heavily sediment laden. If high flow conditions are

expected, use other onsite sediment trapping techniques in conjunction with inlet protection.

- Frequent maintenance is required.
- For drainage areas larger than 1 acre, runoff should be routed to a sediment-trapping device designed for larger flows. See BMPs SE-2, Sediment Basin, and SE-3, Sediment Traps.
- Excavated drop inlet sediment traps are appropriate where relatively heavy flows are expected, and overflow capability is needed.

Implementation

General

Large amounts of sediment may enter the storm drain system when storm drains are installed before the upslope drainage area is stabilized, or where construction is adjacent to an existing storm drain. In cases of extreme sediment loading, the storm drain itself may clog and lose a major portion of its capacity. To avoid these problems, it is necessary to prevent sediment from entering the system at the inlets.

Inlet control measures presented in this handbook should not be used for inlets draining more than one acre. Runoff from larger disturbed areas should be first routed through SE-2, Sediment Basin or SE-3, Sediment Trap. Different types of inlet protection are appropriate for different applications depending on site conditions and the type of inlet. Inlet protection methods not presented in this handbook should be approved by the local stormwater management agency.

Design and Layout

Identify existing and planned storm drain inlets that have the potential to receive sediment-laden surface runoff. Determine if storm drain inlet protection is needed and which method to use.

- Limit upstream drainage area to 1 acre maximum. For larger drainage areas, use SE-2, Sediment Basin, or SE-3, Sediment Trap, upstream of the inlet protection device.
- The key to successful and safe use of storm drain inlet protection devices is to know where runoff will pond or be diverted.
  - Determine the acceptable location and extent of ponding in the vicinity of the drain inlet. The acceptable location and extent of ponding will influence the type and design of the storm drain inlet protection device.
  - Determine the extent of potential runoff diversion caused by the storm drain inlet protection device. Runoff ponded by inlet protection devices may flow around the device and towards the next downstream inlet. In some cases, this is acceptable; in other cases, serious erosion or downstream property damage can be caused by these diversions. The possibility of runoff diversions will influence whether or not storm drain inlet protection is suitable; and, if suitable, the type and design of the device.
- The location and extent of ponding, and the extent of diversion, can usually be controlled through appropriate placement of the inlet protection device. In some cases, moving the

inlet protection device a short distance upstream of the actual inlet can provide more efficient sediment control, limit ponding to desired areas, and prevent or control diversions.

- Four types of inlet protection are presented below. However, it is recognized that other effective methods and proprietary devices exist and may be selected.
  - Filter Fabric Fence: Appropriate for drainage basins with less than a 5% slope, sheet flows, and flows under 0.5 cfs.
  - Excavated Drop Inlet Sediment Trap: An excavated area around the inlet to trap sediment (SE-3).
  - Gravel bag barrier: Used to create a small sediment trap upstream of inlets on sloped, paved streets. Appropriate for sheet flow or when concentrated flow may exceed 0.5 cfs, and where overtopping is required to prevent flooding.
  - Block and Gravel Filter: Appropriate for flows greater than 0.5 cfs.
- Select the appropriate type of inlet protection and design as referred to or as described in this fact sheet.
- Provide area around the inlet for water to pond without flooding structures and property.
- Grates and spaces around all inlets should be sealed to prevent seepage of sediment-laden water.
- Excavate sediment sumps (where needed) 1 to 2 ft with 2:1 side slopes around the inlet.

Installation

- ***DI Protection Type 1 - Filter Fabric Fence*** - The filter fabric fence (Type 1) protection is shown in the attached figure. Similar to constructing a silt fence; see BMP SE-1, Silt Fence. Do not place filter fabric underneath the inlet grate since the collected sediment may fall into the drain inlet when the fabric is removed or replaced.
  1. Excavate a trench approximately 6 in. wide and 6 in. deep along the line of the silt fence inlet protection device.
  2. Place 2 in. by 2 in. wooden stakes around the perimeter of the inlet a maximum of 3 ft apart and drive them at least 18 in. into the ground or 12 in. below the bottom of the trench. The stakes must be at least 48 in.
  3. Lay fabric along bottom of trench, up side of trench, and then up stakes. See SE-1, Silt Fence, for details. The maximum silt fence height around the inlet is 24 in.
  4. Staple the filter fabric (for materials and specifications, see SE-1, Silt Fence) to wooden stakes. Use heavy-duty wire staples at least 1 in. in length.
  5. Backfill the trench with gravel or compacted earth all the way around.
- ***DI Protection Type 2 - Excavated Drop Inlet Sediment Trap*** - The excavated drop inlet sediment trap (Type 2) is shown in the attached figures. Install filter fabric fence in

accordance with DI Protection Type 1. Size excavated trap to provide a minimum storage capacity calculated at the rate 67 yd^3/acre of drainage area.

- ***DI Protection Type 3 - Gravel bag*** - The gravel bag barrier (Type 3) is shown in the figures. Flow from a severe storm should not overtop the curb. In areas of high clay and silts, use filter fabric and gravel as additional filter media. Construct gravel bags in accordance with SE-6, Gravel Bag Berm. Gravel bags should be used due to their high permeability.

  1. Use sand bag made of geotextile fabric (not burlap) and fill with 0.75 in. rock or 0.25 in. pea gravel.
  2. Construct on gently sloping street.
  3. Leave room upstream of barrier for water to pond and sediment to settle.
  4. Place several layers of sand bags – overlapping the bags and packing them tightly together.
  5. Leave gap of one bag on the top row to serve as a spillway. Flow from a severe storm (e.g., 10 year storm) should not overtop the curb.

- ***DI Protection Type 4 – Block and Gravel Filter*** - The block and gravel filter (Type 4) is shown in the figures. Block and gravel filters are suitable for curb inlets commonly used in residential, commercial, and industrial construction.

  1. Place hardware cloth or comparable wire mesh with 0.5 in. openings over the drop inlet so that the wire extends a minimum of 1 ft beyond each side of the inlet structure. If more than one strip is necessary, overlap the strips. Place filter fabric over the wire mesh.
  2. Place concrete blocks lengthwise on their sides in a single row around the perimeter of the inlet, so that the open ends face outward, not upward. The ends of adjacent blocks should abut. The height of the barrier can be varied, depending on design needs, by stacking combinations of blocks that are 4 in., 8 in., and 12 in. wide. The row of blocks should be at least 12 in. but no greater than 24 in. high.
  3. Place wire mesh over the outside vertical face (open end) of the concrete blocks to prevent stone from being washed through the blocks. Use hardware cloth or comparable wire mesh with 0.5 in. opening.
  4. Pile washed stone against the wire mesh to the top of the blocks. Use 0.75 to 3 in.

Costs

- Average annual cost for installation and maintenance (one year useful life) is $200 per inlet.

Inspection and Maintenance

- Inspect BMPs prior to forecast rain, daily during extended rain events, after rain events, weekly during the rainy season, and at two-week intervals during the non-rainy season.

- Filter Fabric Fences. If the fabric becomes clogged, torn, or degrades, it should be replaced. Make sure the stakes are securely driven in the ground and are in good shape (i.e., not bent, cracked, or splintered, and are reasonably perpendicular to the ground). Replace damaged stakes.

- Gravel Filters. If the gravel becomes clogged with sediment, it must be carefully removed from the inlet and either cleaned or replaced. Since cleaning gravel at a construction site may be difficult, consider using the sediment-laden stone as fill material and put fresh stone around the inlet. Inspect bags for holes, gashes, and snags, and replace bags as needed. Check gravel bags for proper arrangement and displacement.

- Sediment that accumulates in the BMP must be periodically removed in order to maintain BMP effectiveness. Sediment should be removed when the sediment accumulation reaches one-third of the barrier height. Sediment removed during maintenance may be incorporated into earthwork on the site ore disposed at an appropriate location.

- Remove storm drain inlet protection once the drainage area is stabilized.

  - Clean and regrade area around the inlet and clean the inside of the storm drain inlet as it must be free of sediment and debris at the time of final inspection.

References

Stormwater Quality Handbooks - Construction Site Best Management Practices (BMPs) Manual, State of California Department of Transportation (Caltrans), November 2000.

Stormwater Management Manual for The Puget Sound Basin, Washington State Department of Ecology, Public Review Draft, 1991.

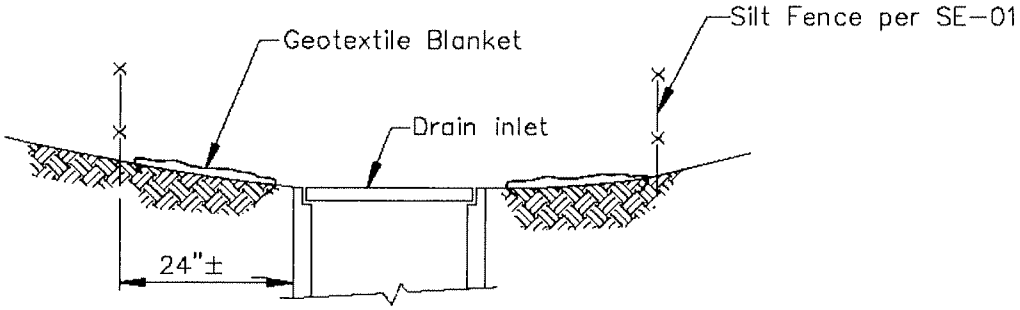

SECTION A-A

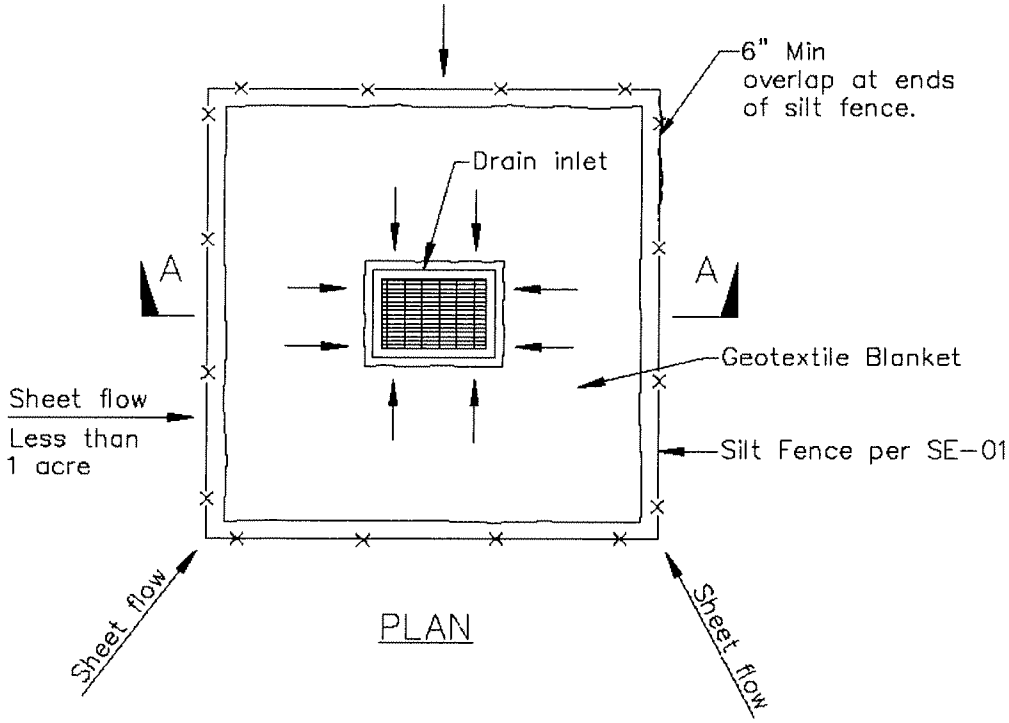

PLAN

DI PROTECTION TYPE 1
NOT TO SCALE

NOTES:

1. For use in areas where grading has been completed and final soil stabilization and seeding are pending.
2. Not applicable in paved areas.
3. Not applicable with concentrated flows.

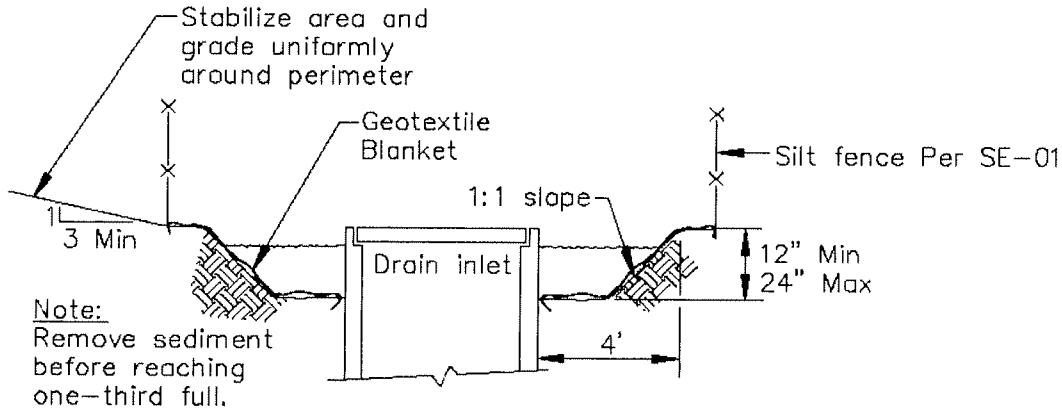

Section A–A

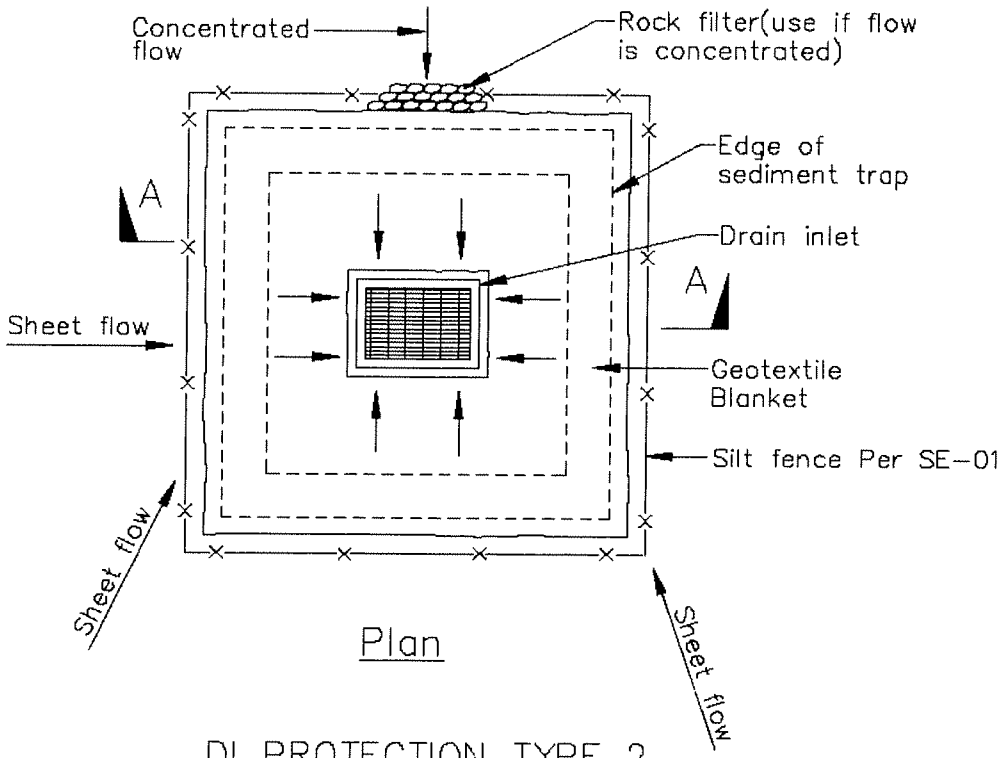

Plan

DI PROTECTION TYPE 2
NOT TO SCALE

Notes
1. For use in cleared and grubbed and in graded areas.
2. Shape basin so that longest inflow area faces longest length of trap.
3. For concentrated flows, shape basin in 2:1 ratio with length oriented towards direction of flow.

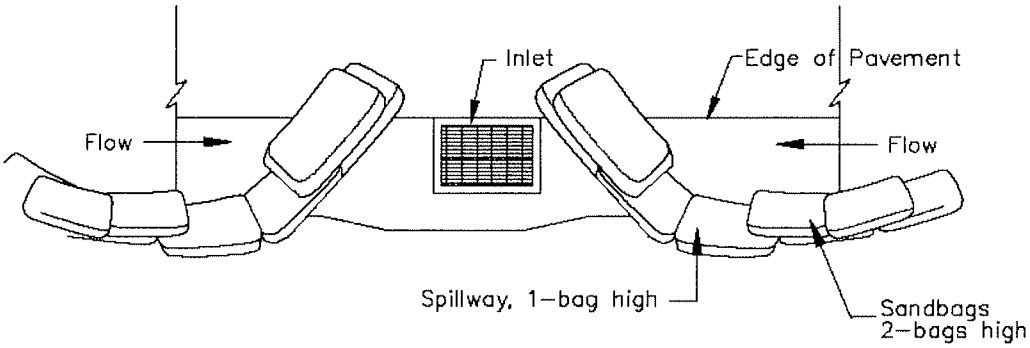

TYPICAL PROTECTION FOR INLET ON SUMP

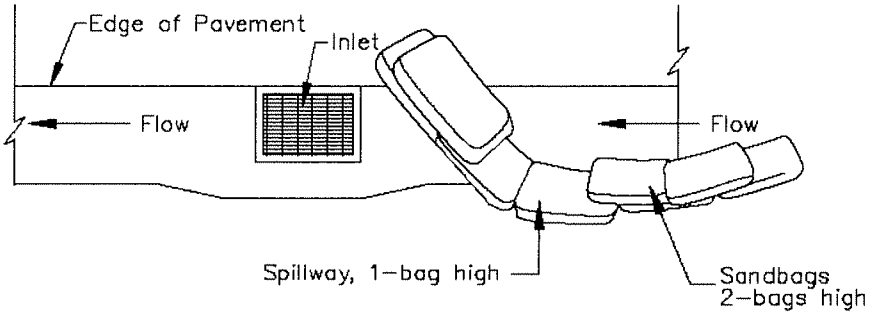

TYPICAL PROTECTION FOR INLET ON GRADE

NOTES:
1. Intended for short-term use.
2. Use to inhibit non-storm water flow.
3. Allow for proper maintenance and cleanup.
4. Bags must be removed after adjacent operation is completed
5. Not applicable in areas with high silts and clays without filter fabric.

DI PROTECTION TYPE 3
NOT TO SCALE

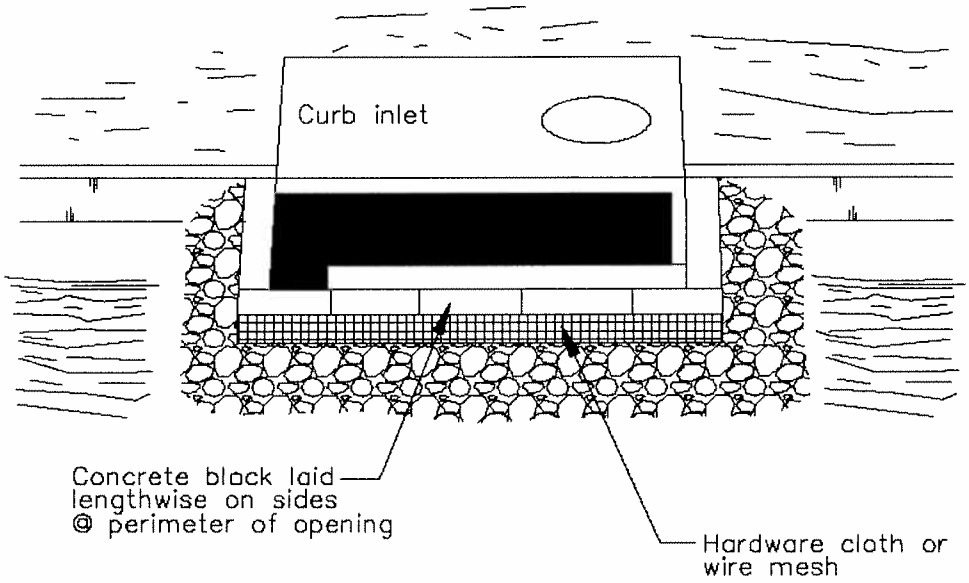

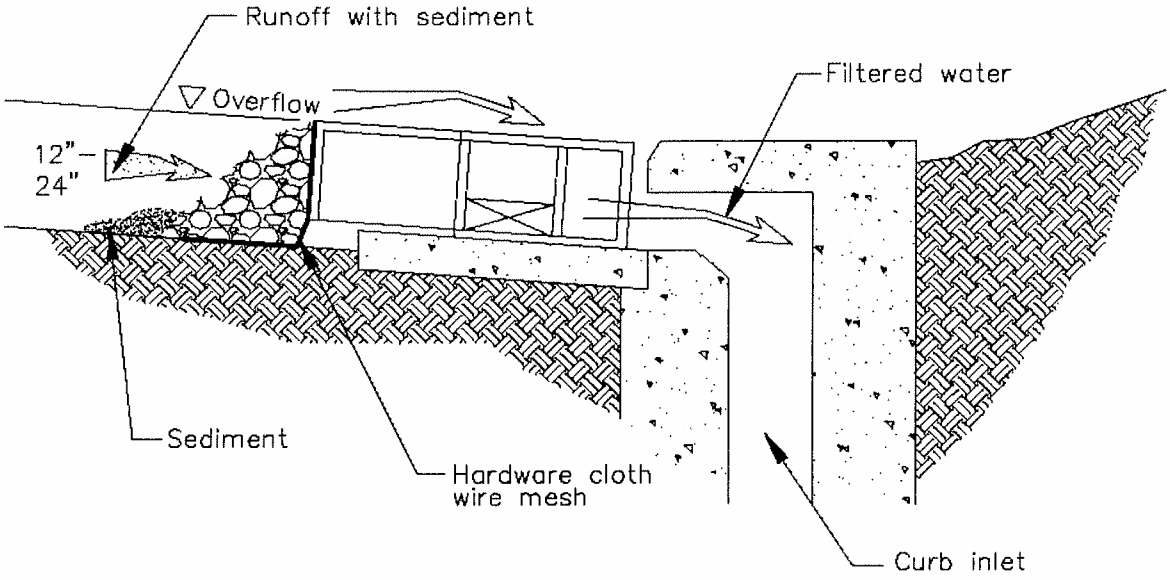

DI PROTECTION – TYPE 4

NOT TO SCALE

Sediment Trap SE-3

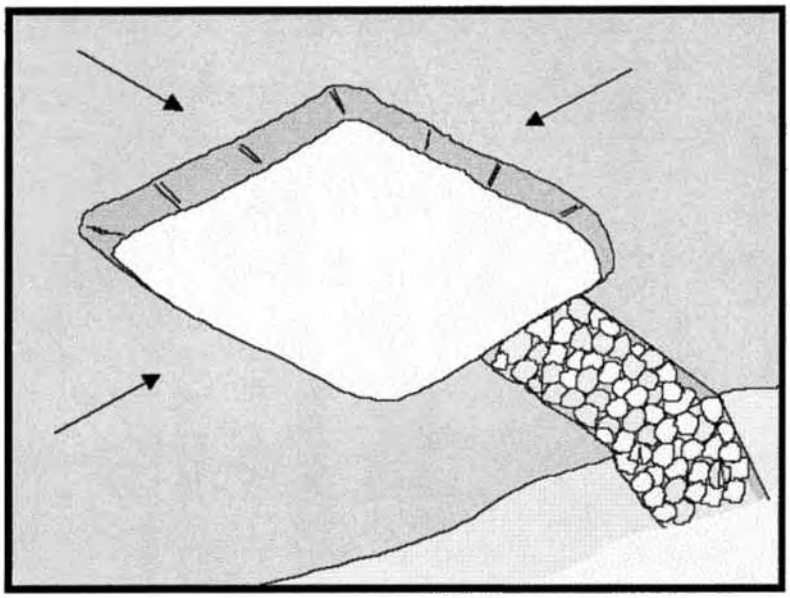

Objectives

EC	Erosion Control	
SE	Sediment Control	☑
TR	Tracking Control	
WE	Wind Erosion Control	
NS	Non-Stormwater Management Control	
WM	Waste Management and Materials Pollution Control	

Legend:

☑ Primary Objective

☒ Secondary Objective

Targeted Constituents

Sediment	☑
Nutrients	
Trash	☑
Metals	
Bacteria	
Oil and Grease	
Organics	

Potential Alternatives

SE-2 Sediment Basin (for larger areas)

Description and Purpose

A sediment trap is a containment area where sediment-laden runoff is temporarily detained under quiescent conditions, allowing sediment to settle out or before the runoff is discharged. Sediment traps are formed by excavating or constructing an earthen embankment across a waterway or low drainage area.

Suitable Applications

Sediment traps should be considered for use:

- At the perimeter of the site at locations where sediment-laden runoff is discharged offsite.
- At multiple locations within the project site where sediment control is needed.
- Around or upslope from storm drain inlet protection measures.
- Sediment traps may be used on construction projects where the drainage area is less than 5 acres. Traps would be placed where sediment-laden stormwater may enter a storm drain or watercourse. SE-2, Sediment Basins, must be used for drainage areas greater than 5 acres.
- As a supplemental control, sediment traps provide additional protection for a water body or for reducing sediment before it enters a drainage system.

Limitations

- Requires large surface areas to permit infiltration and settling of sediment.
- Not appropriate for drainage areas greater than 5 acres.
- Only removes large and medium sized particles and requires upstream erosion control.
- Attractive and dangerous to children, requiring protective fencing.
- Conducive to vector production.
- Should not be located in live streams.

Implementation

Design

A sediment trap is a small temporary ponding area, usually with a gravel outlet, formed by excavation or by construction of an earthen embankment. Its purpose is to collect and store sediment from sites cleared or graded during construction. It is intended for use on small drainage areas with no unusual drainage features and projected for a quick build-out time. It should help in removing coarse sediment from runoff. The trap is a temporary measure with a design life of approximately six months to one year and is to be maintained until the site area is permanently protected against erosion by vegetation and/or structures.

Sediment traps should be used only for small drainage areas. If the contributing drainage area is greater than 5 acres, refer to SE-2, Sediment Basins, or subdivide the catchment area into smaller drainage basins.

Sediment usually must be removed from the trap after each rainfall event. The SWPPP should detail how this sediment is to be disposed of, such as in fill areas onsite, or removal to an approved offsite dump. Sediment traps used as perimeter controls should be installed before any land disturbance takes place in the drainage area.

Sediment traps are usually small enough that a failure of the structure would not result in a loss of life, damage to home or buildings, or interruption in the use of public roads or utilities. However, sediment traps are attractive to children and can be dangerous. The following recommendations should be implemented to reduce risks:

- Install continuous fencing around the sediment trap or pond. Consult local ordinances regarding requirements for maintaining health and safety.
- Restrict basin side slopes to 3:1 or flatter.

Sediment trap size depends on the type of soil, size of the drainage area, and desired sediment removal efficiency (see SE-2, Sediment Basin). As a rule of thumb, the larger the basin volume the greater the sediment removal efficiency. Sizing criteria are typically established under the local grading ordinance or equivalent. The runoff volume from a 2-year storm is a common design criteria for a sediment trap. The sizing criteria below assume that this runoff volume is 0.042 acre-ft/acre (0.5 in. of runoff). While the climatic, topographic, and soil type extremes make it difficult to establish a statewide standard, the following criteria should trap moderate to high amounts of sediment in most areas of California:

- Locate sediment traps as near as practical to areas producing the sediment.
- Trap should be situated according to the following criteria: (1) by excavating a suitable area or where a low embankment can be constructed across a swale, (2) where failure would not cause loss of life or property damage, and (3) to provide access for maintenance, including sediment removal and sediment stockpiling in a protected area.
- Trap should be sized to accommodate a settling zone and sediment storage zone with recommended minimum volumes of 67 yd^3/acre and 33 yd^3/acre of contributing drainage area, respectively, based on 0.5 in. of runoff volume over a 24-hour period. In many cases, the size of an individual trap is limited by available space. Multiple traps or additional volume may be required to accommodate specific rainfall, soil, and site conditions.
- Traps with an impounding levee greater than 4.5 ft tall, measured from the lowest point to the impounding area to the highest point of the levee, and traps capable of impounding more than 35,000 ft^3, should be designed by a Registered Civil Engineer. The design should include maintenance requirements, including sediment and vegetation removal, to ensure continuous function of the trap outlet and bypass structures.
- The outlet pipe or open spillway must be designed to convey anticipated peak flows.
- Use rock or vegetation to protect the trap outlets against erosion.
- Fencing should be provided to prevent unauthorized entry.

Installation

Sediment traps can be constructed by excavating a depression in the ground or creating an impoundment with a small embankment. Sediment traps should be installed outside the area being graded and should be built prior to the start of the grading activities or removal of vegetation. To minimize the area disturbed by them, sediment traps should be installed in natural depressions or in small swales or drainage ways. The following steps must be followed during installation:

- The area under the embankment must be cleared, grubbed, and stripped of any vegetation and root mat. The pool area should be cleared.
- The fill material for the embankment must be free of roots or other woody vegetation as well as oversized stones, rocks, organic material, or other objectionable material. The embankment may be compacted by traversing with equipment while it is being constructed.
- All cut-and-fill slopes should be 3:1 or flatter.
- When a riser is used, all pipe joints must be watertight.
- When a riser is used, at least the top two-thirds of the riser should be perforated with 0.5 in. diameter holes spaced 8 in. vertically and 10 to 12 in. horizontally. See SE-2, Sediment Basin.
- When an earth or stone outlet is used, the outlet crest elevation should be at least 1 ft below the top of the embankment.

- When crushed stone outlet is used, the crushed stone used in the outlet should meet AASHTO M43, size No. 2 or 24, or its equivalent such as MSHA No. 2. Gravel meeting the above gradation may be used if crushed stone is not available.

Costs

Average annual cost per installation and maintenance (18 month useful life) is $0.73 per ft^3 ($1,300 per drainage acre). Maintenance costs are approximately 20% of installation costs.

Inspection and Maintenance

- Inspect BMPs prior to forecast rain, daily during extended rain events, after rain events, weekly during the rainy season, and at two-week intervals during the non-rainy season.
- Inspect outlet area for erosion and stabilize if required.
- Inspect trap banks for seepage and structural soundness, repair as needed.
- Inspect outlet structure and spillway for any damage or obstructions. Repair damage and remove obstructions as needed.
- Inspect fencing for damage and repair as needed.
- Inspect the sediment trap for area of standing water during every visit. Corrective measures should be taken if the BMP does not dewater completely in 72 hours or less to prevent vector production.
- Sediment that accumulates in the BMP must be periodically removed in order to maintain BMP effectiveness. Sediment should be removed when the sediment accumulation reaches one-third of the trap capacity. Sediment removed during maintenance may be incorporated into earthwork on the site or disposed of at an appropriate location.
- Remove vegetation from the sediment trap when first detected to prevent pools of standing water and subsequent vector production.
- BMPs that require dewatering shall be continuously attended while dewatering takes place. Dewatering BMPs shall be implemented at all times during dewatering activities.

References

Brown, W., and T. Schueler. The Economics of Stormwater BMPs in the Mid-Atlantic Region. Prepared for Chesapeake Research Consortium, Edgewater, MD, by the Center for Watershed Protection, Ellicott City, MD, 1997.

Draft – Sedimentation and Erosion Control, an Inventory of Current Practices, USEPA, April 1990.

Manual of Standards of Erosion and Sediment Control Measures, Association of Bay Area Governments, May 1995.

Metzger, M.E., D.F. Messer, C.L. Beitia, C.M. Myers, and V.L. Kramer, The Dark Side of Stormwater Runoff Management: Disease Vectors Associated with Structural BMPs, 2002.

National Management Measures to Control Nonpoint Source Pollution from Urban Areas, United States Environmental Protection Agency, 2002.

Proposed Guidance Specifying Management Measures for Sources of Nonpoint Pollution in Coastal Waters, Work Group-Working Paper, USEPA, April 1992.

Stormwater Quality Handbooks - Construction Site Best Management Practices (BMPs) Manual, State of California Department of Transportation (Caltrans), November 2000.

Stormwater Management Manual for The Puget Sound Basin, Washington State Department of Ecology, Public Review Draft, 1991.

U.S. Environmental Protection Agency (USEPA). Guidance Specifying Management Measures for Nonpoint Pollution in Coastal Waters. EPA 840-B-9-002. U.S. Environmental Protection Agency, Office of Water, Washington, DC, 1993.

Water Quality Management Plan for the Lake Tahoe Region, Volume II, Handbook of Management Practices, Tahoe Regional Planning Agency, November 1988.

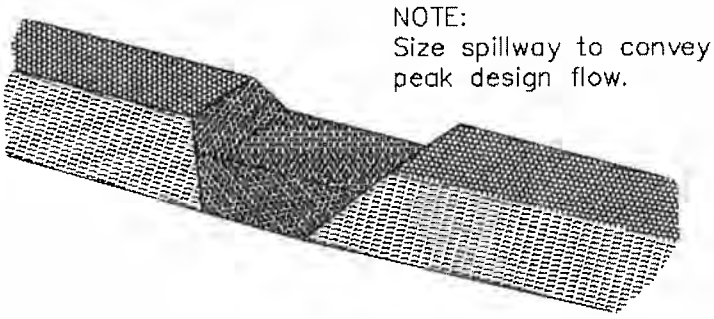

TYPICAL OPEN SPILLWAY

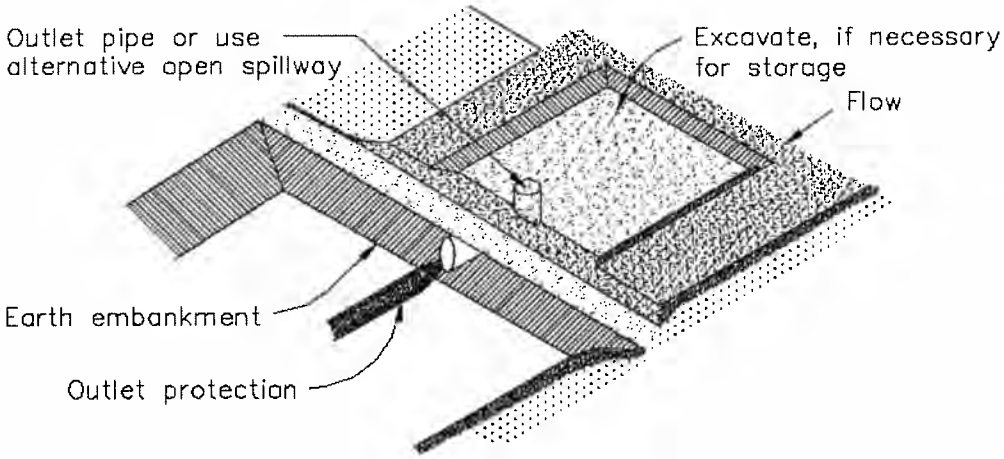

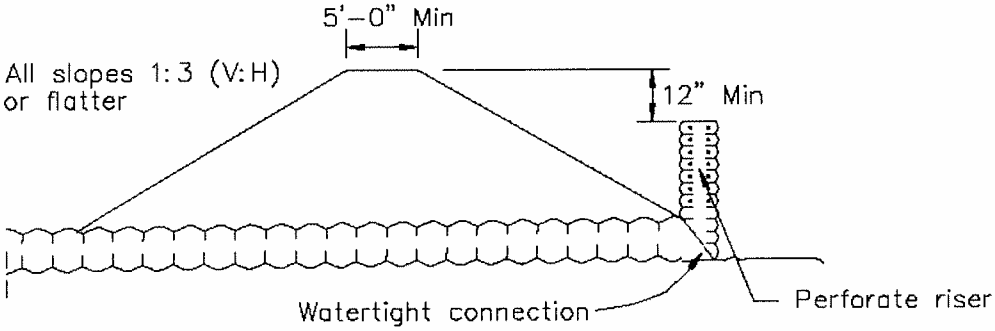

EMBANKMENT SECTION THRU RISER

TYPICAL SEDIMENT TRAP
NOT TO SCALE

Check Dams

SE-4

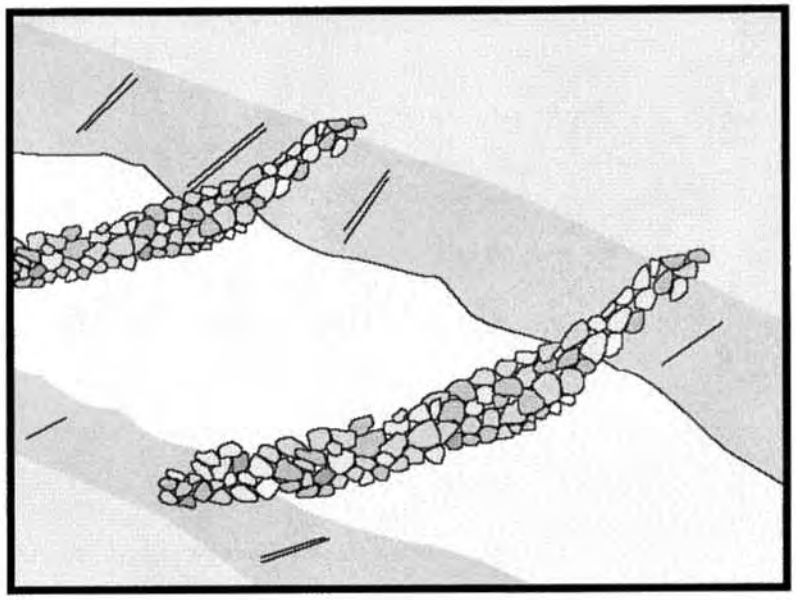

Objectives

EC	Erosion Control	☒
SE	Sediment Control	☑
TR	Tracking Control	
WE	Wind Erosion Control	
NS	Non-Stormwater Management Control	
WM	Waste Management and Materials Pollution Control	

Legend:

☑ Primary Objective

☒ Secondary Objective

Targeted Constituents

Sediment	☑
Nutrients	
Trash	
Metals	
Bacteria	
Oil and Grease	
Organics	

Potential Alternatives

SE-5 Fiber Rolls

SE-6 Gravel Bag Berm

SE-8 Sandbag Barrier

Description and Purpose

A check dam is a small barrier constructed of rock, gravel bags, sandbags, fiber rolls, or reusable products, placed across a constructed swale or drainage ditch. Check dams reduce the effective slope of the channel, thereby reducing the velocity of flowing water, allowing sediment to settle and reducing erosion.

Suitable Applications

Check dams may be appropriate in the following situations:

- To promote sedimentation behind the dam.
- To prevent erosion by reducing the velocity of channel flow in small intermittent channels and temporary swales.
- In small open channels that drain 10 acres or less.
- In steep channels where stormwater runoff velocities exceed 5 ft/s.
- During the establishment of grass linings in drainage ditches or channels.
- In temporary ditches where the short length of service does not warrant establishment of erosion-resistant linings.

Limitations

- Not to be used in live streams or in channels with extended base flows.

- Not appropriate in channels that drain areas greater than 10 acres.
- Not appropriate in channels that are already grass-lined unless erosion is expected, as installation may damage vegetation.
- Require extensive maintenance following high velocity flows.
- Promotes sediment trapping which can be re-suspended during subsequent storms or removal of the check dam.

Implementation

General

Check dams reduce the effective slope and create small pools in swales and ditches that drain 10 acres or less. Reduced slopes reduce the velocity of stormwater flows, thus reducing erosion of the swale or ditch and promoting sedimentation. Use of check dams for sedimentation will likely result in little net removal of sediment because of the small detention time and probable scour during longer storms. Using a series of check dams will generally increase their effectiveness. A sediment trap (SE-3) may be placed immediately upstream of the check dam to increase sediment removal efficiency.

Design and Layout

Check dams work by decreasing the effective slope in ditches and swales. An important consequence of the reduced slope is a reduction in capacity of the ditch or swale. This reduction in capacity must be considered when using this BMP, as reduced capacity can result in overtopping of the ditch or swale and resultant consequences. In some cases, such as a "permanent" ditch or swale being constructed early and used as a "temporary" conveyance for construction flows, the ditch or swale may have sufficient capacity such that the temporary reduction in capacity due to check dams is acceptable. When check dams reduce capacities beyond acceptable limits, there are several options:

- Don't use check dams. Consider alternative BMPs.
- Increase the size of the ditch or swale to restore capacity.

Maximum slope and velocity reduction is achieved when the toe of the upstream dam is at the same elevation as the top of the downstream dam. The center section of the dam should be lower than the edge sections so that the check dam will direct flows to the center of the ditch or swale.

Check dams are usually constructed of rock, gravel bags, sandbags, and fiber rolls. A number of products manufactured specifically for use as check dams are also being used, and some of these products can be removed and reused. Check dams can also be constructed of logs or lumber, and have the advantage of a longer lifespan when compared to gravel bags, sandbags, and fiber rolls. Straw bales can also be used for check dams and can work if correctly installed; but in practice, straw bale check dams have a high failure rate. Check dams should not be constructed from straw bales or silt fences, since concentrated flows quickly wash out these materials.

Rock check dams are usually constructed of 8 to 12 in. rock. The rock is placed either by hand or mechanically, but never just dumped into the channel. The dam must completely span the ditch

or swale to prevent washout. The rock used must be large enough to stay in place given the expected design flow through the channel.

Log check dams are usually constructed of 4 to 6 in. diameter logs. The logs should be embedded into the soil at least 18 in. Logs can be bolted or wired to vertical support logs that have been driven or buried into the soil.

Gravel bag and sandbag check dams are constructed by stacking bags across the ditch or swale, shaped as shown in the drawings at the end of this fact sheet.

Manufactured products should be installed in accordance with the manufacturer's instructions.

If grass is planted to stabilize the ditch or swale, the check dam should be removed when the grass has matured (unless the slope of the swales is greater than 4%).

The following guidance should be followed for the design and layout of check dams:

- Install the first check dam approximately 16 ft from the outfall device and at regular intervals based on slope gradient and soil type.
- Check dams should be placed at a distance and height to allow small pools to form between each check dam.
- Backwater from a downstream check dam should reach the toes of the upstream check dam.
- A sediment trap provided immediately upstream of the check dam will help capture sediment. Due to the potential for this sediment to be resuspended in subsequent storms, the sediment trap must be cleaned following each storm event.
- High flows (typically a 2-year storm or larger) should safely flow over the check dam without an increase in upstream flooding or damage to the check dam.
- Where grass is used to line ditches, check dams should be removed when grass has matured sufficiently to protect the ditch or swale.
- Gravel bags may be used as check dams with the following specifications:

Materials

Gravel bags used for check dams should conform to the requirements of SE-6, Gravel Bag Berms. Sandbags used for check dams should conform to SE-8, Sandbag Barrier. Fiber rolls used for check dams should conform to SE-5, Fiber Rolls. Straw bales used for check dams should conform to SE-9, Straw Bale Barrier.

Installation

- Rock should be placed individually by hand or by mechanical methods (no dumping of rock) to achieve complete ditch or swale coverage.
- Tightly abut bags and stack according to detail shown in the figure at the end of this section. Gravel bags and sandbags should not be stacked any higher than 3 ft.
- Fiber rolls and straw bales must be trenched in and firmly staked in place.

Costs

Cost consists of only installation costs if materials are readily available. If material must be imported, costs may increase. For material costs, see SE-5, SE-6, SE-8 and SE-9.

Inspection and Maintenance

- Inspect BMPs prior to forecast rain, daily during extended rain events, after rain events, weekly during the rainy season, and at two-week intervals during the non-rainy season.
- Replace missing rock, bags, bales, etc. Replace bags or bales that have degraded or have become damaged.
- If the check dam is used as a sediment capture device, sediment that accumulates in the BMP must be periodically removed in order to maintain BMP effectiveness. Sediment should be removed when the sediment accumulation reaches one-third of the barrier height. Sediment removed during maintenance may be incorporated into earthwork on the site or disposed at an appropriate location.
- If the check dam is used as a grade control structure, sediment removal is not required as long as the system continues to control the grade.
- Remove accumulated sediment prior to permanent seeding or soil stabilization.
- Remove check dam and accumulated sediment when check dams are no longer needed.

References

Draft – Sedimentation and Erosion Control, and Inventory of Current Practices, USEPA, April 1990.

Manual of Standards of Erosion and Sediment Control Measures, Association of Bay Area Governments, May 1995.

Stormwater Quality Handbooks - Construction Site Best Management Practices (BMPs) Manual, State of California Department of Transportation (Caltrans), November 2000.

Stormwater Management of the Puget Sound Basin, Technical Manual, Publication #91-75, Washington State Department of Ecology, February 1992.

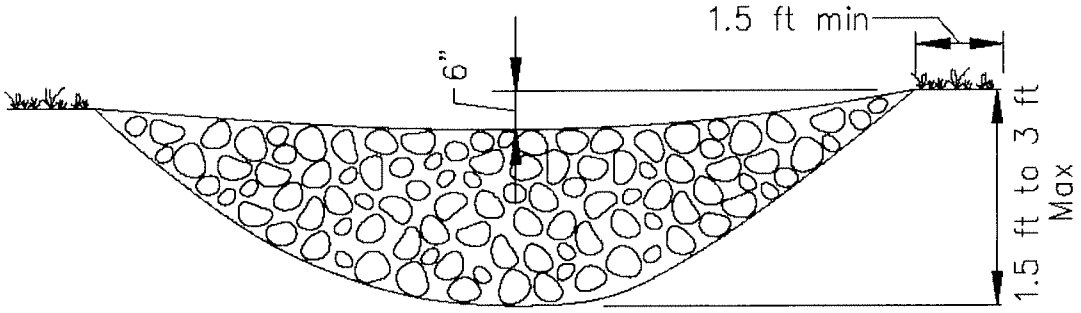

ELEVATION

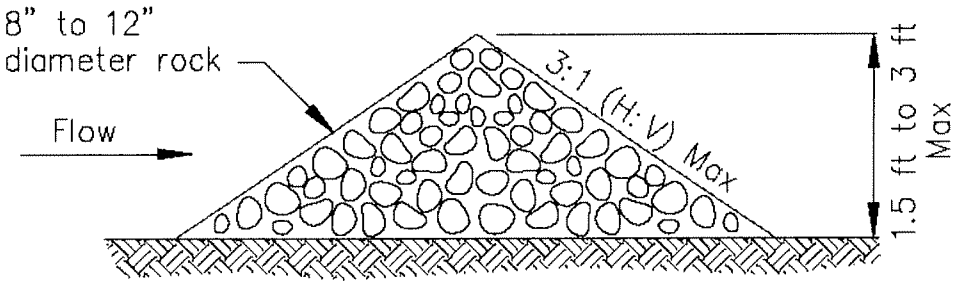

TYPICAL ROCK CHECK DAM SECTION

ROCK CHECK DAM
NOT TO SCALE

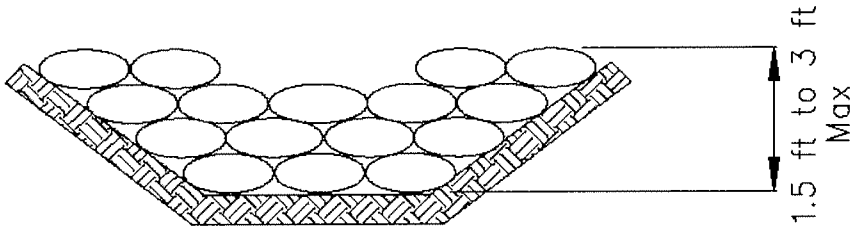

GRAVEL BAG CHECK DAM ELEVATION
NOT TO SCALE

Street Sweeping and Vacuuming SE-7

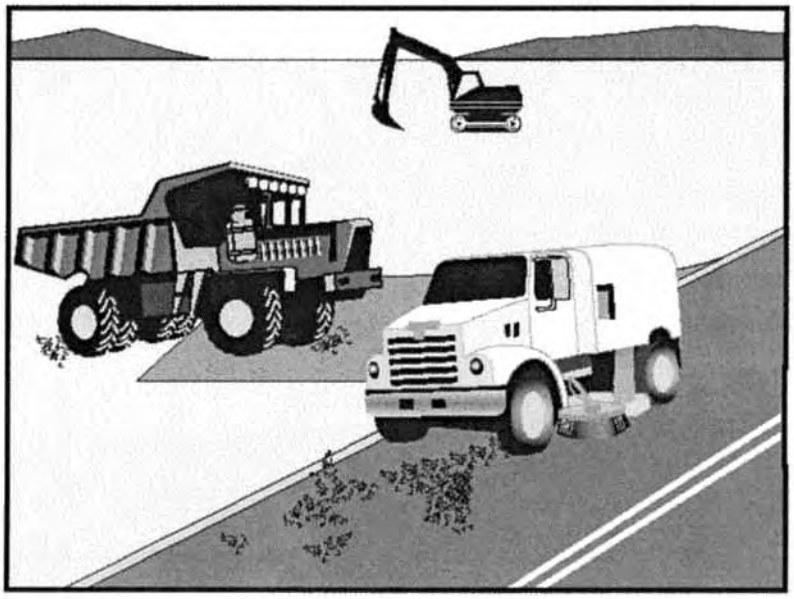

Objectives

EC	Erosion Control	
SE	Sediment Control	☒
TR	Tracking Control	☑
WE	Wind Erosion Control	
NS	Non-Stormwater Management Control	
WM	Waste Management and Materials Pollution Control	

Legend:

☑ Primary Objective

☒ Secondary Objective

Targeted Constituents

Sediment	☑
Nutrients	
Trash	☑
Metals	
Bacteria	
Oil and Grease	☑
Organics	

Potential Alternatives

None

Description and Purpose

Street sweeping and vacuuming includes use of self-propelled and walk-behind equipment to remove sediment from streets and roadways, and to clean paved surfaces in preparation for final paving. Sweeping and vacuuming prevents sediment from the project site from entering storm drains or receiving waters.

Suitable Applications

Sweeping and vacuuming are suitable anywhere sediment is tracked from the project site onto public or private paved streets and roads, typically at points of egress. Sweeping and vacuuming are also applicable during preparation of paved surfaces for final paving.

Limitations

Sweeping and vacuuming may not be effective when sediment is wet or when tracked soil is caked (caked soil may need to be scraped loose).

Implementation

- Controlling the number of points where vehicles can leave the site will allow sweeping and vacuuming efforts to be focused, and perhaps save money.
- Inspect potential sediment tracking locations daily.
- Visible sediment tracking should be swept or vacuumed on a daily basis.

- Do not use kick brooms or sweeper attachments. These tend to spread the dirt rather than remove it.
- If not mixed with debris or trash, consider incorporating the removed sediment back into the project

Costs

Rental rates for self-propelled sweepers vary depending on hopper size and duration of rental. Expect rental rates from $58/hour (3 yd^3 hopper) to $88/hour (9 yd^3 hopper), plus operator costs. Hourly production rates vary with the amount of area to be swept and amount of sediment. Match the hopper size to the area and expect sediment load to minimize time spent dumping.

Inspection and Maintenance

- Inspect BMPs prior to forecast rain, daily during extended rain events, after rain events, weekly during the rainy season, and at two-week intervals during the non-rainy season.
- When actively in use, points of ingress and egress must be inspected daily.
- When tracked or spilled sediment is observed outside the construction limits, it must be removed at least daily. More frequent removal, even continuous removal, may be required in some jurisdictions.
- Be careful not to sweep up any unknown substance or any object that may be potentially hazardous.
- Adjust brooms frequently; maximize efficiency of sweeping operations.
- After sweeping is finished, properly dispose of sweeper wastes at an approved dumpsite.

References

Stormwater Quality Handbooks - Construction Site Best Management Practices (BMPs) Manual, State of California Department of Transportation (Caltrans), November 2000.

Labor Surcharge and Equipment Rental Rates, State of California Department of Transportation (Caltrans), April 1, 2002 – March 31, 2003.

Straw Bale Barrier SE-9

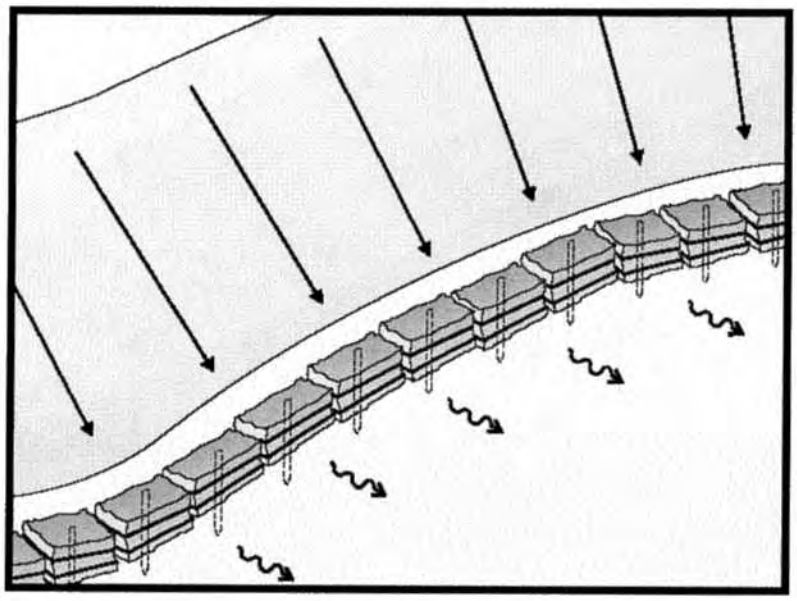

Objectives

EC	Erosion Control	☒
SE	Sediment Control	☑
TR	Tracking Control	
WE	Wind Erosion Control	
NS	Non-Stormwater Management Control	
WM	Waste Management and Materials Pollution Control	

Legend:
☑ Primary Objective
☒ Secondary Objective

Targeted Constituents

Sediment	☑
Nutrients	
Trash	
Metals	
Bacteria	
Oil and Grease	
Organics	

Potential Alternatives

SE-1 Silt Fence
SE-5 Fiber Rolls
SE-6 Gravel Bag Berm
SE-8 Sandbag Barrier

Description and Purpose

A straw bale barrier is a series of straw bales placed on a level contour to intercept sheet flows. Straw bale barriers pond sheet- flow runoff, allowing sediment to settle out.

Suitable Applications

Straw bale barriers may be suitable:

- As a linear sediment control measure:
  - Below the toe of slopes and erodible slopes
  - As sediment traps at culvert/pipe outlets
  - Below other small cleared areas
  - Along the perimeter of a site
  - Down slope of exposed soil areas
  - Around temporary stockpiles and spoil areas
  - Parallel to a roadway to keep sediment off paved areas
  - Along streams and channels
- As linear erosion control measure:
  - Along the face and at grade breaks of exposed and erodible slopes to shorten slope length and spread runoff as sheet flow

- At the top of slopes to divert runoff away from disturbed slopes
- As check dams across mildly sloped construction roads

Limitations

Straw bale barriers:

- Are not to be used for extended periods of time because they tend to rot and fall apart
- Are suitable only for sheet flow on slopes of 10 % or flatter
- Are not appropriate for large drainage areas, limit to one acre or less
- May require constant maintenance due to rotting
- Are not recommended for concentrated flow, inlet protection, channel flow, and live streams
- Cannot be made of bale bindings of jute or cotton
- Require labor-intensive installation and maintenance
- Cannot be used on paved surfaces
- Should not to be used for drain inlet protection
- Should not be used on lined ditches
- May introduce undesirable non-native plants to the area

Implementation

General

A straw bale barrier consists of a row of straw bales placed on a level contour. When appropriately placed, a straw bale barrier intercepts and slows sheet flow runoff, causing temporary ponding. The temporary ponding provides quiescent conditions allowing sediment to settle. Straw bale barriers also interrupt the slope length and thereby reduce erosion by reducing the tendency of sheet flows to concentrate into rivulets, which erode rills, and ultimately gullies, into disturbed, sloped soils.

Straw bale barriers have not been as effective as expected due to improper use. These barriers have been placed in streams and drainage ways where runoff volumes and velocities have caused the barriers to wash out. In addition, failure to stake and entrench the straw bale has allowed undercutting and end flow. Use of straw bale barriers in accordance with this BMP should produce acceptable results.

Design and Layout

- Locate straw bale barriers on a level contour.
  - Slopes up to 10:1 (H:V): Straw bales should be placed at a maximum interval of 50 ft (a closer spacing is more effective), with the first row near the toe of slope.
  - Slopes greater than 10:1 (H:V): Not recommended.

- Turn the ends of the straw bale barrier up slope to prevent runoff from going around the barrier.
- Allow sufficient space up slope from the barrier to allow ponding, and to provide room for sediment storage.
- For installation near the toe of the slope, consider moving the barrier away from the slope toe to facilitate cleaning. To prevent flow behind the barrier, sand bags can be placed perpendicular to the barrier to serve as cross barriers.
- Drainage area should not exceed 1 acre, or 0.25 acre per 100 ft of barrier.
- Maximum flow path to the barrier should be limited to 100 ft.
- Straw bale barriers should consist of two parallel rows.
  - Butt ends of bales tightly
  - Stagger butt joints between front and back row
  - Each row of bales must be trenched in and firmly staked
- Straw bale barriers are limited in height to one bale laid on its side.
- Anchor bales with either two wood stakes or four bars driven through the bale and into the soil. Drive the first stake towards the butt joint with the adjacent bale to force the bales together.
- See attached figure for installation details.

Materials

- ***Straw Bale Size:*** Each straw bale should be a minimum of 14 in. wide, 18 in. in height, 36 in. in length and should have a minimum mass of 50 lbs. The straw bale should be composed entirely of vegetative matter, except for the binding material.
- ***Bale Bindings:*** Bales should be bound by steel wire, nylon or polypropylene string placed horizontally. Jute and cotton binding should not be used. Baling wire should be a minimum diameter of 14 gauge. Nylon or polypropylene string should be approximately 12 gauge in diameter with a breaking strength of 80 lbs force.
- ***Stakes:*** Wood stakes should be commercial quality lumber of the size and shape shown on the plans. Each stake should be free from decay, splits or cracks longer than the thickness of the stake, or other defects that would weaken the stakes and cause the stakes to be structurally unsuitable. Steel bar reinforcement should be equal to a #4 designation or greater. End protection should be provided for any exposed bar reinforcement.

Costs

Straw bales cost $5 - $7 each. Adequate labor should be budgeted for installation and maintenance.

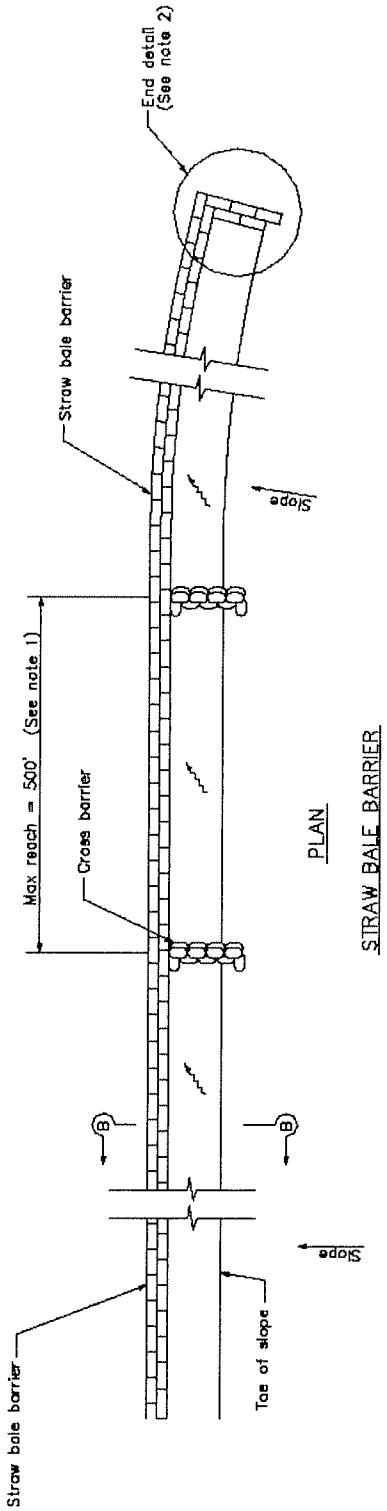

PLAN

STRAW BALE BARRIER

LEGEND

DIRECTION OF FLOW

NOTES

1. Construct the length of each reach so that the change in base elevation along the reach does not exceed 1/2 the height of the linear barrier. In no case shall the reach length exceed 500'.
2. The end of barrier shall be turned up slope.
3. Dimension may vary to fit field condition.
4. Stake dimensions are nominal.
5. Place straw bales tightly together.
6. Tamp embedment spoils against sides of installed bales.
7. Drive angled wood stake before vertical stake to ensure tight abutment to adjacent bale.
8. Sandbag cross barriers should be a min of 1/2 and a max of 2/3 the height of the linear barrier.
9. Sandbag rows and layers should be offset to eliminate gaps.

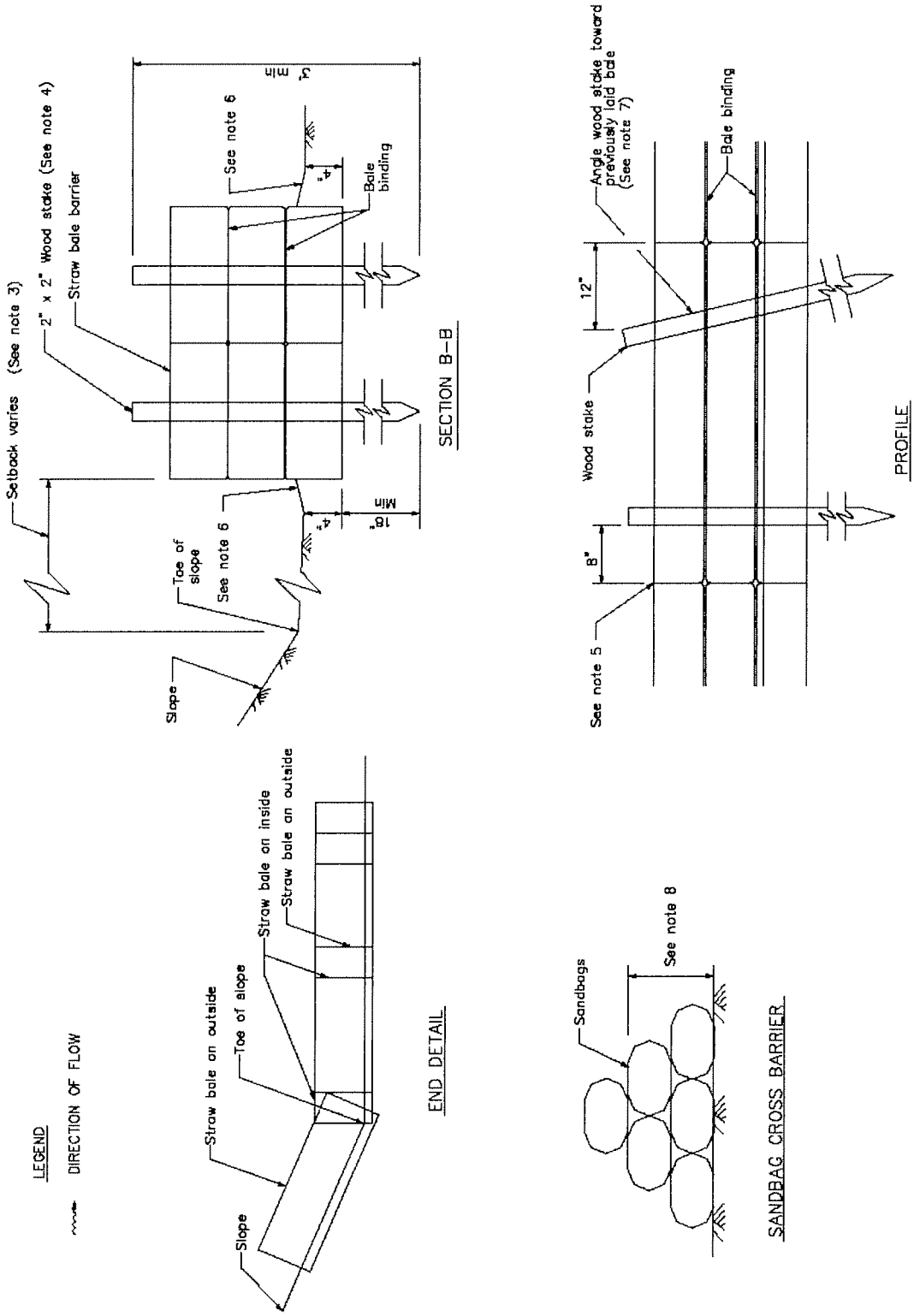
Setback varies (See note 3)
2" x 2" Wood stake (See note 4)
Straw bale barrier
See note 6
4"
Bale binding
4'
Min
Toe of slope
See note 6
4"
10"
Min
Slope
SECTION B-B
Angle wood stake toward previously laid bale (See note 7)
Bale binding
12"
Wood stake
8"
See note 5
PROFILE
LEGEND
DIRECTION OF FLOW
Straw bale on outside
Toe of slope
Straw bale on inside
Straw bale on outside
Slope
END DETAIL
Sandbags
See note 8
SANDBAG CROSS BARRIER

Stabilized Construction Entrance/Exit TC-1

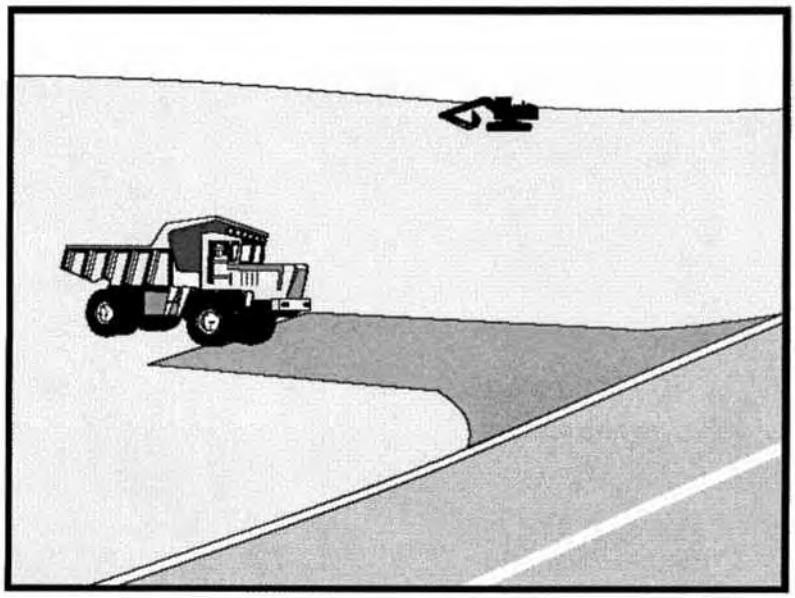

Objectives

EC	Erosion Control	☒
SE	Sediment Control	☒
TC	Tracking Control	☑
WE	Wind Erosion Control	
NS	Non-Stormwater Management Control	
WM	Waste Management and Materials Pollution Control	

Legend:

☑ Primary Objective

☒ Secondary Objective

Targeted Constituents

Sediment	☑
Nutrients	
Trash	
Metals	
Bacteria	
Oil and Grease	
Organics	

Potential Alternatives

None

Description and Purpose

A stabilized construction access is defined by a point of entrance/exit to a construction site that is stabilized to reduce the tracking of mud and dirt onto public roads by construction vehicles.

Suitable Applications

Use at construction sites:

- Where dirt or mud can be tracked onto public roads.
- Adjacent to water bodies.
- Where poor soils are encountered.
- Where dust is a problem during dry weather conditions.

Limitations

- Entrances and exits require periodic top dressing with additional stones.
- This BMP should be used in conjunction with street sweeping on adjacent public right of way.
- Entrances and exits should be constructed on level ground only.
- Stabilized construction entrances are rather expensive to construct and when a wash rack is included, a sediment trap of some kind must also be provided to collect wash water runoff.

Implementation

General

A stabilized construction entrance is a pad of aggregate underlain with filter cloth located at any point where traffic will be entering or leaving a construction site to or from a public right of way, street, alley, sidewalk, or parking area. The purpose of a stabilized construction entrance is to reduce or eliminate the tracking of sediment onto public rights of way or streets. Reducing tracking of sediments and other pollutants onto paved roads helps prevent deposition of sediments into local storm drains and production of airborne dust.

Where traffic will be entering or leaving the construction site, a stabilized construction entrance should be used. NPDES permits require that appropriate measures be implemented to prevent tracking of sediments onto paved roadways, where a significant source of sediments is derived from mud and dirt carried out from unpaved roads and construction sites.

Stabilized construction entrances are moderately effective in removing sediment from equipment leaving a construction site. The entrance should be built on level ground. Advantages of the Stabilized Construction Entrance/Exit is that it does remove some sediment from equipment and serves to channel construction traffic in and out of the site at specified locations. Efficiency is greatly increased when a washing rack is included as part of a stabilized construction entrance/exit.

Design and Layout

- Construct on level ground where possible.
- Select 3 to 6 in. diameter stones.
- Use minimum depth of stones of 12 in. or as recommended by soils engineer.
- Construct length of 50 ft minimum, and 30 ft minimum width.
- Rumble racks constructed of steel panels with ridges and installed in the stabilized entrance/exit will help remove additional sediment and to keep adjacent streets clean.
- Provide ample turning radii as part of the entrance.
- Limit the points of entrance/exit to the construction site.
- Limit speed of vehicles to control dust.
- Properly grade each construction entrance/exit to prevent runoff from leaving the construction site.
- Route runoff from stabilized entrances/exits through a sediment trapping device before discharge.
- Design stabilized entrance/exit to support heaviest vehicles and equipment that will use it.
- Select construction access stabilization (aggregate, asphaltic concrete, concrete) based on longevity, required performance, and site conditions. Do not use asphalt concrete (AC) grindings for stabilized construction access/roadway.

- If aggregate is selected, place crushed aggregate over geotextile fabric to at least 12 in. depth, or place aggregate to a depth recommended by a geotechnical engineer. A crushed aggregate greater than 3 in. but smaller than 6 in. should be used.
- Designate combination or single purpose entrances and exits to the construction site.
- Require that all employees, subcontractors, and suppliers utilize the stabilized construction access.
- Implement SE-7, Street Sweeping and Vacuuming, as needed.
- All exit locations intended to be used for more than a two-week period should have stabilized construction entrance/exit BMPs.

Inspection and Maintenance

- Inspect and verify that activity–based BMPs are in place prior to the commencement of associated activities. While activities associated with the BMPs are under way, inspect weekly during the rainy season and of two-week intervals in the non-rainy season to verify continued BMP implementation.
- Inspect local roads adjacent to the site daily. Sweep or vacuum to remove visible accumulated sediment.
- Remove aggregate, separate and dispose of sediment if construction entrance/exit is clogged with sediment.
- Keep all temporary roadway ditches clear.
- Check for damage and repair as needed.
- Replace gravel material when surface voids are visible.
- Remove all sediment deposited on paved roadways within 24 hours.
- Remove gravel and filter fabric at completion of construction

Costs

Average annual cost for installation and maintenance may vary from $1,200 to $4,800 each, averaging $2,400 per entrance. Costs will increase with addition of washing rack, and sediment trap. With wash rack, costs range from $1,200 - $6,000 each, averaging $3,600 per entrance.

References

Manual of Standards of Erosion and Sediment Control Measures, Association of Bay Area Governments, May 1995.

National Management Measures to Control Nonpoint Source Pollution from Urban Areas, USEPA Agency, 2002.

Proposed Guidance Specifying Management Measures for Sources of Nonpoint Pollution in Coastal Waters, Work Group Working Paper, USEPA, April 1992.

Stormwater Quality Handbooks Construction Site Best Management Practices (BMPs) Manual, State of California Department of Transportation (Caltrans), November 2000.

Stormwater Management of the Puget Sound Basin, Technical Manual, Publication #91-75, Washington State Department of Ecology, February 1992.

Virginia Erosion and Sedimentation Control Handbook, Virginia Department of Conservation and Recreation, Division of Soil and Water Conservation, 1991.

Guidance Specifying Management Measures for Nonpoint Pollution in Coastal Waters, EPA 840-B-9-002, USEPA, Office of Water, Washington, DC, 1993.

Water Quality Management Plan for the Lake Tahoe Region, Volume II, Handbook of Management Practices, Tahoe Regional Planning Agency, November 1988.

Stabilized Construction Entrance/Exit TC-1

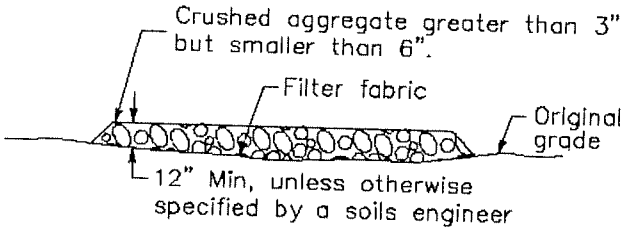

SECTION B–B
NTS

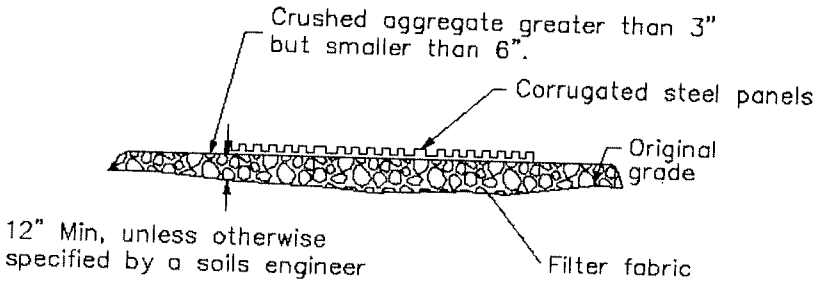

SECTION A–A
NOT TO SCALE

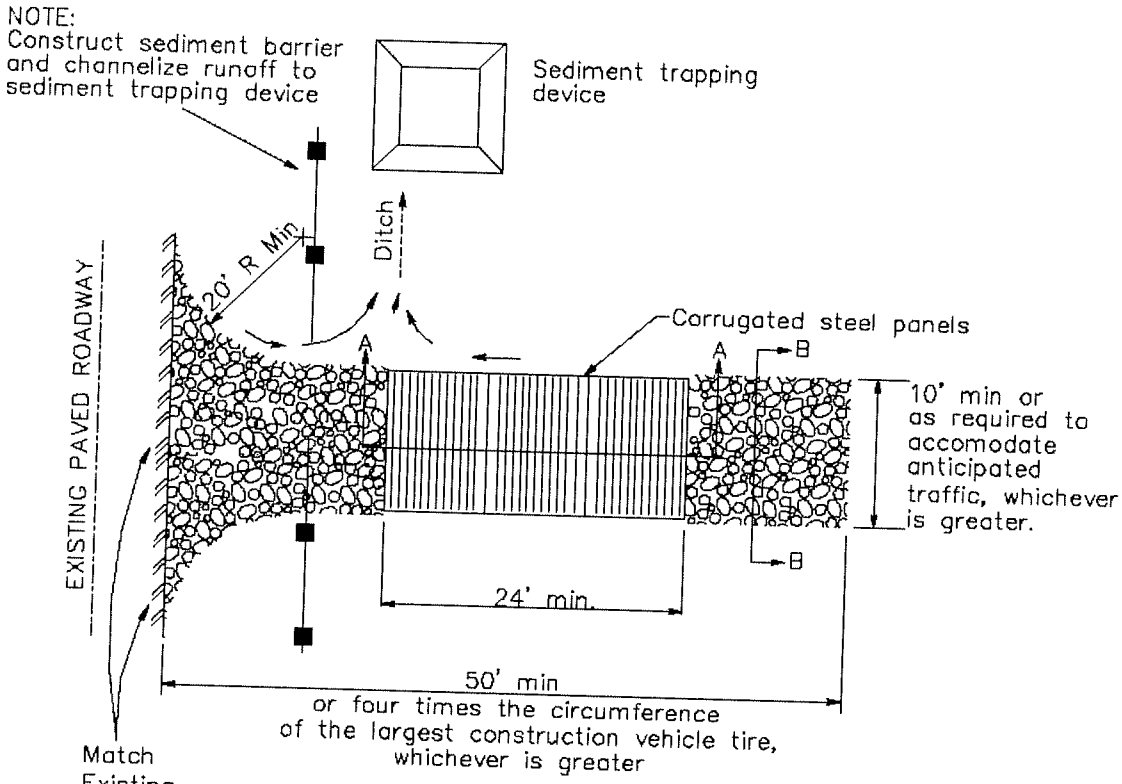

PLAN
NTS

Stabilized Construction Roadway TC-2

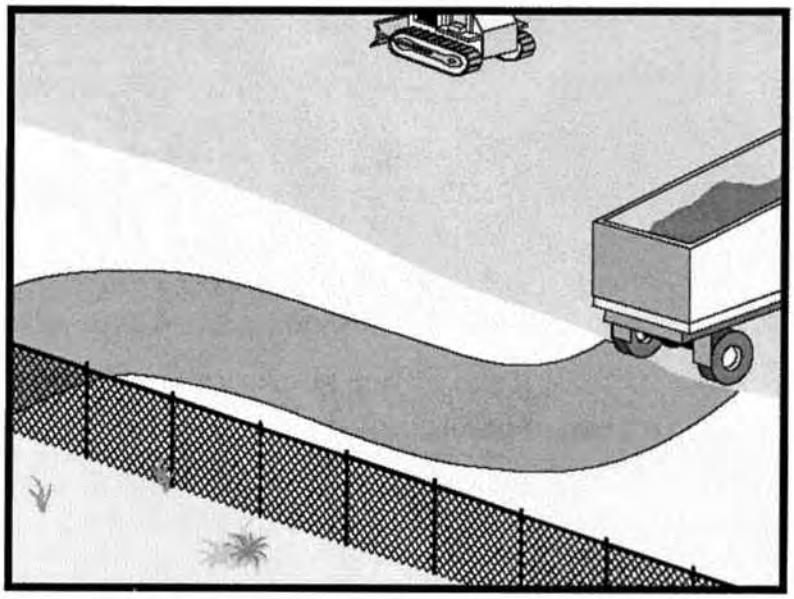

Objectives

EC	Erosion Control	☒
SE	Sediment Control	☒
TC	Tracking Control	☑
WE	Wind Erosion Control	
NS	Non-Stormwater Management Control	
WM	Waste Management and Materials Pollution Control	

Legend:

☑ Primary Objective

☒ Secondary Objective

Targeted Constituents

Sediment	☑
Nutrients	
Trash	
Metals	
Bacteria	
Oil and Grease	
Organics	

Potential Alternatives

None

Description and Purpose

Access roads, subdivision roads, parking areas, and other onsite vehicle transportation routes should be stabilized immediately after grading, and frequently maintained to prevent erosion and control dust.

Suitable Applications

This BMP should be applied for the following conditions:

- Temporary Construction Traffic:
  - Phased construction projects and offsite road access
  - Construction during wet weather
- Construction roadways and detour roads:
  - Where mud tracking is a problem during wet weather
  - Where dust is a problem during dry weather
  - Adjacent to water bodies
  - Where poor soils are encountered

Limitations

- The roadway must be removed or paved when construction is complete.

- Certain chemical stabilization methods may cause stormwater or soil pollution and should not be used. See WE-1, Wind Erosion Control.
- Management of construction traffic is subject to air quality control measures. Contact the local air quality management agency.
- Materials will likely need to be removed prior to final project grading and stabilization.
- Use of this BMP may not be applicable to very short duration projects.

Implementation

General

Areas that are graded for construction vehicle transport and parking purposes are especially susceptible to erosion and dust. The exposed soil surface is continually disturbed, leaving no opportunity for vegetative stabilization. Such areas also tend to collect and transport runoff waters along their surfaces. During wet weather, they often become muddy quagmires that generate significant quantities of sediment that may pollute nearby streams or be transported offsite on the wheels of construction vehicles. Dirt roads can become so unstable during wet weather that they are virtually unusable.

Efficient construction road stabilization not only reduces onsite erosion but also can significantly speed onsite work, avoid instances of immobilized machinery and delivery vehicles, and generally improve site efficiency and working conditions during adverse weather

Installation/Application Criteria

Permanent roads and parking areas should be paved as soon as possible after grading. As an alternative where construction will be phased, the early application of gravel or chemical stabilization may solve potential erosion and stability problems. Temporary gravel roadway should be considered during the rainy season and on slopes greater than 5%.

Temporary roads should follow the contour of the natural terrain to the maximum extent possible. Slope should not exceed 15%. Roadways should be carefully graded to drain transversely. Provide drainage swales on each side of the roadway in the case of a crowned section or one side in the case of a super elevated section. Simple gravel berms without a trench can also be used.

Installed inlets should be protected to prevent sediment laden water from entering the storm sewer system (SE-10, Storm Drain Inlet Protection). In addition, the following criteria should be considered.

- Road should follow topographic contours to reduce erosion of the roadway.
- The roadway slope should not exceed 15%.
- Chemical stabilizers or water are usually required on gravel or dirt roads to prevent dust (WE-1, Wind Erosion Control).
- Properly grade roadway to prevent runoff from leaving the construction site.
- Design stabilized access to support heaviest vehicles and equipment that will use it.

- Stabilize roadway using aggregate, asphalt concrete, or concrete based on longevity, required performance, and site conditions. The use of cold mix asphalt or asphalt concrete (AC) grindings for stabilized construction roadway is not allowed.
- Coordinate materials with those used for stabilized construction entrance/exit points.
- If aggregate is selected, place crushed aggregate over geotextile fabric to at least 12 in. depth. A crushed aggregate greater than 3 in. but smaller than 6 in. should be used.

Inspection and Maintenance

- Inspect and verify that activity–based BMPs are in place prior to the commencement of associated activities. While activities associated with the BMP are under way, impact weekly during the rainy season and of two-week intervals in the non-rainy season to verify continued BMP implementation.
- Keep all temporary roadway ditches clear.
- When no longer required, remove stabilized construction roadway and re-grade and repair slopes.
- Periodically apply additional aggregate on gravel roads.
- Active dirt construction roads are commonly watered three or more times per day during the dry season.

Costs

Gravel construction roads are moderately expensive, but cost is often balanced by reductions in construction delay. No additional costs for dust control on construction roads should be required above that needed to meet local air quality requirements.

References

Blueprint for a Clean Bay: Best Management Practices to Prevent Stormwater Pollution from Construction Related Activities; Santa Clara Valley Nonpoint Source Pollution Control Program, 1995.

Coastal Nonpoint Pollution Control Program; Program Development and Approval Guidance, Working Group, Working Paper; USEPA, April 1992.

Manual of Standards of Erosion and Sediment Control Measures, Association of Bay Area Governments, May 1995.

Stormwater Quality Handbooks Construction Site Best Management Practices (BMPs) Manual, State of California Department of Transportation (Caltrans), November 2000.

Stormwater Management for Construction Activities, Developing Pollution Prevention Plans and Best Management Practices, EPA 832-R-92005; USEPA, April 1992.

Stormwater Management of the Puget Sound Basin, Technical Manual, Publication #91-75, Washington State Department of Ecology, February 1992.

Virginia Erosion and Sedimentation Control Handbook, Virginia Department of Conservation and Recreation, Division of Soil and Water Conservation, 1991.

Water Quality Management Plan for the Lake Tahoe Region, Volume II, Handbook of Management Practices, Tahoe Regional Planning Agency, November 1988.

Entrance/Outlet Tire Wash TC-3

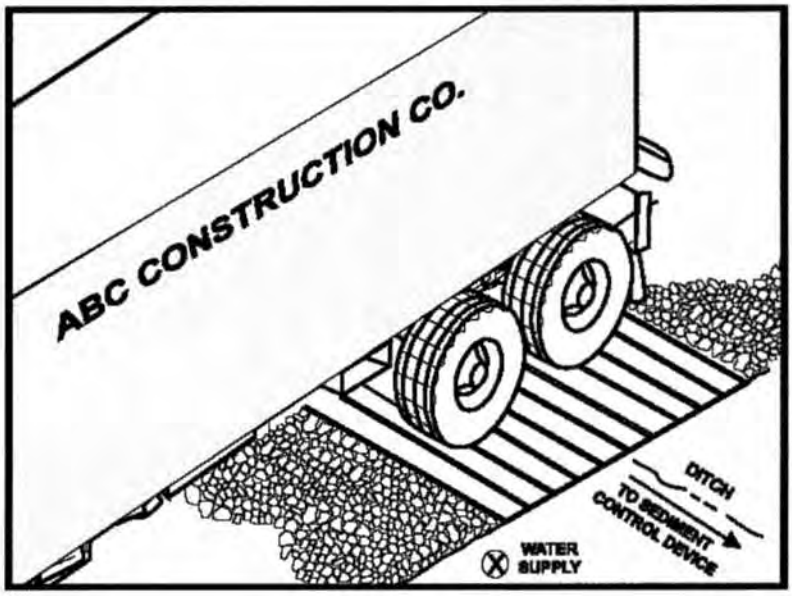

Objectives

EC	Erosion Control	
SE	Sediment Control	☒
TC	Tracking Control	☑
WE	Wind Erosion Control	
NS	Non-Stormwater Management Control	
WM	Waste Management and Materials Pollution Control	

Legend:

☑ Primary Objective

☒ Secondary Objective

Targeted Constituents

Sediment	☑
Nutrients	
Trash	
Metals	
Bacteria	
Oil and Grease	
Organics	

Potential Alternatives

TC-1 Stabilized Construction Entrance/Exit

Description and Purpose

A tire wash is an area located at stabilized construction access points to remove sediment from tires and under carriages and to prevent sediment from being transported onto public roadways.

Suitable Applications

Tire washes may be used on construction sites where dirt and mud tracking onto public roads by construction vehicles may occur.

Limitations

- The tire wash requires a supply of wash water.
- A turnout or doublewide exit is required to avoid having entering vehicles drive through the wash area.
- Do not use where wet tire trucks leaving the site leave the road dangerously slick.

Implementation

- Incorporate with a stabilized construction entrance/exit. See TC-1, Stabilized Construction Entrance/Exit.
- Construct on level ground when possible, on a pad of coarse aggregate greater than 3 in. but smaller than 6 in. A geotextile fabric should be placed below the aggregate.
- Wash rack should be designed and constructed/manufactured for anticipated traffic loads.

- Provide a drainage ditch that will convey the runoff from the wash area to a sediment trapping device. The drainage ditch should be of sufficient grade, width, and depth to carry the wash runoff.
- Use hoses with automatic shutoff nozzles to prevent hoses from being left on.
- Require that all employees, subcontractors, and others that leave the site with mud caked tires and undercarriages to use the wash facility.
- Implement SC-7, Street Sweeping and Vacuuming, as needed.

Costs

Costs are low for installation of wash rack.

Inspection and Maintenance

- Inspect and verify that activity–based BMPs are in place prior to the commencement of associated activities. While activities associated with the BMP are under way, inspect weekly during the rainy season and of two-week intervals in the non-rainy season to verify continued BMP implementation.
- Inspect BMPs subject to non-stormwater discharge daily while non-stormwater discharges occur.
- Remove accumulated sediment in wash rack and/or sediment trap to maintain system performance.
- Inspect routinely for damage and repair as needed.

References

Blueprint for a Clean Bay: Best Management Practices to Prevent Stormwater Pollution from Construction Related Activities; Santa Clara Valley Nonpoint Source Pollution Control Program, 1995.

Coastal Nonpoint Pollution Control Program; Program Development and Approval Guidance, Working Group, Working Paper; USEPA, April 1992.

Manual of Standards of Erosion and Sediment Control Measures, Association of Bay Area Governments, May 1995.

Stormwater Quality Handbooks Construction Site Best Management Practices (BMPs) Manual, State of California Department of Transportation (Caltrans), November 2000.

Stormwater Management for Construction Activities, Developing Pollution Prevention Plans and Best Management Practices, EPA 832-R-92005; USEPA, April 1992.

Wind Erosion Control WE-1

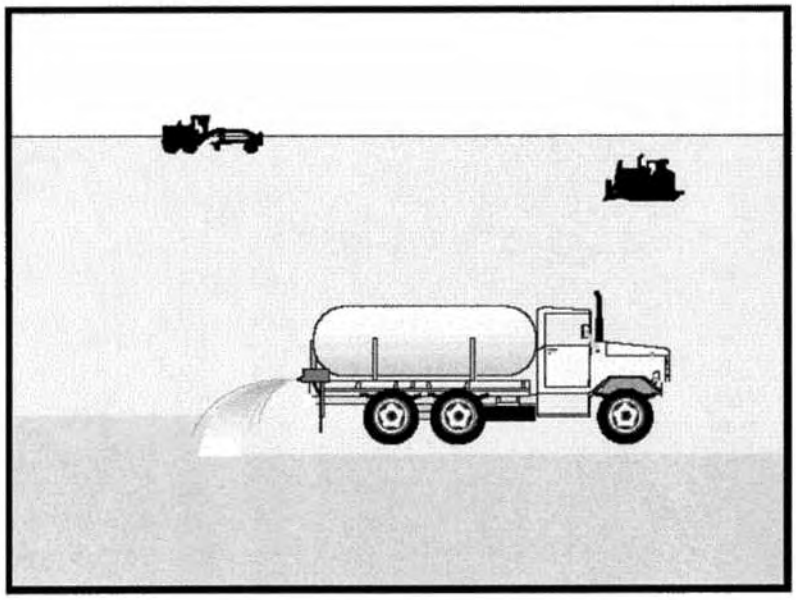

Objectives

EC	Erosion Control	
SE	Sediment Control	☒
TC	Tracking Control	
WE	Wind Erosion Control	☑
NS	Non-Stormwater Management Control	
WM	Waste Management and Materials Pollution Control	

Legend:

☑ Primary Objective

☒ Secondary Objective

Targeted Constituents

Sediment	☑
Nutrients	
Trash	
Metals	
Bacteria	
Oil and Grease	
Organics	

Potential Alternatives

None

Description and Purpose

Wind erosion or dust control consists of applying water or other dust palliatives as necessary to prevent or alleviate dust nuisance generated by construction activities. Covering small stockpiles or areas is an alternative to applying water or other dust palliatives.

Suitable Applications

Wind erosion control BMPs are suitable during the following construction activities:

- Construction vehicle traffic on unpaved roads
- Drilling and blasting activities
- Sediment tracking onto paved roads
- Soils and debris storage piles
- Batch drop from front-end loaders
- Areas with unstabilized soil
- Final grading/site stabilization

Limitations

- Watering prevents dust only for a short period and should be applied daily (or more often) to be effective.
- Over watering may cause erosion.

- Oil or oil-treated subgrade should not be used for dust control because the oil may migrate into drainageways and/or seep into the soil.
- Effectiveness depends on soil, temperature, humidity, and wind velocity.
- Chemically treated sub grades may make the soil water repellant, interfering with long-term infiltration and the vegetation/re-vegetation of the site. Some chemical dust suppressants may be subject to freezing and may contain solvents and should be handled properly.
- Asphalt, as a mulch tack or chemical mulch, requires a 24-hour curing time to avoid adherence to equipment, worker shoes, etc. Application should be limited because asphalt surfacing may eventually migrate into the drainage system.
- In compacted areas, watering and other liquid dust control measures may wash sediment or other constituents into the drainage system.

Implementation

General

California's Mediterranean climate, with short wet seasons and long hot dry seasons, allows the soils to thoroughly dry out. During these dry seasons, construction activities are at their peak, and disturbed and exposed areas are increasingly subject to wind erosion, sediment tracking and dust generated by construction equipment.

Dust control, as a BMP, is a practice that is already in place for many construction activities. Los Angeles, the North Coast, and Sacramento, among others, have enacted dust control ordinances for construction activities that cause dust to be transported beyond the construction project property line.

Recently, the State Air Resources Control Board has, under the authority of the Clean Air Act, started to address air quality in relation to inhalable particulate matter less than 10 microns (PM-10). Approximately 90 percent of these small particles are considered to be dust. Existing dust control regulations by local agencies, municipal departments, public works department, and public health departments are in place in some regions within California.

Many local agencies require dust control in order to comply with local nuisance laws, opacity laws (visibility impairment) and the requirements of the Clean Air Act. The following are measures that local agencies may have already implemented as requirements for dust control from contractors:

- Construction and Grading Permits: Require provisions for dust control plans.
- Opacity Emission Limits: Enforce compliance with California air pollution control laws.
- Increase Overall Enforcement Activities: Priority given to cases involving citizen complaints.
- Maintain Field Application Records: Require records of dust control measures from contractor;
- Stormwater Pollution Prevention Plan: (SWPPP): Integrate dust control measures into SWPPP.

Dust Control Practices

Dust control BMPs generally stabilize exposed surfaces and minimize activities that suspend or track dust particles. The following table shows dust control practices that can be applied to site conditions that cause dust. For heavily traveled and disturbed areas, wet suppression (watering), chemical dust suppression, gravel asphalt surfacing, temporary gravel construction entrances, equipment wash-out areas, and haul truck covers can be employed as dust control applications. Permanent or temporary vegetation and mulching can be employed for areas of occasional or no construction traffic. Preventive measures would include minimizing surface areas to be disturbed, limiting onsite vehicle traffic to 15 mph, and controlling the number and activity of vehicles on a site at any given time.

SITE CONDITION	DUST CONTROL PRACTICES								
	Permanent Vegetation	Mulching	Wet Suppression (Watering)	Chemical Dust Suppression	Gravel or Asphalt	Silt Fences	Temporary Gravel Construction Entrances/Equipment Wash Down	Haul Truck Covers	Minimize Extent of Disturbed Area
Disturbed Areas not Subject to Traffic	X	X	X	X	X				X
Disturbed Areas Subject to Traffic			X	X	X		X		X
Material Stock Pile Stabilization			X	X		X			X
Demolition			X				X	X	
Clearing/ Excavation			X	X		X			X
Truck Traffic on Unpaved Roads			X	X	X		X	X	
Mud/Dirt Carry Out					X		X		

Additional preventive measures include:

- Schedule construction activities to minimize exposed area (EC-1, Scheduling).
- Quickly stabilize exposed soils using vegetation, mulching, spray-on adhesives, calcium chloride, sprinkling, and stone/gravel layering.
- Identify and stabilize key access points prior to commencement of construction.
- Minimize the impact of dust by anticipating the direction of prevailing winds.
- Direct most construction traffic to stabilized roadways within the project site.
- Water should be applied by means of pressure-type distributors or pipelines equipped with a spray system or hoses and nozzles that will ensure even distribution.
- All distribution equipment should be equipped with a positive means of shutoff.
- Unless water is applied by means of pipelines, at least one mobile unit should be available at all times to apply water or dust palliative to the project.

- If reclaimed waste water is used, the sources and discharge must meet California Department of Health Services water reclamation criteria and the Regional Water Quality Control Board requirements. Non-potable water should not be conveyed in tanks or drain pipes that will be used to convey potable water and there should be no connection between potable and non-potable supplies. Non-potable tanks, pipes, and other conveyances should be marked, "NON-POTABLE WATER - DO NOT DRINK."
- Materials applied as temporary soil stabilizers and soil binders also generally provide wind erosion control benefits.
- Pave or chemically stabilize access points where unpaved traffic surfaces adjoin paved roads.
- Provide covers for haul trucks transporting materials that contribute to dust.
- Provide for wet suppression or chemical stabilization of exposed soils.
- Provide for rapid clean up of sediments deposited on paved roads. Furnish stabilized construction road entrances and vehicle wash down areas.
- Stabilize inactive construction sites using vegetation or chemical stabilization methods.
- Limit the amount of areas disturbed by clearing and earth moving operations by scheduling these activities in phases.

For chemical stabilization, there are many products available for chemically stabilizing gravel roadways and stockpiles. If chemical stabilization is used, the chemicals should not create any adverse effects on stormwater, plant life, or groundwater.

Costs

Installation costs for water and chemical dust suppression are low, but annual costs may be quite high since these measures are effective for only a few hours to a few days.

Inspection and Maintenance

- Inspect and verify that activity-based BMPs are in place prior to the commencement of associated activities. While activities associated with the BMP are under way, inspect weekly during the rainy season and at two-week intervals in the non-rainy season to verify continued BMP implementation.
- Check areas protected to ensure coverage.
- Most dust control measures require frequent, often daily, or multiple times per day attention.

References

Best Management Practices and Erosion Control Manual for Construction Sites, Flood Control District of Maricopa County, Arizona, September 1992.

California Air Pollution Control Laws, California Air Resources Board, 1992.

Caltrans, Standard Specifications, Sections 10, "Dust Control"; Section 17, "Watering"; and Section 18, "Dust Palliative".

Prospects for Attaining the State Ambient Air Quality Standards for Suspended Particulate Matter (PM10), Visibility Reducing Particles, Sulfates, Lead, and Hydrogen Sulfide, California Air Resources Board, April 1991.

Stormwater Quality Handbooks Construction Site Best Management Practices (BMPs) Manual, State of California Department of Transportation (Caltrans), November 2000.

Section 4
Non-Stormwater Management and Material Management BMPs

4.1 Non-Stormwater Management BMPs

The Construction General Permit prohibits the discharge of materials other than stormwater and authorized non-stormwater discharges. It is recognized that certain non-stormwater discharges may be necessary for the completion of construction projects. Such discharges include but are not limited to irrigation of vegetative erosion control measures, pipe flushing and testing, and street cleaning.

Non-stormwater management BMPs are source control BMPs that prevent pollution by limiting or reducing potential pollutants at their source or eliminating off-site discharge. These practices involve day-to-day operations of the construction site and are usually under the control of the contractor. These BMPs are also referred to as "good housekeeping practices" which involve keeping a clean, orderly construction site.

Non-stormwater management BMPs also include procedures and practices designed to minimize or eliminate the discharge of pollutants from vehicle and equipment cleaning, fueling, and maintenance operations to stormwater drainage systems or to watercourses.

Table 4-1 lists the non-stormwater management BMPs. All these BMPs must be implemented depending on the conditions and applicability of deployment described as part of the BMP.

Table 4-1 Non-Stormwater Management BMPs

BMP#	BMP Name
NS-1	Water Conservation Practices
NS-2	Dewatering Operations
NS-3	Paving and Grinding Operations
NS-4	Temporary Stream Crossing
NS-5	Clear Water Diversion
NS-6	Illicit Connection/Discharge
NS-7	Potable Water/Irrigation
NS-8	Vehicle and Equipment Cleaning
NS-9	Vehicle and Equipment Fueling
NS-10	Vehicle and Equipment Maintenance
NS-11	Pile Driving Operations
NS-12	Concrete Curing
NS-13	Concrete Finishing
NS-14	Material and Equipment Use
NS-15	Demolition Adjacent to Water
NS-16	Temporary Batch Plants

It is recommended that owners and contractors be vigilant regarding implementation of these BMPs, including making their implementation a condition of continued employment, and part of all prime and subcontract agreements. By doing so, the chance of inadvertent violation by an uncaring individual can be prevented, potentially saving thousands of dollars in fines and project delays. Also, if procedures are not properly implemented and/or if BMPs are compromised then the discharge is subject to sampling and analysis requirements contained in the General Permit.

4.2 Waste Management & Materials Pollution Control BMPs

Waste management and materials pollution control BMPs, like non-stormwater management BMPs, are source control BMPs that prevent pollution by limiting or reducing potential pollutants at their source before they come in contact with stormwater. These BMPs also involve day-to-day operations of the construction site, are under the control of the contractor, and are additional "good housekeeping practices" which involve keeping a clean, orderly construction site.

Table 4-2 Waste Management & Materials Pollution Control BMPs

BMP#	BMP Name
WM-1	Material Delivery and Storage
WM-2	Material Use
WM-3	Stockpile Management
WM-4	Spill Prevention and Control
WM-5	Solid Waste Management
WM-6	Hazardous Waste Management
WM-7	Contaminated Soil Management
WM-8	Concrete Waste Management
WM-9	Sanitary/ Septic Waste Management
WM-10	Liquid Waste Management

Waste management consists of implementing procedural and structural BMPs for handling, storing, and disposing of wastes generated by a construction project. The objective is to prevent the release of waste materials into stormwater runoff or discharges through proper management of the following types of wastes:

- Solid
- Sanitary
- Concrete
- Hazardous
- Equipment – related wastes

Materials pollution control (also called materials handling) consists of implementing procedural and structural BMPs in the handling, storing, and the use of construction materials. The BMPs are intended to prevent the release of pollutants during stormwater and non-stormwater discharges. The objective is to prevent or reduce the opportunity for contamination of stormwater runoff from construction materials by covering and/or providing secondary containment of storage areas, and by taking adequate precautions when handling materials. These controls must be implemented for all applicable activities, material usage, and site conditions.

Table 4-2 lists the waste management and materials pollution control BMPs. It is important to note that these BMPs should be implemented depending on the conditions/applicability of deployment described as part of the BMP.

4.3 Fact Sheet Format

A BMP fact sheet is a short document that gives all the information about a particular BMP. Typically, each fact sheet contains the information outlined in Figure 4-1. Completed fact sheets for each of the above activities are provided in Section 4.4.

The fact sheets also contain side bar presentations with information on BMP objectives, targeted constituents, removal effectiveness, and potential alternatives.

NS-xx Example Fact Sheet

Description and Purpose
Suitable Applications
Limitations
Implementation
Costs
Inspection and Maintenance
References

Figure 4-1
Example Fact Sheet

4.4 BMP Fact Sheets

BMP Fact Sheets for non-stormwater management and waste management and materials pollution control follow. The BMP fact sheets are individually page numbered and are suitable for photocopying and inclusions in SWPPPs. Fresh copies of the fact sheets can be individually downloaded from the Caltrans Stormwater BMP Handbook website at http://www.cabmphandbooks.com.

Water Conservation Practices NS-1

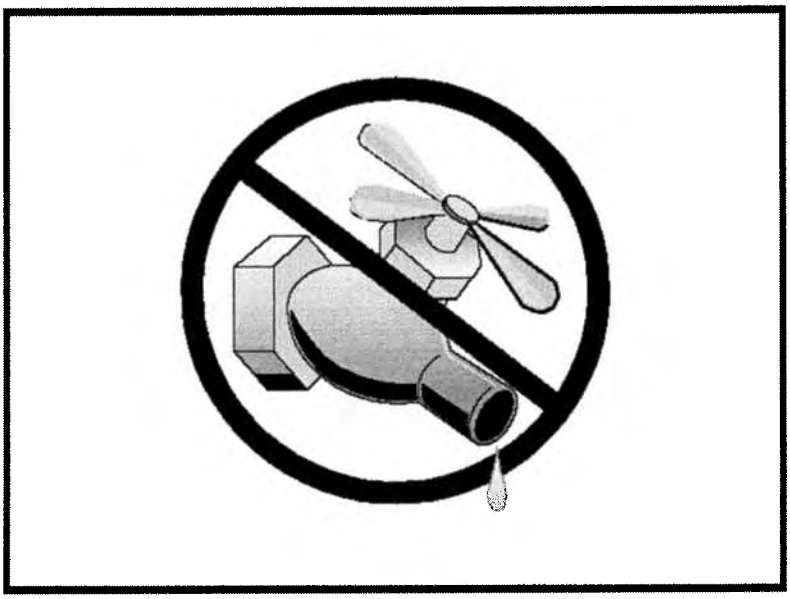

Objectives		
EC	Erosion Control	☒
SE	Sediment Control	☒
TR	Tracking Control	
WE	Wind Erosion Control	
NS	Non-Stormwater Management Control	☑
WM	Waste Management and Materials Pollution Control	

Legend:
☑ Primary Objective
☒ Secondary Objective

Targeted Constituents	
Sediment	☑
Nutrients	
Trash	
Metals	
Bacteria	
Oil and Grease	
Organics	

Potential Alternatives

None

Description and Purpose

Water conservation practices are activities that use water during the construction of a project in a manner that avoids causing erosion and the transport of pollutants offsite. These practices can reduce or eliminate non-stormwater discharges.

Suitable Applications

Water conservation practices are suitable for all construction sites where water is used, including piped water, metered water, trucked water, and water from a reservoir.

Limitations

- None identified.

Implementation

- Keep water equipment in good working condition.
- Stabilize water truck filling area.
- Repair water leaks promptly.
- Washing of vehicles and equipment on the construction site is discouraged.
- Avoid using water to clean construction areas. If water must be used for cleaning or surface preparation, surface should be swept and vacuumed first to remove dirt. This will minimize amount of water required.

- Direct construction water runoff to areas where it can soak into the ground or be collected and reused.
- Authorized non-stormwater discharges to the storm drain system, channels, or receiving waters are acceptable with the implementation of appropriate BMPs.
- Lock water tank valves to prevent unauthorized use.

Costs

The cost is small to none compared to the benefits of conserving water.

Inspection and Maintenance

- Inspect and verify that activity based BMPs are in place prior to the commencement of authorized non-stormwater discharges.
- Inspect BMPs subject to non-stormwater discharges daily while non-stormwater discharges are occuring.
- Repair water equipment as needed to prevent unintended discharges.
  - Water trucks
  - Water reservoirs (water buffalos)
  - Irrigation systems
  - Hydrant connections

References

Stormwater Quality Handbooks - Construction Site Best Management Practices (BMPs) Manual, State of California Department of Transportation (Caltrans), November 2000.

Dewatering Operations NS-2

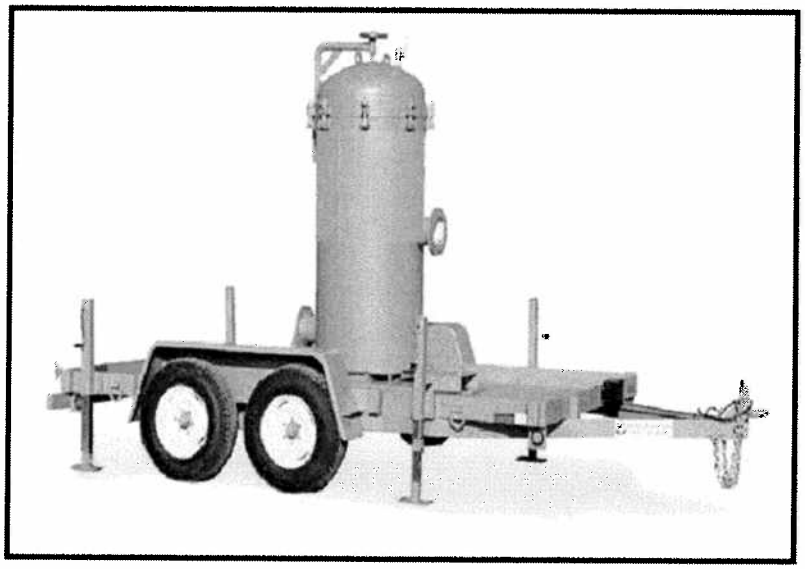

Objectives

EC	Erosion Control	
SE	Sediment Control	☒
TR	Tracking Control	
WE	Wind Erosion Control	
NS	Non-Stormwater Management Control	☑
WM	Waste Management and Materials Pollution Control	

Legend:
☑ Primary Objective
☒ Secondary Objective

Targeted Constituents

Sediment	☑
Nutrients	
Trash	
Metals	
Bacteria	
Oil and Grease	☑
Organics	

Potential Alternatives

SE-5: Fiber Roll

SE-6: Gravel Bag Berm

SE-9: Straw Bale Barrier

Description and Purpose

Dewatering operations are practices that manage the discharge of pollutants when non-stormwater and accumulated precipitation must be removed from a work location so that construction work may be accomplished.

Suitable Applications

These practices are implemented for discharges of non-stormwater from construction sites. Non-stormwaters include, but are not limited to, groundwater, water from cofferdams, water diversions, and waters used during construction activities that must be removed from a work area.

Practices identified in this section are also appropriate for implementation when managing the removal of accumulated precipitation (stormwater) from depressed areas at a construction site.

Limitations

- Site conditions will dictate design and use of dewatering operations.
- The controls discussed in this best management practice (BMP) address sediment only.
- The controls detailed in this BMP only allow for minimal settling time for sediment particles. Use only when site conditions restrict the use of the other control methods.
- Dewatering operations will require, and must comply with, applicable local permits.

- Avoid dewatering discharges where possible by using the water for dust control, by infiltration, etc.

Implementation

- Dewatering non-stormwater cannot be discharged without prior notice to and approval from the Regional Water Quality Control Board (RWQCB) and local stormwater management agency. This includes stormwater that is co-mingled with groundwater or other non-stormwater sources. Once the discharge is allowed, appropriate BMPs must be implemented to ensure the discharge complies with all permit requirements and regional and watershed-specific requirements.
- RWQCB may require a separate NPDES permit prior to the dewatering discharge of non-stormwater. These permits will have specific testing, monitoring, and discharge requirements and can take significant time to obtain.
- The flow chart shown in Figure 1 should be utilized to guide dewatering operations.
- The owner will coordinate monitoring and permit compliance.
- Additional permits or permissions from other agencies may be required for dewatering cofferdams or diversions.
- Dewatering discharges must not cause erosion at the discharge point.

A variety of methods can be used to treat water during dewatering operations. Several devices are presented below and provide options to achieve sediment removal. The size of particles present in the sediment and Permit or receiving water limitations on sediment are key considerations for selecting sediment treatment option(s); in some cases, the use of multiple devices may be appropriate.

Sediment Basin (see also SE-2)

Description:

- A sediment basin is a temporary basin with a controlled release structure that is formed by excavation or construction of an embankment to detain sediment-laden runoff and allow sediment to settle out before discharging. Sediment basins are generally larger than Sediment Traps (SE-3).

Appropriate Applications:

- Effective for the removal of gravel, sand, silt, some metals that settle out with the sediment, and trash.

Implementation:

- Excavation and construction of related facilities is required.
- Temporary sediment basins must be fenced if safety is a concern.
- Outlet protection is required to prevent erosion at the outfall location.

Maintenance:

- Maintenance is required for safety fencing, vegetation, embankment, inlet and outfall structures, as well as other features.
- Removal of sediment is required when the storage volume is reduced by one-half.

Sediment Trap (See also SE-3)

Description:

- A sediment trap is a temporary basin formed by excavation and/or construction of an earthen embankment across a waterway or low drainage area to detain sediment-laden runoff and allow sediment to settle out before discharging. Sediment traps are generally smaller than Sediment Basins (SE-2).

Appropriate Applications:

Effective for the removal of large and medium sized particles (sand and gravel) and some metals that settle out with the sediment.

Implementation:

- Excavation and construction of related facilities is required.
- Trap inlets should be located to maximize the travel distance to the trap outlet.
- Use rock or vegetation to protect the trap outlets against erosion.

Maintenance:

- Maintenance is required for vegetation, embankment, inlet and outfall structures, as well as other features.
- Removal of sediment is required when the storage volume is reduced by one-third.

Weir Tanks

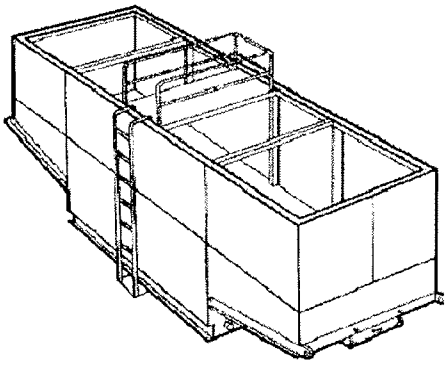

Description:

- A weir tank separates water and waste by using weirs. The configuration of the weirs (over and under weirs) maximizes the residence time in the tank and determines the waste to be removed from the water, such as oil, grease, and sediments.

Appropriate Applications:

- The tank removes trash, some settleable solids (gravel, sand, and silt), some visible oil and grease, and some metals (removed with sediment). To achieve high levels of flow, multiple tanks can be used in parallel. If additional treatment is desired, the tanks can be placed in series or as pre-treatment for other methods.

Implementation:

- Tanks are delivered to the site by the vendor, who can provide assistance with set-up and operation.
- Tank size will depend on flow volume, constituents of concern, and residency period required. Vendors should be consulted to appropriately size tank.

Maintenance:

- Periodic cleaning is required based on visual inspection or reduced flow.
- Oil and grease disposal must be by licensed waste disposal company.

Dewatering Tanks

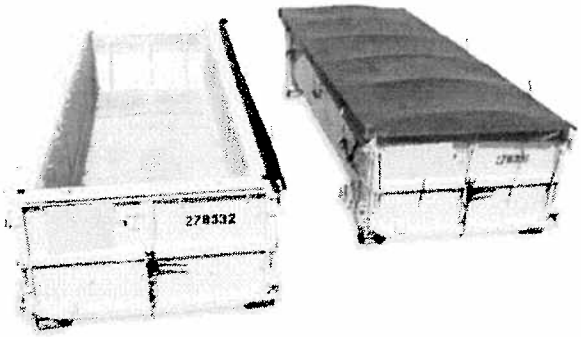

Description:

- A dewatering tank removes debris and sediment. Flow enters the tank through the top, passes through a fabric filter, and is discharged through the bottom of the tank. The filter separates the solids from the liquids.

Appropriate Applications:

- The tank removes trash, gravel, sand, and silt, some visible oil and grease, and some metals (removed with sediment). To achieve high levels of flow, multiple tanks can be used in parallel. If additional treatment is desired, the tanks can be placed in series or as pre-treatment for other methods.

Implementation:

- Tanks are delivered to the site by the vendor, who can provide assistance with set-up and operation.
- Tank size will depend on flow volume, constituents of concern, and residency period required. Vendors should be consulted to appropriately size tank.

Maintenance:

- Periodic cleaning is required based on visual inspection or reduced flow.
- Oil and grease disposal must be by licensed waste disposal company.

Gravity Bag Filter

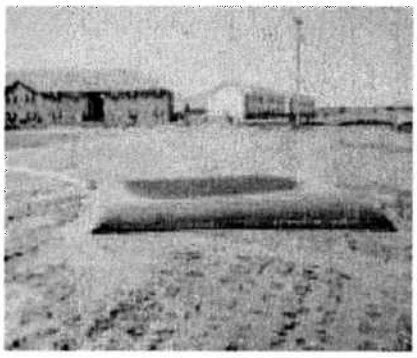

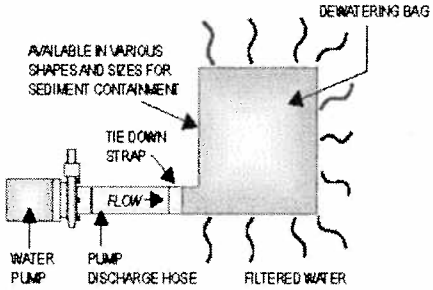

Description:

- A gravity bag filter, also referred to as a dewatering bag, is a square or rectangular bag made of non-woven geotextile fabric that collects sand, silt, and fines.

Appropriate Applications:

- Effective for the removal of sediments (gravel, sand, and silt). Some metals are removed with the sediment.

Implementation:

- Water is pumped into one side of the bag and seeps through the bottom and sides of the bag.
- A secondary barrier, such as a rock filter bed or straw/hay bale barrier, is placed beneath and beyond the edges of the bag to capture sediments that escape the bag.

Maintenance:

- Inspection of the flow conditions, bag condition, bag capacity, and the secondary barrier is required.
- Replace the bag when it no longer filters sediment or passes water at a reasonable rate.
- The bag is disposed of offsite.

Sand Media Particulate Filter

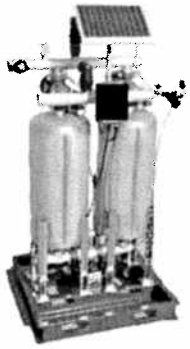

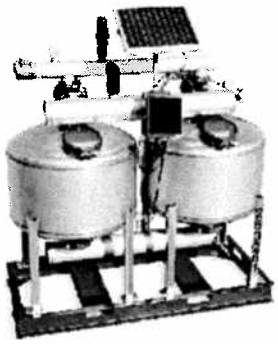

Description:

- Water is treated by passing it through canisters filled with sand media. Generally, sand filters provide a final level of treatment. They are often used as a secondary or higher level of treatment after a significant amount of sediment and other pollutants have been removed using other methods.

Appropriate Applications:

- Effective for the removal of trash, gravel, sand, and silt and some metals, as well as the reduction of biochemical oxygen demand (BOD) and turbidity.
- Sand filters can be used for stand-alone treatment or in conjunction with bag and cartridge filtration if further treatment is required.
- Sand filters can also be used to provide additional treatment to water treated via settling or basic filtration.

Implementation:

- The filters require delivery to the site and initial set up. The vendor can provide assistance with installation and operation.

Maintenance:

- The filters require regular service to monitor and maintain the level of the sand media. If subjected to high loading rates, filters can plug quickly.
- Venders generally provide data on maximum head loss through the filter. The filter should be monitored daily while in use, and cleaned when head loss reaches target levels.
- If cleaned by backwashing, the backwash water may need to be hauled away for disposal, or returned to the upper end of the treatment train for another pass through the series of dewatering BMPs.

Pressurized Bag Filter

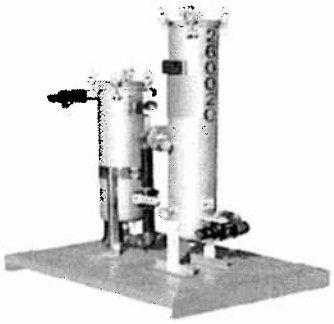

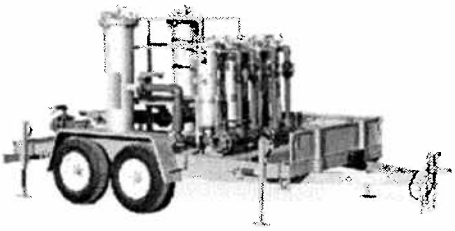

Description:

- A pressurized bag filter is a unit composed of single filter bags made from polyester felt material. The water filters through the unit and is discharged through a header. Vendors provide bag filters in a variety of configurations. Some units include a combination of bag filters and cartridge filters for enhanced contaminant removal.

Appropriate Applications:

- Effective for the removal of sediment (sand and silt) and some metals, as well as the reduction of BOD, turbidity, and hydrocarbons. Oil absorbent bags are available for hydrocarbon removal.
- Filters can be used to provide secondary treatment to water treated via settling or basic filtration.

Implementation:

- The filters require delivery to the site and initial set up. The vendor can provide assistance with installation and operation.

Maintenance:

- The filter bags require replacement when the pressure differential equals or exceeds the manufacturer's recommendation.

Cartridge Filter

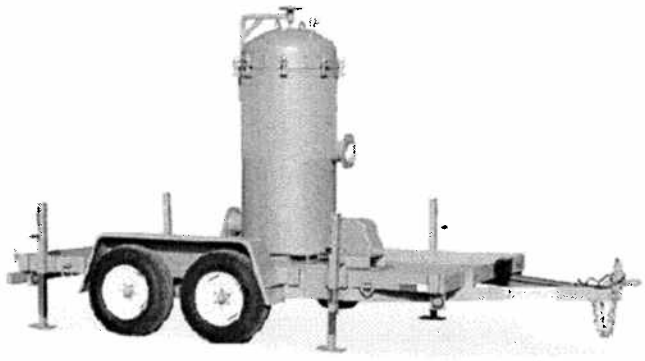

Description:

- Cartridge filters provide a high degree of pollutant removal by utilizing a number of individual cartridges as part of a larger filtering unit. They are often used as a secondary or higher (polishing) level of treatment after a significant amount of sediment and other pollutants are removed. Units come with various cartridge configurations (for use in series with bag filters) or with a larger single cartridge filtration unit (with multiple filters within).

Appropriate Applications:

- Effective for the removal of sediment (sand, silt, and some clays) and metals, as well as the reduction of BOD, turbidity, and hydrocarbons. Hydrocarbons can effectively be removed with special resin cartridges.

- Filters can be used to provide secondary treatment to water treated via settling or basic filtration.

Implementation:

- The filters require delivery to the site and initial set up. The vendor can provide assistance.

Maintenance:

- The cartridges require replacement when the pressure differential equals or exceeds the manufacturer's recommendation.

Costs

- Sediment controls are low to high cost measures depending on the dewatering system that is selected. Pressurized filters tend to be more expensive than gravity settling, but are often more effective. Simple tanks are generally rented on a long-term basis (one or more months) and can range from $360 per month for a 1,000 gallon tank to $2,660 per month for a 10,000 gallon tank. Mobilization and demobilization costs vary considerably.

Inspection and Maintenance

- Inspect and verify that activity-based BMPs are in place prior to the commencement of associated activities. While activities associated with the BMP are under way, inspect weekly during the rainy season and at two-week intervals in the non-rainy season to verify continued BMP implementation.

- Inspect BMPs subject to non-stormwater discharges daily while non-stormwater discharges occur.
- Unit-specific maintenance requirements are included with the description of each unit.
- Sediment removed during the maintenance of a dewatering device may be either spread onsite and stabilized, or disposed of at a disposal site as approved by the owner.
- Sediment that is commingled with other pollutants must be disposed of in accordance with all applicable laws and regulations and as approved by the owner.

References

Blueprint for a Clean Bay: Best Management Practices to Prevent Stormwater Pollution from Construction Related Activities; Santa Clara Valley Nonpoint Source Pollution Control Program, 1995.

Stormwater Quality Handbooks - Construction Site Best Management Practices (BMPs) Manual, State of California Department of Transportation (Caltrans), November 2000.

Stormwater Management for Construction Activities, Developing Pollution Prevention Plans and Best Management Practices, EPA 832-R-92005; USEPA, April 1992.

Labor Surcharge & Equipment Rental Rates, April 1, 2002 through March 31, 2003, California Department of Transportation (Caltrans).

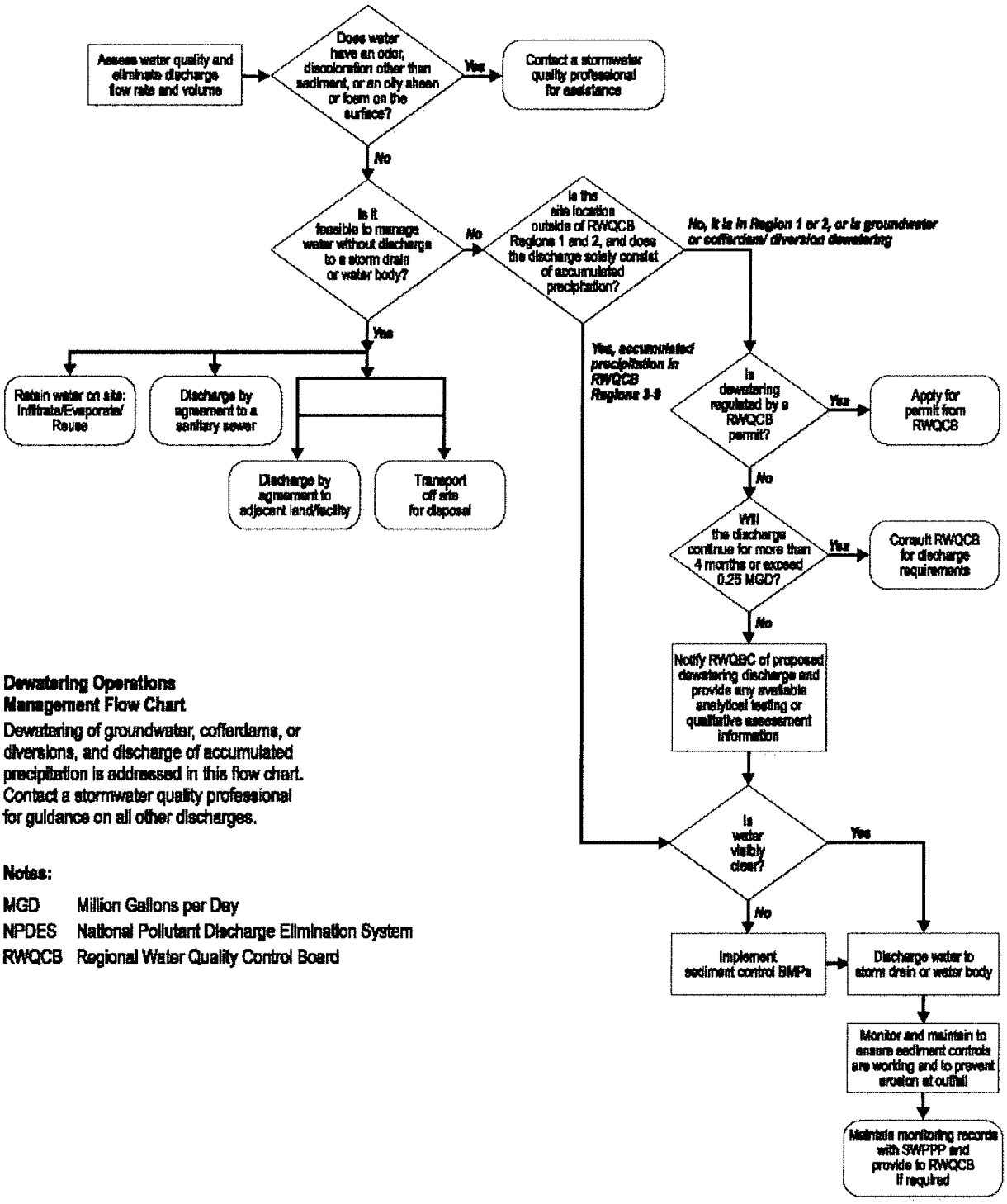

Dewatering Operations Management Flow Chart

Dewatering of groundwater, cofferdams, or diversions, and discharge of accumulated precipitation is addressed in this flow chart. Contact a stormwater quality professional for guidance on all other discharges.

Notes:

MGD Million Gallons per Day
NPDES National Pollutant Discharge Elimination System
RWQCB Regional Water Quality Control Board

Figure 1
Operations Flow Chart

Paving and Grinding Operations NS-3

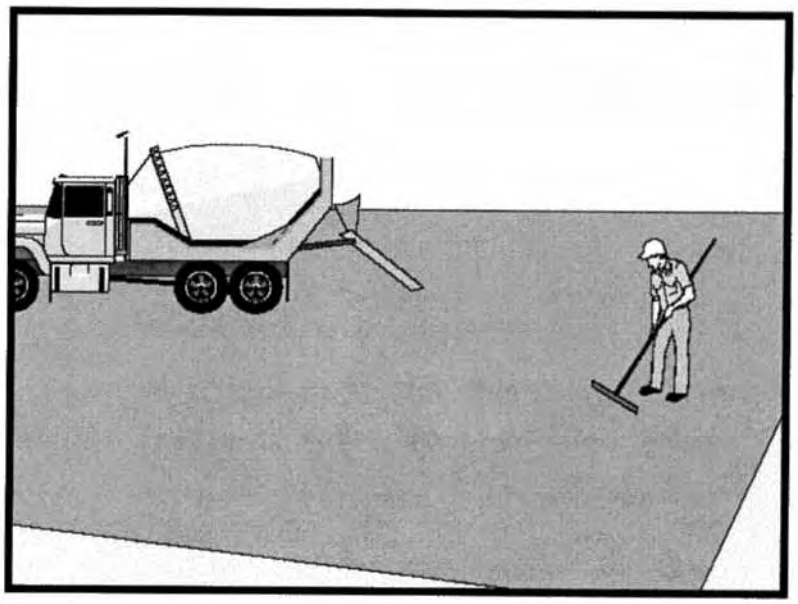

Objectives

EC	Erosion Control	
SE	Sediment Control	
TR	Tracking Control	
WE	Wind Erosion Control	
NS	Non-Stormwater Management Control	☑
WM	Waste Management and Materials Pollution Control	☒

Legend:
☑ Primary Objective
☒ Secondary Objective

Targeted Constituents

Sediment	☑
Nutrients	
Trash	
Metals	
Bacteria	
Oil and Grease	☑
Organics	

Potential Alternatives

None

Description and Purpose

Prevent or reduce the discharge of pollutants from paving operations, using measures to prevent runon and runoff pollution, properly disposing of wastes, and training employees and subcontractors.

Suitable Applications

These procedures are implemented where paving, surfacing, resurfacing, or sawcutting, may pollute stormwater runoff or discharge to the storm drain system or watercourses.

Limitations

- Finer solids are not effectively removed by filtration systems.
- Paving opportunities may be limited during wet weather.

Implementation

General

- Avoid paving during the wet season when feasible.
- Reschedule paving and grinding activities if rain is in the forecast.
- Train employees and sub-contractors in pollution prevention and reduction.
- Store materials away from drainage courses to prevent stormwater runon (see WM-1, Material Delivery and Storage).

- Protect drainage courses, particularly in areas with a grade, by employing BMPs to divert runoff or to trap and filter sediment.
- If paving involves an onsite mixing plant, follow the stormwater permitting requirements for industrial activities.
- Stockpile material removed from roadways away from drain inlets, drainage ditches, and watercourses, These materials should be stored consistent with WM-3, Stockpile Management.
- Disposal of PCC and AC waste should be in conformance with WM-8, Concrete Waste Management.

Saw Cutting, Grinding, and Pavement Removal

- Shovel or vacuum saw-cut slurry and remove from site. Cover or barricade storm drains during saw cutting to contain slurry.
- When paving involves AC, the following steps should be implemented to prevent the discharge of grinding residue, uncompacted or loose AC, tack coats, equipment cleaners, or unrelated paving materials:
  - AC grindings, pieces, or chunks used in embankments or shoulder backing must not be allowed to enter any storm drains or watercourses. Install silt fence until structure is stabilized or permanent controls are in place. Examples of temporary perimeter controls can be found in EC-9, Earth Dikes and Drainage Swales; SE-1, Silt Fence; or SE-5, Fiber Rolls.
  - Collect and remove all broken asphalt and recycle when practical. Old or spilled asphalt must be recycled or disposed.
  - Any AC chunks and pieces used in embankments must be placed above the water table and covered by at least 1 ft of material.
- Do not allow saw-cut slurry to enter storm drains or watercourses. Residue from grinding operations should be picked up by means of a vacuum attachment to the grinding machine, should not be allowed to flow across the pavement, and should not be left on the surface of the pavement. See also WM-8, Concrete Waste Management, and WM-10, Liquid Waste Management.
- Dig out activities should not be conducted in the rain.
- Collect dig out material by mechanical or manual methods. This material may be recycled for use as shoulder backing or base material.
- If dig out material cannot be recycled, transport the material back to an approved storage site.

Asphaltic Concrete Paving

- If paving involves asphaltic cement concrete, follow these steps:

- Do not allow sand or gravel placed over new asphalt to wash into storm drains, streets, or creeks. Vacuum or sweep loose sand and gravel and properly dispose of this waste by referring to WM-5, Solid Waste Management.

- Old asphalt must be disposed of properly. Collect and remove all broken asphalt from the site and recycle whenever possible.

Portland Cement Concrete Paving

- Do not wash sweepings from exposed aggregate concrete into a storm drain system. Collect and return to aggregate base stockpile or dispose of properly.

- Allow aggregate rinse to settle. Then, either allow rinse water to dry in a temporary pit as described in WM-8, Concrete Waste Management, or pump the water to the sanitary sewer if allowed by the local wastewater authority.

Sealing Operations

- During chip seal application and sweeping operations, petroleum or petroleum covered aggregate must not be allowed to enter any storm drain or water courses. Apply temporary perimeter controls until structure is stabilized.

- Drainage inlet structures and manholes should be covered with filter fabric during application of seal coat, tack coat, slurry seal, and fog seal.

- Seal coat, tack coat, slurry seal, or fog seal should not be applied if rainfall is predicted to occur during the application or curing period.

Paving Equipment

- Leaks and spills from paving equipment can contain toxic levels of heavy metals and oil and grease. Place drip pans or absorbent materials under paving equipment when not in use. Clean up spills with absorbent materials rather than burying. See NS-10, Vehicle and Equipment Maintenance, WM-4, Spill Prevention and Control, and WM-10, Liquid Waste Management.

- Substances used to coat asphalt transport trucks, and asphalt spreading equipment should not contain soap and should be non-foaming and non-toxic.

- Use only non-toxic substances to coat asphalt transport trucks and asphalt spreading equipment.

- Paving equipment parked onsite should be parked over plastic to prevent soil contamination.

- Clean asphalt coated equipment offsite whenever possible. When cleaning dry, hardened asphalt from equipment, manage hardened asphalt debris as described in WM-5, Solid Waste Management. Any cleaning onsite should follow NS-8, Vehicle and Equipment Cleaning.

Thermoplastic Striping

- Thermoplastic striper and pre-heater equipment shutoff valves should be inspected to ensure that they are working properly to prevent leaking thermoplastic from entering drain inlets, the stormwater drainage system, or watercourses.
- Pre-heaters should be filled carefully to prevent splashing or spilling of hot thermoplastic. Leave six inches of space at the top of the pre-heater container when filling thermoplastic to allow room for material to move when the vehicle is deadheaded.
- Do not pre-heat, transfer, or load thermoplastic near drain inlets or watercourses.
- Clean truck beds daily of loose debris and melted thermoplastic. When possible, recycle thermoplastic material.

Raised/Recessed Pavement Marker Application and Removal

- Do not transfer or load bituminous material near drain inlets, the stormwater drainage system, or watercourses.
- Melting tanks should be loaded with care and not filled to beyond six inches from the top to leave room for splashing when vehicle is deadheaded.
- When servicing or filling melting tanks, ensure all pressure is released before removing lids to avoid spills.
- On large-scale projects, use mechanical or manual methods to collect excess bituminous material from the roadway after removal of markers.

Costs

- All of the above are low cost measures.

Inspection and Maintenance

- Inspect and verify that activity-based BMPs are in place prior to the commencement of associated activities. While activities associated with the BMP are under way, inspect weekly during the rainy season and at two-week intervals in the non-rainy season to verify continued BMP implementation.
- Keep ample supplies of drip pans or absorbent materials onsite.
- Inspect and maintain machinery regularly to minimize leaks and drips.

References

Blueprint for a Clean Bay: Best Management Practices to Prevent Stormwater Pollution from Construction Related Activities; Santa Clara Valley Nonpoint Source Pollution Control Program, 1995.

Hot Mix Asphalt-Paving Handbook AC 150/5370-14, Appendix I, U.S. Army Corps of Engineers, July 1991.

Stormwater Quality Handbooks - Construction Site Best Management Practices (BMPs) Manual, State of California Department of Transportation (Caltrans), November 2000.

Temporary Stream Crossing NS-4

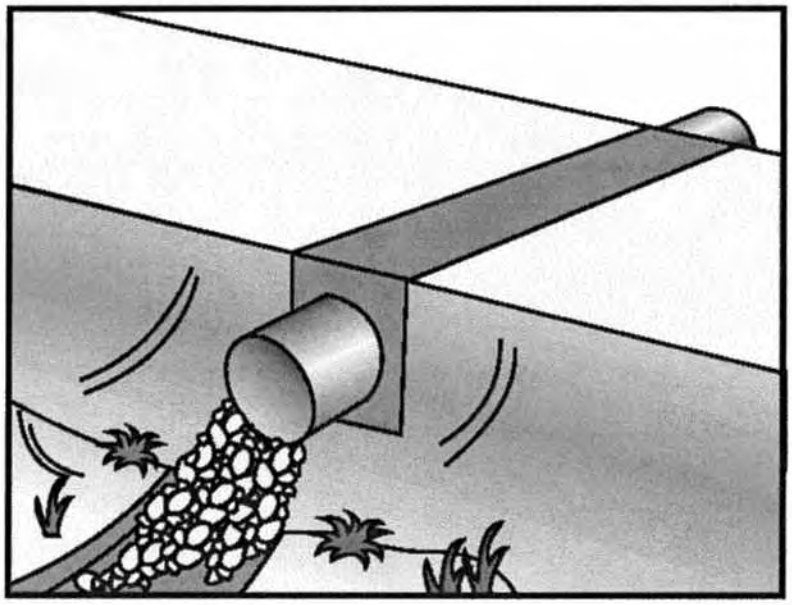

Objectives

EC	Erosion Control	☒
SE	Sediment Control	☒
TR	Tracking Control	☒
WE	Wind Erosion Control	
NS	Non-Stormwater Management Control	☑
WM	Waste Management and Materials Pollution Control	

Legend:

☑ Primary Objective

☒ Secondary Objective

Targeted Constituents

Sediment	☑
Nutrients	
Trash	
Metals	
Bacteria	
Oil and Grease	
Organics	

Potential Alternatives

None

Description and Purpose

A temporary stream crossing is a temporary culvert, ford or bridge placed across a waterway to provide access for construction purposes for a period of less than one year. Temporary access crossings are not intended to maintain traffic for the public. The temporary access will eliminate erosion and downstream sedimentation caused by vehicles.

Suitable Applications

Temporary stream crossings should be installed at all designated crossings of perennial and intermittent streams on the construction site, as well as for dry channels that may be significantly eroded by construction traffic.

Temporary streams crossings are installed at sites:

- Where appropriate permits have been secured (404 Permits, and 401 Certifications)
- Where construction equipment or vehicles need to frequently cross a waterway
- When alternate access routes impose significant constraints
- When crossing perennial streams or waterways causes significant erosion
- Where construction activities will not last longer than one year

- Where appropriate permits have been obtained for the stream crossing

Limitations

The following limitations may apply:

- Installation and removal will usually disturb the waterway.
- Installation may require Regional Water Quality Control Board (RWQCB) 401 Certification, U.S. Army Corps of Engineers 404 permit and approval by California Department of Fish and Game. If numerical-based water quality standards are mentioned in any of these and other related permits, testing and sampling may be required.
- Installation may require dewatering or temporary diversion of the stream. See NS-2, Dewatering Operations and NS-5, Clear Water Diversion.
- Installation may cause a constriction in the waterway, which can obstruct flood flow and cause flow backups or washouts. If improperly designed, flow backups can increase the pollutant load through washouts and scouring.
- Use of natural or other gravel in the stream for construction of Cellular Confinement System (CCS) ford crossing will be contingent upon approval by fisheries agencies.
- Ford crossings may degrade water quality due to contact with vehicles and equipment.
- May be expensive for a temporary improvement.
- Requires other BMPs to minimize soil disturbance during installation and removal.
- Fords should only be used in dry weather.

Implementation

General

The purpose of this BMP is to provide a safe, erosion-free access across a stream for construction equipment. Minimum standards and specifications for the design, construction, maintenance, and removal of the structure should be established by an engineer registered in California. Temporary stream crossings may be necessary to prevent construction equipment from causing erosion of the stream and tracking sediment and other pollutants into the stream.

Temporary stream crossings are used as access points to construction sites when other detour routes may be too long or burdensome for the construction equipment. Often heavy construction equipment must cross streams or creeks, and detour routes may impose too many constraints such as being too narrow or poor soil strength for the equipment loadings. Additionally, the contractor may find a temporary stream crossing more economical for light–duty vehicles to use for frequent crossings, and may have less environmental impact than construction of a temporary access road.

Location of the temporary stream crossing should address:

- Site selection where erosion potential is low.

- Areas where the side slopes from site runoff will not spill into the side slopes of the crossing.

The following types of temporary stream crossings should be considered:

- **Culverts** – A temporary culvert is effective in controlling erosion but will cause erosion during installation and removal. A temporary culvert can be easily constructed and allows for heavy equipment loads.

- **Fords** - Appropriate during the dry season in arid areas. Used on dry washes and ephemeral streams, and low-flow perennial streams. CCS, a type of ford crossing, is also appropriate for use in streams that would benefit from an influx of gravels. A temporary ford provides little sediment and erosion control and is ineffective in controlling erosion in the stream channel. A temporary ford is the least expensive stream crossing and allows for maximum load limits. It also offers very low maintenance. Fords are more appropriate during the dry ice season and in arid areas of California.

- **Bridges** - Appropriate for streams with high flow velocities, steep gradients and where temporary restrictions in the channel are not allowed.

Design

During the long summer construction season in much of California, rainfall is infrequent and many streams are dry. Under these conditions, a temporary ford may be sufficient. A ford is not appropriate if construction will continue through the winter rainy season, if summer thunderstorms are likely, or if the stream flows during most of the year. Temporary culverts and bridges should then be considered and, if used, should be sized to pass a significant design storm (i.e., at least a 10-year storm). The temporary stream crossing should be protected against erosion, both to prevent excessive sedimentation in the stream and to prevent washout of the crossing.

Design and installation requires knowledge of stream flows and soil strength. Designs should be prepared under direction of, and approved by, a registered civil engineer and for bridges, a registered structural engineer. Both hydraulic and construction loading requirements should be considered with the following:

- Comply with any special requirements for culvert and bridge crossings, particularly if the temporary stream crossing will remain through the rainy season.

- Provide stability in the crossing and adjacent areas to withstand the design flow. The design flow and safety factor should be selected based on careful evaluation of the risks due to over topping, flow backups, or washout.

- Install sediment traps immediately downstream of crossings to capture sediments. See SE-3, Sediment Trap.

- Avoid oil or other potentially hazardous materials for surface treatment.

- Culverts are relatively easy to construct and able to support heavy equipment loads.

- Fords are the least expensive of the crossings, with maximum load limits.

- CCS crossing structures consist of clean, washed gravel and cellular confinement system blocks. CCS are appropriate for streams that would benefit from an influx of gravel; for example, salmonid streams, streams or rivers below reservoirs, and urban, channelized streams. Many urban stream systems are gravel-deprived due to human influences, such as dams, gravel mines, and concrete channels.
- CCS allow designers to use either angular or naturally occurring rounded gravel, because the cells provide the necessary structure and stability. In fact, natural gravel is optimal for this technique, because of the habitat improvement it will provide after removal of the CCS.
- A gravel depth of 6 to 12 in. for a CCS structure is sufficient to support most construction equipment.
- An advantage of a CCS crossing structure is that relatively little rock or gravel is needed, because the CCS provides the stability.
- Bridges are generally more expensive to design and construct, but provide the least disturbance of the streambed and constriction of the waterway flows.

Construction and Use

- Stabilize construction roadways, adjacent work area, and stream bottom against erosion.
- Construct during dry periods to minimize stream disturbance and reduce costs.
- Construct at or near the natural elevation of the streambed to prevent potential flooding upstream of the crossing.
- Install temporary erosion control BMPs in accordance with erosion control BMP fact sheets to minimize erosion of embankment into flow lines.
- Any temporary artificial obstruction placed within flowing water should only be built from material, such as clean gravel or sandbags, that will not introduce sediment or silt into the watercourse.
- Temporary water body crossings and encroachments should be constructed to minimize scour. Cobbles used for temporary water body crossings or encroachments should be clean, rounded river cobble.
- Vehicles and equipment should not be driven, operated, fueled, cleaned, maintained, or stored in the wet or dry portions of a water body where wetland vegetation, riparian vegetation, or aquatic organisms may be destroyed.
- The exterior of vehicles and equipment that will encroach on the water body within the project should be maintained free of grease, oil, fuel, and residues.
- Drip pans should be placed under all vehicles and equipment placed on docks, barges, or other structures over water bodies when the vehicle or equipment is planned to be idle for more than one hour.

- Disturbance or removal of vegetation should not exceed the minimum necessary to complete operations. Precautions should be taken to avoid damage to vegetation by people or equipment. Disturbed vegetation should be replaced with the appropriate soil stabilization measures.
- Riparian vegetation, when removed pursuant to the provisions of the work, should be cut off no lower than ground level to promote rapid re-growth. Access roads and work areas built over riparian vegetation should be covered by a sufficient layer of clean river run cobble to prevent damage to the underlying soil and root structure. The cobble must be removed upon completion of project activities.
- Conceptual temporary stream crossings are shown in the attached figures.

Costs

Caltrans Construction Cost index for temporary bridge crossings is $45-$95/ft^2.

Inspection and Maintenance

- Inspect and verify that activity-based BMPs are in place prior to the commencement of associated activities. While activities associated with the BMP are under way, inspect weekly during the rainy season and at two week intervals in the non-rainy season to verify continued BMP implementation.
- Check for blockage in the channel, sediment buildup or trapped debris in culverts, blockage behind fords or under bridges
- Check for erosion of abutments, channel scour, riprap displacement, or piping in the soil
- Check for structural weakening of the temporary crossings, such as cracks, and undermining of foundations and abutments
- Remove sediment that collects behind fords, in culverts, and under bridges periodically
- Replace lost or displaced aggregate from inlets and outlets of culverts and cellular confinement systems
- Remove temporary crossing promptly when it is no longer needed

References

California Bank and Shore Rock Slope Protection Design – Practitioners Guide and Field Evaluations of Riprap Methods, Caltrans Study No. F90TL03, October 2000.

Stormwater Quality Handbooks - Construction Site Best Management Practices (BMPs) Manual, State of California Department of Transportation (Caltrans), November 2000.

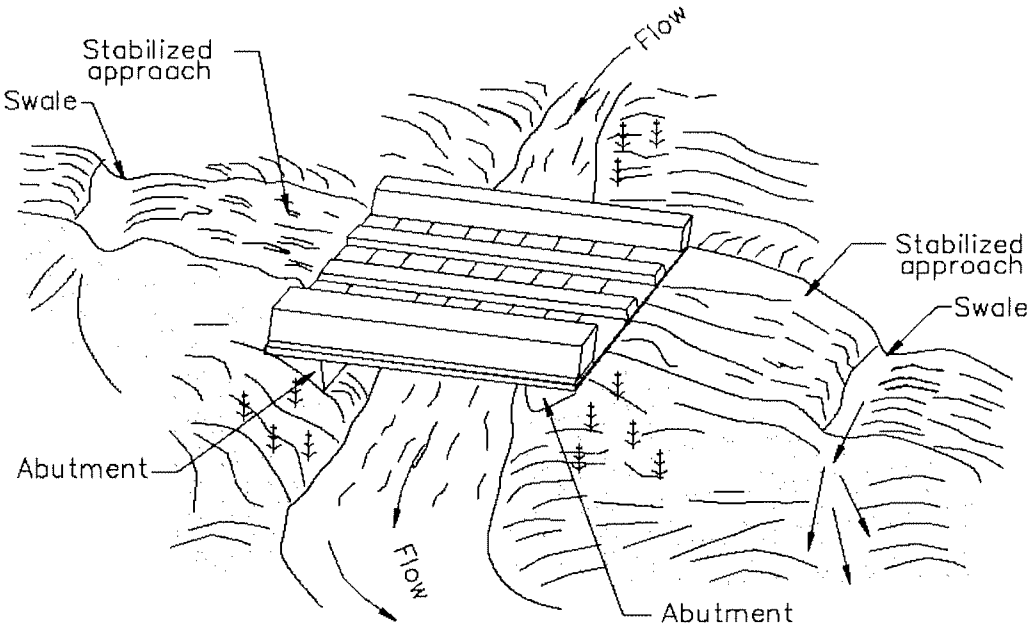

NOTE:
Surface flow of road diverted by swale and/or dike.

TYPICAL BRIDGE CROSSING
NOT TO SCALE

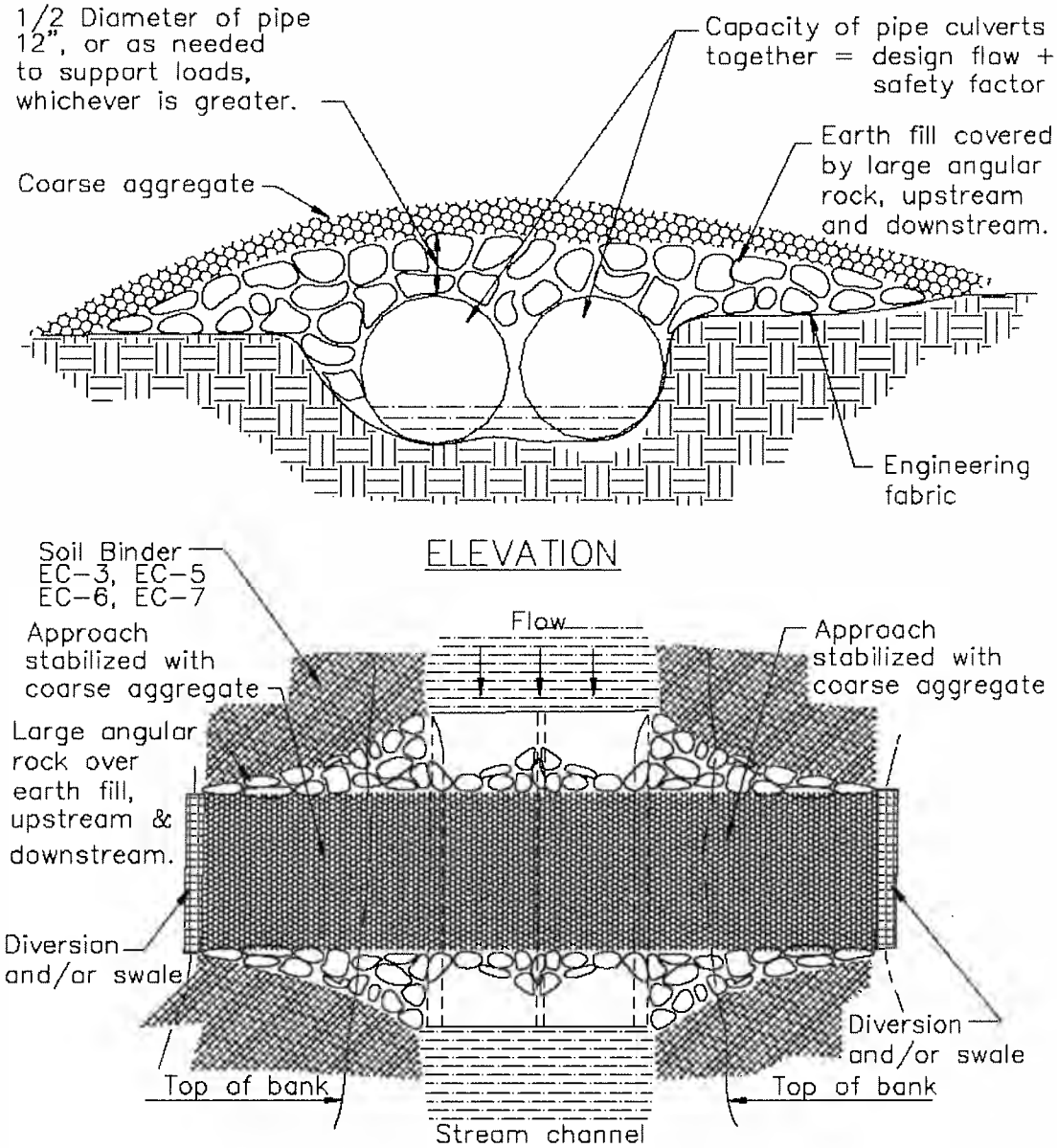

TYPICAL CULVERT CROSSING
NOT TO SCALE

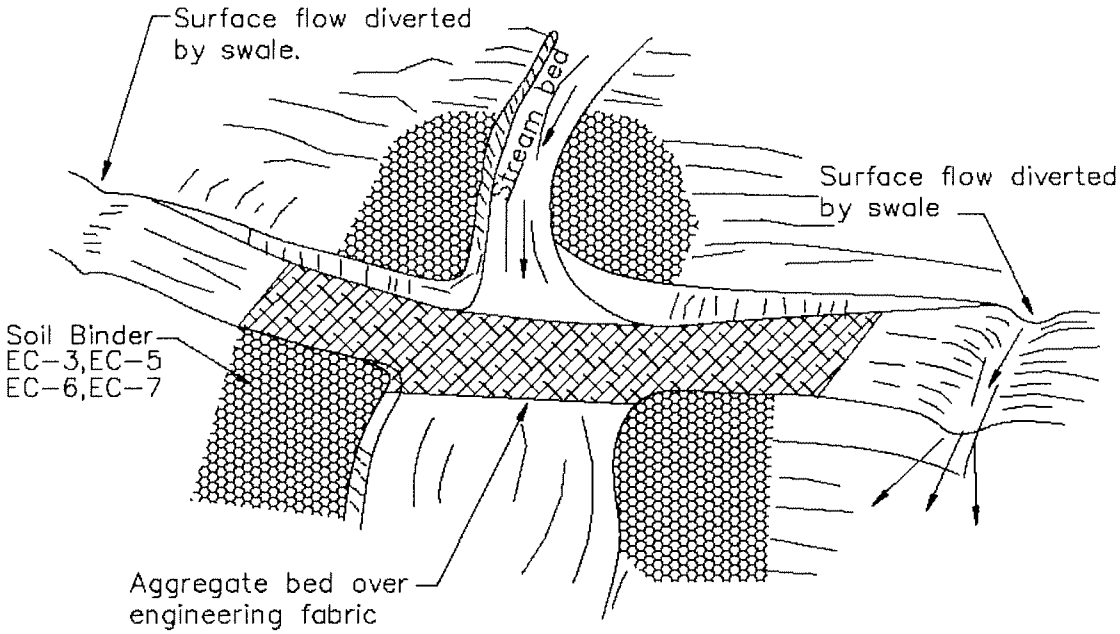

Aggregate approch
1:5 (V:H) Maximum slope on road

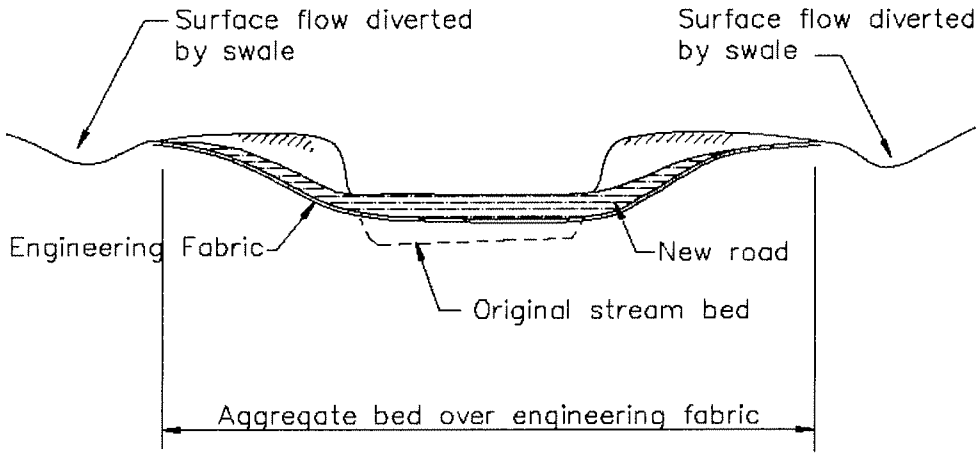

TYPICAL FORD CROSSING
NOT TO SCALE

Clear Water Diversion NS-5

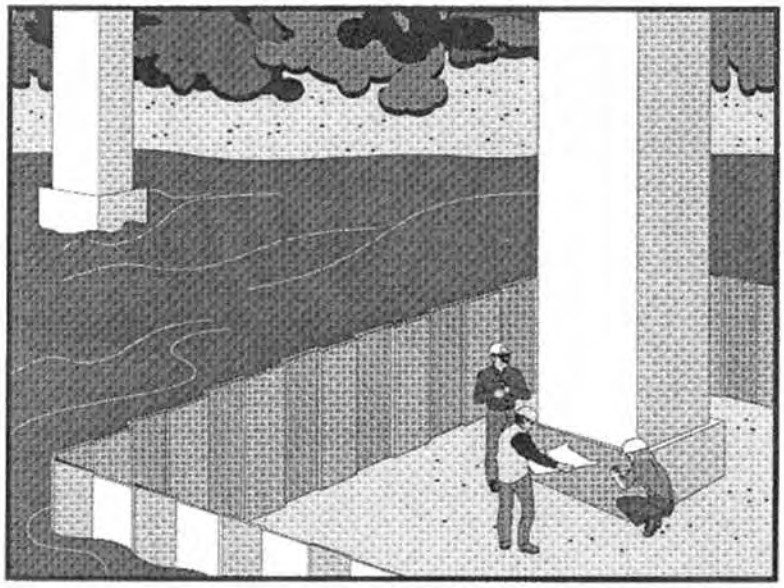

Objectives

EC	Erosion Control	
SE	Sediment Control	
TR	Tracking Control	
WE	Wind Erosion Control	
NS	Non-Stormwater Management Control	☑
WM	Waste Management and Materials Pollution Control	

Legend:
☑ Primary Objective
☒ Secondary Objective

Targeted Constituents

Sediment	☑
Nutrients	
Trash	
Metals	
Bacteria	
Oil and Grease	
Organics	

Potential Alternatives

None

Description and Purpose

Clear water diversion consists of a system of structures and measures that intercept clear surface water runoff upstream of a project, transport it around the work area, and discharge it downstream with minimal water quality degradation from either the project construction operations or the construction of the diversion. Clear water diversions are used in a waterway to enclose a construction area and reduce sediment pollution from construction work occurring in or adjacent to water. Structures commonly used as part of this system include diversion ditches, berms, dikes, slope drains, rock, gravel bags, wood, aqua barriers, cofferdams, filter fabric or turbidity curtains, drainage and interceptor swales, pipes, or flumes.

Suitable Applications

A clear water diversion is typically implemented where appropriate permits (1601 Agreement) have been secured and work must be performed in a flowing stream or water body.

- Clear water diversions are appropriate for isolating construction activities occurring within or near a water body such as streambank stabilization, or culvert, bridge, pier or abutment installation. They may also be used in combination with other methods, such as clear water bypasses and/or pumps.
- Pumped diversions are suitable for intermittent and low flow streams.
- Excavation of a temporary bypass channel, or passing the flow through a heavy pipe (called a "flume") with a trench

excavated under it, is appropriate for the diversion of streams less than 20 ft wide, with flow rates less than 100 cfs.

- Clear water diversions incorporating clean washed gravel may be appropriate for use in salmonid spawning streams.

Limitations

- Diversion and encroachment activities will usually disturb the waterway during installation and removal of diversion structures.
- Installation may require Regional Water Quality Control Board (RWQCB) 401 Certification, U.S. Army Corps of Engineers 404 permit and approval by California Department of Fish and Game. If numerical-based water quality standards are mentioned in any of these and other related permits, testing and sampling may be required.
- Diversion and encroachment activities may constrict the waterway, which can obstruct flood flows and cause flooding or washouts. Diversion structures should not be installed without identifying potential impacts to the stream channel.
- Diversion or isolation activities are not appropriate in channels where there is insufficient stream flow to support aquatic species in the area dewatered as a result of the diversion.
- Diversion or isolation activities are inappropriate in deep water unless designed or reviewed by an engineer registered in California.
- Diversion or isolation activities should not completely dam stream flow.
- Dewatering and removal may require additional sediment control or water treatment. See NS-2, Dewatering Operations.
- Not appropriate if installation, maintenance, and removal of the structures will disturb sensitive aquatic species of concern.

Implementation

General

- Implement guidelines presented in NS-17, Streambank Stabilization to minimize impacts to streambanks.
- Where working areas encroach on flowing streams, barriers adequate to prevent the flow of muddy water into streams should be constructed and maintained between working areas and streams. During construction of the barriers, muddying of streams should be held to a minimum.
- Diversion structures must be adequately designed to accommodate fluctuations in water depth or flow volume due to tides, storms, flash floods, etc.
- Heavy equipment driven in wet portions of a water body to accomplish work should be completely clean of petroleum residue, and water levels should be below the fuel tanks, gearboxes, and axles of the equipment unless lubricants and fuels are sealed such that inundation by water will not result in discharges of fuels, oils, greases, or hydraulic fluids.

- Excavation equipment buckets may reach out into the water for the purpose of removing or placing fill materials. Only the bucket of the crane/ excavator/backhoe may operate in a water body. The main body of the crane/excavator/backhoe should not enter the water body except as necessary to cross the stream to access the work site.
- Stationary equipment such as motors and pumps located within or adjacent to a water body, should be positioned over drip pans.
- When any artificial obstruction is being constructed, maintained, or placed in operation, sufficient water should, at all times, be allowed to pass downstream to maintain aquatic life.
- Equipment should not be parked below the high water mark unless allowed by a permit.
- Disturbance or removal of vegetation should not exceed the minimum necessary to complete operations. Precautions should be taken to avoid damage to vegetation by people or equipment. Disturbed vegetation should be replaced with the appropriate erosion control measures.
- Riparian vegetation approved for trimming as part of the project should be cut off no lower than ground level to promote rapid re-growth. Access roads and work areas built over riparian vegetation should be covered by a sufficient layer of clean river run cobble to prevent damage to the underlying soil and root structure. The cobble should be removed upon completion of project activities.
- Drip pans should be placed under all vehicles and equipment placed on docks, barges, or other structures over water bodies when the vehicle or equipment is planned to be idle for more than 1 hour.
- Where possible, avoid or minimize diversion and encroachment impacts by scheduling construction during periods of low flow or when the stream is dry. Scheduling should also consider seasonal releases of water from dams, fish migration and spawning seasons, and water demands due to crop irrigation.
- Construct diversion structures with materials free of potential pollutants such as soil, silt, sand, clay, grease, or oil.

Temporary Diversions and Encroachments

- Construct diversion channels in accordance with EC-9, Earth Dikes and Drainage Swales.
- In high flow velocity areas, stabilize slopes of embankments and diversion ditches using an appropriate liner, in accordance with EC-7, Geotextiles and Mats, or use rock slope protection.
- Where appropriate, use natural streambed materials such as large cobbles and boulders for temporary embankment and slope protection, or other temporary soil stabilization methods.
- Provide for velocity dissipation at transitions in the diversion, such as the point where the stream is diverted to the channel and the point where the diverted stream is returned to its natural channel. See also EC-10, Velocity Dissipation Devices.

Temporary Dry Construction Areas

- When dewatering behind temporary structures to create a temporary dry construction area, such as cofferdams, pass pumped water through a sediment-settling device, such as a portable tank or settling basin, before returning water to the water body. See also NS-2, Dewatering Operations.

- Any substance used to assemble or maintain diversion structures, such as form oil, should be non-toxic and non-hazardous.

- Any material used to minimize seepage underneath diversion structures, such as grout, should be non-toxic, non-hazardous, and as close to a neutral pH as possible.

Comparison of Diversion and Isolation Techniques:

- Gravel bags are relatively inexpensive, but installation and removal can be labor intensive. It is also difficult to dewater the isolated area. Sandbags should not be used for this technique in rivers or streams, as sand should never be put into or adjacent to a stream, even if encapsulated in geotextile.

- Gravel Bag Berms (SE-6) used in conjunction with an impermeable membrane are cost effective, and can be dewatered relatively easily. If spawning gravel is used, the impermeable membrane can be removed from the stream, and the gravel can be spread out and left as salmonid spawning habitat if approved in the permit. Only clean, washed gravel should be used for both the gravel bag and gravel berm techniques.

- Cofferdams are relatively expensive, but frequently allow full dewatering. Also, many options now available are relatively easy to install.

- Sheet pile enclosures are a much more expensive solution, but do allow full dewatering. This technique is not well suited to small streams, but can be effective on large rivers or lakes, and where staging and heavy equipment access areas are available.

- K-rails are an isolation method that does not allow full dewatering, but can be used in small to large watercourses, and in fast-water situations.

- A relatively inexpensive isolation method is filter fabric isolation. This method involves placement of gravel bags or continuous berms to 'key-in' the fabric, and subsequently staking the fabric in place. This method should be used in relatively calm water, and can be used in smaller streams. Note that this is not a dewatering method, but rather a sediment isolation method.

- Turbidity curtains should be used where sediment discharge to a stream is unavoidable. They can also be used for in-stream construction, when dewatering an area is not required.

- When used in watercourses or streams, cofferdams must be used in accordance with permit requirements.

- Manufactured diversion structures should be installed following manufacturer's specifications.

- Filter fabric and turbidity curtain isolation installation methods can be found in the specific technique descriptions that follow.

Filter Fabric Isolation Technique

Definition and Purpose

A filter fabric isolation structure is a temporary structure built into a waterway to enclose a construction area and reduce sediment pollution from construction work in or adjacent to water. This structure is composed of filter fabric, gravel bags, and steel t-posts.

Appropriate Applications

- Filter fabric may be used for construction activities such as streambank stabilization, or culvert, bridge, pier or abutment installation. It may also be used in combination with other methods, such as clean water bypasses and/or pumps.
- Filter fabric isolation is relatively inexpensive. This method involves placement of gravel bags or continuous berms to 'key-in' the fabric, and subsequently staking the fabric in place.
- If spawning gravel is used, all other components of the isolation can be removed from the stream, and the gravel may be spread out and left as salmonid spawning habitat if approved in the permit. Whether spawning gravel or other types of gravel are used, only clean washed gravel should be used as infill for the gravel bags or continuous berm.
- This method should be used in relatively calm water, and can be used in smaller streams. This is not a dewatering method, but rather a sediment isolation method.
- Water levels inside and outside the fabric curtain must be about the same, as differential heads will cause the curtain to collapse.

Limitations

- Do not use if the installation, maintenance and removal of the structures will disturb sensitive aquatic species of concern.
- Filter fabrics are not appropriate for projects where dewatering is necessary.
- Filter fabrics are not appropriate to completely dam stream flow.

Design and Installation

- For the filter fabric isolation method, a non-woven or heavy-duty fabric is recommended over standard silt fence. Using rolled geotextiles allows non-standard widths to be used.
- Anchor filter fabric with gravel bags filled with clean, washed gravel. Do not use sand. If a bag should split open, the gravel can be left in the stream, where it can provide aquatic habitat benefits. If a sandbag splits open in a watercourse, the sand could cause a decrease in water quality, and could bury sensitive aquatic habitat.
- Another anchor alternative is a continuous berm, made with the Continuous Berm Machine. This is a gravel-filled bag that can be made in very long segments. The length of the berms is usually limited to 18 ft for ease of handling (otherwise, it gets too heavy to move).

- Place the fabric on the bottom of the stream, and place either a bag of clean, washed gravel or a continuous berm over the bottom of the silt fence fabric, such that a bag-width of fabric lies on the stream bottom. The bag should be placed on what will be the outside of the isolation area.
- Pull the fabric up, and place a metal t-post immediately behind the fabric, on the inside of the isolation area; attach the silt fence to the post with three diagonal nylon ties.
- Continue placing fabric as described above until the entire work area has been isolated, staking the fabric at least every 6 ft.

Inspection and Maintenance

- Immediately repair any gaps, holes or scour.
- Remove and properly dispose of sediment buildup.
- Remove BMP upon completion of construction activity. Recycle or reuse if applicable.
- Revegetate areas disturbed by BMP removal if needed.

Turbidity Curtain Isolation Technique

Definition and Purpose

A turbidity curtain is a fabric barrier used to isolate the near shore work area. The barriers are intended to confine the suspended sediment. The curtain is a floating barrier, and thus does not prevent water from entering the isolated area; rather, it prevents suspended sediment from getting out.

Appropriate Applications

Turbidity curtains should be used where sediment discharge to a stream is unavoidable. They are used when construction activities adjoin quiescent waters, such as lakes, ponds, and slow flowing rivers. The curtains are designed to deflect and contain sediment within a limited area and provide sufficient retention time so that the sediment particles will fall out of suspension.

Limitations

- Turbidity curtains should not be used in flowing water; they are best suited for use in ponds, lakes, and very slow-moving rivers.
- Turbidity curtains should not be placed across the width of a channel.
- Removing sediment that has been deflected and settled out by the curtain may create a discharge problem through the resuspension of particles and by accidental dumping by the removal equipment.

Design and Installation

- Turbidity curtains should be oriented parallel to the direction of flow.
- The curtain should extend the entire depth of the watercourse in calm-water situations.
- In wave conditions, the curtain should extend to within 1 ft of the bottom of the watercourse, such that the curtain does not stir up sediment by hitting the bottom repeatedly. If it is

desirable for the curtain to reach the bottom in an active-water situation, a pervious filter fabric may be used for the bottom 1 ft.

- The top of the curtain should consist of flexible flotation buoys, and the bottom should be held down by a load line incorporated into the curtain fabric. The fabric should be a brightly colored impervious mesh.
- The curtain should be held in place by anchors placed at least every 100 ft.
- First, place the anchors, then tow the fabric out in a furled condition, and connect to the anchors. The anchors should be connected to the flotation devices, and not to the bottom of the curtain. Once in place, cut the furling lines, and allow the bottom of the curtain to sink.
- Consideration must be given to the probable outcome of the removal procedure. It must be determined if it will create more of a sediment problem through re-suspension of the particles or by accidental dumping of material during removal. It is recommended that the soil particles trapped by the turbidity curtain only be removed if there has been a significant change in the original contours of the affected area in the watercourse.
- Particles should always be allowed to settle for a minimum of 6 to 12 hours prior to their removal or prior to removal of the turbidity curtain.

Maintenance and Inspection:

- The curtain should be inspected for holes or other problems, and any repairs needed should be made promptly.
- Allow sediment to settle for 6 to 12 hours prior to removal of sediment or curtain. This means that after removing sediment, wait an additional 6 to 12 hours before removing the curtain.
- To remove, install furling lines along the curtain, detach from anchors, and tow out of the water.

K-rail River Isolation

Definition and Purpose

This temporary sediment control or stream isolation method uses K-rails to form the sediment deposition area, or to isolate the in-stream or near-bank construction area.

Barriers are placed end-to-end in a pre-designed configuration and gravel-filled bags are used at the toe of the barrier and at their abutting ends to seal and prevent movement of sediment beneath or through the barrier walls.

Appropriate Applications

The K-rail isolation can be used in streams with higher water velocities than many other isolation techniques.

- This technique is also useful at the toe of embankments, and cut or fill slopes.

Limitations

- The K-rail method should not be used to dewater a project site, as the barrier is not watertight.

Design and Installation

- To create a floor for the K-rail, move large rocks and obstructions. Place washed gravel and gravel-filled bags to create a level surface for K-rails to sit. Washed gravel should always be used.
- Place the bottom two K-rails adjacent to each other, and parallel to the direction of flow; fill the center portion with gravel bags. Then place the third K-rail on top of the bottom two. There should be sufficient gravel bags between the bottom K-rails such that the top rail is supported by the gravel. Place plastic sheeting around the K-rails, and secure at the bottom with gravel bags.
- Further support can be added by pinning and cabling the K-rails together. Also, large riprap and boulders can be used to support either side of the K-rail, especially where there is strong current.

Inspection and Maintenance:

- The barrier should be inspected and any leaks, holes, or other problems should be addressed immediately.
- Sediment should be allowed to settle for at least 6 to 12 hours prior to removal of sediment, and for 6 to 12 hours prior to removal of the barrier.

Stream Diversions

The selection of which stream diversion technique to use will depend upon the type of work involved, physical characteristics of the site, and the volume of water flowing through the project.

Advantages of a Pumped Diversion

- Downstream sediment transport can be nearly eliminated.
- Dewatering of the work area is possible.
- Pipes can be moved around to allow construction operations.
- The dams can serve as temporary access to the site.
- Increased flows can be managed by adding more pumping capacity.

Disadvantages of a Pumped Diversion

- Flow volume is limited by pump capacity.
- A pumped diversion requires 24 hour monitoring of pumps.
- Sudden rain could overtop dams.
- Erosion at the outlet.

- Minor in-stream disturbance is required to install and remove dams.

Advantages of Excavated Channels and Flumes

- Excavated channels isolate work from water flow and allow dewatering.
- Excavated channels can handle larger flows than pumps.

Disadvantages of Excavated Channels and Flumes

- Bypass channel or flume must be sized to handle flows, including possible floods.
- Channels must be protected from erosion.
- Flow diversion and re-direction with small dams involves in-stream disturbance and mobilization of sediment.

Design and Installation

- Installation guidelines will vary based on existing site conditions and type of diversion used.
- Pump capacity must be sufficient for design flow.
- A standby pump is required in case a primary pump fails.
- Dam materials used to create dams upstream and downstream of diversion should be erosion resistant; materials such as steel plate, sheet pile, sandbags, continuous berms, inflatable water bladders, etc., would be acceptable.

When constructing a diversion channel, begin excavation of the channel at the proposed downstream end, and work upstream. Once the watercourse to be diverted is reached and the excavated channel is stable, breach the upstream end and allow water to flow down the new channel. Once flow has been established in the diversion channel, install the diversion weir in the main channel; this will force all water to be diverted from the main channel.

Inspection and Maintenance

- Pumped diversions require 24 hour monitoring of pumps.
- Inspect embankments and diversion channels for damage to the linings, accumulating debris, sediment buildup, and adequacy of the slope protection. Remove debris and repair linings and slope protection as required. Remove holes, gaps, or scour.
- Upon completion of work, the diversion or isolation structure should be removed and flow should be redirected through the new culvert or back into the original stream channel. Recycle or reuse if applicable.
- Revegetate areas disturbed by BMP removal if needed.

Costs

Costs of clear water diversion vary considerably and can be very high.

Inspection and Maintenance

- Inspect and verify that activity-based BMPs are in place prior to the commencement of associated activities. While activities associated with the BMP are under way, inspect weekly during the rainy season and at two-week intervals in the non-rainy season to verify continued BMP implementation.
- Inspect BMPs subject to non-stormwater discharges daily while non-stormwater discharges occur.
- Refer to BMP-specific inspection and maintenance requirements.

References

California Bank and Shore Rock Slope Protection Design – Practitioners Guide and Field Evaluations of Riprap Methods, Caltrans Study No. F90TL03, October, 2000.

Stormwater Quality Handbooks - Construction Site Best Management Practices (BMPs) Manual, State of California Department of Transportation (Caltrans), November 2000.

Illicit Connection/Discharge NS-6

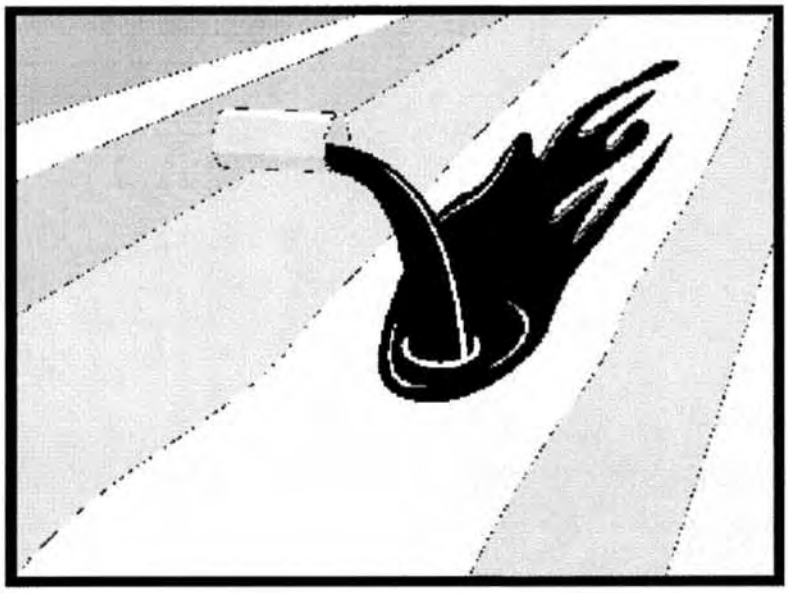

Objectives		
EC	Erosion Control	
SE	Sediment Control	
TR	Tracking Control	
WE	Wind Erosion Control	
NS	Non-Stormwater Management Control	☑
WM	Waste Management and Materials Pollution Control	

Legend:
☑ Primary Objective
☒ Secondary Objective

Targeted Constituents	
Sediment	
Nutrients	☑
Trash	☑
Metals	☑
Bacteria	☑
Oil and Grease	☑
Organics	☑

Potential Alternatives

None

Description and Purpose

Procedures and practices designed for construction contractors to recognize illicit connections or illegally dumped or discharged materials on a construction site and report incidents.

Suitable Applications

This best management practice (BMP) applies to all construction projects. Illicit connection/discharge and reporting is applicable anytime an illicit connection or discharge is discovered or illegally dumped material is found on the construction site.

Limitations

Illicit connections and illegal discharges or dumping, for the purposes of this BMP, refer to discharges and dumping caused by parties other than the contractor. If pre-existing hazardous materials or wastes are known to exist onsite, they should be identified in the SWPPP and handled as set forth in the SWPPP.

Implementation

Planning

- Review the SWPPP. Pre-existing areas of contamination should be identified and documented in the SWPPP.
- Inspect site before beginning the job for evidence of illicit connections, illegal dumping or discharges. Document any pre-existing conditions and notify the owner.

- Inspect site regularly during project execution for evidence of illicit connections, illegal dumping or discharges.
- Observe site perimeter for evidence for potential of illicitly discharged or illegally dumped material, which may enter the job site.

Identification of Illicit Connections and Illegal Dumping or Discharges

- **General** – unlabeled and unidentifiable material should be treated as hazardous.
- **Solids** - Look for debris, or rubbish piles. Solid waste dumping often occurs on roadways with light traffic loads or in areas not easily visible from the traveled way.
- **Liquids** - signs of illegal liquid dumping or discharge can include:
  - Visible signs of staining or unusual colors to the pavement or surrounding adjacent soils
  - Pungent odors coming from the drainage systems
  - Discoloration or oily substances in the water or stains and residues detained within ditches, channels or drain boxes
  - Abnormal water flow during the dry weather season
- **Urban Areas** - Evidence of illicit connections or illegal discharges is typically detected at storm drain outfall locations or at manholes. Signs of an illicit connection or illegal discharge can include:
  - Abnormal water flow during the dry weather season
  - Unusual flows in sub drain systems used for dewatering
  - Pungent odors coming from the drainage systems
  - Discoloration or oily substances in the water or stains and residues detained within ditches, channels or drain boxes
  - Excessive sediment deposits, particularly adjacent to or near active offsite construction projects
- **Rural Areas** - Illicit connections or illegal discharges involving irrigation drainage ditches are detected by visual inspections. Signs of an illicit discharge can include:
  - Abnormal water flow during the non-irrigation season
  - Non-standard junction structures
  - Broken concrete or other disturbances at or near junction structures

Reporting

Notify the owner of any illicit connections and illegal dumping or discharge incidents at the time of discovery. For illicit connections or discharges to the storm drain system, notify the local stormwater management agency. For illegal dumping, notify the local law enforcement agency.

Cleanup and Removal

The responsibility for cleanup and removal of illicit or illegal dumping or discharges will vary by location. Contact the local stormwater management agency for further information.

Costs

Costs to look for and report illicit connections and illegal discharges and dumping are low. The best way to avoid costs associated with illicit connections and illegal discharges and dumping is to keep the project perimeters secure to prevent access to the site, to observe the site for vehicles that should not be there, and to document any waste or hazardous materials that exist onsite before taking possession of the site.

Inspection and Maintenance

- Inspect and verify that activity-based BMPs are in place prior to the commencement of associated activities. While activities associated with the BMP are under way, inspect weekly during the rainy season and at two-week intervals in the non-rainy season to verify continued BMP implementation.
- Inspect the site regularly to check for any illegal dumping or discharge.
- Prohibit employees and subcontractors from disposing of non-job related debris or materials at the construction site.
- Notify the owner of any illicit connections and illegal dumping or discharge incidents at the time of discovery.

References

Blueprint for a Clean Bay: Best Management Practices to Prevent Stormwater Pollution from Construction Related Activities; Santa Clara Valley Nonpoint Source Pollution Control Program, 1995.

Stormwater Quality Handbooks - Construction Site Best Management Practices (BMPs) Manual, State of California Department of Transportation (Caltrans), November 2000.

Stormwater Management for Construction Activities, Developing Pollution Prevention Plans and Best Management Practices, EPA 832-R-92005; USEPA, April 1992.

Vehicle and Equipment Cleaning NS-8

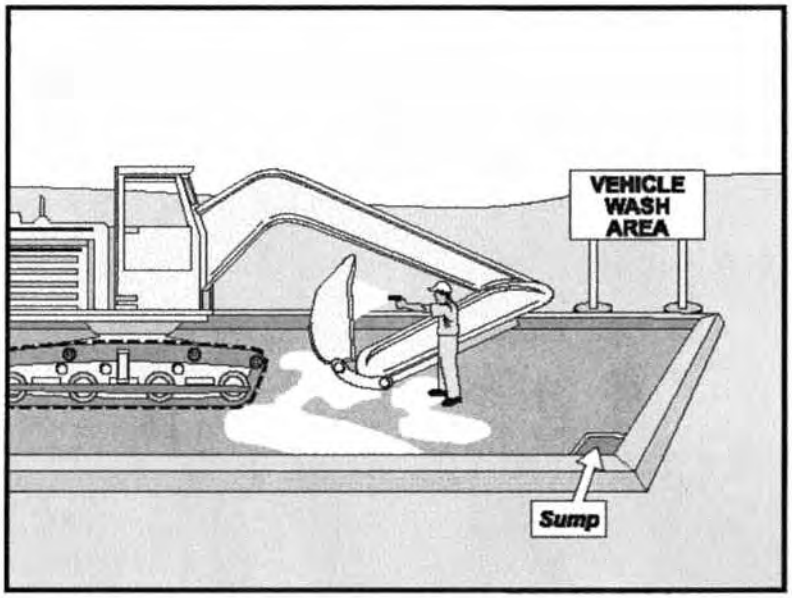

Objectives

EC	Erosion Control	
SE	Sediment Control	
TR	Tracking Control	
WE	Wind Erosion Control	
NS	Non-Stormwater Management Control	☑
WM	Waste Management and Materials Pollution Control	

Legend:
☑ Primary Objective
☒ Secondary Objective

Targeted Constituents

Sediment	☑
Nutrients	☑
Trash	
Metals	
Bacteria	
Oil and Grease	☑
Organics	☑

Potential Alternatives

None

Description and Purpose

Vehicle and equipment cleaning procedures and practices eliminate or reduce the discharge of pollutants to stormwater from vehicle and equipment cleaning operations. Procedures and practices include but are not limited to: using offsite facilities; washing in designated, contained areas only; eliminating discharges to the storm drain by infiltrating the wash water; and training employees and subcontractors in proper cleaning procedures.

Suitable Applications

These procedures are suitable on all construction sites where vehicle and equipment cleaning is performed.

Limitations

Even phosphate-free, biodegradable soaps have been shown to be toxic to fish before the soap degrades. Sending vehicles/equipment offsite should be done in conjunction with TR-1, Stabilized Construction Entrance/Exit.

Implementation

Other options to washing equipment onsite include contracting with either an offsite or mobile commercial washing business. These businesses may be better equipped to handle and dispose of the wash waters properly. Performing this work offsite can also be economical by eliminating the need for a separate washing operation onsite.

If washing operations are to take place onsite, then:

- Use phosphate-free, biodegradable soaps.
- Educate employees and subcontractors on pollution prevention measures.
- Do not permit steam cleaning onsite. Steam cleaning can generate significant pollutant concentrates.
- Cleaning of vehicles and equipment with soap, solvents or steam should not occur on the project site unless resulting wastes are fully contained and disposed of. Resulting wastes should not be discharged or buried, and must be captured and recycled or disposed according to the requirements of WM-10, Liquid Waste Management or WM-6, Hazardous Waste Management, depending on the waste characteristics. Minimize use of solvents. Use of diesel for vehicle and equipment cleaning is prohibited.
- All vehicles and equipment that regularly enter and leave the construction site must be cleaned offsite.
- When vehicle and equipment washing and cleaning must occur onsite, and the operation cannot be located within a structure or building equipped with appropriate disposal facilities, the outside cleaning area should have the following characteristics:
  - Located away from storm drain inlets, drainage facilities, or watercourses
  - Paved with concrete or asphalt and bermed to contain wash waters and to prevent runon and runoff
  - Configured with a sump to allow collection and disposal of wash water
  - No discharge of wash waters to storm drains or watercourses
  - Used only when necessary
- When cleaning vehicles and equipment with water:
  - Use as little water as possible. High-pressure sprayers may use less water than a hose and should be considered
  - Use positive shutoff valve to minimize water usage
  - Facility wash racks should discharge to a sanitary sewer, recycle system or other approved discharge system and must not discharge to the storm drainage system, watercourses, or to groundwater

Costs

Cleaning vehicles and equipment at an offsite facility may reduce overall costs for vehicle and equipment cleaning by eliminating the need to provide similar services onsite. When onsite cleaning is needed, the cost to establish appropriate facilities is relatively low on larger, long-duration projects, and moderate to high on small, short-duration projects.

Inspection and Maintenance

- Inspect and verify that activity-based BMPs are in place prior to the commencement of associated activities. While activities associated with the BMP are under way, inspect weekly during the rainy season and at two-week intervals in the non-rainy season to verify continued BMP implementation.
- Inspect BMPs subject to non-stormwater discharges daily while non-stormwater discharges occur.
- Inspection and maintenance is minimal, although some berm repair may be necessary.
- Monitor employees and subcontractors throughout the duration of the construction project to ensure appropriate practices are being implemented.
- Inspect sump regularly and remove liquids and sediment as needed.
- Prohibit employees and subcontractors from washing personal vehicles and equipment on the construction site.

References

Stormwater Quality Handbooks - Construction Site Best Management Practices (BMPs) Manual, State of California Department of Transportation (Caltrans), November 2000.

Swisher, R.D. Surfactant Biodegradation, Marcel Decker Corporation, 1987.

Vehicle and Equipment Fueling NS-9

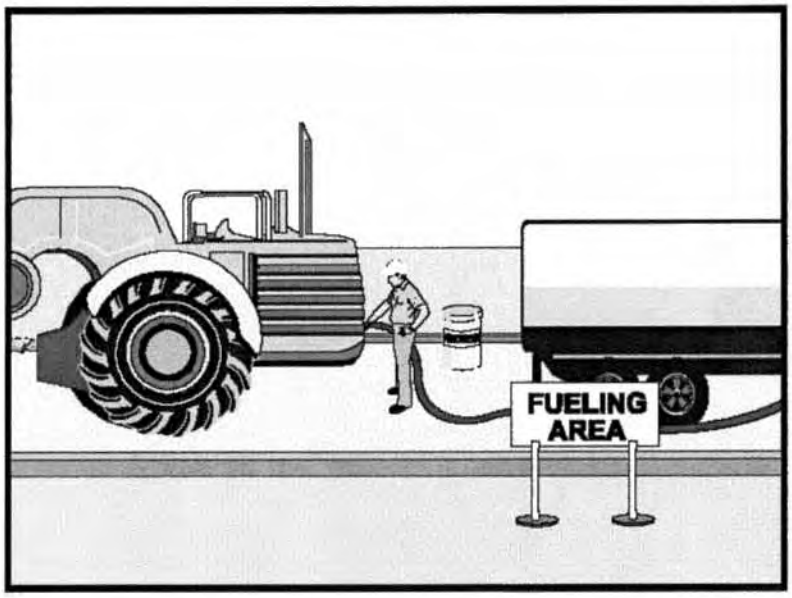

Objectives

EC	Erosion Control	
SE	Sediment Control	
TR	Tracking Control	
WE	Wind Erosion Control	
NS	Non-Stormwater Management Control	☑
WM	Waste Management and Materials Pollution Control	

Legend:
☑ Primary Objective
☒ Secondary Objective

Targeted Constituents

Sediment	
Nutrients	
Trash	
Metals	
Bacteria	
Oil and Grease	☑
Organics	

Potential Alternatives

None

Description and Purpose

Vehicle equipment fueling procedures and practices are designed to prevent fuel spills and leaks, and reduce or eliminate contamination of stormwater. This can be accomplished by using offsite facilities, fueling in designated areas only, enclosing or covering stored fuel, implementing spill controls, and training employees and subcontractors in proper fueling procedures.

Suitable Applications

These procedures are suitable on all construction sites where vehicle and equipment fueling takes place.

Limitations

Onsite vehicle and equipment fueling should only be used where it is impractical to send vehicles and equipment offsite for fueling. Sending vehicles and equipment offsite should be done in conjunction with TR-1, Stabilized Construction Entrance/ Exit.

Implementation

- Use offsite fueling stations as much as possible. These businesses are better equipped to handle fuel and spills properly. Performing this work offsite can also be economical by eliminating the need for a separate fueling area at a site.
- Discourage "topping-off" of fuel tanks.

- Absorbent spill cleanup materials and spill kits should be available in fueling areas and on fueling trucks, and should be disposed of properly after use.
- Drip pans or absorbent pads should be used during vehicle and equipment fueling, unless the fueling is performed over an impermeable surface in a dedicated fueling area.
- Use absorbent materials on small spills. Do not hose down or bury the spill. Remove the adsorbent materials promptly and dispose of properly.
- Avoid mobile fueling of mobile construction equipment around the site; rather, transport the equipment to designated fueling areas. With the exception of tracked equipment such as bulldozers and large excavators, most vehicles should be able to travel to a designated area with little lost time.
- Train employees and subcontractors in proper fueling and cleanup procedures.
- When fueling must take place onsite, designate an area away from drainage courses to be used. Fueling areas should be identified in the SWPPP.
- Dedicated fueling areas should be protected from stormwater runon and runoff, and should be located at least 50 ft away from downstream drainage facilities and watercourses. Fueling must be performed on level-grade areas.
- Protect fueling areas with berms and dikes to prevent runon, runoff, and to contain spills.
- Nozzles used in vehicle and equipment fueling should be equipped with an automatic shutoff to control drips. Fueling operations should not be left unattended.
- Use vapor recovery nozzles to help control drips as well as air pollution where required by Air Quality Management Districts (AQMD).
- Federal, state, and local requirements should be observed for any stationary above ground storage tanks.

Costs

- All of the above measures are low cost except for the capital costs of above ground tanks that meet all local environmental, zoning, and fire codes.

Inspection and Maintenance

- Vehicles and equipment should be inspected each day of use for leaks. Leaks should be repaired immediately or problem vehicles or equipment should be removed from the project site.
- Keep ample supplies of spill cleanup materials onsite.
- Immediately clean up spills and properly dispose of contaminated soil and cleanup materials.

References

Blueprint for a Clean Bay: Best Management Practices to Prevent Stormwater Pollution from Construction Related Activities; Santa Clara Valley Nonpoint Source Pollution Control Program, 1995.

Coastal Nonpoint Pollution Control Program: Program Development and Approval Guidance, Working Group Working Paper; USEPA, April 1992.

Stormwater Quality Handbooks - Construction Site Best Management Practices (BMPs) Manual, State of California Department of Transportation (Caltrans), November 2000.

Stormwater Management for Construction Activities, Developing Pollution Prevention Plans and Best Management Practices, EPA 832-R-92005; USEPA, April 1992.

Vehicle & Equipment Maintenance NS-10

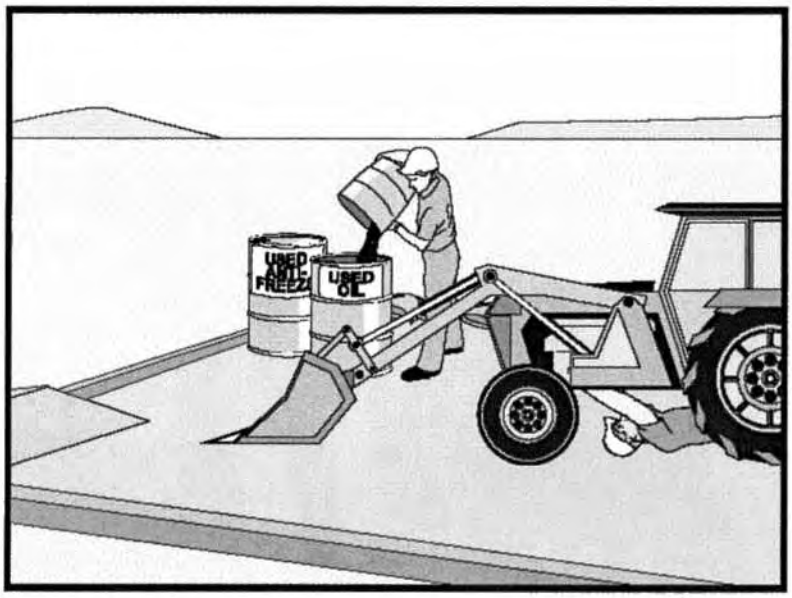

Objectives

EC	Erosion Control	
SE	Sediment Control	
TR	Tracking Control	
WE	Wind Erosion Control	
NS	Non-Stormwater Management Control	☑
WM	Waste Management and Materials Pollution Control	

Legend:
☑ Primary Objective
☒ Secondary Objective

Targeted Constituents

Sediment	
Nutrients	☑
Trash	☑
Metals	
Bacteria	
Oil and Grease	☑
Organics	☑

Potential Alternatives

None

Description and Purpose

Prevent or reduce the contamination of stormwater resulting from vehicle and equipment maintenance by running a "dry and clean site". The best option would be to perform maintenance activities at an offsite facility. If this option is not available then work should be performed in designated areas only, while providing cover for materials stored outside, checking for leaks and spills, and containing and cleaning up spills immediately. Employees and subcontractors must be trained in proper procedures.

Suitable Applications

These procedures are suitable on all construction projects where an onsite yard area is necessary for storage and maintenance of heavy equipment and vehicles.

Limitations

Onsite vehicle and equipment maintenance should only be used where it is impractical to send vehicles and equipment offsite for maintenance and repair. Sending vehicles/equipment offsite should be done in conjunction with TR-1, Stabilized Construction Entrance/Exit.

Outdoor vehicle or equipment maintenance is a potentially significant source of stormwater pollution. Activities that can contaminate stormwater include engine repair and service, changing or replacement of fluids, and outdoor equipment storage and parking (engine fluid leaks). For further information on vehicle or equipment servicing, see NS-8, Vehicle and Equipment Cleaning, and NS-9, Vehicle and Equipment Fueling.

NS-10 Vehicle & Equipment Maintenance

Implementation

- Use offsite repair shops as much as possible. These businesses are better equipped to handle vehicle fluids and spills properly. Performing this work offsite can also be economical by eliminating the need for a separate maintenance area.
- If maintenance must occur onsite, use designated areas, located away from drainage courses. Dedicated maintenance areas should be protected from stormwater runon and runoff, and should be located at least 50 ft from downstream drainage facilities and watercourses.
- Drip pans or absorbent pads should be used during vehicle and equipment maintenance work that involves fluids, unless the maintenance work is performed over an impermeable surface in a dedicated maintenance area.
- Place a stockpile of spill cleanup materials where it will be readily accessible.
- All fueling trucks and fueling areas are required to have spill kits and/or use other spill protection devices.
- Use adsorbent materials on small spills. Remove the absorbent materials promptly and dispose of properly.
- Inspect onsite vehicles and equipment daily at startup for leaks, and repair immediately.
- Keep vehicles and equipment clean; do not allow excessive build-up of oil and grease.
- Segregate and recycle wastes, such as greases, used oil or oil filters, antifreeze, cleaning solutions, automotive batteries, hydraulic and transmission fluids. Provide secondary containment and covers for these materials if stored onsite.
- Train employees and subcontractors in proper maintenance and spill cleanup procedures.
- Drip pans or plastic sheeting should be placed under all vehicles and equipment placed on docks, barges, or other structures over water bodies when the vehicle or equipment is planned to be idle for more than 1 hour.
- For long-term projects, consider using portable tents or covers over maintenance areas if maintenance cannot be performed offsite.
- Consider use of new, alternative greases and lubricants, such as adhesive greases, for chassis lubrication and fifth-wheel lubrication.
- Properly dispose of used oils, fluids, lubricants, and spill cleanup materials.
- Do not place used oil in a dumpster or pour into a storm drain or watercourse.
- Properly dispose of or recycle used batteries.
- Do not bury used tires.
- Repair leaks of fluids and oil immediately.

Listed below is further information if you must perform vehicle or equipment maintenance onsite.

Safer Alternative Products

- Consider products that are less toxic or hazardous than regular products. These products are often sold under an "environmentally friendly" label.
- Consider use of grease substitutes for lubrication of truck fifth-wheels. Follow manufacturers label for details on specific uses.
- Consider use of plastic friction plates on truck fifth-wheels in lieu of grease. Follow manufacturers label for details on specific uses.

Waste Reduction

Parts are often cleaned using solvents such as trichloroethylene, trichloroethane, or methylene chloride. Many of these cleaners are listed in California Toxic Rule as priority pollutants. These materials are harmful and must not contaminate stormwater. They must be disposed of as a hazardous waste. Reducing the number of solvents makes recycling easier and reduces hazardous waste management costs. Often, one solvent can perform a job as well as two different solvents. Also, if possible, eliminate or reduce the amount of hazardous materials and waste by substituting non-hazardous or less hazardous materials. For example, replace chlorinated organic solvents with non-chlorinated solvents. Non-chlorinated solvents like kerosene or mineral spirits are less toxic and less expensive to dispose of properly. Check the list of active ingredients to see whether it contains chlorinated solvents. The "chlor" term indicates that the solvent is chlorinated. Also, try substituting a wire brush for solvents to clean parts.

Recycling and Disposal

Separating wastes allows for easier recycling and may reduce disposal costs. Keep hazardous wastes separate, do not mix used oil solvents, and keep chlorinated solvents (like,-trichloroethane) separate from non-chlorinated solvents (like kerosene and mineral spirits). Promptly transfer used fluids to the proper waste or recycling drums. Don't leave full drip pans or other open containers lying around. Provide cover and secondary containment until these materials can be removed from the site.

Oil filters can be recycled. Ask your oil supplier or recycler about recycling oil filters.

Do not dispose of extra paints and coatings by dumping liquid onto the ground or throwing it into dumpsters. Allow coatings to dry or harden before disposal into covered dumpsters.

Store cracked batteries in a non-leaking secondary container. Do this with all cracked batteries, even if you think all the acid has drained out. If you drop a battery, treat it as if it is cracked. Put it into the containment area until you are sure it is not leaking.

Costs

All of the above are low cost measures. Higher costs are incurred to setup and maintain onsite maintenance areas.

NS-10 Vehicle & Equipment Maintenance

Inspection and Maintenance

- Inspect and verify that activity-based BMPs are in place prior to the commencement of associated activities. While activities associated with the BMP are under way, inspect weekly during the rainy season and at two-week intervals in the non-rainy season to verify continued BMP implementation.
- Inspect BMPs subject to non-stormwater discharges daily while non-stormwater discharges occur.
- Keep ample supplies of spill cleanup materials onsite.
- Maintain waste fluid containers in leak proof condition.
- Vehicles and equipment should be inspected on each day of use. Leaks should be repaired immediately or the problem vehicle(s) or equipment should be removed from the project site.
- Inspect equipment for damaged hoses and leaky gaskets routinely. Repair or replace as needed.

References

Blueprint for a Clean Bay: Best Management Practices to Prevent Stormwater Pollution from Construction Related Activities; Santa Clara Valley Nonpoint Source Pollution Control Program, 1995.

Coastal Nonpoint Pollution Control Program; Program Development and Approval Guidance, Working Group, Working Paper; USEPA, April 1992.

Stormwater Quality Handbooks - Construction Site Best Management Practices (BMPs) Manual, State of California Department of Transportation (Caltrans), November 2000.

Pile Driving Operations NS-11

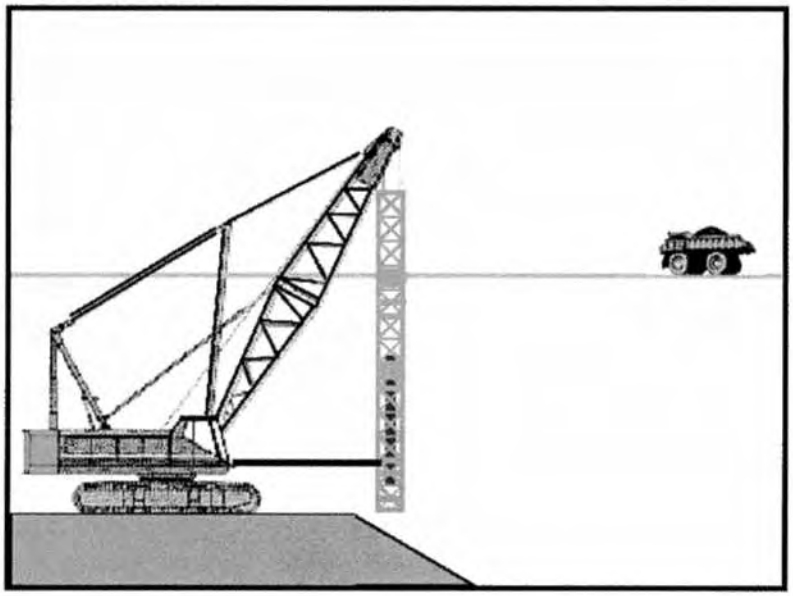

Objectives

EC	Erosion Control	
SE	Sediment Control	
TR	Tracking Control	
WE	Wind Erosion Control	
NS	Non-Stormwater Management Control	☑
WM	Waste Management and Materials Pollution Control	

Legend:

☑ Primary Objective

☒ Secondary Objective

Targeted Constituents

Sediment	☑
Nutrients	
Trash	
Metals	
Bacteria	
Oil and Grease	☑
Organics	

Potential Alternatives

None

Description and Purpose

The construction and retrofit of bridges and retaining walls often include driving piles for foundation support and shoring operations. Driven piles are typically constructed of precast concrete, steel, or timber. Driven sheet piles are also used for shoring and cofferdam construction. Proper control and use of equipment, materials, and waste products from pile driving operations will reduce or eliminate the discharge of potential pollutants to the storm drain system, watercourses, and waters of the United States.

Suitable Applications

These procedures apply to all construction sites near or adjacent to a watercourse or groundwater where permanent and temporary pile driving (impact and vibratory) takes place, including operations using pile shells as well as construction of cast-in-steel-shell and cast-in-drilled-hole piles.

Limitations

None identified.

Implementation

- Use drip pans or absorbent pads during vehicle and equipment operation, maintenance, cleaning, fueling, and storage. Refer to NS-8, Vehicle and Equipment Cleaning, NS-9, Vehicle and Equipment Fueling, and NS-10, Vehicle and Equipment Maintenance.

- Have spill kits and cleanup materials available at all locations of pile driving. Refer to WM-4, Spill Prevention and Control.
- Equipment that is stored or in use in streambeds, or on docks, barges, or other structures over water bodies should be kept leak free.
- Park equipment over plastic sheeting or equivalent where possible. Plastic is not a substitute for drip pans or absorbent pads. The storage or use of equipment in streambeds or other bodies of water must comply with all applicable permits.
- Implement other BMPs as applicable, such as NS-2, Dewatering Operations, WM-5, Solid Waste Management, WM-6, Hazardous Waste Management, and WM-10, Liquid Waste Management.
- When not in use, store pile-driving equipment away from concentrated flows of stormwater, drainage courses, and inlets. Protect hammers and other hydraulic attachments from runon and runoff by placing them on plywood and covering them with plastic or a comparable material prior to the onset of rain.
- Use less hazardous products, e.g., vegetable oil, when practicable.

Costs

All of the above measures can be low cost.

Inspection and Maintenance

- Inspect and verify that activity-based BMPs are in place prior to the commencement of associated activities. While activities associated with the BMP are under way, inspect weekly during the rainy season and at two-week intervals in the non-rainy season to verify continued BMP implementation.
- Inspect BMPs subject to non-stormwater discharges daily while non-stormwater discharges occur.
- Inspect equipment every day at startup and repair equipment as needed (i.e., worn or damaged hoses, fittings, and gaskets). Recheck equipment at shift changes or at the end of the day and scheduled repairs as needed.

References

Stormwater Quality Handbooks - Construction Site Best Management Practices (BMPs) Manual, State of California Department of Transportation (Caltrans), November 2000.

Stormwater Management for Construction Activities, Developing Pollution Prevention Plans and Best Management Practices, EPA 832-R-92005; USEPA, April 1992.

Concrete Curing NS-12

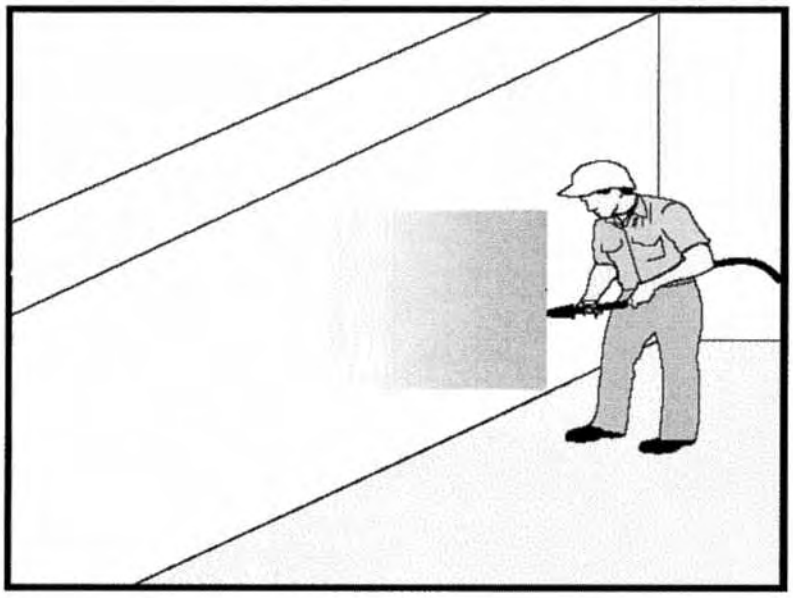

Objectives

EC	Erosion Control	
SE	Sediment Control	
TR	Tracking Control	
WE	Wind Erosion Control	
NS	Non-Stormwater Management Control	☑
WM	Waste Management and Materials Pollution Control	☑

Legend:

☑ Primary Objective

☒ Secondary Objective

Targeted Constituents

Sediment	☑
Nutrients	
Trash	
Metals	☑
Bacteria	
Oil and Grease	☑
Organics	

Potential Alternatives

None

Description and Purpose

Concrete curing is used in the construction of structures such as bridges, retaining walls, pump houses, large slabs, and structured foundations. Concrete curing includes the use of both chemical and water methods. Discharges of stormwater and non-stormwater exposed to concrete during curing may have a high pH and may contain chemicals, metals, and fines. Proper procedures reduce or eliminate the contamination of stormwater runoff during concrete curing.

Suitable Applications

Suitable applications include all projects where Portland Cement Concrete (PCC) and concrete curing chemicals are placed where they can be exposed to rainfall, runoff from other areas, or where runoff from the PCC will leave the site.

Limitations

None identified.

Implementation

Chemical Curing

- Avoid over spray of curing compounds.
- Minimize the drift of chemical cure as much as possible by applying the curing compound close to the concrete surface. Apply an amount of compound that covers the surface, but does not allow any runoff of the compound.

- Use proper storage and handling techniques for concrete curing compounds. Refer to WM-1, Material Delivery and Storage.
- Protect drain inlets prior to the application of curing compounds.
- Refer to WM-4, Spill Prevention and Control.

Water Curing for Bridge Decks, Retaining Walls, and other Structures

- Direct cure water away from inlets and watercourses to collection areas for infiltration or other means of removal in accordance with all applicable permits.
- Collect cure water at the top of slopes and transport or dispose of water in a non-erodible manner. See EC-9 Earth Dikes and Drainage Swales, EC-10, Velocity Dissipation Devices, and EC-11, Slope Drains.
- Utilize wet blankets or a similar method that maintains moisture while minimizing the use and possible discharge of water.

Costs

All of the above measures are generally low cost.

Inspection and Maintenance

- Inspect and verify that activity-based BMPs are in place prior to the commencement of associated activities. While activities associated with the BMP are under way, inspect weekly during the rainy season and at two-week intervals in the non-rainy season to verify continued BMP implementation.
- Inspect BMPs subject to non-stormwater discharges daily while non-stormwater discharges occur.
- Ensure that employees and subcontractors implement appropriate measures for storage, handling, and use of curing compounds.
- Inspect cure containers and spraying equipment for leaks.

References

Blue Print for a Clean Bay-Construction-Related Industries: Best Management Practices for Stormwater Pollution Prevention; Santa Clara Valley Non Point Source Pollution Control Program, 1992.

Stormwater Quality Handbooks - Construction Site Best Management Practices (BMPs) Manual, State of California Department of Transportation (Caltrans), November 2000.

Stormwater Management for Construction Activities, Developing Pollution Prevention Plans and Best Management Practices, EPA 832-R-92005; USEPA, April 1992.

Concrete Finishing NS-13

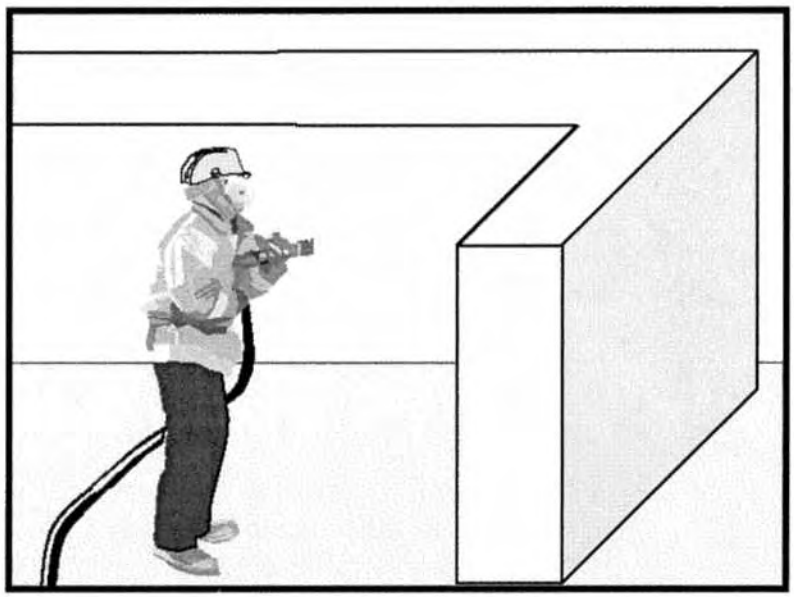

Objectives

EC	Erosion Control	
SE	Sediment Control	
TR	Tracking Control	
WE	Wind Erosion Control	
NS	Non-Stormwater Management Control	☑
WM	Waste Management and Materials Pollution Control	☑

Legend:

☑ Primary Objective

☒ Secondary Objective

Targeted Constituents

Sediment	☑
Nutrients	
Trash	
Metals	☑
Bacteria	
Oil and Grease	
Organics	☑

Potential Alternatives

None

Description and Purpose

Concrete finishing methods are used for bridge deck rehabilitation, paint removal, curing compound removal, and final surface finish appearances. Methods include sand blasting, shot blasting, grinding, or high pressure water blasting. Stormwater and non-stormwater exposed to concrete finishing by-products may have a high pH and may contain chemicals, metals, and fines. Proper procedures and implementation of appropriate BMPs can minimize the impact that concrete-finishing methods may have on stormwater and non-stormwater discharges.

Suitable Applications

These procedures apply to all construction locations where concrete finishing operations are performed.

Limitations

None identified.

Implementation

- Collect and properly dispose of water from high-pressure water blasting operations.
- Collect contaminated water from blasting operations at the top of slopes. Transport or dispose of contaminated water while using BMPs such as those for erosion control. Refer to EC-9, Earth Dikes and Drainage Swales, EC-10, Velocity Dissipation Devices, and EC-11, Slope Drains.

- Direct water from blasting operations away from inlets and watercourses to collection areas for infiltration or other means of removal (dewatering). Refer to NS-2 De-Watering Operations.
- Protect inlets during sandblasting operations. Refer to SE-10, Storm Drain Inlet Protection.
- Refer to WM-8, Concrete Waste Management for disposal of concrete based debris.
- Minimize the drift of dust and blast material as much as possible by keeping the blasting nozzle close to the surface.
- When blast residue contains a potentially hazardous waste, refer to WM-6, Hazardous Waste Management.

Costs

These measures are generally of low cost.

Inspection and Maintenance

- Inspect and verify that activity-based BMPs are in place prior to the commencement of associated activities. While activities associated with the BMP are under way, inspect weekly during the rainy season and at two-week intervals in the non-rainy season to verify continued BMP implementation.
- Inspect BMPs subject to non-stormwater discharges daily while non-stormwater discharges occur.
- Sweep or vacuum up debris from sandblasting at the end of each shift.
- At the end of each work shift, remove and contain liquid and solid waste from containment structures, if any, and from the general work area.

References

Blueprint for a Clean Bay: Best Management Practices to Prevent Stormwater Pollution from Construction Related Activities; Santa Clara Valley Nonpoint Source Pollution Control Program, 1995.

Stormwater Quality Handbooks - Construction Site Best Management Practices (BMPs) Manual, State of California Department of Transportation (Caltrans), November 2000.

Stormwater Management for Construction Activities, Developing Pollution Prevention Plans and Best Management Practices, EPA 832-R-92005; USEPA, April 1992.

Temporary Batch Plants NS-16

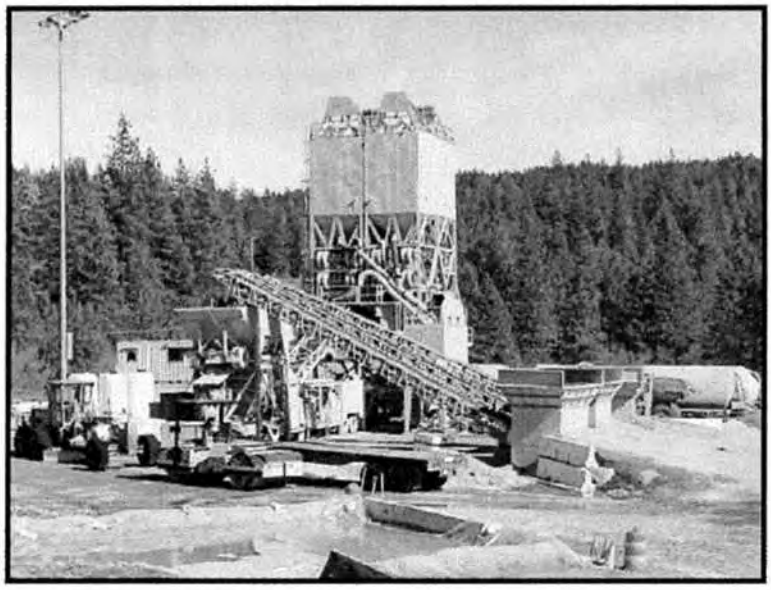

Objectives

EC	Erosion Control	
SE	Sediment Control	
TR	Tracking Control	
WE	Wind Erosion Control	
NS	Non-Stormwater Management Control	☑
WM	Waste Management and Materials Pollution Control	

Legend:

☑ Primary Objective

☒ Secondary Objective

Targeted Constituents

Sediment	☑
Nutrients	
Trash	☑
Metals	☑
Bacteria	
Oil and Grease	
Organics	

Potential Alternatives

None

Description and Purpose

The construction of roads, bridges, retaining walls, and other large structures in remote areas, often requires temporary batch plant facilities to manufacture Portland Cement Concrete (PCC) or asphalt cement (AC). Temporary batch plant facilities typically consist of silos containing fly ash, lime, and cement; heated tanks of liquid asphalt; sand and gravel material storage areas; mixing equipment; above ground storage tanks containing concrete additives and water; and designated areas for sand and gravel truck unloading, concrete truck loading, and concrete truck washout. Proper control and use of equipment, materials, and waste products from temporary batch plant facilities will reduce the discharge of potential pollutants to the storm drain system or watercourses, reduce air emissions, and mitigate noise impacts.

Suitable Applications

These procedures typically apply to construction sites where temporary batch plant facilities are used.

Limitations

The General Permit for discharges of stormwater associated with industrial activities may be applicable to temporary batch plants.

Specific permit requirements or mitigation measures such as Air Resources Board (ARB), Air Quality Management District (AQMD), Air Pollution Control District (APCD), Regional Water Quality Control Board (RWQCB), county ordinances and city

ordinances may require alternative mitigation measures for temporary batch plants.

Implementation

Planning

Implementation steps are as follows:

- Temporary batch plants may be subject to the General Industrial NPDES permit. To comply with the permit, a Notice of Intent (NOI) must be submitted to the State Water Resource Control Board.
- Proper planning, design, and construction of temporary batch plants should be implemented to minimize potential water quality, air pollution, and noise impacts associated with temporary batch plants.
- BMPs and a Sampling and Analysis Plan (SAP) must be included in the project Stormwater Pollution Prevention Plan (SWPPP). BMPs must be implemented, inspected, and maintained.
- Temporary batch plants should be managed to comply with AQMD Statewide Registration Program and/or local AQMD Portable Equipment Registration requirements.
- Construct temporary batch plants down-wind of existing developments whenever possible.
- Placement of access roads should be planned to mitigate water and air quality impacts.

Layout and Design

- Temporary batch plants should be properly located and designed to mitigate water quality impacts to receiving water bodies. Batch plants should be located away from watercourses, drainage courses, and drain inlets. Batch plants should be located to minimize the potential for stormwater runon onto the site.
- Temporary batch plant facilities (including associated stationary equipment and stockpiles) should be located at least 300 ft from any recreational area, school, residence, or other structure not associated with the construction project.
- Construct continuous interior AC or PCC berms around batch plant equipment (mixing equipment, silos, concrete drop points, conveyor belts, admixture tanks, etc.) to facilitate proper containment and cleanup of releases. Rollover or flip top curb or dikes should be placed at ingress and egress points.
- Direct runoff from the paved or unpaved portion of the batch plant into a sump and pipe to a lined washout area or dewatering tank.
- Direct stormwater and non-stormwater runoff from unpaved portions of batch plant facility to catchment ponds or tanks.
- Construct and remove concrete washout facilities in accordance with WM-8, Concrete Waste Management.

- Layout of a typical batch plant and associated BMP is located at the end of this BMP fact sheet.

Operational Procedures

- Washout of concrete trucks should be conducted in a designated area in accordance with WM-8, Concrete Waste Management.
- Do not dispose of concrete into drain inlets, the stormwater drainage system, or watercourses.
- Equipment washing should occur in a designated area in accordance with WM-8, Concrete Waste Management. Washing equipment, tools, or vehicles to remove PCC shall be conducted in accordance with NS-7, Potable Water/Irrigation, and NS-8, Vehicle and Equipment Cleaning.
- All dry material transfer points should be ducted through a fabric or cartridge type filter unless there are no visible emissions from the transfer point.
- Equip all bulk storage silos, including auxiliary bulk storage trailers, with fabric or cartridge type filter(s).
- Maintain silo vent filters in proper operating condition.
- Equip silos and auxiliary bulk storage trailers with dust-tight service hatches.
- Fabric dust collection system should be capable of controlling 99 percent of the particulate matter.
- Fabric dust collectors (except for vent filters) should be equipped with an operational pressure differential gauge to measure the pressure drop across the filters.
- All transfer points should be equipped with a wet suppression system to control fugitive particulate emissions unless there are no visible emissions.
- All conveyors should be covered, unless the material being transferred results in no visible emissions.
- There should be no visible emissions beyond the property line, while the equipment is being operated.
- Collect dust emissions from the loading of open-bodied trucks at the drip point of dry batch plants, or dust emissions from the drum feed for central mix plants.
- Equip silos and auxiliary bulk storage trailers with a visible and/or audible warning mechanism to warn operators that the silo or trailer is full.
- All open-bodied vehicles transporting material should be loaded with a final layer of wet sand and the truck shall be covered with a tarp to reduce emissions.

NS-16 Temporary Batch Plants

Tracking Control

- Plant roads (batch truck and material delivery truck roads) and areas between stockpiles and conveyor hoppers should be stabilized (TR-2, Stabilized Construction Roadway), watered (WE-1, Wind Erosion Control), treated with dust-suppressant chemicals, or paved with a cohesive hard surface that can be repeatedly swept, maintained intact, and cleaned as necessary to control dust emissions.

- Trucks should not track PCC from plants onto public roads. Use appropriate practices from TR-1, Stabilized Construction Entrance/Exit to prevent tracking.

Materials Storage

- WM-1, Material Delivery and Storage, should be implemented at all batch plants using concrete components or compounds. An effective strategy is to cover and contain materials.

- WM-2, Material Use should be conducted in a way to minimize or eliminate the discharge of materials to storm drain system or watercourse.

- Ensure that finer materials are not dispersed into the air during operations, such as unloading of cement delivery trucks.

- Stockpiles should be covered and enclosed with perimeter sediment barriers per WM-3, Stockpile Management. Uncovered stockpiles should be sprinkled with water and/or dust-suppressant chemicals as necessary to control dust emissions, unless the stockpiled material results in no visible emissions. An operable stockpile watering system should be onsite at all times.

- Store bagged and boxed materials on pallets and cover on non-working days prior to rain.

- Minimize stockpiles of demolished PCC by recycling them in a timely manner.

- Provide secondary containment for liquid materials (WM-1). Containment should provide sufficient volume to contain precipitation from a 25-year storm plus 10% of the aggregate volume of all containers or plus 100% of the largest container, whichever is greater.

- Handle solid and liquid waste in accordance with WM-5, Solid Waste Management, WM-10, Liquid Waste Management, and WM-8, Concrete Waste Management.

- Maintain adequate supplies of spill cleanup materials and train staff to respond to spills per WM-4, Spill Prevention and Control.

- Immediately clean up spilled cement and fly ash and contain or dampen so that dust or emissions from wind erosion or vehicle traffic are minimized.

Equipment Maintenance

- Equipment should be maintained to prevent fluid leaks and spills per NS-9, Vehicle and Equipment Fueling, and NS-10, Vehicle and Equipment Maintenance.

- Maintain adequate supplies of spill cleanup materials and train staff to respond to spills per WM-4, Spill Prevention and Control.

- Incorporate other BMPs such as WM-5, Solid Waste Management, WM-6, Hazardous Waste Management, and WM-10, Liquid Waste Management.

Costs

Costs will vary depending on the size of the facility and combination of BMPs implemented.

Inspection and Maintenance

- Inspect and verify that activity–based BMPs are in place prior to the commencement of associated activities. While activities associated with the BMP are under way, inspect weekly during the rainy season and of two-week intervals in the non-rainy season to verify continued BMP implementation.
- Inspect BMPs subject to non-stormwater discharge daily while non-stormwater discharges occur.
- Inspect and repair equipment (for damaged hoses, fittings, and gaskets).
- Inspect and maintain Stabilized Construction Entrance/Exit (TR-1) as needed.
- Inspect and maintain stabilized haul roads as needed.
- Inspect and maintain materials and waste storage areas as needed.

References

Stormwater Quality Handbooks - Construction Site Best Management Practices (BMPs) Manual, State of California Department of Transportation (Caltrans), November 2000.

Stormwater Management for Construction Activities, Developing Pollution Prevention Plans and Best Management Practices, EPA 832-R-92005; USEPA, April 1992.

NS-16 Temporary Batch Plants

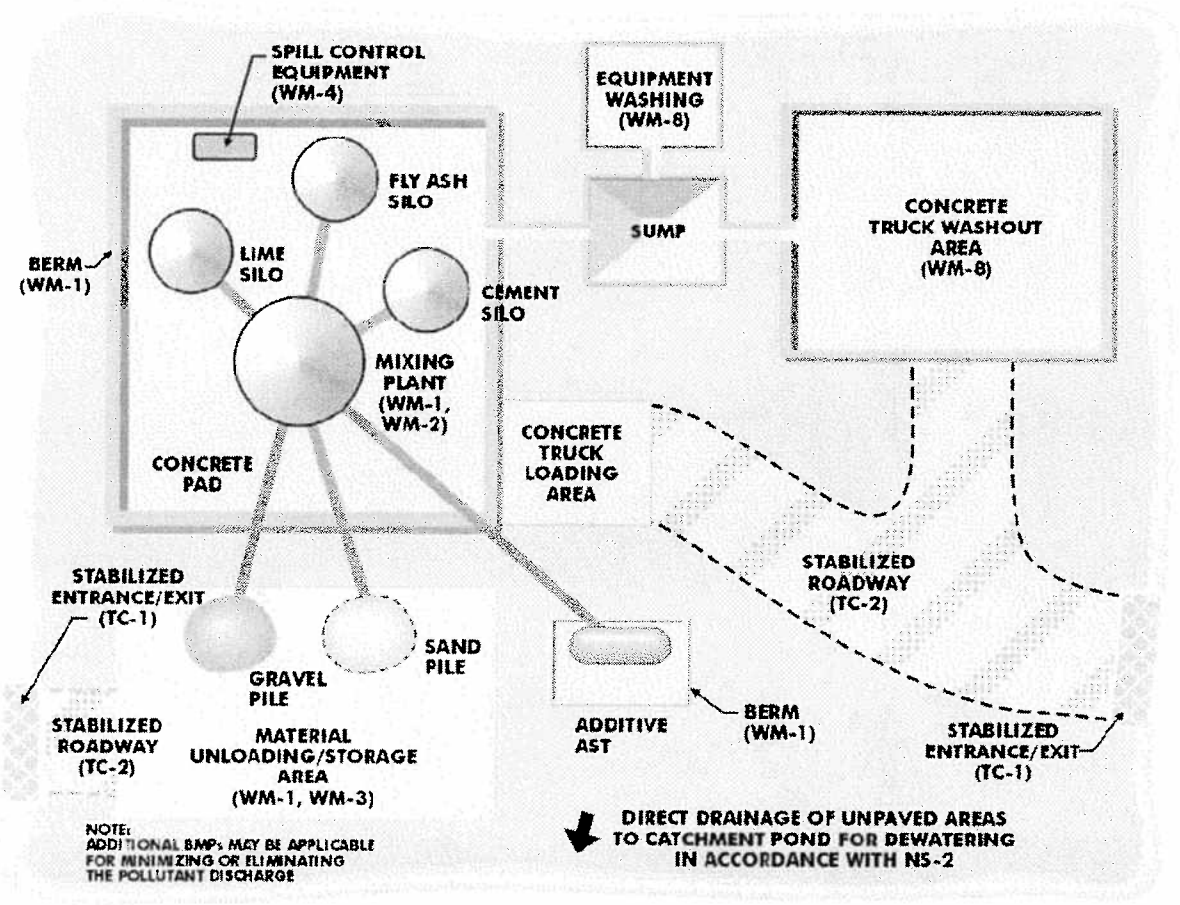

Typical Temporary Batch

Material Delivery and Storage WM-1

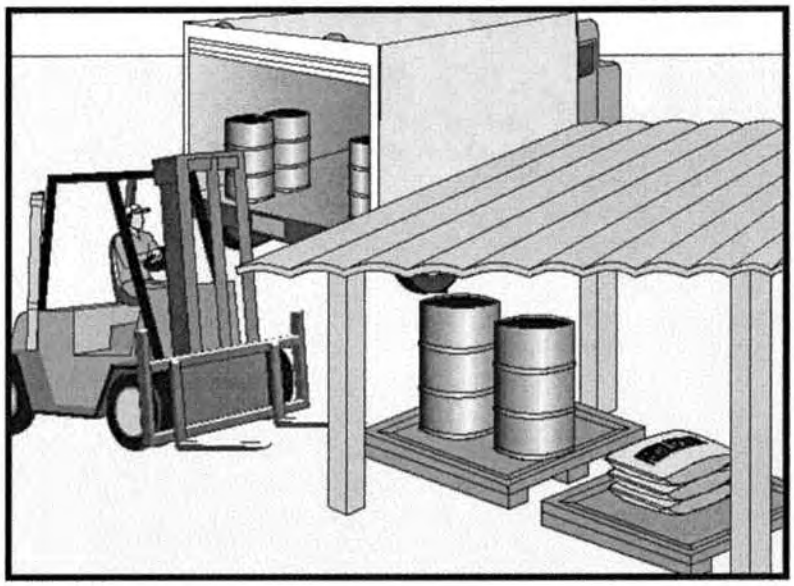

Objectives

EC	Erosion Control	
SE	Sediment Control	
TC	Tracking Control	
WE	Wind Erosion Control	
NS	Non-Stormwater Management Control	
WM	Waste Management and Materials Pollution Control	☑

Legend:

☑ Primary Objective

☒ Secondary Objective

Targeted Constituents

Sediment	☑
Nutrients	☑
Trash	☑
Metals	☑
Bacteria	
Oil and Grease	☑
Organics	☑

Potential Alternatives

None

Description and Purpose

Prevent, reduce, or eliminate the discharge of pollutants from material delivery and storage to the stormwater system or watercourses by minimizing the storage of hazardous materials onsite, storing materials in a designated area, installing secondary containment, conducting regular inspections, and training employees and subcontractors.

This best management practice covers only material delivery and storage. For other information on materials, see WM-2, Material Use, or WM-4, Spill Prevention and Control. For information on wastes, see the waste management BMPs in this section.

Suitable Applications

These procedures are suitable for use at all construction sites with delivery and storage of the following materials:

- Soil stabilizers and binders
- Pesticides and herbicides
- Fertilizers
- Detergents
- Plaster
- Petroleum products such as fuel, oil, and grease
- Asphalt and concrete components

- Hazardous chemicals such as acids, lime, glues, adhesives, paints, solvents, and curing compounds
- Concrete compounds
- Other materials that may be detrimental if released to the environment

Limitations

- Space limitation may preclude indoor storage.
- Storage sheds often must meet building and fire code requirements.

Implementation

The following steps should be taken to minimize risk:

- Temporary storage area should be located away from vehicular traffic.
- Material Safety Data Sheets (MSDS) should be supplied for all materials stored.
- Construction site areas should be designated for material delivery and storage.
- Material delivery and storage areas should be located near the construction entrances, away from waterways, if possible.
  - Avoid transport near drainage paths or waterways.
  - Surround with earth berms. See EC-9, Earth Dikes and Drainage Swales.
  - Place in an area which will be paved.
- Storage of reactive, ignitable, or flammable liquids must comply with the fire codes of your area. Contact the local Fire Marshal to review site materials, quantities, and proposed storage area to determine specific requirements. See the Flammable and Combustible Liquid Code, NFPA30.
- An up to date inventory of materials delivered and stored onsite should be kept.
- Hazardous materials storage onsite should be minimized.
- Hazardous materials should be handled as infrequently as possible.
- During the rainy season, consider storing materials in a covered area. Store materials in secondary containments such as earthen dike, horse trough, or even a children's wading pool for non-reactive materials such as detergents, oil, grease, and paints. Small amounts of material may be secondarily contained in "bus boy" trays or concrete mixing trays.
- Do not store chemicals, drums, or bagged materials directly on the ground. Place these items on a pallet and, when possible, in secondary containment.

- If drums must be kept uncovered, store them at a slight angle to reduce ponding of rainwater on the lids to reduce corrosion. Domed plastic covers are inexpensive and snap to the top of drums, preventing water from collecting.
- Chemicals should be kept in their original labeled containers.
- Employees and subcontractors should be trained on the proper material delivery and storage practices.
- Employees trained in emergency spill cleanup procedures must be present when dangerous materials or liquid chemicals are unloaded.
- If significant residual materials remain on the ground after construction is complete, properly remove materials and any contaminated soil. See WM-7, Contaminated Soil Management. If the area is to be paved, pave as soon as materials are removed to stabilize the soil.

Material Storage Areas and Practices

- Liquids, petroleum products, and substances listed in 40 CFR Parts 110, 117, or 302 should be stored in approved containers and drums and should not be overfilled. Containers and drums should be placed in temporary containment facilities for storage.
- A temporary containment facility should provide for a spill containment volume able to contain precipitation from a 25 year storm event, plus the greater of 10% of the aggregate volume of all containers or 100% of the capacity of the largest container within its boundary, whichever is greater.
- A temporary containment facility should be impervious to the materials stored therein for a minimum contact time of 72 hours.
- A temporary containment facility should be maintained free of accumulated rainwater and spills. In the event of spills or leaks, accumulated rainwater and spills should be collected and placed into drums. These liquids should be handled as a hazardous waste unless testing determines them to be non-hazardous. All collected liquids or non-hazardous liquids should be sent to an approved disposal site.
- Sufficient separation should be provided between stored containers to allow for spill cleanup and emergency response access.
- Incompatible materials, such as chlorine and ammonia, should not be stored in the same temporary containment facility.
- Throughout the rainy season, each temporary containment facility should be covered during non-working days, prior to, and during rain events.
- Materials should be stored in their original containers and the original product labels should be maintained in place in a legible condition. Damaged or otherwise illegible labels should be replaced immediately.

- Bagged and boxed materials should be stored on pallets and should not be allowed to accumulate on the ground. To provide protection from wind and rain throughout the rainy season, bagged and boxed materials should be covered during non-working days and prior to and during rain events.
- Stockpiles should be protected in accordance with WM-3, Stockpile Management.
- Materials should be stored indoors within existing structures or sheds when available.
- Proper storage instructions should be posted at all times in an open and conspicuous location.
- An ample supply of appropriate spill clean up material should be kept near storage areas.
- Also see WM-6, Hazardous Waste Management, for storing of hazardous materials.

Material Delivery Practices

- Keep an accurate, up-to-date inventory of material delivered and stored onsite.
- Arrange for employees trained in emergency spill cleanup procedures to be present when dangerous materials or liquid chemicals are unloaded.

Spill Cleanup

- Contain and clean up any spill immediately.
- Properly remove and dispose of any hazardous materials or contaminated soil if significant residual materials remain on the ground after construction is complete. See WM-7, Contaminated Soil Management.
- See WM-4, Spill Prevention and Control, for spills of chemicals and/or hazardous materials.

Cost

- The largest cost of implementation may be in the construction of a materials storage area that is covered and provides secondary containment.

Inspection and Maintenance

- Inspect and verify that activity–based BMPs are in place prior to the commencement of associated activities. While activities associated with the BMP are under way, inspect weekly during the rainy season and of two-week intervals in the non-rainy season to verify continued BMP implementation.
- Keep an ample supply of spill cleanup materials near the storage area.
- Keep storage areas clean, well organized, and equipped with ample cleanup supplies as appropriate for the materials being stored.
- Repair or replace perimeter controls, containment structures, covers, and liners as needed to maintain proper function.

References

Blueprint for a Clean Bay: Best Management Practices to Prevent Stormwater Pollution from Construction Related Activities; Santa Clara Valley Nonpoint Source Pollution Control Program, 1995.

Coastal Nonpoint Pollution Control Program: Program Development and Approval Guidance, Working Group Working Paper; USEPA, April 1992.

Stormwater Quality Handbooks - Construction Site Best Management Practices (BMPs) Manual, State of California Department of Transportation (Caltrans), November 2000.

Stormwater Management for Construction Activities; Developing Pollution Prevention Plans and Best Management Practice, EPA 832-R-92005; USEPA, April 1992.

Material Use

WM-2

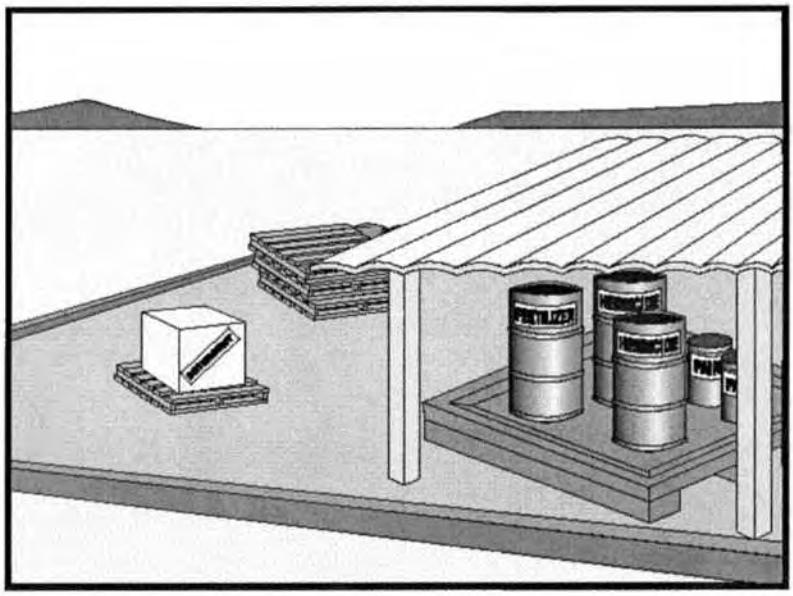

Objectives

EC	Erosion Control	
SE	Sediment Control	
TC	Tracking Control	
WE	Wind Erosion Control	
NS	Non-Stormwater Management Control	
WM	Waste Management and Materials Pollution Control	☑

Legend:

☑ Primary Objective

☒ Secondary Objective

Targeted Constituents

Sediment	☑
Nutrients	☑
Trash	☑
Metals	☑
Bacteria	
Oil and Grease	☑
Organics	☑

Potential Alternatives

None

Description and Purpose

Prevent or reduce the discharge of pollutants to the storm drain system or watercourses from material use by using alternative products, minimizing hazardous material use onsite, and training employees and subcontractors.

Suitable Applications

This BMP is suitable for use at all construction projects. These procedures apply when the following materials are used or prepared onsite:

- Pesticides and herbicides
- Fertilizers
- Detergents
- Plaster
- Petroleum products such as fuel, oil, and grease
- Asphalt and other concrete components
- Other hazardous chemicals such as acids, lime, glues, adhesives, paints, solvents, and curing compounds
- Concrete compounds
- Other materials that may be detrimental if released to the environment

Limitations

Safer alternative building and construction products may not be available or suitable in every instance.

Implementation

The following steps should be taken to minimize risk:

- Minimize use of hazardous materials onsite.
- Follow manufacturer instructions regarding uses, protective equipment, ventilation, flammability, and mixing of chemicals.
- Train personnel who use pesticides. The California Department of Pesticide Regulation and county agricultural commissioners license pesticide dealers, certify pesticide applicators, and conduct onsite inspections.
- Do not over-apply fertilizers, herbicides, and pesticides. Prepare only the amount needed. Follow the recommended usage instructions. Over-application is expensive and environmentally harmful. Unless on steep slopes, till fertilizers into the soil rather than hydro seeding. Apply surface dressings in several smaller applications, as opposed to one large application, to allow time for infiltration and to avoid excess material being carried offsite by runoff. Do not apply these chemicals just before it rains.
- Train employees and subcontractors in proper material use.
- Supply Material Safety Data Sheets (MSDS) for all materials.
- Dispose of latex paint and paint cans, used brushes, rags, absorbent materials, and drop cloths, when thoroughly dry and are no longer hazardous, with other construction debris.
- Do not remove the original product label; it contains important safety and disposal information. Use the entire product before disposing of the container.
- Mix paint indoors or in a containment area. Never clean paintbrushes or rinse paint containers into a street, gutter, storm drain, or watercourse. Dispose of any paint thinners, residue, and sludge(s) that cannot be recycled, as hazardous waste.
- For water-based paint, clean brushes to the extent practicable, and rinse to a drain leading to a sanitary sewer where permitted, or into a concrete washout pit or temporary sediment trap. For oil-based paints, clean brushes to the extent practicable, and filter and reuse thinners and solvents.
- Use recycled and less hazardous products when practical. Recycle residual paints, solvents, non-treated lumber, and other materials.
- Use materials only where and when needed to complete the construction activity. Use safer alternative materials as much as possible. Reduce or eliminate use of hazardous materials onsite when practical.

- Require contractors to complete the "Report of Chemical Spray Forms" when spraying herbicides and pesticides.
- Keep an ample supply of spill clean up material near use areas. Train employees in spill clean up procedures.
- Avoid exposing applied materials to rainfall and runoff unless sufficient time has been allowed for them to dry.

Costs

All of the above are low cost measures.

Inspection and Maintenance

- Inspect and verify that activity–based BMPs are in place prior to the commencement of associated activities. While activities associated with the BMP are under way, inspect weekly during the rainy season and at two–week intervals in the non-rainy season to verify continued BMP implementation.
- Maintenance of this best management practice is minimal.
- Spot check employees and subcontractors throughout the job to ensure appropriate practices are being employed.

References

Blueprint for a Clean Bay: Best Management Practices to Prevent Stormwater Pollution from Construction Related Activities; Santa Clara Valley Nonpoint Source Pollution Control Program, 1995.

Coastal Nonpoint Pollution Control Program: Program Development and Approval Guidance, Working Group Working Paper; USEPA, April 1992.

Stormwater Quality Handbooks - Construction Site Best Management Practices (BMPs) Manual, State of California Department of Transportation (Caltrans), November 2000.

Stormwater Management for Construction Activities; Developing Pollution Prevention Plans and Best Management Practice, EPA 832-R-92005; USEPA, April 1992.

Stockpile Management WM-3

Objectives		
EC	Erosion Control	
SE	Sediment Control	
TC	Tracking Control	
WE	Wind Erosion Control	
NS	Non-Stormwater Management Control	
WM	Waste Management and Materials Pollution Control	☑

Legend:
☑ Primary Objective
☒ Secondary Objective

Targeted Constituents	
Sediment	☑
Nutrients	☑
Trash	☑
Metals	☑
Bacteria	
Oil and Grease	☑
Organics	☑

Potential Alternatives

None

Description and Purpose

Stockpile Management procedures and practices are designed to reduce or eliminate air and stormwater pollution from stockpiles of soil, paving materials such as portland cement concrete (PCC) rubble, asphalt concrete (AC), asphalt concrete rubble, aggregate base, aggregate sub base or pre-mixed aggregate, asphalt minder (so called "cold mix" asphalt), and pressure treated wood.

Suitable Applications

Implement in all projects that stockpile soil and other materials.

Limitations

None identified.

Implementation

Protection of stockpiles is a year-round requirement. To properly manage stockpiles:

- Locate stockpiles a minimum of 50 ft away from concentrated flows of stormwater, drainage courses, and inlets.
- Protect all stockpiles from stormwater runon using a temporary perimeter sediment barrier such as berms, dikes, fiber rolls, silt fences, sandbag, gravel bags, or straw bale barriers.

- Implement wind erosion control practices as appropriate on all stockpiled material. For specific information, see WE-1, Wind Erosion Control.
- Manage stockpiles of contaminated soil in accordance with WM-7, Contaminated Soil Management.
- Place bagged materials on pallets and under cover.

Protection of Non-Active Stockpiles

Non-active stockpiles of the identified materials should be protected further as follows:

Soil stockpiles

- During the rainy season, soil stockpiles should be covered or protected with soil stabilization measures and a temporary perimeter sediment barrier at all times.
- During the non-rainy season, soil stockpiles should be covered or protected with a temporary perimeter sediment barrier prior to the onset of precipitation.

Stockpiles of Portland cement concrete rubble, asphalt concrete, asphalt concrete rubble, aggregate base, or aggregate sub base

- During the rainy season, the stockpiles should be covered or protected with a temporary perimeter sediment barrier at all times.
- During the non-rainy season, the stockpiles should be covered or protected with a temporary perimeter sediment barrier prior to the onset of precipitation.

Stockpiles of "cold mix"

- During the rainy season, cold mix stockpiles should be placed on and covered with plastic or comparable material at all times.
- During the non-rainy season, cold mix stockpiles should be placed on and covered with plastic or comparable material prior to the onset of precipitation.

Stockpiles/Storage of pressure treated wood with copper, chromium, and arsenic or ammonical, copper, zinc, and arsenate

- During the rainy season, treated wood should be covered with plastic or comparable material at all times.
- During the non-rainy season, treated wood should be covered with plastic or comparable material at all times and cold mix stockpiles should be placed on and covered with plastic or comparable material prior to the onset of precipitation.

Protection of Active Stockpiles

Active stockpiles of the identified materials should be protected further as follows:

- All stockpiles should be protected with a temporary linear sediment barrier prior to the onset of precipitation.
- Stockpiles of "cold mix" should be placed on and covered with plastic or comparable material prior to the onset of precipitation.

Costs

All of the above are low cost measures.

Inspection and Maintenance

- Inspect and verify that activity–based BMPs are in place prior to the commencement of associated activities. While activities associated with the BMP are under way, inspect weekly during the rainy season and of two-week intervals in the non-rainy season to verify continued BMP implementation

- Repair and/or replace perimeter controls and covers as needed to keep them functioning properly.

References

Stormwater Quality Handbooks - Construction Site Best Management Practices (BMPs) Manual, State of California Department of Transportation (Caltrans), November 2000.

Spill Prevention and Control WM-4

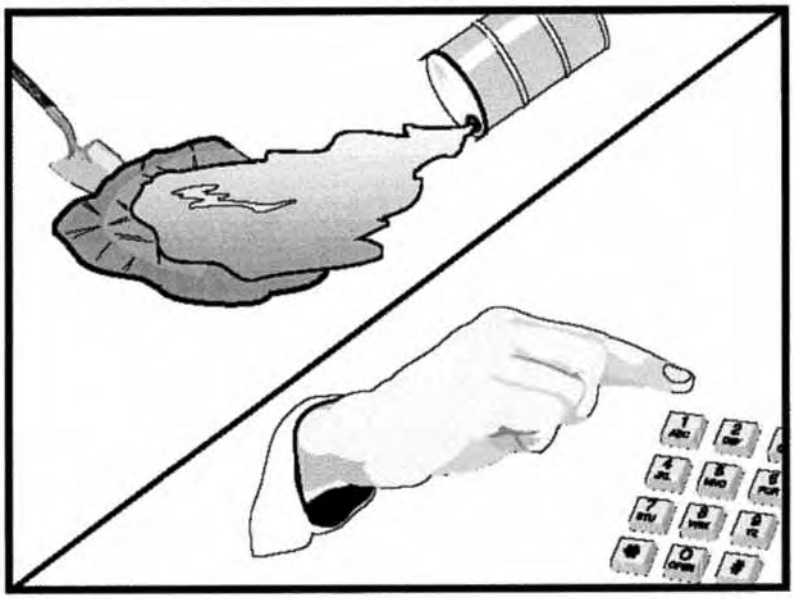

Objectives

EC	Erosion Control	
SE	Sediment Control	
TC	Tracking Control	
WE	Wind Erosion Control	
NS	Non-Stormwater Management Control	
WM	Waste Management and Materials Pollution Control	☑

Legend:

☑ Primary Objective

☒ Secondary Objective

Targeted Constituents

Sediment	☑
Nutrients	☑
Trash	☑
Metals	☑
Bacteria	
Oil and Grease	☑
Organics	☑

Potential Alternatives

None

Description and Purpose

Prevent or reduce the discharge of pollutants to drainage systems or watercourses from leaks and spills by reducing the chance for spills, stopping the source of spills, containing and cleaning up spills, properly disposing of spill materials, and training employees.

This best management practice covers only spill prevention and control. However, WM-1, Materials Delivery and Storage, and WM-2, Material Use, also contain useful information, particularly on spill prevention. For information on wastes, see the waste management BMPs in this section.

Suitable Applications

This BMP is suitable for all construction projects. Spill control procedures are implemented anytime chemicals or hazardous substances are stored on the construction site, including the following materials:

- Soil stabilizers/binders
- Dust palliatives
- Herbicides
- Growth inhibitors
- Fertilizers
- Deicing/anti-icing chemicals

- Fuels
- Lubricants
- Other petroleum distillates

Limitations

- In some cases it may be necessary to use a private spill cleanup company.
- This BMP applies to spills caused by the contractor and subcontractors.
- Procedures and practices presented in this BMP are general. Contractor should identify appropriate practices for the specific materials used or stored onsite

Implementation

The following steps will help reduce the stormwater impacts of leaks and spills:

Education

- Be aware that different materials pollute in different amounts. Make sure that each employee knows what a "significant spill" is for each material they use, and what is the appropriate response for "significant" and "insignificant" spills.
- Educate employees and subcontractors on potential dangers to humans and the environment from spills and leaks.
- Hold regular meetings to discuss and reinforce appropriate disposal procedures (incorporate into regular safety meetings).
- Establish a continuing education program to indoctrinate new employees.
- Have contractor's superintendent or representative oversee and enforce proper spill prevention and control measures.

General Measures

- To the extent that the work can be accomplished safely, spills of oil, petroleum products, substances listed under 40 CFR parts 110,117, and 302, and sanitary and septic wastes should be contained and cleaned up immediately.
- Store hazardous materials and wastes in covered containers and protect from vandalism.
- Place a stockpile of spill cleanup materials where it will be readily accessible.
- Train employees in spill prevention and cleanup.
- Designate responsible individuals to oversee and enforce control measures.
- Spills should be covered and protected from stormwater runon during rainfall to the extent that it doesn't compromise clean up activities.
- Do not bury or wash spills with water.

- Store and dispose of used clean up materials, contaminated materials, and recovered spill material that is no longer suitable for the intended purpose in conformance with the provisions in applicable BMPs.
- Do not allow water used for cleaning and decontamination to enter storm drains or watercourses. Collect and dispose of contaminated water in accordance with WM-10, Liquid Waste Management.
- Contain water overflow or minor water spillage and do not allow it to discharge into drainage facilities or watercourses.
- Place proper storage, cleanup, and spill reporting instructions for hazardous materials stored or used on the project site in an open, conspicuous, and accessible location.
- Keep waste storage areas clean, well organized, and equipped with ample cleanup supplies as appropriate for the materials being stored. Perimeter controls, containment structures, covers, and liners should be repaired or replaced as needed to maintain proper function.

Cleanup

- Clean up leaks and spills immediately.
- Use a rag for small spills on paved surfaces, a damp mop for general cleanup, and absorbent material for larger spills. If the spilled material is hazardous, then the used cleanup materials are also hazardous and must be sent to either a certified laundry (rags) or disposed of as hazardous waste.
- Never hose down or bury dry material spills. Clean up as much of the material as possible and dispose of properly. See the waste management BMPs in this section for specific information.

Minor Spills

- Minor spills typically involve small quantities of oil, gasoline, paint, etc. which can be controlled by the first responder at the discovery of the spill.
- Use absorbent materials on small spills rather than hosing down or burying the spill.
- Absorbent materials should be promptly removed and disposed of properly.
- Follow the practice below for a minor spill:
  - Contain the spread of the spill.
  - Recover spilled materials.
  - Clean the contaminated area and properly dispose of contaminated materials.

Semi-Significant Spills

- Semi-significant spills still can be controlled by the first responder along with the aid of other personnel such as laborers and the foreman, etc. This response may require the cessation of all other activities.

- Spills should be cleaned up immediately:
  - Contain spread of the spill.
  - Notify the project foreman immediately.
  - If the spill occurs on paved or impermeable surfaces, clean up using "dry" methods (absorbent materials, cat litter and/or rags). Contain the spill by encircling with absorbent materials and do not let the spill spread widely.
  - If the spill occurs in dirt areas, immediately contain the spill by constructing an earthen dike. Dig up and properly dispose of contaminated soil.
  - If the spill occurs during rain, cover spill with tarps or other material to prevent contaminating runoff.

Significant/Hazardous Spills

- For significant or hazardous spills that cannot be controlled by personnel in the immediate vicinity, the following steps should be taken:
  - Notify the local emergency response by dialing 911. In addition to 911, the contractor will notify the proper county officials. It is the contractor's responsibility to have all emergency phone numbers at the construction site.
  - Notify the Governor's Office of Emergency Services Warning Center, (916) 845-8911.
  - For spills of federal reportable quantities, in conformance with the requirements in 40 CFR parts 110,119, and 302, the contractor should notify the National Response Center at (800) 424-8802.
  - Notification should first be made by telephone and followed up with a written report.
  - The services of a spills contractor or a Haz-Mat team should be obtained immediately. Construction personnel should not attempt to clean up until the appropriate and qualified staffs have arrived at the job site.
  - Other agencies which may need to be consulted include, but are not limited to, the Fire Department, the Public Works Department, the Coast Guard, the Highway Patrol, the City/County Police Department, Department of Toxic Substances, California Division of Oil and Gas, Cal/OSHA, etc.

Reporting

- Report significant spills to local agencies, such as the Fire Department; they can assist in cleanup.
- Federal regulations require that any significant oil spill into a water body or onto an adjoining shoreline be reported to the National Response Center (NRC) at 800-424-8802 (24 hours).

Use the following measures related to specific activities:

Vehicle and Equipment Maintenance

- If maintenance must occur onsite, use a designated area and a secondary containment, located away from drainage courses, to prevent the runon of stormwater and the runoff of spills.
- Regularly inspect onsite vehicles and equipment for leaks and repair immediately
- Check incoming vehicles and equipment (including delivery trucks, and employee and subcontractor vehicles) for leaking oil and fluids. Do not allow leaking vehicles or equipment onsite.
- Always use secondary containment, such as a drain pan or drop cloth, to catch spills or leaks when removing or changing fluids.
- Place drip pans or absorbent materials under paving equipment when not in use.
- Use absorbent materials on small spills rather than hosing down or burying the spill. Remove the absorbent materials promptly and dispose of properly.
- Promptly transfer used fluids to the proper waste or recycling drums. Don't leave full drip pans or other open containers lying around
- Oil filters disposed of in trashcans or dumpsters can leak oil and pollute stormwater. Place the oil filter in a funnel over a waste oil-recycling drum to drain excess oil before disposal. Oil filters can also be recycled. Ask the oil supplier or recycler about recycling oil filters.
- Store cracked batteries in a non-leaking secondary container. Do this with all cracked batteries even if you think all the acid has drained out. If you drop a battery, treat it as if it is cracked. Put it into the containment area until you are sure it is not leaking.

Vehicle and Equipment Fueling

- If fueling must occur onsite, use designate areas, located away from drainage courses, to prevent the runon of stormwater and the runoff of spills.
- Discourage "topping off" of fuel tanks.
- Always use secondary containment, such as a drain pan, when fueling to catch spills/ leaks.

Costs

Prevention of leaks and spills is inexpensive. Treatment and/ or disposal of contaminated soil or water can be quite expensive.

Inspection and Maintenance

- Inspect and verify that activity–based BMPs are in place prior to the commencement of associated activities. While activities associated with the BMP are under way, inspect weekly during the rainy season and of two-week intervals in the non-rainy season to verify continued BMP implementation.
- Inspect BMPs subject to non-stormwater discharge daily while non-stormwater discharges occur.

- Keep ample supplies of spill control and cleanup materials onsite, near storage, unloading, and maintenance areas.
- Update your spill prevention and control plan and stock cleanup materials as changes occur in the types of chemicals onsite.

References

Blueprint for a Clean Bay: Best Management Practices to Prevent Stormwater Pollution from Construction Related Activities; Santa Clara Valley Nonpoint Source Pollution Control Program, 1995.

Stormwater Quality Handbooks - Construction Site Best Management Practices (BMPs) Manual, State of California Department of Transportation (Caltrans), November 2000.

Stormwater Management for Construction Activities; Developing Pollution Prevention Plans and Best Management Practice, EPA 832-R-92005; USEPA, April 1992.

Solid Waste Management WM-5

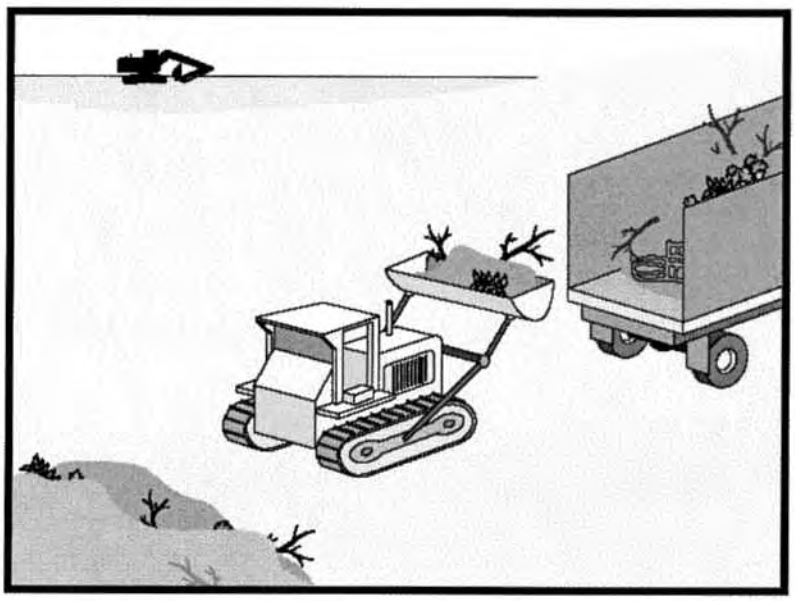

Objectives

EC	Erosion Control	
SE	Sediment Control	
TC	Tracking Control	
WE	Wind Erosion Control	
NS	Non-Stormwater Management Control	
WM	Waste Management and Materials Pollution Control	☑

Legend:

☑ Primary Objective

☒ Secondary Objective

Targeted Constituents

Sediment	☑
Nutrients	☑
Trash	☑
Metals	☑
Bacteria	
Oil and Grease	☑
Organics	☑

Potential Alternatives

None

Description and Purpose

Solid waste management procedures and practices are designed to prevent or reduce the discharge of pollutants to stormwater from solid or construction waste by providing designated waste collection areas and containers, arranging for regular disposal, and training employees and subcontractors.

Suitable Applications

This BMP is suitable for construction sites where the following wastes are generated or stored:

- Solid waste generated from trees and shrubs removed during land clearing, demolition of existing structures (rubble), and building construction
- Packaging materials including wood, paper, and plastic
- Scrap or surplus building materials including scrap metals, rubber, plastic, glass pieces and masonry products
- Domestic wastes including food containers such as beverage cans, coffee cups, paper bags, plastic wrappers, and cigarettes
- Construction wastes including brick, mortar, timber, steel and metal scraps, pipe and electrical cuttings, non-hazardous equipment parts, styrofoam and other materials used to transport and package construction materials

- Highway planting wastes, including vegetative material, plant containers, and packaging materials

Limitations

Temporary stockpiling of certain construction wastes may not necessitate stringent drainage related controls during the non-rainy season or in desert areas with low rainfall.

Implementation

The following steps will help keep a clean site and reduce stormwater pollution:

- Select designated waste collection areas onsite.
- Inform trash-hauling contractors that you will accept only watertight dumpsters for onsite use. Inspect dumpsters for leaks and repair any dumpster that is not watertight.
- Locate containers in a covered area or in a secondary containment.
- Provide an adequate number of containers with lids or covers that can be placed over the container to keep rain out or to prevent loss of wastes when it is windy.
- Plan for additional containers and more frequent pickup during the demolition phase of construction.
- Collect site trash daily, especially during rainy and windy conditions.
- Remove this solid waste promptly since erosion and sediment control devices tend to collect litter.
- Make sure that toxic liquid wastes (used oils, solvents, and paints) and chemicals (acids, pesticides, additives, curing compounds) are not disposed of in dumpsters designated for construction debris.
- Do not hose out dumpsters on the construction site. Leave dumpster cleaning to the trash hauling contractor.
- Arrange for regular waste collection before containers overflow.
- Clean up immediately if a container does spill.
- Make sure that construction waste is collected, removed, and disposed of only at authorized disposal areas.

Education

- Have the contractor's superintendent or representative oversee and enforce proper solid waste management procedures and practices.
- Instruct employees and subcontractors on identification of solid waste and hazardous waste.
- Educate employees and subcontractors on solid waste storage and disposal procedures.

- Hold regular meetings to discuss and reinforce disposal procedures (incorporate into regular safety meetings).
- Require that employees and subcontractors follow solid waste handling and storage procedures.
- Prohibit littering by employees, subcontractors, and visitors.
- Minimize production of solid waste materials wherever possible.

Collection, Storage, and Disposal

- Littering on the project site should be prohibited.
- To prevent clogging of the storm drainage system, litter and debris removal from drainage grates, trash racks, and ditch lines should be a priority.
- Trash receptacles should be provided in the contractor's yard, field trailer areas, and at locations where workers congregate for lunch and break periods.
- Litter from work areas within the construction limits of the project site should be collected and placed in watertight dumpsters at least weekly, regardless of whether the litter was generated by the contractor, the public, or others. Collected litter and debris should not be placed in or next to drain inlets, stormwater drainage systems, or watercourses.
- Dumpsters of sufficient size and number should be provided to contain the solid waste generated by the project.
- Full dumpsters should be removed from the project site and the contents should be disposed of by the trash hauling contractor.
- Construction debris and waste should be removed from the site biweekly or more frequently as needed.
- Construction material visible to the public should be stored or stacked in an orderly manner.
- Stormwater runon should be prevented from contacting stored solid waste through the use of berms, dikes, or other temporary diversion structures or through the use of measures to elevate waste from site surfaces.
- Solid waste storage areas should be located at least 50 ft from drainage facilities and watercourses and should not be located in areas prone to flooding or ponding.
- Except during fair weather, construction and highway planting waste not stored in watertight dumpsters should be securely covered from wind and rain by covering the waste with tarps or plastic.
- Segregate potentially hazardous waste from non-hazardous construction site waste.
- Make sure that toxic liquid wastes (used oils, solvents, and paints) and chemicals (acids, pesticides, additives, curing compounds) are not disposed of in dumpsters designated for construction debris.

- For disposal of hazardous waste, see WM-6, Hazardous Waste Management. Have hazardous waste hauled to an appropriate disposal and/or recycling facility.
- Salvage or recycle useful vegetation debris, packaging and surplus building materials when practical. For example, trees and shrubs from land clearing can be used as a brush barrier, or converted into wood chips, then used as mulch on graded areas. Wood pallets, cardboard boxes, and construction scraps can also be recycled.

Costs

All of the above are low cost measures.

Inspection and Maintenance

- Inspect and verify that activity–based BMPs are in place prior to the commencement of associated activities. While activities associated with the BMP are under way, inspect weekly during the rainy season and of two-week intervals in the non-rainy season to verify continued BMP implementation.
- Inspect BMPs subject to non-stormwater discharge daily while non-stormwater discharges occur
- Inspect construction waste area regularly.
- Arrange for regular waste collection.

References

Processes, Procedures and Methods to Control Pollution Resulting from All Construction Activity, 430/9-73-007, USEPA, 1973.

Stormwater Quality Handbooks - Construction Site Best Management Practices (BMPs) Manual, State of California Department of Transportation (Caltrans), November 2000.

Stormwater Management for Construction Activities; Developing Pollution Prevention Plans and Best Management Practice, EPA 832-R-92005; USEPA, April 1992.

Hazardous Waste Management WM-6

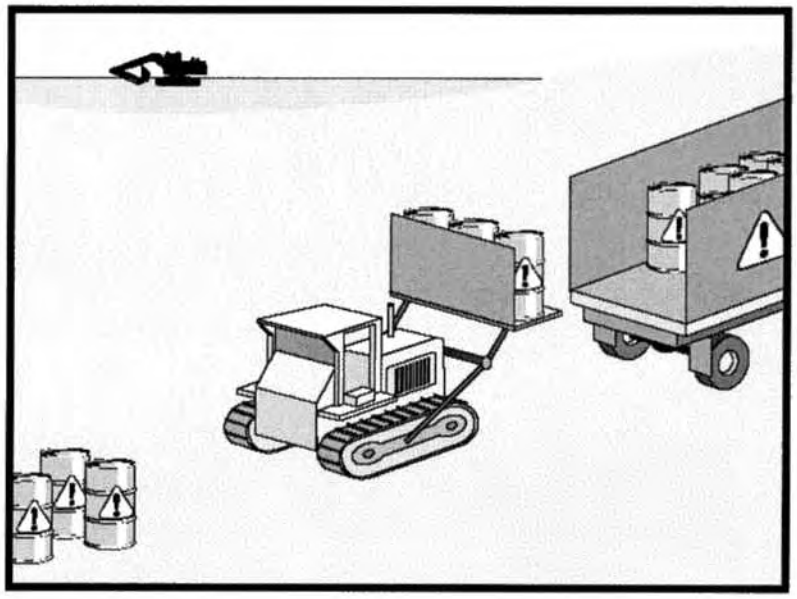

Objectives		
EC	Erosion Control	
SE	Sediment Control	
TC	Tracking Control	
WE	Wind Erosion Control	
NS	Non-Stormwater Management Control	
WM	Waste Management and Materials Pollution Control	☑

Legend:
☑ Primary Objective
☒ Secondary Objective

Targeted Constituents	
Sediment	
Nutrients	☑
Trash	☑
Metals	☑
Bacteria	☑
Oil and Grease	☑
Organics	☑

Potential Alternatives

None

Description and Purpose

Prevent or reduce the discharge of pollutants to stormwater from hazardous waste through proper material use, waste disposal, and training of employees and subcontractors.

Suitable Applications

This best management practice (BMP) applies to all construction projects. Hazardous waste management practices are implemented on construction projects that generate waste from the use of:

- Petroleum Products
- Concrete Curing Compounds
- Palliatives
- Septic Wastes
- Stains
- Wood Preservatives
- Asphalt Products
- Pesticides
- Acids
- Paints
- Solvents
- Roofing Tar
- Any materials deemed a hazardous waste in California, Title 22 Division 4.5, or listed in 40 CFR Parts 110, 117, 261, or 302

In addition, sites with existing structures may contain wastes, which must be disposed of in accordance with federal, state, and local regulations. These wastes include:

- Sandblasting grit mixed with lead-, cadmium-, or chromium-based paints
- Asbestos
- PCBs (particularly in older transformers)

Limitations

- Hazardous waste that cannot be reused or recycled must be disposed of by a licensed hazardous waste hauler.
- Nothing in this BMP relieves the contractor from responsibility for compliance with federal, state, and local laws regarding storage, handling, transportation, and disposal of hazardous wastes.
- This BMP does not cover aerially deposited lead (ADL) soils. For ADL soils refer to WM-7, Contaminated Soil Management.

Implementation

The following steps will help reduce stormwater pollution from hazardous wastes:

Material Use

- Wastes should be stored in sealed containers constructed of a suitable material and should be labeled as required by Title 22 CCR, Division 4.5 and 49 CFR Parts 172, 173, 178, and 179.
- All hazardous waste should be stored, transported, and disposed as required in Title 22 CCR, Division 4.5 and 49 CFR 261-263.
- Waste containers should be stored in temporary containment facilities that should comply with the following requirements:
  - Temporary containment facility should provide for a spill containment volume equal to 1.5 times the volume of all containers able to contain precipitation from a 25 year storm event, plus the greater of 10% of the aggregate volume of all containers or 100% of the capacity of the largest tank within its boundary, whichever is greater.
  - Temporary containment facility should be impervious to the materials stored there for a minimum contact time of 72 hours.
  - Temporary containment facilities should be maintained free of accumulated rainwater and spills. In the event of spills or leaks, accumulated rainwater and spills should be placed into drums after each rainfall. These liquids should be handled as a hazardous waste unless testing determines them to be non-hazardous. Non-hazardous liquids should be sent to an approved disposal site.
  - Sufficient separation should be provided between stored containers to allow for spill cleanup and emergency response access.

- Incompatible materials, such as chlorine and ammonia, should not be stored in the same temporary containment facility.
- Throughout the rainy season, temporary containment facilities should be covered during non-working days, and prior to rain events. Covered facilities may include use of plastic tarps for small facilities or constructed roofs with overhangs.

- Drums should not be overfilled and wastes should not be mixed.
- Unless watertight, containers of dry waste should be stored on pallets.
- Do not over-apply herbicides and pesticides. Prepare only the amount needed. Follow the recommended usage instructions. Over application is expensive and environmentally harmful. Apply surface dressings in several smaller applications, as opposed to one large application. Allow time for infiltration and avoid excess material being carried offsite by runoff. Do not apply these chemicals just before it rains. People applying pesticides must be certified in accordance with federal and state regulations.
- Paint brushes and equipment for water and oil based paints should be cleaned within a contained area and should not be allowed to contaminate site soils, watercourses, or drainage systems. Waste paints, thinners, solvents, residues, and sludges that cannot be recycled or reused should be disposed of as hazardous waste. When thoroughly dry, latex paint and paint cans, used brushes, rags, absorbent materials, and drop cloths should be disposed of as solid waste.
- Do not clean out brushes or rinse paint containers into the dirt, street, gutter, storm drain, or stream. "Paint out" brushes as much as possible. Rinse water-based paints to the sanitary sewer. Filter and reuse thinners and solvents. Dispose of excess oil-based paints and sludge as hazardous waste.
- The following actions should be taken with respect to temporary contaminant:
  - Ensure that adequate hazardous waste storage volume is available.
  - Ensure that hazardous waste collection containers are conveniently located.
  - Designate hazardous waste storage areas onsite away from storm drains or watercourses and away from moving vehicles and equipment to prevent accidental spills.
  - Minimize production or generation of hazardous materials and hazardous waste on the job site.
  - Use containment berms in fueling and maintenance areas and where the potential for spills is high.
  - Segregate potentially hazardous waste from non-hazardous construction site debris.
  - Keep liquid or semi-liquid hazardous waste in appropriate containers (closed drums or similar) and under cover.

- Clearly label all hazardous waste containers with the waste being stored and the date of accumulation.
- Place hazardous waste containers in secondary containment.
- Do not allow potentially hazardous waste materials to accumulate on the ground.
- Do not mix wastes.
- Use all of the product before disposing of the container.
- Do not remove the original product label; it contains important safety and disposal information.

Waste Recycling Disposal

- Select designated hazardous waste collection areas onsite.
- Hazardous materials and wastes should be stored in covered containers and protected from vandalism.
- Place hazardous waste containers in secondary containment.
- Do not mix wastes, this can cause chemical reactions, making recycling impossible and complicating disposal.
- Recycle any useful materials such as used oil or water-based paint.
- Make sure that toxic liquid wastes (used oils, solvents, and paints) and chemicals (acids, pesticides, additives, curing compounds) are not disposed of in dumpsters designated for construction debris.
- Arrange for regular waste collection before containers overflow.
- Make sure that hazardous waste (e.g., excess oil-based paint and sludge) is collected, removed, and disposed of only at authorized disposal areas.

Disposal Procedures

- Waste should be disposed of by a licensed hazardous waste transporter at an authorized and licensed disposal facility or recycling facility utilizing properly completed Uniform Hazardous Waste Manifest forms.
- A Department of Health Services certified laboratory should sample waste to determine the appropriate disposal facility.
- Properly dispose of rainwater in secondary containment that may have mixed with hazardous waste.
- Attention is directed to "Hazardous Material", "Contaminated Material", and "Aerially Deposited Lead" of the contract documents regarding the handling and disposal of hazardous materials.

Education

- Educate employees and subcontractors on hazardous waste storage and disposal procedures.
- Educate employees and subcontractors on potential dangers to humans and the environment from hazardous wastes.
- Instruct employees and subcontractors on safety procedures for common construction site hazardous wastes.
- Instruct employees and subcontractors in identification of hazardous and solid waste.
- Hold regular meetings to discuss and reinforce hazardous waste management procedures (incorporate into regular safety meetings).
- The contractor's superintendent or representative should oversee and enforce proper hazardous waste management procedures and practices.
- Make sure that hazardous waste is collected, removed, and disposed of only at authorized disposal areas.
- Warning signs should be placed in areas recently treated with chemicals.
- Place a stockpile of spill cleanup materials where it will be readily accessible.
- If a container does spill, clean up immediately.

Costs

All of the above are low cost measures.

Inspection and Maintenance

- Inspect and verify that activity–based BMPs are in place prior to the commencement of associated activities. While activities associated with the BMP are under way, inspect weekly during the rainy season and of two week intervals in the non-rainy season to verify continued BMP implementation.
- Inspect BMPs subject to non-stormwater discharge daily while non-stormwater discharges occur
- Hazardous waste should be regularly collected.
- A foreman or construction supervisor should monitor onsite hazardous waste storage and disposal procedures.
- Waste storage areas should be kept clean, well organized, and equipped with ample cleanup supplies as appropriate for the materials being stored.
- Perimeter controls, containment structures, covers, and liners should be repaired or replaced as needed to maintain proper function.
- Hazardous spills should be cleaned up and reported in conformance with the applicable Material Safety Data Sheet (MSDS) and the instructions posted at the project site.

- The National Response Center, at (800) 424-8802, should be notified of spills of federal reportable quantities in conformance with the requirements in 40 CFR parts 110, 117, and 302. Also notify the Governors Office of Emergency Services Warning Center at (916) 845-8911.
- A copy of the hazardous waste manifests should be provided.

References

Blueprint for a Clean Bay: Best Management Practices to Prevent Stormwater Pollution from Construction Related Activities; Santa Clara Valley Nonpoint Source Pollution Control Program, 1995.

Processes, Procedures and Methods to Control Pollution Resulting from All Construction Activity, 430/9-73-007, USEPA, 1973.

Stormwater Quality Handbooks - Construction Site Best Management Practices (BMPs) Manual, State of California Department of Transportation (Caltrans), November 2000.

Stormwater Management for Construction Activities; Developing Pollution Prevention Plans and Best Management Practice, EPA 832-R-92005; USEPA, April 1992.

Contaminated Soil Management WM-7

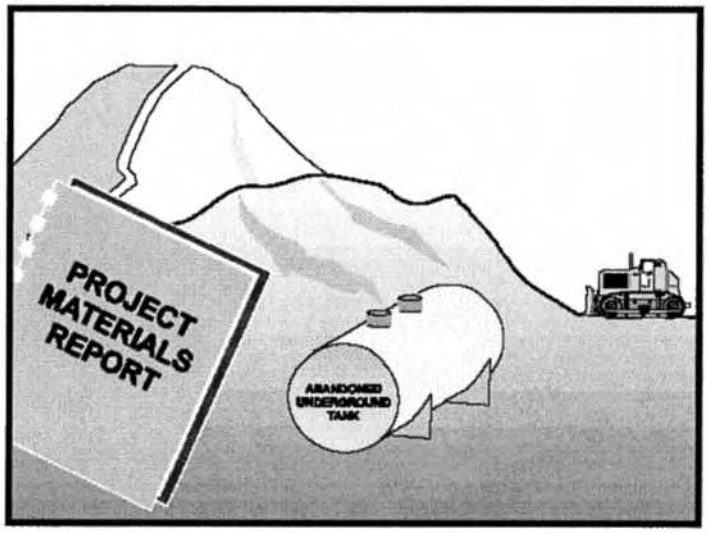

Objectives

EC	Erosion Control	
SE	Sediment Control	
TC	Tracking Control	
WE	Wind Erosion Control	
NS	Non-Stormwater Management Control	
WM	Waste Management and Materials Pollution Control	☑

Legend:
☑ Primary Objective
☒ Secondary Objective

Targeted Constituents

Sediment	
Nutrients	☑
Trash	☑
Metals	☑
Bacteria	☑
Oil and Grease	☑
Organics	☑

Potential Alternatives

None

Description and Purpose

Prevent or reduce the discharge of pollutants to stormwater from contaminated soil and highly acidic or alkaline soils by conducting pre-construction surveys, inspecting excavations regularly, and remediating contaminated soil promptly.

Suitable Applications

Contaminated soil management is implemented on construction projects in highly urbanized or industrial areas where soil contamination may have occurred due to spills, illicit discharges, aerial deposition, past use and leaks from underground storage tanks.

Limitations

Contaminated soils that cannot be treated onsite must be disposed of offsite by a licensed hazardous waste hauler. The presence of contaminated soil may indicate contaminated water as well. See NS-2, Dewatering Operations, for more information.

The procedures and practices presented in this BMP are general. The contractor should identify appropriate practices and procedures for the specific contaminants known to exist or discovered onsite.

Implementation

Most owners and developers conduct pre-construction environmental assessments as a matter of routine. Contaminated soils are often identified during project planning and development with known locations identified in the plans, specifications and in the SWPPP. The contractor should review applicable reports and investigate appropriate call-outs in the plans, specifications, and

SWPPP. Recent court rulings holding contractors liable for cleanup costs when they unknowingly move contaminated soil highlight the need for contractors to confirm a site assessment is completed before earth moving begins.

The following steps will help reduce stormwater pollution from contaminated soil:

- Conduct thorough, pre-construction inspections of the site and review documents related to the site. If inspection or reviews indicated presence of contaminated soils, develop a plan before starting work.
- Look for contaminated soil as evidenced by discoloration, odors, differences in soil properties, abandoned underground tanks or pipes, or buried debris.
- Prevent leaks and spills. Contaminated soil can be expensive to treat and dispose of properly. However, addressing the problem before construction is much less expensive than after the structures are in place.
- The contractor may further identify contaminated soils by investigating:
  - Past site uses and activities
  - Detected or undetected spills and leaks
  - Acid or alkaline solutions from exposed soil or rock formations high in acid or alkaline forming elements
  - Contaminated soil as evidenced by discoloration, odors, differences in soil properties, abandoned underground tanks or pipes, or buried debris.
  - Suspected soils should be tested at a certified laboratory.

Education

- Have employees and subcontractors complete a safety training program which meets 29 CFR 1910.120 and 8 CCR 5192 covering the potential hazards as identified, prior to performing any excavation work at the locations containing material classified as hazardous.
- Educate employees and subcontractors in identification of contaminated soil and on contaminated soil handling and disposal procedures.
- Hold regular meetings to discuss and reinforce disposal procedures (incorporate into regular safety meetings).

Handling Procedures for Material with Aerially Deposited Lead (ADL)

- Materials from areas designated as containing (ADL) may, if allowed by the contract special provisions, be excavated, transported, and used in the construction of embankments and/or backfill.
- Excavation, transportation, and placement operations should result in no visible dust.
- Caution should be exercised to prevent spillage of lead containing material during transport.

- Quality should be monitored during excavation of soils contaminated with lead.

Handling Procedures for Contaminated Soils

- Minimize onsite storage. Contaminated soil should be disposed of properly in accordance with all applicable regulations. All hazardous waste storage will comply with the requirements in Title 22, CCR, Sections 66265.250 to 66265.260.
- Test suspected soils at an approved certified laboratory.
- Work with the local regulatory agencies to develop options for treatment or disposal if the soil is contaminated.
- Avoid temporary stockpiling of contaminated soils or hazardous material.
- Take the following precautions if temporary stockpiling is necessary:
  - Cover the stockpile with plastic sheeting or tarps.
  - Install a berm around the stockpile to prevent runoff from leaving the area.
  - Do not stockpile in or near storm drains or watercourses.
- Remove contaminated material and hazardous material on exteriors of transport vehicles and place either into the current transport vehicle or into the excavation prior to the vehicle leaving the exclusion zone.
- Monitor the air quality continuously during excavation operations at all locations containing hazardous material.
- Procure all permits and licenses, pay all charges and fees, and give all notices necessary and incident to the due and lawful prosecution of the work, including registration for transporting vehicles carrying the contaminated material and the hazardous material.
- Collect water from decontamination procedures and treat or dispose of it at an appropriate disposal site.
- Collect non-reusable protective equipment, once used by any personnel, and dispose of at an appropriate disposal site.
- Install temporary security fence to surround and secure the exclusion zone. Remove fencing when no longer needed.
- Excavate, transport, and dispose of contaminated material and hazardous material in accordance with the rules and regulations of the following agencies (the specifications of these agencies supersede the procedures outlined in this BMP):
  - United States Department of Transportation (USDOT)
  - United States Environmental Protection Agency (USEPA)
  - California Environmental Protection Agency (CAL-EPA)

- California Division of Occupation Safety and Health Administration (CAL-OSHA)
- Local regulatory agencies

Procedures for Underground Storage Tank Removals

- Prior to commencing tank removal operations, obtain the required underground storage tank removal permits and approval from the federal, state, and local agencies that have jurisdiction over such work.
- To determine if it contains hazardous substances, arrange to have tested, any liquid or sludge found in the underground tank prior to its removal.
- Following the tank removal, take soil samples beneath the excavated tank and perform analysis as required by the local agency representative(s).
- The underground storage tank, any liquid or sludge found within the tank, and all contaminated substances and hazardous substances removed during the tank removal and transported to disposal facilities permitted to accept such waste.

Water Control

- All necessary precautions and preventive measures should be taken to prevent the flow of water, including ground water, from mixing with hazardous substances or underground storage tank excavations. Such preventative measures may consist of, but are not limited to, berms, cofferdams, grout curtains, freeze walls, and seal course concrete or any combination thereof.
- If water does enter an excavation and becomes contaminated, such water, when necessary to proceed with the work, should be discharged to clean, closed top, watertight transportable holding tanks, treated, and disposed of in accordance with federal, state, and local laws.

Costs

Prevention of leaks and spills is inexpensive. Treatment or disposal of contaminated soil can be quite expensive.

Inspection and Maintenance

- Inspect and verify that activity–based BMPs are in place prior to the commencement of associated activities. While activities associated with the BMP are under way, inspect weekly during the rainy season and of two-week intervals in the non-rainy season to verify continued BMP implementation.
- Arrange for contractor's Water Pollution Control Manager, foreman, and/or construction supervisor to monitor onsite contaminated soil storage and disposal procedures.
- Monitor air quality continuously during excavation operations at all locations containing hazardous material.
- Coordinate contaminated soils and hazardous substances/waste management with the appropriate federal, state, and local agencies.

- Implement WM-4, Spill Prevention and Control, to prevent leaks and spills as much as possible.

References

Blueprint for a Clean Bay: Best Management Practices to Prevent Stormwater Pollution from Construction Related Activities; Santa Clara Valley Nonpoint Source Pollution Control Program, 1995.

Processes, Procedures and Methods to Control Pollution Resulting from All Construction Activity, 430/9-73-007, USEPA, 1973.

Stormwater Quality Handbooks - Construction Site Best Management Practices (BMPs) Manual, State of California Department of Transportation (Caltrans), November 2000.

Stormwater Management for Construction Activities; Developing Pollution Prevention Plans and Best Management Practice, EPA 832-R-92005; USEPA, April 1992.

Concrete Waste Management WM-8

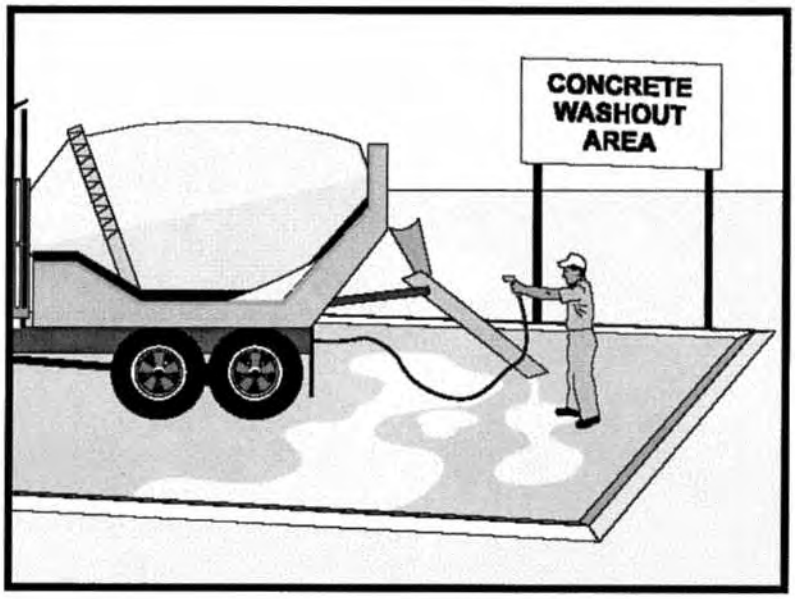

Objectives

EC	Erosion Control	
SE	Sediment Control	
TC	Tracking Control	
WE	Wind Erosion Control	
NS	Non-Stormwater Management Control	
WM	Waste Management and Materials Pollution Control	☑

Legend:
☑ Primary Objective
☒ Secondary Objective

Targeted Constituents

Sediment	☑
Nutrients	
Trash	
Metals	☑
Bacteria	
Oil and Grease	
Organics	

Potential Alternatives

None

Description and Purpose

Prevent or reduce the discharge of pollutants to stormwater from concrete waste by conducting washout offsite, performing onsite washout in a designated area, and training employee and subcontractors.

Suitable Applications

Concrete waste management procedures and practices are implemented on construction projects where:

- Concrete is used as a construction material or where concrete dust and debris result form demolition activities
- Slurries containing portland cement concrete (PCC) or asphalt concrete (AC) are generated, such as from saw cutting, coring, grinding, grooving, and hydro-concrete demolition
- Concrete trucks and other concrete-coated equipment are washed onsite
- Mortar-mixing stations exist
- See also NS-8, Vehicle and Equipment Cleaning

Limitations

- Offsite washout of concrete wastes may not always be possible.

Implementation

The following steps will help reduce stormwater pollution from concrete wastes:

- Discuss the concrete management techniques described in this BMP (such as handling of concrete waste and washout) with the ready-mix concrete supplier before any deliveries are made.
- Incorporate requirements for concrete waste management into material supplier and subcontractor agreements.
- Store dry and wet materials under cover, away from drainage areas.
- Avoid mixing excess amounts of fresh concrete.
- Perform washout of concrete trucks offsite or in designated areas only.
- Do not wash out concrete trucks into storm drains, open ditches, streets, or streams.
- Do not allow excess concrete to be dumped onsite, except in designated areas.
- For onsite washout:
  - Locate washout area at least 50 feet from storm drains, open ditches, or water bodies. Do not allow runoff from this area by constructing a temporary pit or bermed area large enough for liquid and solid waste.
  - Wash out wastes into the temporary pit where the concrete can set, be broken up, and then disposed properly.
- Avoid creating runoff by draining water to a bermed or level area when washing concrete to remove fine particles and expose the aggregate.
- Do not wash sweepings from exposed aggregate concrete into the street or storm drain. Collect and return sweepings to aggregate base stockpile or dispose in the trash.

Education

- Educate employees, subcontractors, and suppliers on the concrete waste management techniques described herein.
- Arrange for contractor's superintendent or representative to oversee and enforce concrete waste management procedures.

Concrete Slurry Wastes

- PCC and AC waste should not be allowed to enter storm drains or watercourses.
- PCC and AC waste should be collected and disposed of or placed in a temporary concrete washout facility.
- A sign should be installed adjacent to each temporary concrete washout facility to inform concrete equipment operators to utilize the proper facilities.

- Below grade concrete washout facilities are typical. Above grade facilities are used if excavation is not practical.
- A foreman or construction supervisor should monitor onsite concrete working tasks, such as saw cutting, coring, grinding and grooving to ensure proper methods are implemented.
- Saw-cut PCC slurry should not be allowed to enter storm drains or watercourses. Residue from grinding operations should be picked up by means of a vacuum attachment to the grinding machine. Saw cutting residue should not be allowed to flow across the pavement and should not be left on the surface of the pavement. See also NS-3, Paving and Grinding Operations; and WM-10, Liquid Waste Management.
- Slurry residue should be vacuumed and disposed in a temporary pit (as described in OnSite Temporary Concrete Washout Facility, Concrete Transit Truck Washout Procedures, below) and allowed to dry. Dispose of dry slurry residue in accordance with WM-5, Solid Waste Management.

Onsite Temporary Concrete Washout Facility, Transit Truck Washout Procedures

- Temporary concrete washout facilities should be located a minimum of 50 ft from storm drain inlets, open drainage facilities, and watercourses. Each facility should be located away from construction traffic or access areas to prevent disturbance or tracking.
- A sign should be installed adjacent to each washout facility to inform concrete equipment operators to utilize the proper facilities.
- Temporary concrete washout facilities should be constructed above grade or below grade at the option of the contractor. Temporary concrete washout facilities should be constructed and maintained in sufficient quantity and size to contain all liquid and concrete waste generated by washout operations.
- Temporary washout facilities should have a temporary pit or bermed areas of sufficient volume to completely contain all liquid and waste concrete materials generated during washout procedures.
- Washout of concrete trucks should be performed in designated areas only.
- Only concrete from mixer truck chutes should be washed into concrete wash out.
- Concrete washout from concrete pumper bins can be washed into concrete pumper trucks and discharged into designated washout area or properly disposed of offsite.
- Once concrete wastes are washed into the designated area and allowed to harden, the concrete should be broken up, removed, and disposed of per WM-5, Solid Waste Management. Dispose of hardened concrete on a regular basis.
- Temporary Concrete Washout Facility (Type Above Grade)
  - Temporary concrete washout facility (type above grade) should be constructed as shown on the details at the end of this BMP, with a recommended minimum length and

minimum width of 10 ft, but with sufficient quantity and volume to contain all liquid and concrete waste generated by washout operations.

- Straw bales, wood stakes, and sandbag materials should conform to the provisions in SE-9, Straw Bale Barrier.
- Plastic lining material should be a minimum of 10 mil in polyethylene sheeting and should be free of holes, tears, or other defects that compromise the impermeability of the material.

- Temporary Concrete Washout Facility (Type Below Grade)
  - Temporary concrete washout facilities (type below grade) should be constructed as shown on the details at the end of this BMP, with a recommended minimum length and minimum width of 10 ft. The quantity and volume should be sufficient to contain all liquid and concrete waste generated by washout operations.
  - Lath and flagging should be commercial type.
  - Plastic lining material should be a minimum of 10 mil polyethylene sheeting and should be free of holes, tears, or other defects that compromise the impermeability of the material.

Removal of Temporary Concrete Washout Facilities

- When temporary concrete washout facilities are no longer required for the work, the hardened concrete should be removed and disposed of. Materials used to construct temporary concrete washout facilities should be removed from the site of the work and disposed of.
- Holes, depressions or other ground disturbance caused by the removal of the temporary concrete washout facilities should be backfilled and repaired.

Costs

All of the above are low cost measures.

Inspection and Maintenance

- Inspect and verify that activity–based BMPs are in place prior to the commencement of associated activities. While activities associated with the BMP are under way, inspect weekly during the rainy season and of two-week intervals in the non-rainy season to verify continued BMP implementation.
- Temporary concrete washout facilities should be maintained to provide adequate holding capacity with a minimum freeboard of 4 in. for above grade facilities and 12 in. for below grade facilities. Maintaining temporary concrete washout facilities should include removing and disposing of hardened concrete and returning the facilities to a functional condition. Hardened concrete materials should be removed and disposed of.
- Washout facilities must be cleaned, or new facilities must be constructed and ready for use once the washout is 75% full.

References

Blueprint for a Clean Bay: Best Management Practices to Prevent Stormwater Pollution from Construction Related Activities; Santa Clara Valley Nonpoint Source Pollution Control Program, 1995.

Stormwater Quality Handbooks - Construction Site Best Management Practices (BMPs) Manual, State of California Department of Transportation (Caltrans), November 2000.

Stormwater Management for Construction Activities; Developing Pollution Prevention Plans and Best Management Practice, EPA 832-R-92005; USEPA, April 1992.

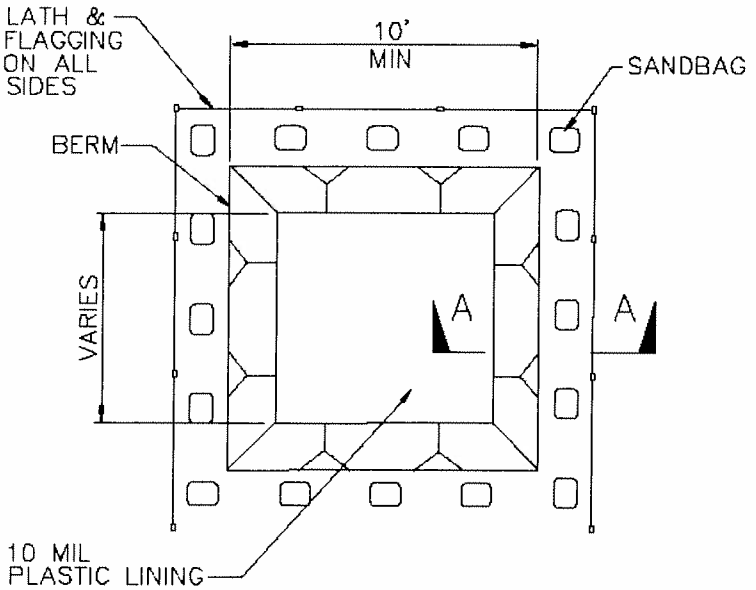

PLAN
NOT TO SCALE
TYPE "BELOW GRADE"

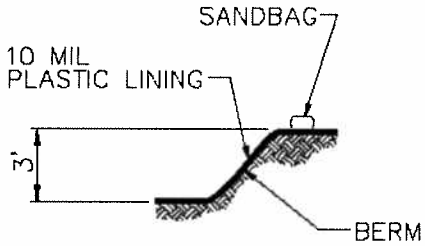

SECTION A–A
NOT TO SCALE

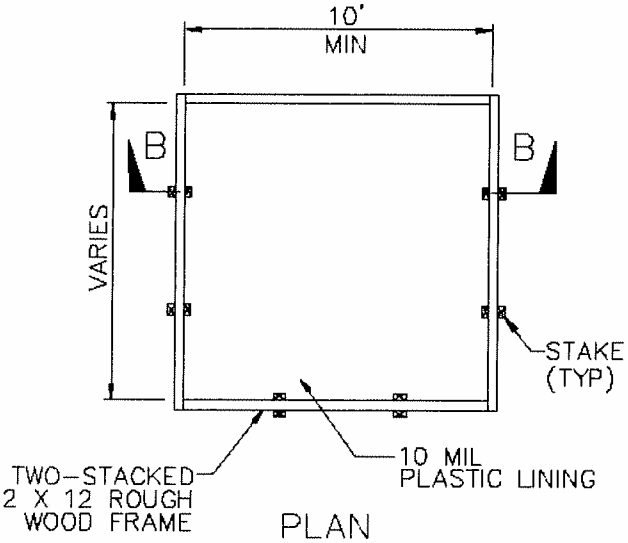

PLAN
NOT TO SCALE
TYPE "ABOVE GRADE"

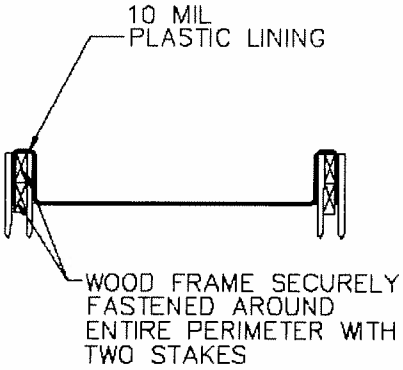

SECTION B–B
NOT TO SCALE

NOTES

1. ACTUAL LAYOUT DETERMINED IN FIELD.
2. THE CONCRETE WASHOUT SIGN SHALL BE INSTALLED WITHIN 30 FT. OF THE TEMPORARY CONCRETE WASHOUT FACILITY.

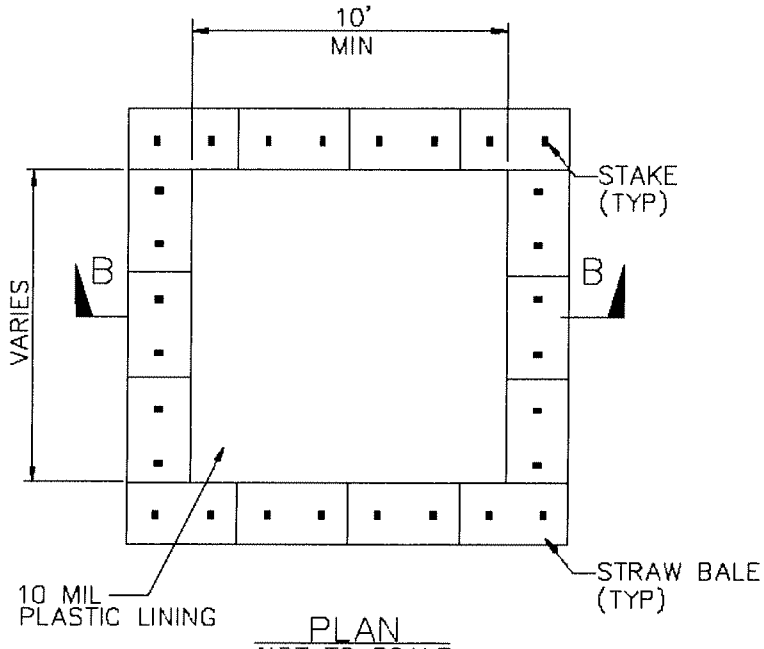

PLAN
NOT TO SCALE
TYPE "ABOVE GRADE"
WITH STRAW BALES

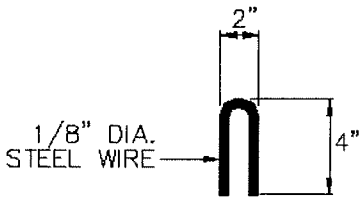

STAPLE DETAIL

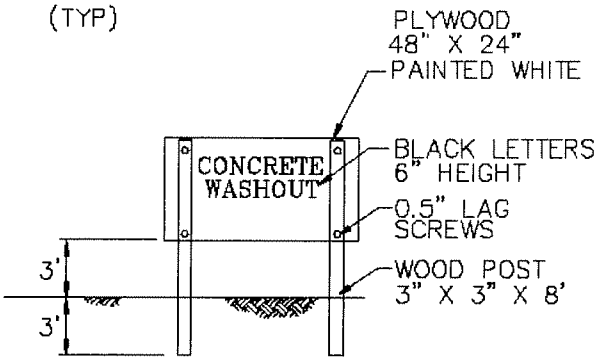

CONCRETE WASHOUT
SIGN DETAIL
(OR EQUIVALENT)

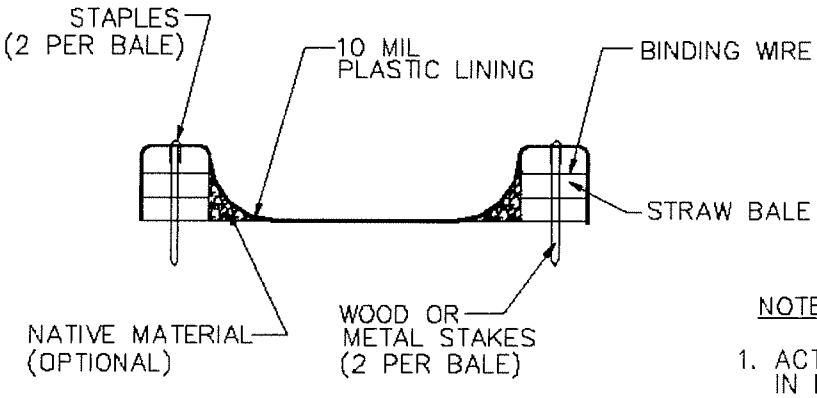

SECTION B–B
NOT TO SCALE

NOTES

1. ACTUAL LAYOUT DETERMINED IN FIELD.
2. THE CONCRETE WASHOUT SIGN SHALL BE INSTALLED WITHIN 30 FT. OF THE TEMPORARY CONCRETE WASHOUT FACILITY.

Sanitary/Septic Waste Management WM-9

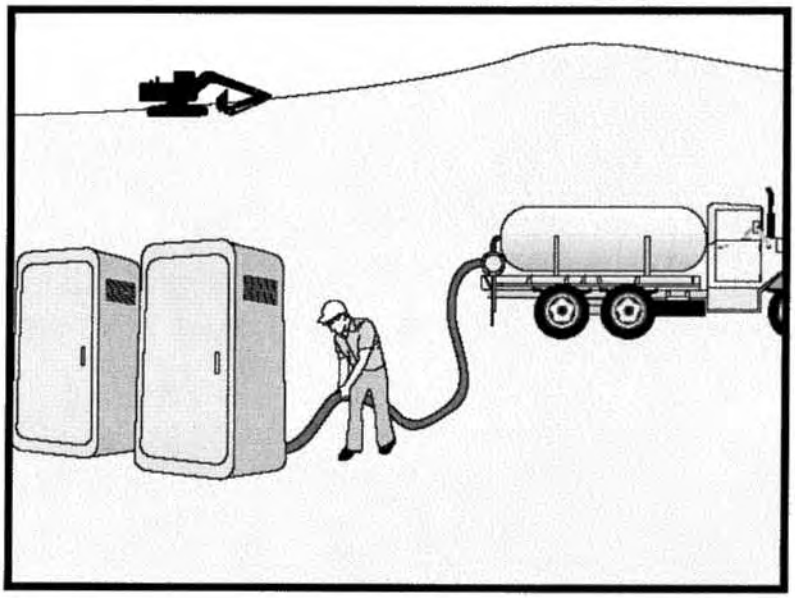

Objectives

EC	Erosion Control	
SE	Sediment Control	
TC	Tracking Control	
WE	Wind Erosion Control	
NS	Non-Stormwater Management Control	
WM	Waste Management and Materials Pollution Control	☑

Legend:

☑ Primary Objective

☒ Secondary Objective

Targeted Constituents

Sediment	
Nutrients	☑
Trash	☑
Metals	
Bacteria	☑
Oil and Grease	
Organics	☑

Potential Alternatives

None

Description and Purpose

Proper sanitary and septic waste management prevent the discharge of pollutants to stormwater from sanitary and septic waste by providing convenient, well-maintained facilities, and arranging for regular service and disposal.

Suitable Applications

Sanitary septic waste management practices are suitable for use at all construction sites that use temporary or portable sanitary and septic waste systems.

Limitations

None identified.

Implementation

Sanitary or septic wastes should be treated or disposed of in accordance with state and local requirements. In many cases, one contract with a local facility supplier will be all that it takes to make sure sanitary wastes are properly disposed.

Storage and Disposal Procedures

- Temporary sanitary facilities should be located away from drainage facilities, watercourses, and from traffic circulation. When subjected to high winds or risk of high winds, temporary sanitary facilities should be secured to prevent overturning.
- Wastewater should not be discharged or buried within the project site.

- Sanitary and septic systems that discharge directly into sanitary sewer systems, where permissible, should comply with the local health agency, city, county, and sewer district requirements.
- Only reputable, licensed sanitary and septic waste haulers should be used.
- Sanitary facilities should be located in a convenient location.
- Untreated raw wastewater should never be discharged or buried.
- Temporary septic systems should treat wastes to appropriate levels before discharging.
- If using an onsite disposal system (OSDS), such as a septic system, local health agency requirements must be followed.
- Temporary sanitary facilities that discharge to the sanitary sewer system should be properly connected to avoid illicit discharges.
- Sanitary and septic facilities should be maintained in good working order by a licensed service.
- Regular waste collection by a licensed hauler should be arranged before facilities overflow.

Education

- Educate employees, subcontractors, and suppliers on sanitary and septic waste storage and disposal procedures.
- Educate employees, subcontractors, and suppliers of potential dangers to humans and the environment from sanitary and septic wastes.
- Instruct employees, subcontractors, and suppliers in identification of sanitary and septic waste.
- Hold regular meetings to discuss and reinforce disposal procedures (incorporate into regular safety meetings).
- Establish a continuing education program to indoctrinate new employees.

Costs

All of the above are low cost measures.

Inspection and Maintenance

- Inspect and verify that activity–based BMPs are in place prior to the commencement of associated activities. While activities associated with the BMP are under way, inspect weekly during the rainy season and of two-week intervals in the non-rainy season to verify continued BMP implementation.
- Arrange for regular waste collection.
- If high winds are expected, portable sanitary facilities must be secured with spikes or weighed down to prevent over turning.

References

Stormwater Quality Handbooks - Construction Site Best Management Practices (BMPs) Manual, State of California Department of Transportation (Caltrans), November 2000.

Stormwater Management for Construction Activities; Developing Pollution Prevention Plans and Best Management Practice, EPA 832-R-92005; USEPA, April 1992.

Attachment R

Sampling Activity Log

RAIN EVENT GENERAL INFORMATION				
Project Name	San Gabriel Generating Station Project			
Project Number	Pending			
Contractor				
Sampler's Name				
Signature				
Date of Sampling				
Season (Check Applicable)	❒ Rainy		❒ Non-Rainy	
Storm Data	Storm Start Date & Time:		Storm Duration (hrs):	
	Time elapsed since last storm (Circle Applicable Units)	Min. Hr. Days	Approximate Rainfall Amount (inches)	

For rainfall information: http://cdec.water.ca.gov/weather.html or http://www.wrh.noaa.gov/wrhq/nwspage.html

SAMPLE LOG		
Sample Identification	**Sample Location**	**Sample Collection Date and Time**

Specific sample locations descriptions may include: 100 ft upstream from discharge at eastern boundary, runoff from northern waste storage area, downgradient of inlet located near the intersection of A Street and B avenue, etc.

FIELD ANALYSIS		
❑Yes	❑ No	
Sample Identification	**Test**	**Result**

Attachment S

Pollutant Testing Guidance Table

Attachment S
Pollutant Testing Guidance Table [1]

Category	Construction Site Material	Visually Observable?	Pollutant Indicators [2]	Suggested Analyses Field [3]	Laboratory
Asphalt Products	Hot Asphalt	Yes - Rainbow Surface or Brown Suspension	Visually Observable - No Testing Required		
	Asphalt Emulsion				
	Liquid Asphalt (tack coat)				
	Cold Mix				
	Crumb Rubber	Yes – Black, solid material	Visually Observable - No Testing Required		
	Asphalt Concrete (Any Type)	Yes - Rainbow Surface or Brown Suspension	Visually Observable - No Testing Required		
Cleaning Products	Acids	No	**pH** Acidity Anions (acetic acid, phosphoric acid, sulfuric acid, nitric acid, hydrogen chloride)	pH Meter Acidity Test Kit	EPA 150.1 (pH)
					SM 2310B (Acidity)
					EPA 300.0 (Anion)
	Bleaches	No	Residual Chlorine	Chlorine	SM 4500-CL G (Res. Chlorine)
	Detergents	Yes - Foam	Visually Observable - No Testing Required		
	TSP	No	Phosphate	Phosphate	EPA 365.3 (Phosphate)
	Solvents	No	VOC	None	EPA 601/602 or EPA 624 (VOC)
			SVOC	None	EPA 625 (SVOC)
Portland Concrete	Portland Cement (PCC)	Yes - Milky Liquid	Visually Observable - No Testing Required		

Attachment S
Pollutant Testing Guidance Table [1]

Category	Construction Site Material	Visually Observable?	Pollutant Indicators [2]	Suggested Analyses Field [3]	Laboratory
Cement & Masonry Products	Masonry products	No	**pH**	pH Meter Alkalinity or Acidity Test Kit	EPA 150.1 (pH)
			Alkalinity		SM 2320 (Alkalinity)
	Sealant (Methyl Methacrylate - MMA)	No	Methyl Methacrylate	None	EPA 625 (SVOC)
			Cobalt		EPA 200.8 (Metal)
			Zinc		
	Incinerator Bottom Ash Bottom Ash Steel Slag Foundry Sand Fly Ash Municipal Solid Waste	No	**Aluminum** **Calcium** **Vanadium** **Zinc**	Calcium Test	EPA 200.8 (Metal) EPA 200.7 (Calcium)
	Mortar	Yes - Milky Liquid	Visually Observable - No Testing Required		
	Concrete Rinse Water	Yes - Milky Liquid	Visually Observable - No Testing Required		
	Non-Pigmented Curing Compounds	No	Acidity	pH Meter Alkalinity or Acidity Test Kit	SM 2310B (Acidity)
			Alkalinity		SM 2320 (Alkalinity)
			pH		EPA 150.1 (pH)
			VOC		EPA 601/602 or EPA 624 (VOC)
			SVOC		EPA 625 (SVOC)

Attachment S
Pollutant Testing Guidance Table [1]

Category	Construction Site Material	Visually Observable?	Pollutant Indicators [2]	Suggested Analyses Field [3]	Laboratory
Painting Products	Paint	Yes	Visually Observable - No Testing Required		
	Paint Strippers	No	VOC	None	EPA 601/602 or EPA 624 (VOC)
			SVOC	None	EPA 625 (SVOC)
	Resins	No	COD	None	EPA 410.4 (COD)
			SVOC		EPA 625 (SVOC)
	Sealants	No	COD	None	EPA 410.4 (COD)
	Solvents	No	COD	None	EPA 410.4 (COD)
			VOC		EPA 601/602 or EPA 624 (VOC)
			SVOC		EPA 625 (SVOC)
	Lacquers, Varnish, Enamels, and Turpentine	No	COD	None	EPA 410.4 (COD)
			VOC		EPA 601/602 or EPA 624 (VOC)
			SVOC		EPA 625 (SVOC)
	Thinners	No	VOC	None	EPA 601/602 or EPA 624 (VOC)
			COD		EPA 410.4 (COD)
Portable Toilet Waste Products	Portable Toilet Waste	Yes	Visually Observable - No Testing Required		
Contaminated Soil [5]					

Attachment S
Pollutant Testing Guidance Table [1]

Category	Construction Site Material	Visually Observable?	Pollutant Indicators [2]	Suggested Analyses Field [3]	Laboratory
Adhesives	Adhesives	No	COD	None	EPA 410.4 (COD)
			Phenols	Phenol	EPA 420.1 (Phenol)
			SVOC	None	EPA 625 (SVOC)
Vehicle	Antifreeze and Other Vehicle Fluids	Yes - Colored Liquid	Visually Observable - No Testing Required		
	Batteries	No	Sulfuric Acid	None	EPA 300.0 (Sulfate)
			Lead	None	EPA 200.8 (Metal)
			pH	pH Meter Alkalinity or Acidity Test Kit	EPA 150.1 (pH)
	Fuels, Oils, Lubricants	Yes - Rainbow Surface Sheen and Odor	Visually Observable - No Testing Required		

Attachment S
Pollutant Testing Guidance Table [1]

Category	Construction Site Material	Visually Observable?	Pollutant Indicators [2]	Suggested Analyses Field [3]	Laboratory

Notes:

1. 1 If specific pollutant is known, analyze only for that specific pollutant. See MSDS to verify.
2. For each construction material, test for one of the pollutant indicators. Bolded pollutant indicates lowest analysis cost or best indicator. However, the composition of the specific construction material, if known, is the first criterion for selecting which analysis to use.
3. See www.hach.com, www.lamotte.com, www.ysi.com and www.chemetrics.com for some of the test kits
4. If the type of inorganic fertilizer is unknown, analyze for all pollutant indicators listed.
5. Only if special handling requirements are required in the contract documents for aerially deposited lead (ADL)
6. If used with a dye or fiber matrix, it is considered visually observable and no testing is required.
7. Based upon research conducted by the State of California Department of Transportation (Caltrans), the following copolymers/polymers do not discharge pollutants and water quality sampling and analysis is **not** required: Super Tak™, M-Binder™, Fish Stik™, Pro40dc™, Fisch-Bond™, and Soil Master WR™.

Attachment T

Discharge Reporting Log

Project Name: San Gabriel Generating Station Project

Project Number: Pending

Date	Material(s) Discharged	Estimated Quantity	Observed By

Attachment U
Precipitation Data

POINT PRECIPITATION FREQUENCY ESTIMATES FROM NOAA ATLAS 14

California 34.09 N 117.53 W 1095 feet

from "Precipitation-Frequency Atlas of the United States" NOAA Atlas 14, Volume 1, Version 4
G.M. Bonnin, D. Martin, B. Lin, T. Parzybok, M.Yekta, and D. Riley
NOAA, National Weather Service, Silver Spring, Maryland, 2006

Extracted: Wed Mar 7 2007

Precipitation Frequency Estimates (inches)

ARI* (years)	5 min	10 min	15 min	30 min	60 min	120 min	3 hr	6 hr	12 hr	24 hr	48 hr	4 day	7 day	10 day	20 day	30 day	45 day	60 day
1	0.15	0.23	0.28	0.38	0.47	0.69	0.88	1.31	1.80	2.25	2.62	3.25	3.81	4.21	4.94	5.83	6.69	7.77
2	0.19	0.29	0.36	0.48	0.60	0.88	1.11	1.66	2.31	2.93	3.44	4.31	5.07	5.61	6.58	7.79	8.97	10.40
5	0.25	0.38	0.47	0.64	0.79	1.14	1.43	2.15	3.04	3.94	4.74	6.09	7.28	8.01	9.41	11.17	13.06	15.04
10	0.30	0.46	0.57	0.77	0.96	1.36	1.69	2.52	3.59	4.72	5.75	7.46	9.01	9.89	11.60	13.75	16.31	18.71
25	0.38	0.58	0.72	0.97	1.20	1.67	2.07	3.05	4.36	5.78	7.17	9.36	11.47	12.54	14.69	17.33	21.00	23.94
50	0.45	0.68	0.85	1.14	1.41	1.92	2.37	3.47	4.95	6.61	8.30	10.88	13.45	14.69	17.19	20.18	24.86	28.21
100	0.52	0.80	0.98	1.33	1.64	2.20	2.69	3.90	5.57	7.47	9.49	12.49	15.59	17.00	19.84	23.19	29.07	32.83
200	0.60	0.92	1.14	1.53	1.90	2.50	3.03	4.35	6.21	8.37	10.75	14.19	17.88	19.45	22.66	26.34	33.62	37.79
500	0.72	1.10	1.36	1.83	2.27	2.92	3.51	4.97	7.08	9.59	12.51	16.55	21.15	22.94	26.64	30.75	40.22	44.91
1000	0.82	1.25	1.55	2.09	2.59	3.27	3.89	5.45	7.75	10.55	13.92	18.45	23.82	25.78	29.85	34.28	45.70	50.77

Text version of table

* These precipitation frequency estimates are based on a partial duration series. **ARI** is the Average Recurrence Interval. Please refer to the documentation for more information. NOTE: Formatting forces estimates near zero to appear as zero.

Partial duration based Point Precipitation Frequency Estimates Version: 4
34.09 N 117.53 W 1095 ft

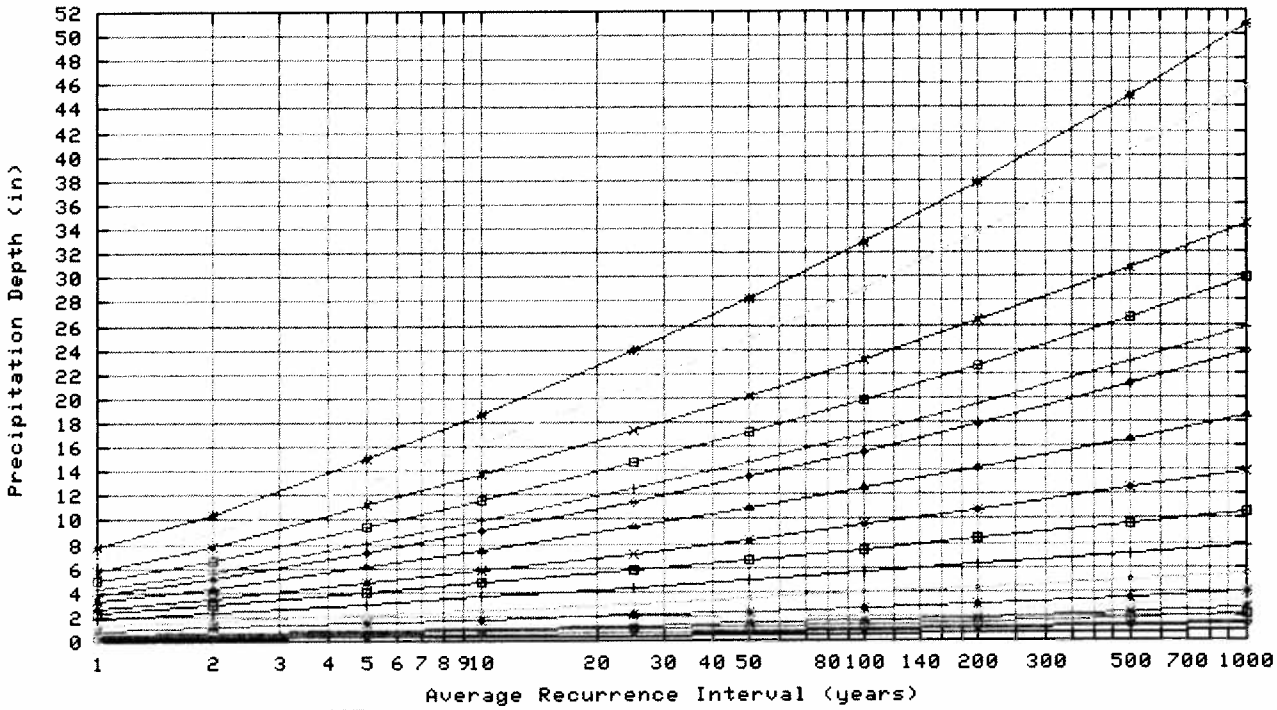

Wed Mar 07 14:22:28 2007

Duration			
5-min		48-hr	30-day
10-min	3-hr	4-day	
15-min		7-day	60-day
30-min	12-hr	10-day	
60-min	24-hr	20-day	

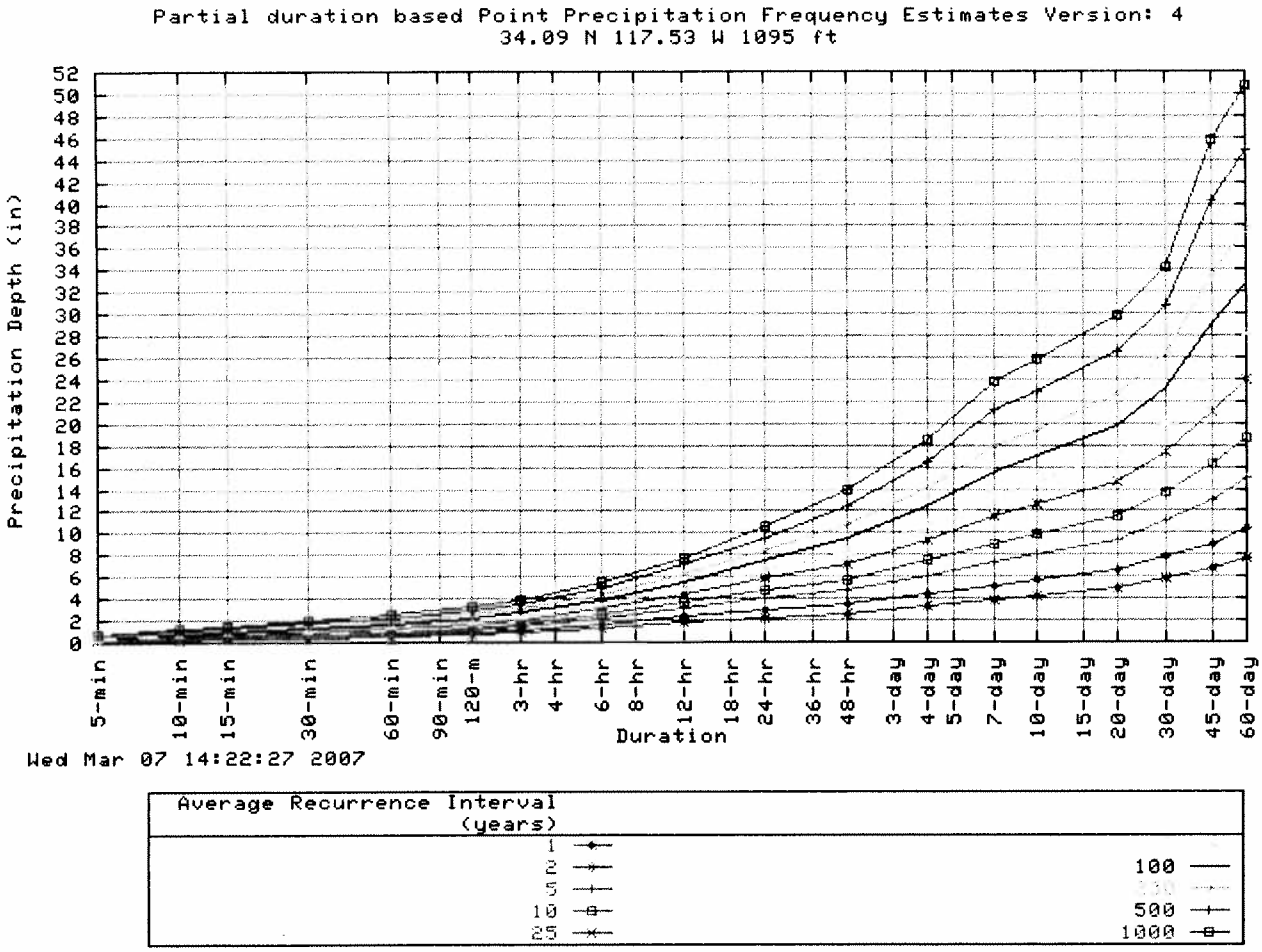

Confidence Limits -

* Upper bound of the 90% confidence interval Precipitation Frequency Estimates (inches)																		
ARI** (years)	5 min	10 min	15 min	30 min	60 min	120 min	3 hr	6 hr	12 hr	24 hr	48 hr	4 day	7 day	10 day	20 day	30 day	45 day	60 day
1	0.17	0.26	0.32	0.43	0.53	0.78	0.99	1.47	2.01	2.58	2.98	3.75	4.43	4.89	5.77	6.76	8.10	9.24
2	0.21	0.33	0.40	0.54	0.67	0.99	1.24	1.85	2.58	3.33	3.91	4.96	5.92	6.52	7.69	9.06	10.85	12.36
5	0.28	0.43	0.53	0.72	0.89	1.27	1.60	2.38	3.38	4.49	5.37	7.00	8.48	9.31	10.98	12.95	15.77	17.84
10	0.34	0.52	0.64	0.86	1.07	1.51	1.89	2.80	4.00	5.36	6.51	8.55	10.48	11.47	13.50	15.90	19.65	22.14
25	0.43	0.65	0.81	1.08	1.34	1.85	2.30	3.39	4.85	6.56	8.09	10.72	13.30	14.51	17.07	20.01	25.15	28.25
50	0.50	0.76	0.94	1.27	1.57	2.13	2.63	3.85	5.51	7.49	9.36	12.45	15.60	16.96	19.95	23.28	29.66	33.20
100	0.58	0.88	1.10	1.48	1.83	2.44	2.99	4.33	6.21	8.46	10.72	14.30	18.07	19.58	22.99	26.74	34.55	38.56
200	0.67	1.02	1.26	1.70	2.11	2.77	3.37	4.82	6.92	9.47	12.15	16.23	20.70	22.40	26.19	30.33	39.95	44.40
500	0.80	1.22	1.52	2.04	2.53	3.24	3.92	5.51	7.89	10.85	14.16	18.97	24.47	26.39	30.75	35.37	47.78	52.75
1000	0.92	1.40	1.73	2.33	2.88	3.64	4.35	6.07	8.68	11.94	15.79	21.16	27.59	29.72	34.52	39.49	54.24	59.58

* The **upper** bound of the confidence interval at 90% confidence level is the value which 5% of the simulated quantile values for a given frequency are **greater** than.
** These precipitation frequency estimates are based on a partial duration series. **ARI** is the Average Recurrence Interval.
Please refer to the documentation for more information. NOTE: Formatting prevents estimates near zero to appear as zero.

* Lower bound of the 90% confidence interval Precipitation Frequency Estimates (inches)																		
ARI** (years)	5 min	10 min	15 min	30 min	60 min	120 min	3 hr	6 hr	12 hr	24 hr	48 hr	4 day	7 day	10 day	20 day	30 day	45 day	60 day

1	0.13	0.20	0.25	0.34	0.42	0.63	0.79	1.18	1.60	1.98	2.30	2.83	3.27	3.63	4.27	4.98	5.66	6.61
2	0.17	0.26	0.32	0.43	0.54	0.80	1.00	1.49	2.05	2.58	3.02	3.75	4.38	4.84	5.70	6.67	7.58	8.85
5	0.23	0.34	0.42	0.57	0.71	1.02	1.29	1.92	2.69	3.46	4.15	5.28	6.26	6.90	8.14	9.54	11.03	12.79
10	0.27	0.41	0.51	0.69	0.85	1.22	1.52	2.25	3.19	4.13	5.03	6.45	7.73	8.49	10.01	11.72	13.73	15.84
25	0.34	0.52	0.64	0.86	1.07	1.49	1.84	2.71	3.85	5.05	6.23	8.06	9.76	10.70	12.63	14.73	17.58	20.17
50	0.39	0.60	0.74	1.00	1.24	1.70	2.10	3.07	4.36	5.75	7.18	9.31	11.39	12.46	14.69	17.07	20.70	23.64
100	0.45	0.69	0.86	1.16	1.43	1.94	2.37	3.44	4.88	6.48	8.18	10.63	13.11	14.34	16.87	19.53	24.00	27.34
200	0.52	0.79	0.98	1.32	1.63	2.18	2.65	3.81	5.40	7.20	9.21	11.98	14.93	16.28	19.14	22.04	27.52	31.23
500	0.61	0.93	1.15	1.55	1.92	2.52	3.04	4.32	6.11	8.19	10.61	13.85	17.44	19.02	22.28	25.50	32.52	36.61
1000	0.69	1.04	1.29	1.74	2.16	2.79	3.35	4.71	6.65	8.96	11.70	15.31	19.48	21.18	24.77	28.24	36.63	40.97

* The **lower** bound of the confidence interval at 90% confidence level is the value which 5% of the simulated quantile values for a given frequency are **less** than.
** These precipitation frequency estimates are based on a partial duration maxima series. **ARI** is the Average Recurrence Interval.

Please refer to the documentation for more information. NOTE: Formatting prevents estimates near zero to appear as zero.

Maps -

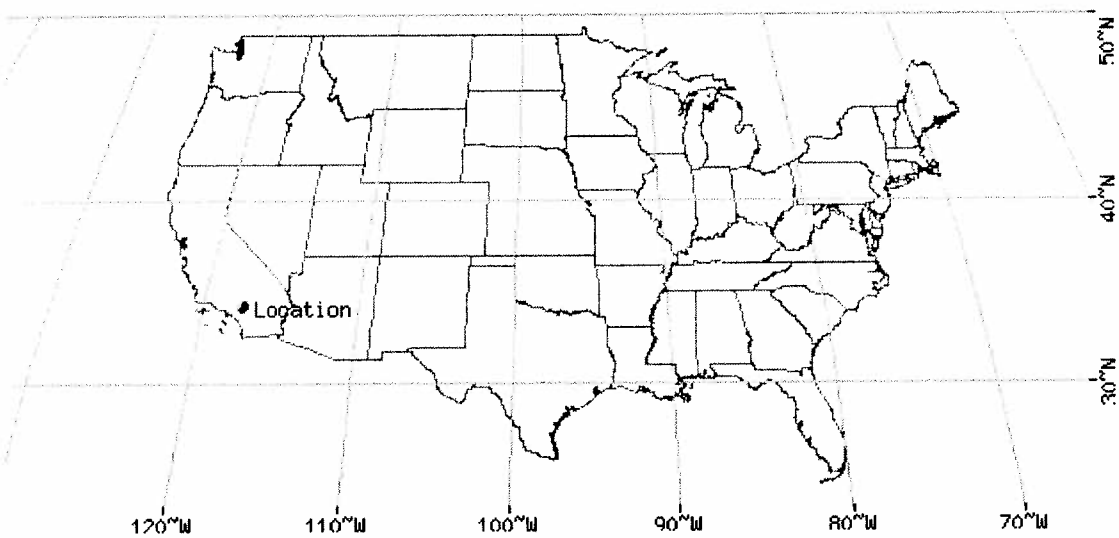

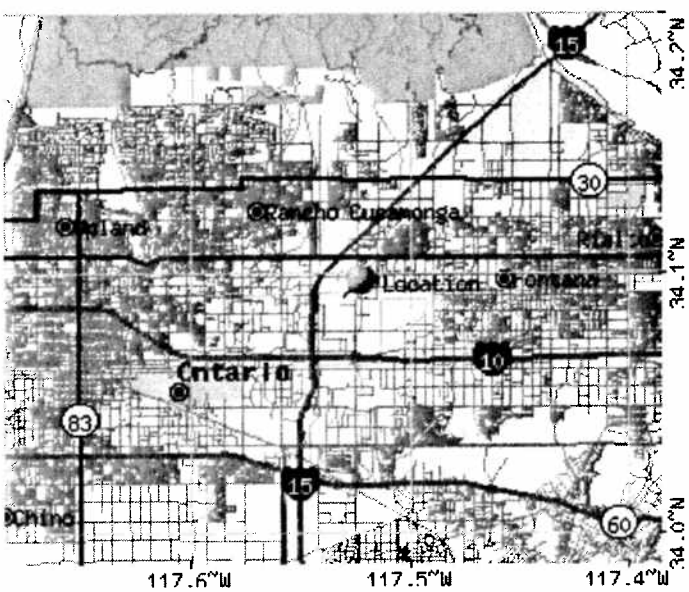

These maps were produced using a direct map request from the U.S. Census Bureau Mapping and Cartographic Resources **Tiger Map Server**.

Please read disclaimer for more information.

LEGEND

- State
- County
- Indian Resv
- Lake/Pond/Ocean
- Street
- Expressway
- Highway
- Connector
- Stream
- Military Area
- National Park
- Other Park
- City
- County

Scale 1:228583 (0 2 4 6 8 mi; 0 2 4 6 8 10 km)
*average--true scale depends on monitor resolution

Other Maps/Photographs -

View USGS digital orthophoto quadrangle (DOQ) covering this location from TerraServer; **USGS Aerial Photograph** may also be

available
from this site. A DOQ is a computer-generated image of an aerial photograph in which image displacement caused by terrain relief and camera tilts has been removed. It combines the image characteristics of a photograph with the geometric qualities of a map. Visit the USGS for more information.

Watershed/Stream Flow Information -

Find the Watershed for this location using the U.S. Environmental Protection Agency's site.

Climate Data Sources -

Precipitation frequency results are based on data from a variety of sources, but largely NCDC. The following links provide general information
about observing sites in the area, regardless of if their data was used in this study. For detailed information about the stations used in this study,
please refer to our documentation.

Using the **National Climatic Data Center's (NCDC)** station search engine, locate other climate stations within:

+/-30 minutes ...OR... +/-1 degree of this location (34.09/-117.53). Digital ASCII data can be obtained directly from **NCDC**.

Find Natural Resources Conservation Service (NRCS) SNOTEL (SNOwpack TELemetry) stations by visiting the **Western Regional Climate Center's state-specific SNOTEL station maps**.

Hydrometeorological Design Studies Center
DOC/NOAA/National Weather Service
1325 East-West Highway
Silver Spring, MD 20910

(301) 713-1669
Questions?: HDSC.Questions@noaa.gov

Disclaimer

Attachment V

Intensity/Duration/Frequency Curves

Reliant Etiwanda Inc. Combined Cycle Project Intensity-Duration-Frequency Precipitation Data by Event Frequency

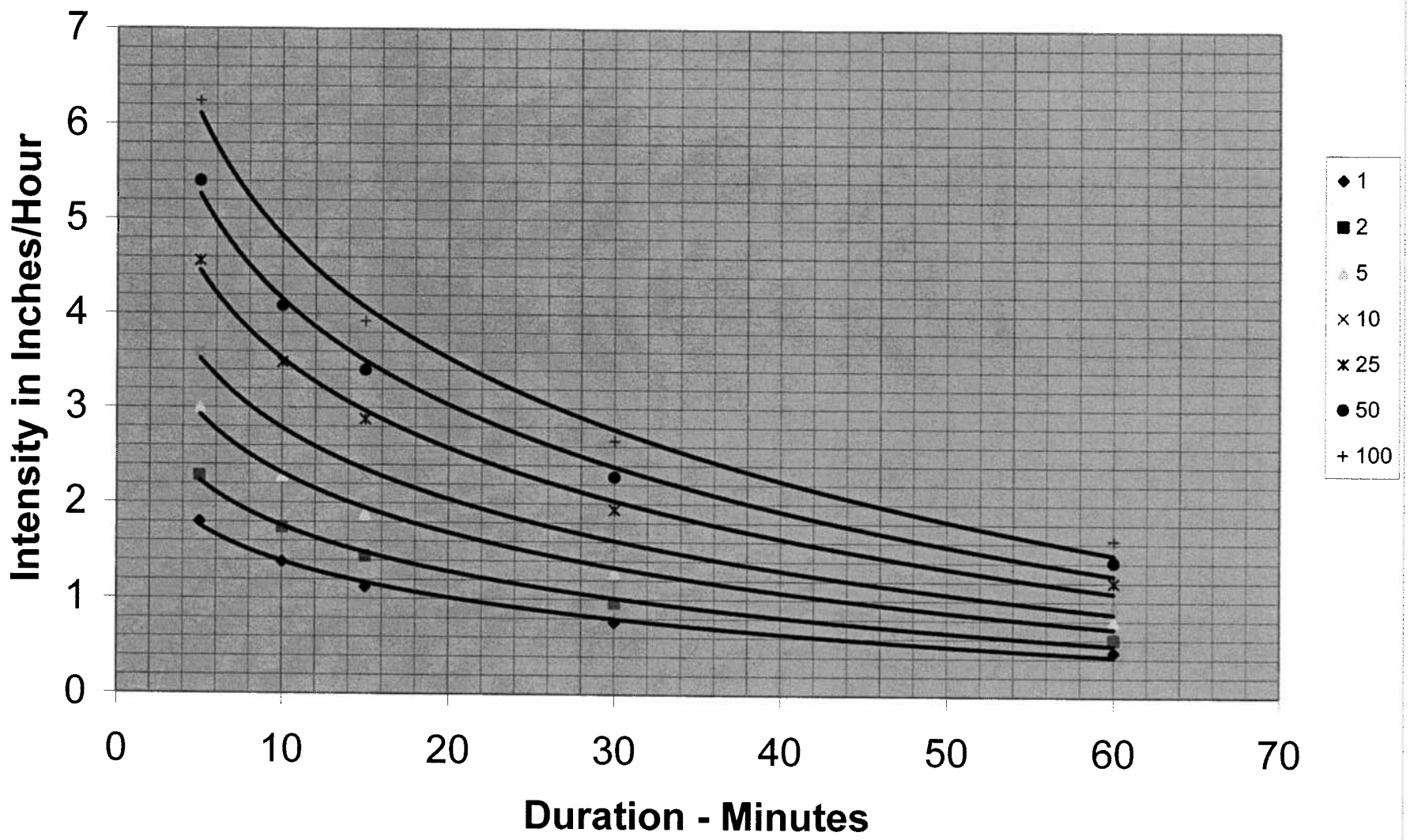

Attachment W

San Bernardino County Detention Basin Criteria

AUTOMATIC COVER SHEET

DATE: DEC-06-2006 WED 10:22 AM

TO:

FAX #: 913122693100

FROM:

FAX #:

18 PAGES WERE SENT

(INCLUDING THIS COVER PAGE)

DETENTION BASIN DESIGN CRITERIA FOR SAN BERNARDINO COUNTY

The following design parameters and procedures are listed as guidelines to insure proper detention basin operation. When necessary, these guidelines may be modified if approved in writing by both the Flood Control District and Land Management Department.

I. Definitions

A. Regional Detention Basin

1. A basin which can be incorporated into the Flood Control District's existing or proposed drainage system,

2. Basin owned and operated by the Flood Control District, although it may be joint use, and

3. A basin which will reduce the downstream peak flow rate and the necessary downstream storm drain size.

B. Local Detention Basin

1. A basin which will not be incorporated into the Flood Control District's existing or proposed drainage system,

2. A basin owned by an individual or organization other than the Flood Control District, and

3. A basin which will reduce the downstream peak flow rate, but will not be considered in downsizing future downstream storm drains.

C. Joint Use Detention Basin: A regional or local detention basin which has an additional use such as football field, parking lot, golf course, lake or etc.

D. Temporary Detention Basin

1. A local detention basin used to reduce downstream peak flow rates until ultimate storm drain facilities can be constructed as part of a phased development, and

2. Generally the life of the basin shall not exceed 10 years.

SEE CHANGE PER ATTACHED MEMO

II. Basin Capacity and Outlet Drain

A. When a basin (regional, local, temporary or joint use) is to be used to mitigate downstream impacts due to increased flows generated by a development, the basin capacity and outlet size shall be such that the post-development peak flow rate generated by the site shall be less than or equal to 90% of the pre-development peak flow rate from the site for all frequency storms up to and including 100-year (i.e. the peak 2 year post-development flow rate is equal to or less than 90% of the peak 2 year pre-development flow rate from the site and etc. for all frequency storm events through 100-year).

1. Only 2, 10, 25 and 100-year storms need to be analyzed.

2. Additional studies shall be submitted where there exists more than one basin in the drainage area under review. The studies shall address the timing of the peak flow rates from the basins to ensure downstream flow rates are not increased.

B. When a basin (generally regional or regional joint use) is to be used to reduce the size of a master planned downstream drainage facility, the basin capacity and outlet size shall be such that the 100 year basin peak outflow rate is no greater than the downstream facility's design capacity.

1. Open channel design capacities shall be per the San Bernardino County Flood Control District Standard Plat 100 ("San Bernradino County Standards and Specifications"). A bulking factor is not necessary when the basin is designed to handle debris and the downstream channel is lined.

2. Pressure flow closed conduits shall be designed such that the hydraulic grade line is below the ground or street surface. In those reaches where no surface flow will be intercepted (now or in the future), a hydraulic grade line which encroaches on or is slightly higher than the ground or street surface will be acceptable.

3. Non-pressure flow closed conduit capacities shall be based on a flow depth no greater than 0.8 times the conduits diameter or height.

C. Where downstream erosion is a concern the duration of erosive flow velocities for all frequency storms shall not be substantially increased unless other forms of mitigation are provided. This can be accomplished by reducing the peak flowrate further than that required above. Refer to "Handbook of Hydraulics" by Horace Williams King and Earnest F. Brater, and "Open-Channel Hydraulics" by Ven Te Chow, Ph.d. for erosive flow velocities.

D. When there exists a potential for debris entering the basin, the basin capacity shall be increased or a desilting basin provided to accomodate the debris production generated from a 100-year storm four years after a burn (over the entire watershed), plus 20% due to maintenance uncertainties.

1. For all basins where a significant amount of debris accumulation is anticipated, a debris disposal area or areas shall be provided within a reasonable hauling distance.

2. "A New Method of Estimating Debris-Storage Requirements for Debris Basins" by Fred E. Tatum of the U.S. Army Corps of Engineers shall be used for determining the 100-year debris volume.

3. Local basins shall not be located in desert areas where there exists the potential for debris entering the basin (i.e., locations where flows are directed to the basin by natural drainage courses or earth graded channels which handle flows from undeveloped watersheds). It is recommended that the flows from the development be conducted to the basin in a hardlined facility (i.e. street or concrete channel), then outletted into the natural drainage course or earth channel.

4. Local detention basins shall not be fed by natural drainage courses or earth channels with undeveloped watersheds greater than 0.5 square mile.

5. The basin capacity for local detention basins fed by natural drainage courses or earth channels with undeveloped watershed less than 0.5 square mile, shall be enlarged to handle an additional 5 years of accumulated annual debris based on the attached figure 1.

6. Generally regional detention basins with undeveloped watersheds shall be flow-by basins or have a separate debris basin upstream of the detention basin.

7. The basin capacity for detention basins located in watersheds known to have a high risk of burning, shall be increased as determined by the Flood Control District.

E. Outlet Drain

1. The outlet pipe for all basins except temporary basins shall be a minimum 24" RCP (1350 D minimum) for local basins and a minimum 36" RCP (1350 D minimum) for regional basins. The outlet pipe or conduit shall be encased with cut-off collars per the "Los Angeles County Flood Control Design Manual - Debris Dams and Basins" or designed per "Section 242. Cut-and-Cover Conduit Detail" of the Bureau of Reclamation's publication "Design of Small Dams".

   a) Reinforced concrete collars generally from 2 to 3 feet high, 12 to 18 inches wide, and spaced from 7 to 10 times their height shall be provided.

   b) All joints for pipes not encased shall be rubber gasketed.

   c) The pipe shall be capable of withstanding H20 live loads plus the applicable dead loads.

   d) Erosion control measures shall be provided at the outlet of the basin outlet pipe.

   e) Temporary basin outlet pipes may be a minimum 24" C.M.P., 12 gauge with seep rings. Design considerations shall be as stated above.

2. A metered outlet structure may be necessary to provide the necessary flow attenuation for all frequency storms. "V"-shaped weirs and notched weirs are preferred over other alternates because they do not plug with debris and trash as easily as other designs.

3. All detention basin outlets should be sized so the basin will drain within 24 hours after the basin reaches its 100 year peak depth/volume. If the basin does not drain in 24 hours, further studies using longer duration storms will be necessary. The basin storage volume (capacity) may need to be increased to accomodate subsequent storms.

4. Trash racks shall be provided at the inlet to the basin outlet structure(s).

5. Anti-vortex devises shall be provided where warranted.

6. A depth gauge shall be provided on the basin outlet structure in order to monitor debris deposition and basin operation.

F. Analysis Methodology

1. Pre and post development peak flow rates shall be developed using the procedures outlined in the San Bernardino County's Hydrology Manual.

2. Basin inflow hydrographs shall be developed using the procedures outlined in the San Bernardino County's Hydrology Manual.

3. Basin outflow hydrographs shall be developed by the Modified Puls Method.

4. Channel hydrograph routing shall be calculated by the convex channel routing method or by moving the hydrograph utilizing travel time.

III. Water Surface Elevation and Depth

A. Local Basins

1. When feasible the 100 year design water surface elevation should be at or below existing natural ground. Generally no more than 50% of the basins 100 year storage depth should be above existing ground (i.e., 50% or more of the 100-year minimum storage depth must be below the lowest ground outside basin).

2. The necessary storage depth for debris plus the two year flow attenuation shall be below existing ground.

3. The basin's maximum water depth for 100-year design should be 6 feet or less.

4. When site conditions warrant and safety can be assured, the above depth requirements may be modified if the following conditions are met.

a) The detention basin is designed in accordance with the Los Angeles County Flood Control Distrit's "Design Manual - Debris Dams and Basins".

b) The basin embankment is constructed of material, or has a solid core, which does not allow seepage or piping to occur due to rodent holes.

B. Regional Basins

1. Depths shall be as approved by the Flood Control District.

2. Basins with heights greater than or equal to 25 feet and capacity greater than or equal to 15 Ac.ft., or a capacity greater than or equal to 50 ac. ft. and a height greater than or equal to 6 feet, shall be reviewed and approved by the State's Division of Safety of Dams. (See figure 2)

C. Joint Use Basins

1. Depths should be shallow and compatible with the secondary use.

2. Depths for parking lot, tennis court or other similar joint use basins should be no greater than 6 inches to 12 inches.

3. The allowable depth in most cases will be site specific and shall be approved by all agencies involved.

IV. Emergency Spillway

A. All detention basin spillways shall be designed to pass the fully developed 1000 year peak flow rate ($Q_{1000}=1.35\ Q_{100}$) or that peak flow rate required by the State's Division of Safety of Dams, whichever is greater.

B. Spillway outflows shall be adequately conveyed to a storm drain, drainage channel, street or an established watercourse.

C. Generally, all spillway structures shall be constructed of reinforced concrete. For temporary detention basins with an expected life less than 10 years the spillway may be constructed with grouted rock or other forms of approved protection designed to resist maximum design velocities.

D. When the spillway crest is more than 3 feet above the flowline of the facility the spillway outlets into, the spillway shall be constructed of reinforced concrete.

E. Generally the spillway crest shall be at, or above the basin's design 100 year high water line.

V. Freeboard to the Top of Embankment

A. Local and temporary basins shall have a minimum 1-foot of freeboard above the 1000-year HWL on the emergency spillway or 2-feet of freeboard above the 100-year HWL in the basin, whichever is more stringent.

B. Regional basins shall have a minimum 2-feet of freeboard above the 1000 year HWL on the emergency spillway. For basins with larger surface areas the freeboard shall be increased due to possible wave action. Also, a Seismic Seiche analysis shall be provided to determine necessary freeboard. Reference "Design of Small Dams" by the United States Department of Interior.

C. Joint use basins shall conform to the applicable local or regional freeboard requirements. For smaller basins such as parking lot and tennis court basins, the freeboard conditions may be reduced.

VI. Basin Embankment

A. Basin side slopes should be of 3H:1V or flatter on the wet side and 2H:1V or flatter on the dry side. Steeper slopes may be acceptable on a case by case basis if rock lined and recommended in the soils and geotechnical report. (See items C and D below for expanded requirements for report.)

B. Top Width of Levee

1. Regional and local basins - 15 feet minimum
2. Joint use - site specific
3. Refer to Section IX.C.

C. For design of the embankment abutments and adjacent slopes, a soils and geotechnical report shall be prepared by a soils and geotechnical engineer with a demonstrated expertise in earth fill dam design. The report shall be reviewed and approved by the Land Management Department <u>and</u> the San Bernardino County Flood Control District. The report shall include:

a) Site geology including bedding, foliation, fracture, joint, fault and land slide plane attitudes.

b) Seismic conditions including fault locations and potential seismic surface movements respective loadings and parameters of seismic shaking.

c) Potential impact of reservoir loading on geologic structure should be evaluated.

d) Detailed descriptions, locations, and logs of all field explorations.

e) Field and laboratory tests and analysis descriptions and results.

f) Ground water table elevation and analysis of near surface groundwater movement.

g) Recommended design parameters including, but not limited to the following for the dam and its natural abutments and slopes adjacent reservoir areas:

1. Lateral earth loadings
2. Shear strengths
3. Bearing capacities
4. Permeability
5. Slope stability analysis when saturated and during rapid drawdown conditions
6. Seive analysis
7. Sand equivalents
8. Liquefaction analysis and if appropriate; mitigation
9. Seismic Seiche analysis ___ 10. UBC Chapter 70

h) Special design and construction recommendations including, but not limited to the following:

1. Foundation preparation requirements

2. Suitability of materials for embankments (gradation, sand equivalent, etc.) and abutments

3. Compaction methods and minimum requirements

4. Seepage and piping control provisions

5. Potential for settlement

6. Seismic considerations

7. Minimum design factors of safety are:

	Without Seismic	With Seismic
Embankment, Abutment and Adjacent Slope Stability	1.5	1.1
Seepage - Piping	1.5	---

8. Necessity of impervious core or shear key

9. Erosion control of abutments.

D. Regional basins and local basins not meeting the depth and side slope requirements setforth previously shall be designed in accordance with the Los Angeles County Flood Control District's "Design Manual - Debris Dams and Basins".

VII. Basin Floor

A. A low flow channel shall be provided from the basin inlet(s) to the basin outlet.

1. Where basin slopes exceed 2% or produce erosive flow velocities the low flow channel should be protected from erosion with reinforced concrete, rock lining or other form of approved erosion protection.

2. Joint use basins

a) A low flow channel or conduit should be provided to conduct minor flows around the dual use facilities wherever possible. Low flow channels may not be necessary for parking lot basins or other similar joint uses.

b) Low flow channel may be grass lined if there exists a maintenance program which includes mowing and maintenance of turf in good condition and velocities of flow through the various stages of discharge are low enough to be nonerosive.

B. Earth basin floors shall slope at a minimum 0.5% grade to the low flow channel.

C. Earth basin floors shall have a minimum grade of 0.5% from the inlet to the outlet.

VIII. Inlet Structures

A. Where storm drains enter the basin, energy dissipators and/or erosion protection shall be provided. Plans must be approved by the San Bernardino County Flood Control District Permit Section before plan approval if the basin is to be operated and maintained by the Flood Control District.

B. Where natural drainage courses or channels enter the basin some form of invert stabilization such as a reinforced concrete spillway shall be provided.

C. Energy dissipators may be required when the inletting flow velocities exceed 5 fps.

D. Inletting storm drains shall be a minimum 24" RCP (1350 D).

IX. Access

A. Access to any type of detention basin area shall be provided by a roadway capable of handling two way traffic (from a public street or public access to the parcel upon which the basin is constructed).

B. Access shall be maintained under all weather conditions.

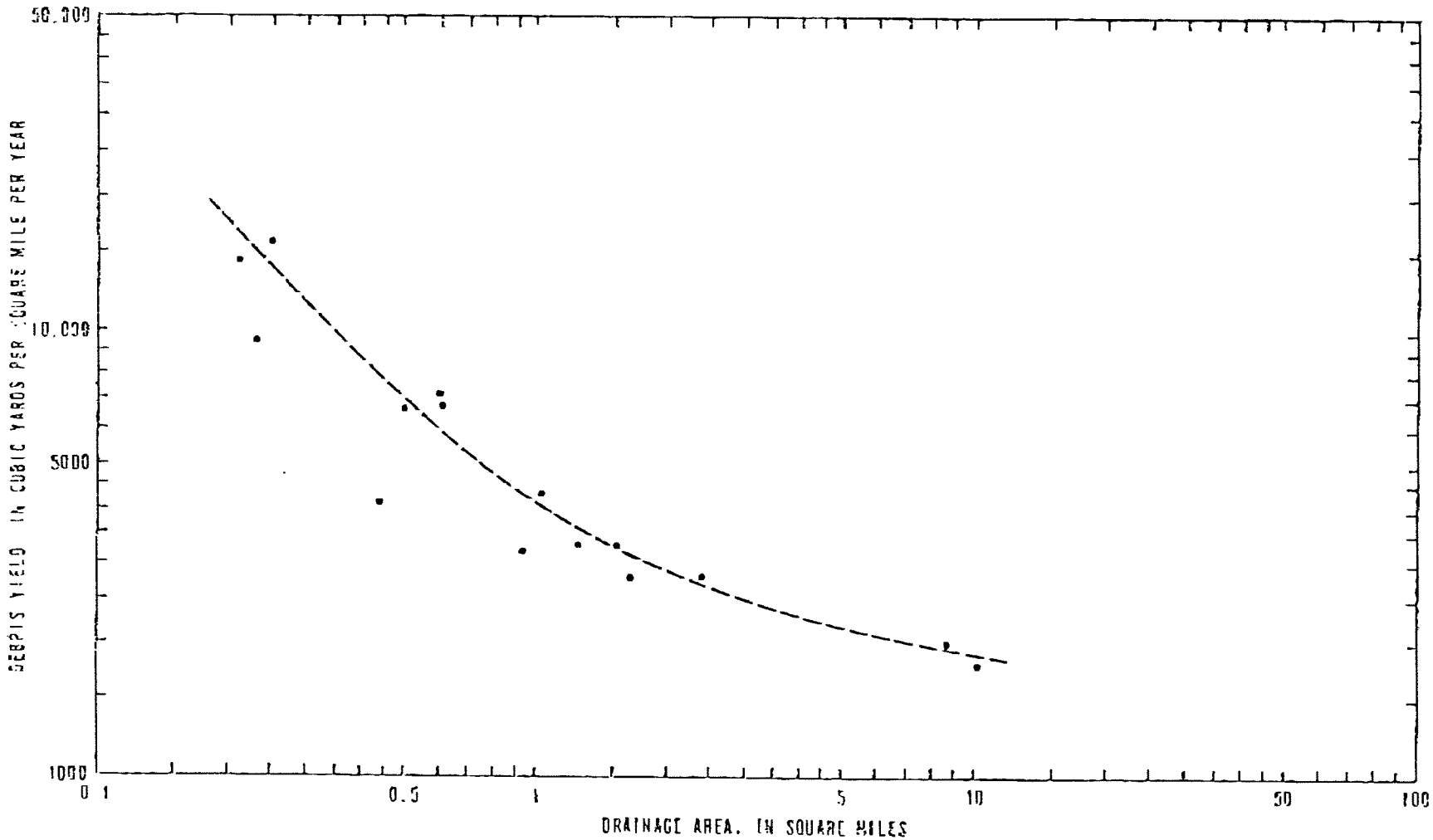

FIGURE 1 .--Long-term sediment yields at selected sites in Los Angeles County, California.

C. A 15-foot wide roadway shall be provided along the top of embankment, across the spillway and around the basin. The intent of this criteria is to have continuous access around, and to, the basin for maintenance purposes. Under certain circumstances where it can be shown the recommended top width is not necessary for structural safety and maintenance, the criteria may be modified. Approval will be required by both the Land Management Department and the Flood Control District.

1. If access across the spillway is not provided minimum 40' X 60' turn arounds shall be provided on both sides of the spillway.

2. If there exists adequate access for maintenance, this requirement may be amended for local, temporary or joint use basins.

D. Access ramps shall be provided to the basin floor.

1. Minimum of one - 15 foot wide ramp for local basins.
2. Minimum of two - 15 foot wide ramps for regional basins.

E. The <u>maximum</u> roadway or access ramp slope shall be 10%.

F. The <u>minimum</u> access and roadway inside turning radius shall be 35 feet.

X. Fencing

A. All basins shall be fenced with 6-foot chain link fencing per Cal Trans standards or other approved barrier unless otherwise approved by the Land Management Department and the Flood Control District. Joint use basin fencing will be site specific <u>and</u> must meet the needs of all agencies utilizing the basin.

B. All regional basin chain link fencing shall have a 1 foot wide painted horizontal orange stripe at the mid height of the fence.

C. Access to the basins shall be gated and locked.

XI. Rights-of-Way

A. Sufficient rights-of-way shall be provided for the construction and economical maintenance of the basin(s), (including all fill and cut slopes) and shall include sufficient area to provide for an access road from a dedicated public street to the basin.

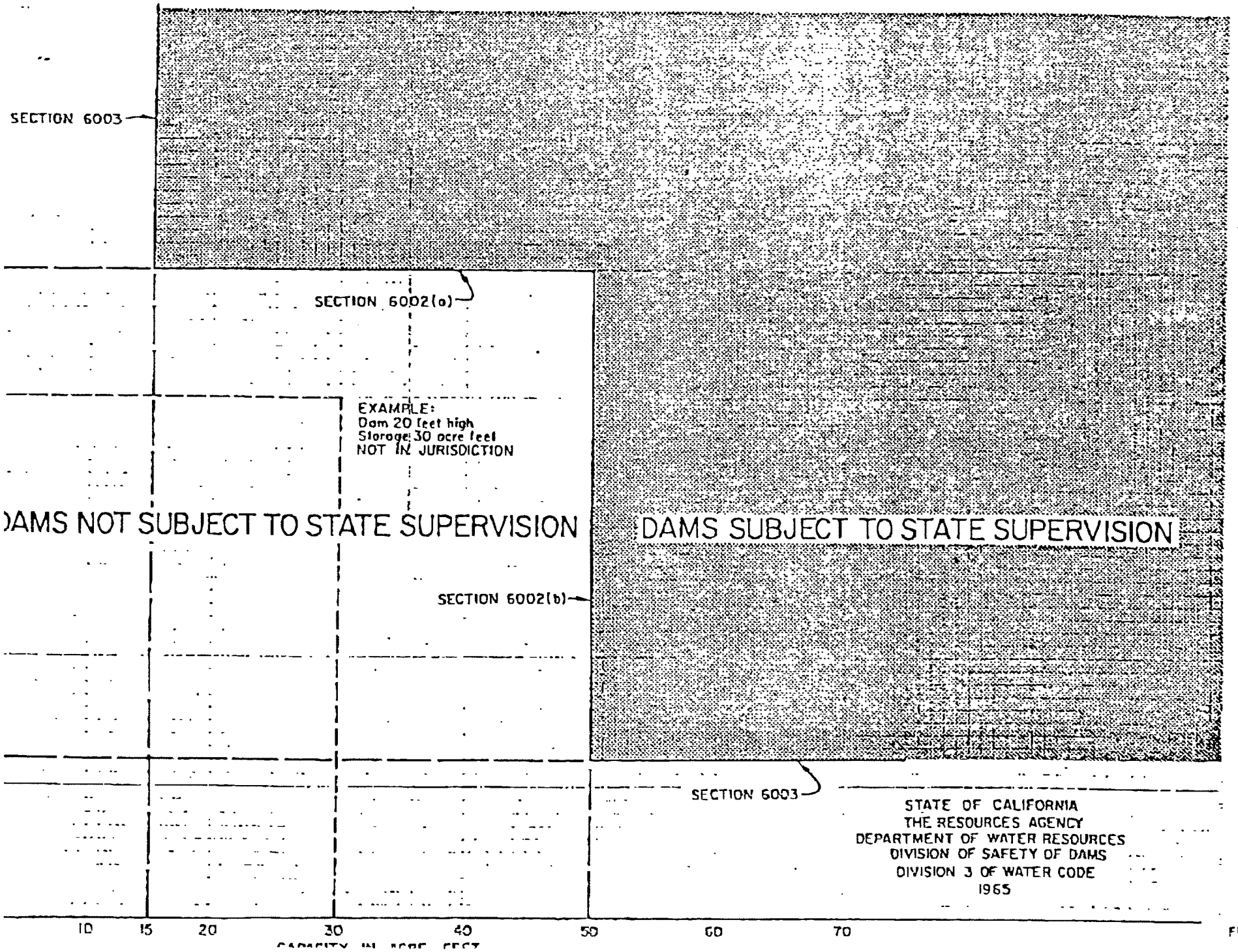
SECTION 6003
SECTION 6002(a)
EXAMPLE:
Dam 20 feet high
Storage 30 acre feet
NOT IN JURISDICTION
DAMS NOT SUBJECT TO STATE SUPERVISION
DAMS SUBJECT TO STATE SUPERVISION
SECTION 6002(b)
SECTION 6003
STATE OF CALIFORNIA
THE RESOURCES AGENCY
DEPARTMENT OF WATER RESOURCES
DIVISION OF SAFETY OF DAMS
DIVISION 3 OF WATER CODE
1965
10
15
20
30
40
50
60
70

FIG. 2

B. Regional basins shall be dedicated to the District in fee title.

C. Local basins shall be covered by an adequate San Bernardino County Drainage Easement.

XII. References to be Used in Design.

"A New Method of Estimating Debris - Storage Requirements for Debris Basins," Tatum, U.S. Army Engineer District, Los Angeles, CA, 1963

"Design of Small Dams", U.S. Bureau of Reclamation, 1977

"Handbook of Hydraulics", King and Brater, McGraw Hill Book Company, 1954

"Los Angeles County Flood Control Manual - Debris Dams and Basin", Los Angeles County Flood Control District

"Open-Channel Hydraulics", Ven Te Chow, Ph.d., 1959

"San Bernardino County Hydrology Manual", San Bernardino County, May 1983

"San Bernardino County Standards and Specification", San Bernardino County Department of Transmportation/Flood Control/Airports

INTEROFFICE MEMO

1853

County of San Bernardino

DATE September 4, 1987 PHONE 2515

FROM ROBERT W. CORCHERO, Chief
Water Resources Division

TO CHARLES L. LAIRD, Acting Director
Transportation/Flood Control File: 1(FC)-53

SUBJECT SAN BERNARDINO COUNTY DETENTION BASIN DESIGN CRITERIA

As requested the subject criteria was reviewed with respect to the determination of pre-development peak flow rates. According to the existing criteria the County can be 85% confident that the calculated peak flow rate will equal or exceed the peak flow rate at a given concentration point if adequate streamflow data was available. Therefore, the County can only be about 15% confident a detention basin outflow will not adversely affect downstream properties (not considering erosion).

The County should be at least 50% confident a detention basin outflow will not adversely impact properties downstream of the basin. Based on the calibration study of the county's hydrology method the input parameters (procedures) described in the Manual should be modified as follows:

a) 10 year peak flow rates should be calculated using 5-year rainfall,

b) 25-year peak flow rates should be calculated using 10-year rainfall, and

c) 100-year peak flow rates should be calculated using 25-year rainfall and AMC II.

If these design parameters are used for determining the pre-development peak flow rates, the basin outflow metered to 90% of these calculated pre-development peak flow rates and the post-development peak flow rates to the basin calculated in accordance with County Hydrology Manual, the County will be over 50% confident the resulting basin design will not adversely affect adjacent or downstream properties (not considering erosion).

The desired confidence level for detention basin outflow is a policy decision. Once the desired confidence level is determined the required input rainfall amounts can be developed to calculate the peak flow rate at the corresponding confidence level. I have discussed this policy issue with John Pederson of the U.S. Army Corps of Engineers, Ron Moore of the Soil Conservation Service and Al Nessinger of Orange County. Al Nessinger pointed out by using basin inflow hydrographs based on a 85% confidence level

and by creating adequate storage to reduce the peak flow rate from the basin to 90% of pre-development condition based on a 50% confidence level, the resulting confidence level that downstream conditions have not changed will be greater than 50%. Also, the rainfall pattern used in the hydrograph method was chosen to be the most severe test on basin design. When these facts are combined with criteria of using multi-day storms, the resulting basin design should be adequate to ensure downstream properties will not be subject to increased peak flow rates. Ron Moore felt the revised criteria better fit the actual pre-development conditions in the field. John Pederson and Al Nessigner both felt the criteria should be tested against actual occurrences in gaged watershed. Attached is page 2 of the design criteria with the proposed changes shown in bold type.

Should you have any questions, please call.

RWC:mjs
Attachment

cc: Ken Miller

II. Basin Capacity and Outlet Drain

A. When a basin (regional, local, temporary or joint use) is to be used to mitigate downstream impacts due to increased flows generated by a development, the basin capacity and outlet size shall be such that the post-development peak flow rate generated by the site shall be less than or equal to 90% of the pre-development peak flow rate from the site for all frequency storms up to and including 100-year (i.e.) the peak 2 year post-development flow rate is equal to or less than 90% of the peak 2 year pre-development flow rate from the site and etc. for all frequency storm events through 100 year).

1. Only 2, 10, 25 and 100-year storms need to be analyzed.

2. Post-development peak flow rates shall be calculated in accordance with the "San Bernardino County Hydrology Manual".

3. Pre-development peak flow rates shall be calculated in accordance with the "San Bernardino County Hydrology Manual" with the following exceptions.

   a) 10-year peak flow rates shall be calculated using 5-year rainfall.

   b) 25-year peak flow rates shall be calculated using 10-year rainfall.

   c) 100-year peak flow rates shall be calculated using 25-year rainfall and AMC-II.

4. Additional studies shall be submitted where there exists more than one basin in the drainage area under review. The studies shall address the timing of the peak flow rates from the basins to ensure downstream flow rates are not increased.