Appendix I

BAAQMD Authority, Engineering Evaluation Report (Jul. 7, 2010)

Engineering Evaluation Report

Xeres Ventures LLC, P#18801
535 Reed Street, Santa Clara
Application #17020

I. Background

Xeres Ventures LLC ("Applicant") has applied for Authorities to Construct and Permits to Operate 32 low usage diesel-fired internal combustion engines, 3,353 bhp each. This equipment will be used to support a proposed data center to be located at 535 Reed Street in Santa Clara (the "facility"). The data center will also require use of 4 natural gas-fired boilers, 2 cooling water towers to provide chilled water for mechanical cooling of the data center equipment, and 4 underground diesel fuel tanks.[1]

The data center will be operated on regular electric power from the local electrical utility. However, a data center requires high power reliability and power quality to maintain continuous operation of the data center servers and associated space conditioning systems to avoid damaging the servers and/or corrupting the data and software stored on the servers. To meet these particular power requirements, the Applicant has proposed using the 32 diesel engine-generators as a redundant uninterruptable power supply to provide back-up power in the event of electrical disturbances or full loss of electric power. According to the Applicant, the size and power needs of the facility make it impractical to use a battery bank as back-up power. Natural gas engine-generators are also not a viable option, since natural gas cannot be supplied in sufficient capacity to power the number of engine-generators required and ample back-up fuel storage is infeasible.

The proposed engine-generators will provide back-up power to the data center when a problem in the regular power supply is detected. The problem may be limited to a momentary disruption or may develop into a full loss of regular power supply. As soon as a problem is detected, the system will bring the engine-generators online. Although the Applicant initially proposed that the engine-generators also be used for "anticipatory outages," *i.e.*, brought online when problems with the regular electric power supply were expected, but had not yet been detected (the cited example was start-up of the engine-generators during or in anticipation of lightning storms to avoid any voltage disturbances that the electrical grid may experience during such storms), the Applicant has since confirmed that no anticipatory use of the engine-generators will occur at this site. The engine-generators will only be used to power the data center in the event of failure (momentary or sustained) of the regular power supply or during other emergency situations, as specified in District Regulation 9, Rule 8. Based on this usage, the proposed engine-generators meet the definition of emergency generators under District Regulation 9, Rule 8.

To address concerns raised by the California Energy Commission (CEC) regarding the CEC's jurisdiction over this project, the Applicant has also agreed to construct the proposed project in two phases, with half of the engine-generators being installed in the first phase and the other half to be installed only after the CEC's authority over the project has been resolved. However, for purposes of this evaluation, the District has considered all 32 engines as a single project. The sources considered under this evaluation include:

---

[1] Although at one time the Applicant had also indicated that the project might also require a small diesel-fuelled fire pump engine, it has since been determined that a diesel fire pump engine is not required and will not be used.

(32) Emergency Diesel-fired Internal Combustion Engine-Generators, Model Year 2010 Detroit Diesel MTU 16V4000G83, 3353 bhp each
(4) Natural Gas-fired Boilers, Pennant PNCH 1750, 1.75 MMBtu/hr each
(4) Underground Diesel Storage Tanks, 50,000 gallons each
(2) Cooling Towers, Recirculation Rate 194,400 gal/hour each

II. Overview of Emission Calculations: Methodology, Data and Assumptions

A. Calculating Emissions from Diesel Engine-Generators

In California, diesel engines are required to meet emission standards specified by the California Air Resources Board. These emission standards (Tier standards) apply to a particular engine class based upon the manufactured model year and a defined output capacity range. The Tier standard for each pollutant is expressed in the form of a weighted average of the emissions measured at 5 different operating loads, as defined in the ISO 8178 D-2 test protocol. The proposed engine-generators have been certified to meet the applicable Tier 2 standards.

When calculating emissions from a proposed project, the District uses an iterative approach, beginning with a conservative standard estimate of emissions that is expected to be greater than the actual emissions from the project. In many cases, this first estimate of emissions is based on EPA's AP-42 emission factors. For diesel generators, since the units have been certified by the state to meet the applicable Tier standard, the standard first estimate of discretionary emissions is based upon the certified ISO 8178 D-2 test cycle emission rates, combined with an assumed operation at 100% load for the maximum number of hours allowed for non-emergency use. Since the certified ISO 8178 D-2 emissions actually represent a combination of emissions at 10%, 25%, 50%, 75%, and 100% operating loads, multiplying the ISO 8178 D-2 emission factors by 100% load overestimates emissions.

If the emissions based on this first estimate comply with all applicable emission standards, no further review or refinement is necessary. If the estimated emissions exceed one or more emission standards, then the emission estimate is refined to more closely match the actual expected emissions from the project. Since the engine emissions vary with operating load for each pollutant, the emissions measured for a particular load, multiplied by operation hours at that output, will be less than the conservative first emission estimates based on the ISO 8178 D-2 emission rates. If the refined estimate still exceeds one or more emission standards, then the allowable operating conditions (maximum permitted hours and other conditions) are adjusted until the emissions standards are met.

As discussed below, in this case, the District found that refined calculations were necessary for diesel particulate matter and nitrogen oxides. In addition, the Applicant needed to accept certain permit conditions to bring the project emissions within approvable levels.

1. Diesel Particulate Matter

Here, the Applicant's initial project description proposed 100 hours of discretionary use per engine-generator per year. For purposes of its evaluation, however, the District calculated individual source emissions based on 50 hours of discretionary operation per engine-generator per year (rather than 100), which is the maximum level allowed under state regulations if no other regulations dictate a lower limit (*See* Air Toxic Control Measure for Stationary Compression Ignition Engines, 17 California Code of

Regulations, Section 93115.6(a)(3)(C)). With its application, the Applicant provided a detailed breakdown of projected annual use that was based on its operation of a similar facility in another jurisdiction. This breakdown showed actual annual discretionary use of approximately 38 hours per engine-generator, which indicates that 50 hours of discretionary operation is reasonable. As discussed below (*see* Part IV(G), *infra*), however, the health risk from the project exceeded approvable levels under District Regulation 2, Rule 5, based on the initial estimate of 50 hours of discretionary operation and the ISO 8178 D-2 particulate matter (PM) emission factor. Therefore, refinement of the emission calculations for PM was necessary. The PM emission rates for the range of operating loads were supplied by the manufacturer and have been summarized in Table 1.

Table 1
Engine-Generator Diesel PM Emissions

Engine Load %	kW	**Emission Factor** g/kW-hr	**Emissions** lbs/hr
100	2500	0.065	0.36
75	1875	0.092	0.38
50	1250	0.185	0.51
25	625	0.382	0.53

As shown in Table 1, the maximum hourly diesel PM emissions result from operation of these sources at 25% load. Accordingly, the refined PM emissions from this project have been calculated assuming operation at 25% load. The Applicant has also agreed to accept permit conditions that include a combined annual limit of 700 hours on discretionary operation of all engine-generators. The PM emissions resulting from operation at 25% load and the combined annual usage limit of 700 hours for all 32 engines are summarized in Table 5. Together, the permit conditions relating to maximum discretionary use per engine-generator (50 hours per year) and maximum combined discretionary usage for all engine-generators (700 hours per year) brought diesel PM emissions and the project health risk to within approvable levels.

2. *Nitrogen Oxides*

The project will include use of selective catalytic reduction (SCR) to control nitrogen oxide (NOx) emissions from the engine-generators. Each engine-generator set will be equipped with a Steuler SCR system, including the SCR catalyst bed, urea storage and injection, and associated control and monitoring equipment. SCR reduces NOx emissions by injecting ammonia into the combustion flue gas, which reacts with the NOx to form water and nitrogen. For this project, urea will be used as the ammonia source. The reduction of NOx to water and nitrogen occurs over the catalyst bed, which is effective in the operating range of 500 to 950 degrees F. As stated in EPA's AP-42 Compilation of Air Pollutant Emission Factors, 5th Edition, Volume I, Stationary Point and Area Sources, Chapter 3.4, Large Stationary Diesel and All Stationary Dual-fuel Engines, Table 3.4-5, SCR is expected to achieve an 80-95% reduction by weight in this temperature range; an estimated 90% control efficiency has been used for this evaluation. A start-up source test will be required to demonstrate compliance with this control efficiency.

The emissions and modeling submitted by the Applicant assumed an average 65% reduction in NOx emissions, by weight, due to SCR abatement, based on a projection that SCR would be effective during 73% of the projected discretionary operation. However, review of the described types of maintenance

tests indicated that the majority of the maintenance and testing scenarios are projected to occur at low loads and/or for short duration. For the majority of these tests, the exhaust temperatures generated would not be adequate to reach the minimum 500° F temperature required for the catalyst in the SCR system to become effective. In addition, the NO2 modeling submitted with the application indicated a potential exceedance of the state 1-hour ambient air quality standard. Therefore, refined modeling of the NOx emissions from the project was necessary.

The Applicant also proposed use of a Load Bank, which will allow full load start-up of an engine during maintenance and testing at reduced load in order to achieve the minimum temperature required by the SCR catalyst. To evaluate which scenarios would result in an overall reduction in NOx emissions through use of the Load Bank, the following analysis was performed. Based on the expected 90% abatement efficiency once the SCR system is operational and the load-based emission data from the engine manufacturer, the hourly NOx emission estimates for the engine-generators at various loads, both including SCR control and without SCR control, were calculated and are summarized in Table 2:

Table 2
Engine-Generator Uncontrolled and Controlled NOx Emissions

Engine Load		**Emission Factor**	**Uncontrolled Emissions**	**Controlled Emissions**
%	kW	g/kW-hr	lbs/hr	lbs/hr
100	2500	7.174	39.5	3.95
75	1875	5.631	23.3	2.33
50	1250	5.175	14.3	1.43
25	625	4.747	6.54	0.65

The start-up periods for the SCR system with and without the Load Bank have been estimated and summarized in Table 3 below, based on the exhaust temperature profile at varying loads supplied by the manufacturer. This data and the controlled and uncontrolled NOx emission data from Table 2 have been used to calculate start-up emissions for the first hour of operation at each load level.

First hour start-up emissions without the Load Bank are equivalent to the uncontrolled emissions for the length of time it takes for the minimum SCR temperature to be reached, plus controlled emissions for the remainder of the hour. Use of the Load Bank allows initial operation of an engine-generator at 100% load, thus shortening the SCR startup period to 15 minutes. Therefore, when the Load Bank is used, the start-up emissions for the first hour of operation are equivalent to uncontrolled emissions at 100% load for the first 15 minutes of operation, plus the controlled emissions for the remainder of the hour at the test load. The first hour start-up emissions with and without the Load Bank are summarized in Table 3.

Of the types of maintenance tests projected, many are expected to last for 30 minutes or less; these short duration tests will occur at up to 75% load. The emissions resulting from a 30 minute test has been calculated in the same manner for each load, based on uncontrolled emissions until the SCR minimum temperature is reached and controlled emissions for the remainder of the test. These short duration test emissions have also been summarized in Table 3 below.

Table 3
Engine-Generator Controlled NOx Emissions With and Without Load Bank

Engine Load	SCR Startup Duration (min)		First Hour Start-up Emissions (lbs/hr)		30 Minute Test Emissions (lbs/test)	
	w/o Load Bank	w/Load Bank	w/o Load Bank	w/Load Bank	w/o Load Bank	w/Load Bank
100%	15	15	12.9	12.9	--	--
75%	30	15	12.8	11.6	11.6	11.0
50%	60	15	14.2	11.0	7.13	10.6
25%	60+	15	6.53	10.4	3.27	10.2

As Table 3 shows, use of the Load Bank for a test lasting lasting 1 hour at 25% load would actually result in higher emissions than performing the test without use of the Load Bank. For all short duration tests (less than 30 minutes), use of the Load Bank would also result in similar or higher emissions than testing without use of the Load Bank. The District permit will therefore require use of the Load Bank only for tests lasting longer than 30 minutes and for test loads of 50% or more. This will reduce the emissions from operation of the engine-generators during testing and maintenance. The Load Bank will not be used under emergency conditions or during the one-time commissioning activities, as commissioning is intended to ascertain that the sources will operate as necessary during emergency use and therefore must simulate emergency conditions.

The maximum daily NOx emissions correspond to start-up emissions without the Load Bank, and abated emissions for the remainder of the day after the minimum SCR temperature is reached. Since NOx emissions increase with increasing load, the highest emissions under this scenario occur during operation at 100% load, so the maximum daily NOx emission estimates have been based on 100% load. The annual discretionary NOx emissions from the project have been based on the highest hourly emission rate resulting from discretionary operation. The highest emission rate from discretionary testing results from a 30 minute test at 75% load (11.6 pounds in 30 minutes). So, maximum annual NOx emissions from the project have been based on the emission rate for a 30 minute test at 75% load (23.2 pounds per hour) for 700 hours per year.

3. *Other Criteria Pollutants*

The emission calculations for precursor organic compounds (POC) and carbon monoxide (CO) were based on the standard certified ISO 8178 D-2 cycle emission factors for these engines combined with assumed operation at 100% load. The calculation of sulfur dioxide (SO2) emissions was based on the maximum fuel usage rate at 100% load, the maximum sulfur content allowed in California diesel, and an assumed 100% conversion of fuel sulfur to SO2.

Table 4
Engine-Generator CO, POC, and SO2 Emissions

Pollutant	Emission Factor g/kW-hr	Emissions lbs/hr/engine
CO	1.900	10.473
POC	0.295	1.626
SO2	0.006	0.035

C. Calculating Emissions from Cooling Towers - Exempt per Regulation 2, Rule 1, Section 128.4

Based on the source of the water to be processed in the cooling towers, the cooling towers qualify for permit exemption under District Regulation 2, Rule 1, Section 128.4,

> "*water cooling towers and water cooling ponds not used for evaporative cooling of process water, or not used for evaporative cooling of water from barometric jets or from barometric condensers.*"

These cooling towers will be using either recycled/reclaimed water or potable water from the City of Santa Clara Water Pollution Control Plant ("Santa Clara WPCP"). Therefore, since the towers will not be using process water or water from barometric jets or condensers, the permit exemption in District Rule 2-1-128.4 applies if the cooling tower emissions and project emissions do not exceed the emission levels in the backstop provisions listed above (see discussion of boiler emissions in Part II.B, above).

The particulate and organic emissions from the proposed cooling towers were calculated based on a 2010 analysis of the water content that was provided by the Santa Clara WPCP and an assumption of continuous operation, using a drift rate of 0.01%. The resulting emissions do not exceed any of specified risk screening trigger levels, therefore these cooling towers are exempt from the District's permit requirements under District Regulation 2, Rule 1, Section 128.4.

D. Calculating Emissions from Diesel Storage Tanks - Exempt per Regulation 2, Rule 1, Section 123.3.2

The diesel storage tanks qualify for permit exemption under District Regulation 2, Rule 1, Section 123.3.2,

> "*Containers, reservoirs, tanks or loading equipment used exclusively for: storage or loading of organic liquids or mixtures containing organic liquids, where the initial boiling point of the organics is greater than 302 degreesF and exceeds the actual storage temperature by at least 180 degreesF.*"

The initial boiling point of diesel fuel is 372° F, which is more than 180° F above the storage temperature in these underground tanks. Therefore, the permit exemption in Rule 2-1-123.3.2 applies if the emissions do not exceed the emission levels in the backstop provisions listed above (see discussion of boiler emissions in Part II.B, above). The organic emissions from the diesel storage tanks were calculated using EPA's Tanks 4.0 program. The tank emissions of 11 pounds of organic compounds per year do not exceed any of specified emission levels; therefore, these storage tanks are exempt from the District's permit requirements under District Regulation 2, Rule 1, Section 123.3.2.

III. Cumulative Increase and Facility-Wide Potential to Emit

For each new or modified permitted source, the District tracks cumulative emission increases ("cumulative increase") due to permitting of new and modified sources at a facility. As this facility is new with no pre-existing sources, there are no existing (current) emissions of any pollutants from the facility. Accordingly, the emissions resulting from discretionary use of the 32 diesel engine-generators for a total of 700 hours per year will be entered as the emission increase for this project as shown in Table 5 below. Hours of emergency operation are not included in the emissions charged to this project.

4. Diesel Engine Emission Summary

Worst-case daily emissions from each source were based on continuous operation for 24 hours. Annual emissions from discretionary use of the engine-generators were based upon the permit limit of 700 hours per year of combined operation for all 32 engine-generators for regular maintenance and testing. The potential to emit for the facility was based on combined annual operation of the engine-generators for 8,000 hours for emergency and all other purposes. The maximum daily emissions for each diesel engine-generator are summarized in Table 5 below, as are the maximum discretionary emissions and maximum potential emissions from all 32 engine-generators.

Table 5
Maximum Daily and Annual Engine-Generator Emissions

Pollutant	Maximum Daily Emissions, lbs/day/src	Combined Discretionary Emissions, tpy	Combined Potential to Emit, tpy
PM10	12.6	0.184	3.4
POC	39.0	0.569	6.7
NOx	103.8	8.147	94.6
SO2	0.8	0.012	0.16
CO	251.4	3.666	44.4

B. Calculating Emissions from Natural Gas-Fired Boilers - Exempt per Regulation 2, Rule 1, Section 114.1.2

Based on heat input capacity, the natural gas-fired boilers qualify for permit exemption under District Regulation 2, Rule 1, Section 114.1.2,

> "*Boilers, Heaters, Steam Generators, Duct Burners, and Similar Combustion Equipment: ... Any of the above equipment with less than 10 million Btu/hr rated heat input if fired exclusively with natural gas ...*"

The proposed boilers have a maximum rated heat input of 1.75 million Btu/hr, each, and are therefore exempt from District permit requirements if the source emissions do not exceed the backstop provisions as follows:

- 5 tons per year of any regulated air pollutant (District Rule 2-1-319);
- Any of the hazardous substance levels in Rule 2-1-318;
- Any of the toxics risk screening trigger levels in Table 2-5-1 of District Regulation 2, Rule 5; and;

if the project emissions do not meet or exceed the following:

- 2.5 tons per year or more of a single hazardous air pollutant, or 6.35 tons per year of any combination of hazardous air pollutants (Rule 2-1-316.2).

The emissions from the boilers were calculated based on the standard emission factors from EPA's AP42, Compilation of Air Pollutant Emission Factors, Volume 1, Chapter 1.4, Natural Gas Combustion, Tables 1.4-1 and 1.4-2, dated 7/98, assuming continuous operation. The worst-case emissions do not exceed any of the emission levels specified above; therefore, the boilers are exempt from the District's permit requirements under District Regulation 2, Rule 1, Section 114.1.2.

Table 6
Cumulative Emission Increases for Plant #18801

Pollutant	Current, tpy	Project, tpy	New, tpy
PM10	0	0.184	0.184
POC	0	0.569	0.569
NOx	0	8.147	8.147
SO2	0	0.012	0.012
CO	0	3.666	3.666

The total facility-wide potential to emit determination is necessary for determining applicability of PSD and Title V. For these purposes, the facility-wide potential to emit includes emissions from emergency operation of the engines, plus the exempt equipment. The total emissions potential for this facility is summarized in Table 7 based on limitations discussed in Section IV.H.

Table 7
Facility-Wide Potential to Emit for Plant #18801

Sources	NOx	CO	POC	PM10	SO2
Engines	93.11	41.89	6.50	2.11	0.14
Boilers	1.50	2.53	0.17	0.23	0.02
Cooling Towers	--	--	0.01	1.10	--
Diesel Tanks	--	--	0.01	--	--
Total for Site	94.6	44.4	6.7	3.4	0.2

IV. Compliance Determination: Discussion of Compliance with Laws and Regulations

Using the methodology, data and assumptions discussed above, the District evaluated the project to determine compliance with all applicable and potentially applicable laws and regulations as discussed below.

A. District Regulation 1, "General Provisions and Definitions"

All sources are subject to District Regulation 1, Section 301, which prohibits discharge of air contaminants resulting in public nuisance. This project is not expected to be a source of public nuisance as the emissions from the diesel engine-generators are being controlled to BACT/TBACT levels (see discussion in Part IV.D, below), and the exempt boilers will be fuelled with clean burning natural gas. The exempt cooling towers and diesel storage tanks will not be significant sources of emissions and are therefore not expected to be potential sources of public nuisance.

B. District Regulation 2, Rule 1, California Environmental Quality Act (CEQA) Requirements

District Regulation 2, Rule 1, Section 310 requires all proposed new and modified sources that are subject to District permit requirements to be reviewed in accordance with the California Environmental

Quality Act (CEQA) requirements, except for ministerial projects or projects exempt from CEQA under District Rule 2-1-312. For this project, the City of Santa Clara ("City") was the Lead Agency for purposes of the CEQA analysis. The District, as an agency with permitting authority over this project, is a responsible agency.

The City issued an Initial Study in February 2008. The Initial Study concluded that the project would result in less than significant long-term regional and local air quality impacts, and that short-term air quality impacts associated with dust from construction could be mitigated to less than significant levels. Based on these findings, the City adopted a Mitigated Negative Declaration on March 5, 2008.

Typically, the District, as a responsible agency, would be notified of the availability of the Initial Study for comment, but in this case it was not. The District therefore did not have the opportunity to submit comments on the City's findings regarding the projected air quality impacts for the project. Moreover, the District's analysis during its evaluation of this Application indicated that emissions from the project as initially proposed (and described in the Initial Study), may result in significant impacts. In response, the Applicant has agreed to revise the project description in various ways, which are discussed below. The District's further analysis shows that no significant air quality impacts will result from the revised project.

1. Health Risk

The engine-generators are sources of diesel particulate matter emissions. Diesel particulate is a toxic air contaminant (TAC) which has a particularly high risk factor and is therefore of significant concern. The project description in the Initial Study included proposed unabated operation of 32 diesel-fired engine-generators for up to 100 hours of discretionary use per year per engine-generator. The City concluded that diesel PM emissions from such operation would result in "less than significant" impacts, but did not include a risk analysis or other technical analysis to support its finding.

Meanwhile, the District's initial health risk analysis revealed that operation of the engine-generators, even at lower levels than originally proposed—50 hours per year per engine-generator, as opposed to 100—would result in a significant increase in cancer risk to nearby residents and workers. The health risk posed by this project would have exceeded the CEQA significance threshold and the District's maximum approvable project risk level, as specified in District Regulation 2, Rule 5. Therefore, based on unabated diesel particulate emissions from the engine-generators for 50 hours per year per engine-generator, the project was subject to denial of District permits.

In light of these results, the Applicant has proposed an additional limitation on the *combined* discretionary operation of all 32 engine-generators, which will limit the increase in health risk from this project. A limit of 700 hours of annual combined operation for all 32 engines will apply to the facility, in addition to the maximum per engine limit of 50 hours of operation per year. The combined limit is equivalent to less than 22 hours of discretionary use per engine, on average. The Applicant has indicated that this facility can be operated in compliance with this combined limit on discretionary usage. The combined 700 hour limit has been further segregated into 3 hourly shifts per day, as discussed in more detail in Part IV.G, below (see discussion regarding the Health Risk Assessment, District Regulation 2, Rule 5). Based on this revised project proposal, the resulting project risk has been reduced to less than the CEQA significance thresholds and to less than the maximum level allowed under Regulation 2, Rule 5.

2. *State and National Ambient Air Quality Standards for CO and NO2*

Pursuant to Appendix G of the state CEQA Guidelines, the District's analysis of air quality impacts of a proposed project includes an examination into whether the project would "violate any air quality standard[.]"

The City's Initial Study for this project included modeling results provided by the Applicant that demonstrated compliance with the national ambient air quality standards (NAAQS) for carbon monoxide and nitrogen dioxide (NO2) that were in effect at the time that the Initial Study was published and the Mitigated Negative Declaration was adopted (in February and March 2008, respectively).

However, the Initial Study failed to discuss whether emissions would comply with the state 1-hour ambient air quality standard for NO2. Meanwhile, the modeling results that were attached to the Initial Study predicted exceedances of the state 1-hour standard. Further, after the City published the Initial Study and adopted the Mitigated Negative Declaration, but before the District completed its evaluation of this project, the U.S. EPA adopted a national 1-hour NO2 ambient air quality standard; the new federal standard became effective on April 12, 2010.

To address these gaps in the analysis, the Applicant has completed refined NO2 modeling, the results of which are discussed below.

a) California 1-hour NO2 AAQS

The modeling results that were attached to the Initial Study estimated ambient NO2 concentrations based on NOx emissions from emergency operation of all 32 engine-generators from an assumed scenario with loads ranging between 1100 to 1700 kW. An estimated overall NOx control of 65% was also assumed, to allow for warm up and cool down modes during which the SCR system is not operational. The modeling was performed using a conservative screening-level approach with the SCREEN3 dispersion model, which includes the simplification that all emissions are released through a single stack. This model predicted a worst case 1-hour NO2 concentration of 1,276 $\mu g/m^3$, which would exceed the state 1-hour NO2 standard of 338 $\mu g/m^3$.

To address this predicted exceedance, the Applicant has performed a refined modeling analysis using the AERMOD air dispersion model to more accurately predict maximum 1-hour ambient air concentrations and included analysis of each operating scenario with use of the Load Bank for the scenarios where the Load Bank would result in a reduction of NO2 emissions. The AERMOD model is capable of calculating ambient concentrations resulting from emissions from multiple sources (stacks) and can factor in more accurate meteorological and terrain data. The scenarios considered in the AERMOD analysis include discretionary operation of one engine-generator at a time, commissioning activities for 16 sources at one time, as well as operation of all 32 engine-generators at this facility under emergency conditions.

Discretionary operation (maintenance and testing) will be limited to only one engine-generator at a time, and the discretionary modes evaluated include the following:

- 30 minute test runs at 25/50/75% load
- Uncontrolled start-up at 25% load
- Load-banked start-up at 50/75/100% load
- Controlled operation including SCR abatement at 25/50/75/100% load

Commissioning of the sources will occur after installation and is a one time event, however commissioning scenarios were also evaluated in this modeling analysis. During commissioning of the facility, as many as 16 engine-generators will be operated over a full range of loads to simulate emergency operation. Since uncontrolled start-ups (without use of the Load Bank) may occur under emergency conditions, these uncontrolled start-ups must be tested during commissioning. The commissioning scenarios evaluated include the following:

- Emergency (uncontrolled) start-ups at 25/50/75/100% loads
- Controlled operation including SCR abatement at 25/50/75/100% loads

Under emergency conditions, all 32 engine-generators are expected to operate between 50 and 75% load. Full load operation of all engines is not expected as the project was designed so that if one or more engines does not function, the remaining sources can provide the minimum necessary power for the data center. Operation of all engines at only 25% load is also not expected based on the facility's minimum load requirements. The emergency scenarios evaluated in the refined modeling analysis include the following:

- 30 minute emergency start-ups at 50/75% loads
- 1 hour emergency start-ups at 50/75% loads
- Emergency operation including SCR abatement at 50/75% loads

The refined modeling was based on the regulatory default model options as described below in the discussion on the Health Risk Screening Analysis for Regulation 2, Rule 5. In addition, the exponential decay option in the model was used to account for the reduced rate of NO2 formation from ozone-oxidized NO at nearby receptors as a result of insufficient time for the reaction to be driven to completion. This assumes adequate ozone is available to fully oxidize all NO, given sufficient reaction time and an NO half-life of 12 minutes. To quantify these assumptions, the model was run first assuming all NOx emissions form NO2. A second run was performed to include the exponential decay and half-life to estimate NO concentrations, and these results were adjusted by a standard ratio of NO to NOx of 90%. The calculated NO concentrations were then subtracted from the results of the first model run to calculate rate-limited NO2 concentrations on an hour-by-hour basis for each receptor in the model. These resulting hourly ambient concentrations were added to the corresponding background NO2 concentrations for each hour, from 2004 ambient data recorded at the San Jose-Jackson Street meteorological station.

Neither the discretionary operation nor the commissioning scenarios result in a modeled exceedance of the state 1-hour standard. The full emergency operation of all 32 engine-generators results in the highest ambient NO2 concentrations. The model predicts that the 30-minute emergency start-ups and fully abated emergency operation of all 32 engines (after the first hour of start-up) will also not result in exceedance of the state 1-hour standard, based on 90% reduction of emissions due to operation of the SCR abatement.

For the first full hour of emergency startup of all 32 engines, the model predicts maximum 1-hour NO2 concentrations of 366 $\mu g/m^3$ and 439 $\mu g/m^3$ corresponding to 75% load and 50% load of the engines, respectively. These values numerically exceed the state standard of 338 $\mu g/m^3$, however the model also calculates the frequency at which such a violation might occur based on the historical ambient data. If an emergency start-up occurred each hour of the year (8,760 times), the model indicates 205 possible exceedances if the engines were operating at 50% load and only 5 possible exceedances if the engines

were operating at 75% load. Therefore, the model predicts a statistical probability of an exceedance of the state 1-hour standard of less than 2.5% at 50% load and less than 0.06% at 75% load if an emergency start-up occurred every hour of the year.

Based on its operation of other data centers in other jurisdictions, the Applicant has indicated an expectation of 5 or fewer utility disturbances per year and 3 or fewer utility outages per year. If each of these 8 occurrences lasted an entire hour, the probability of an emergency start-up occurring in any given hour is less than 1 in a thousand (less than 0.1%). Combined with the results from the refined NO2 modeling, the probability of this emergency start-up coinciding with the meteorological conditions that would result in an exceedance of the state 1-hour standard is approximately 21 in a million for the 50% load scenario and less than 1 in a million for the 75% load scenario.

The District has verified and approved the methodology used in the refined modeling analysis. Since the proposed project includes abatement of NOx emissions with an SCR system and a Load Bank to ensure that the SCR system is operational to the maximum extent possible, there are no additional measures that can be required to further reduce NOx and NO2 emissions. The model shows that an exceedance of the state 1-hour NO2 standard during emergency operation is so unlikely that the District has concluded that an exceedance is not a reasonable possibility. The District has prepared an addendum to the Mitigated Negative Declaration, which further discusses this determination under CEQA.

b) Federal 1-hour NAAQS for NO2

The Applicant's refined NO2 modeling, described above, also indicates that the project will not result in a violation of the new 1-hour national ambient air quality standard for NO2, which is expressed as the 8th highest 1-hour concentration in any year, not to exceed 188 $\mu g/m^3$. Further discussion of this finding can also be found in the District's addendum to the Mitigated Negative Declaration.

C. District Regulation 2, Rule 1, Public Notice Requirements

The public notification requirements of District Regulation 2, Rule 1, Section 412 apply to new and modified sources that result in any increase in toxic air contaminant or hazardous air contaminant emissions at facilities located within 1,000 feet of the boundary of a K-12 school. The Applicant has reported no K-12 school within that radius of this facility, and the District's database confirms that the two closest K-12 schools are located slightly less than one mile from the facility, the closest being Scott Lane Elementary, which is approximately 3,800 feet from the facility. As a result, the public notice requirements of Section 2-1-412 do not apply.

D. District Regulation 2, Rule 2, Best Available Control Technology (BACT) Requirements

Per District Regulation 2, Rule 2, Section 301, Best Available Control Technology (BACT) requirements are triggered if maximum potential emissions from any new or modified source subject to District permit requirements are 10 lbs/day or more of particulate matter with aerodynamic diameter of 10 microns or less (PM10), precursor or non-precursor organic compounds (POC/NPOC), nitrogen oxides (NOx), sulfur dioxide (SO2), or carbon monoxide (CO).

As shown in Table 4, the maximum daily engine-generator emissions will exceed 10 lbs/day for PM10, POC, NOx, and CO. Once BACT review is triggered, permitting of a diesel engine is allowed only if a

gas-fuelled engine or electric motor is impractical, for example if the engine is used exclusively for emergency use during involuntary loss of power. For this project, the engines will be used to generate power under emergency conditions and for maintenance and testing purposes only. The Applicant has also indicated that the power needs and the practical aspects of fuel storage require use of diesel-fuelled engines. Diesel engines are therefore allowable for this project.

The BACT standards for emergency compression ignition engines greater than 50 hp are listed in the District's BACT Guidelines, Document 96.1.3, dated 4/13/2009 and have been summarized in Table 6 below. These emission standards apply to the certified ISO 8178 D-2 test cycle emissions, which are a weighted average of the emissions measured at 5 different loads (10%, 25%, 50%, 75%, and 100%). The proposed engines are 2010 model year, Tier 2 certified engines (see CARB Executive Order U-R-052-0014), and the ISO 8178 D-2 test cycle certified emissions for these engines have also been summarized in Table 8.

Table 8
BACT Standards for Emergency Compression Ignition Engines > 50 hp

Pollutant	BACT2	Tier 2 Standard	BACT1/ TBACT	Certified Emissions
PM10	0.15 g/bhp-hr or current Tier standard	0.15 g/bhp-hr	N/S	0.15 g/bhp-hr
POC and NOx	Current Tier standard	4.77 g/bhp-hr NMHC+NOx	N/S	4.40 g/bhp-hr NMHC+NOx
CO	2.75 g/bhp-hr or current Tier standard	2.61 g/bhp-hr	N/S	1.42 g/bhp-hr

The BACT Guidelines specify BACT2 is compliance with the listed emission standard or the current tier standard, whichever is more stringent. The engines are certified to meet the current Tier 2 standards for these pollutants as shown; therefore, BACT has been met. Note that although the proposed SCR system will reduce NOx emissions to less than the certified levels in Table 6, SCR control is not required as a BACT measure.

E. District Regulation 2, Rule 2, Emission Offsets

The offset requirements for precursor organic compounds and nitrogen oxides are defined in District Regulation 2, Rule 2, Section 302. Under Section 2-2-302, POC and NOx emission offsets are required for new or modified sources at a facility which emits or will be permitted to emit 10 tons per year or more, on a pollutant specific basis. If the facility emits or will be permitted to emit less than 35 tons of POC or NOx per year, the emission offsets are provided by the District's Small Facility Banking Account. The discretionary emissions from the engine-generators will be 0.57 tpy of POC and 8.15 tpy of NOx. As the POC and NOx emissions are less than 10 tons per year, POC and NOx emission offsets are not required.

The offset requirements for PM10 and SO2 are defined in District Regulation 2, Rule 2, Section 303. Emission offsets for PM10 and SO2 are required for any new or modified source of such emissions, if the source is located at a major facility and the post-project cumulative increase since April 5, 1991 exceeds

1.0 ton per year, on a pollutant specific basis. As this facility will not be a major facility (see discussion of District Regulation 2, Rule 6 below), PM10 and SO2 offsets are not required.

F. District Regulation 2, Rule 2, Prevention of Significant Deterioration (PSD) Requirements

The District's Prevention of Significant Deterioration (PSD) requirements are found in District Regulation 2, Rule 2, Sections 304, 305, and 306. Section 2-2-304 requires demonstration by modeling that project emissions will not interfere with attainment and maintenance of the national ambient air quality standard for sulfur dioxide and nitrogen dioxide and will not cause an exceedance of a PSD increment. Section 2-2-305 requires demonstration by modeling that project emissions will not interfere with attainment or maintenance of the carbon monoxide national ambient air quality standard, and Section 2-2-306 prohibits approval of a project that will result in net emission increases in excess of the limits specified. These requirements apply only to new major facilities and major modifications at major facilities. Since this facility will not be a major facility, the District's PSD requirements do not apply to this project.

As discussed under the section regarding CEQA above, the Applicant has submitted modeling that demonstrates the project will not result in an exceedance of the national ambient air quality standards for NO2, but this modeling was performed for the CEQA review process and not required by District Regulation 2, Rule 2.

G. District Regulation 2, Rule 5, Health Risk Assessment Requirements

The District's requirements concerning toxic air contaminant emissions are codified in Regulation 2, Rule 5, New Source Review of Toxic Air Contaminants. All TAC emissions from new and modified sources subject to District permit requirements are subject to review under this rule. A risk assessment is required if emissions of any individual TAC exceed either the acute or chronic emission thresholds defined in Table 2-5-1.

The engine-generators will burn diesel fuel and will emit diesel particulate matter (PM), which is a TAC. Diesel exhaust particulate matter is used as a surrogate for all TAC emissions from diesel-fuelled compression-ignition internal combustion engines. Per Regulation 2-5-111, the emissions from emergency engines resulting from emergency use, initial start-up testing, and emission testing required by the District are not subject to review under Regulation 2, Rule 5. Only the emissions resulting from reliability-related operation (maintenance and testing) of the proposed emergency diesel engine-generators are subject to review under this rule.

In addition to diesel particulate, the engine-generators will emit ammonia due to the SCR control of NOx emissions. The excess ammonia that passed through the process, unreacted, is emitted in the exhaust stream and is referred to as ammonia slip. Ammonia is also a TAC with both chronic and acute health effects, so the ammonia emissions from discretionary operation of the engines have been calculated on the attached spreadsheet and summarized below, based on an ammonia slip of 10 ppmv, dry at 3% oxygen, a standard expected outlet concentration resulting from SCR control.

The unabated diesel PM emissions were initially calculated based on the certified ISO 8178 D-2 cycle PM emission factor for the engine-generators and maximum discretionary use of 50 hours per year per source. Since the initial estimate of diesel PM emissions resulting from 50 hours of discretionary

operation of each engine-generators exceeded the chronic trigger level, a Health Risk Screening Analysis was required by Regulation 2, Rule 5, Section 401. The initial risk analysis was performed using the SCREEN3 air dispersion model and based on diesel emissions from discretionary operation of 1,600 hours per year for the project. The resulting risk exceeded the maximum approvable project cancer risk limit of 10 in one million defined by Regulation 2, Rule 5. As the District would be required to deny permits to the engine-generators based on this proposal, the Applicant agreed to install diesel particulate filters to reduce the project risk. The Applicant later decided to accept a reduced combined limit on discretionary operation of the engine-generators at the facility to 700 hours per year to reduce the project risk as an alternative to installing diesel particulate filters.

Table 9
Project TAC Emissions and Regulation 2-5 Trigger Levels

Pollutant	Annual Project Emissions (lbs/yr)	Hourly Project Emissions (lbs/hr)	Chronic Trigger Level (lbs/yr)	Acute Trigger Level (lbs/hr)
Diesel PM	368.4	--	0.58	--
Ammonia	75.4	3.4	7,700	7.1

The final refined risk analysis was performed using the AERMOD air dispersion model, using the highest expected diesel PM emission rate, which has been shown to correspond to operation of the engines at 25% load. The emissions resulting from operation at 25% load and 700 hours of total engine operation have been summarized in Table 9 above. The AERMOD model was run with the "urban" option and with all sources specified as urban sources. Discretionary use of the engine-generators was distributed over three 8-hour shifts, as follows, to minimize impacts to neighboring industrial receptors:

- Midnight to 8am: 300 total hours per year
- 8am to 4pm: 200 total hours per year
- 4pm to Midnight: 200 total hours per year

AERMOD meteorological files were created from twelve 30-degree sectors with representative 2004 surface and upper air data. In order to include all terrain that exceeds a 10% slope from any receptor, twelve 30m USGS DEM files were used to create the terrain map (Palo Alto, Mountain View, Milpitas, Calaveras Reservoir, Mindego Hill, Cupertino, San Jose West, San Jose East, Big Basin, Castle Rock Ridge, Los Gatos, and Santa Teresa Hills). Stack and building parameters were based on information provided by the Applicant.

Model runs were performed to estimate the maximum project risk, including cancer risk, chronic hazard index for residential receptors and offsite workers, and acute hazard index for the maximally exposed receptor. Estimates of residential risk assume exposure to the annual average TAC concentrations for 24 hours per day, 350 days per year, for a 70-year lifetime. Risk estimates for offsite workers assume exposure occurs during one 8 hour shift per day, 245 days per year, for 40 years. Risk estimates for students were not calculated as the project site is an industrial area with no schools located within 1000 feet of the project. Cancer risk adjustment factors were incorporated into the calculation of all cancer risk estimates. These factors are age-specific weighting factors used to reflect the anticipated special sensitivity to carcinogens in infants, children, and adolescents.

Based on 700 hours of combined operation of the engine generators, limited to 300 hours annually between the hours of 12am and 8am, 200 hours annually between 8am to 4pm, and 200 hours annually

from 4pm to 12 am, the estimated increase in cancer risk from this project is 1.2 in a million for the nearest residential receptor and 9.9 in a million for the offsite worker. Note that this estimate of risk has been based on the emission rate corresponding to discretionary operation of the engine-generators at 25% load at all times. The actual loads will vary during maintenance and testing, thereby resulting in lower PM emissions and lower corresponding risk.

The diesel exhaust TAC emissions used to determine the acute hazard index are from the California Air Toxics Emission Factors database and are based on fuel consumption rate. Modeling for the maximum 1-hour impact shows that the maximum acute hazard index of 0.34 occurs when the engine are operated at 100% load. Ammonia slip emissions were also used in this assessment of acute hazard index. The highest non-cancer hazard index is 0.007.

In accordance with District Regulation 2, Rule 5, Sections 301 and 302, a cancer risk of less than 10 in a million and chronic and acute hazard indices of less than 1.0 are considered acceptable if TBACT has been applied. For emergency compression ignition engines greater than 50 hp, TBACT is defined as a diesel PM10 emission rate of 0.15 g/bhp-hr or less (see Table 6). This emission standard applies to the ISO 8178 D-2 test cycle results from the engines. The proposed engine-generators are Tier 2 certified with a certified load-weighted ISO 8178 D-2 test cycle emission rate of 0.15 g/bhp-hr. Therefore, since these engine-generators meet TBACT, the maximum risk for this project of 9.9 in a million and the non-cancer indices are approvable per Regulation 2-5-302.

The final modeling results and calculation of risk for this project are attached (see report dated April 30, 2010). The limitation on discretionary operating hours will be enforced through a permit condition requiring use a non-resettable totalizing meter to track usage of each engine and recordkeeping to document the time and reason for each period of operation.

Ammonia emissions are not carcinogenic and therefore do not impact the cancer risk of the project. The standard level of ammonia slip has been shown to result in low hazard indices, and even a slip level 3-4 times higher than this standard level would still be approvable under Regulation 2, Rule 5. Since these engine-generators will be low use backup units, and impacts from the expected ammonia slip is slight, no condition limit regulating ammonia slip has been deemed necessary, and no monitoring of ammonia slip will be required.

H. District Regulation 2, Rule 6, Major Facility Review

The federal operating permit program requirements of 40 CFR Part 70 (Title V of the Clean Air Act Amendments of 1990) have been codified in District Regulation 2, Rule 6. Part 70 requires issuance of federal operating permits to major facilities, Phase II acid rain facilities, subject solid waste incinerator facilities, and to certain designated facilities. The District's program implementing these requirements through Regulation 2, Rule 6 was approved by EPA in July 1995.

The proposed data center will not be a Phase II acid rain facility, subject solid waste incinerator facility, or one of the designated source categories specified as subject to federal operating permit requirements. Therefore, the proposed facility would only be subject to Regulation 2, Rule 6 if it is a major facility.

"Major facility" is defined in District Regulation 2-6-212, as follows:

For regulated air pollutants: *"A facility that has the potential to emit 100 tons per year or more of any regulated air pollutant except total suspended particulate. For fugitive emissions of regulated air pollutants, only the fugitive emissions from facility categories listed in 40 CFR 70.2 "Definitions – Major source (2)" shall be included in determining whether the facility is a major facility. ..."*

For hazardous air pollutants: *"A facility that has the potential to emit 10 tons per year or more of a single hazardous air pollutant, 25 tons per year or more of a combination of hazardous air pollutants, or such lesser quantity as the EPA administrator may establish by rule. All fugitive emissions of hazardous air pollutants are included in determining a facility's potential to emit. ..."*

A facility's potential to emit is based on the maximum capacity of the facility to emit pollutants based on its physical and operational design, limited only by legally enforceable restrictions. The Applicant has requested limitations on total use of the engine-generators, including emergency use, to limit the facility's potential to emit to less than the major source thresholds.[2]

The Manual of Procedures, Volume II, Part 3 specifies that combined potential emissions from all exempt and miscellaneous activities that are not subject to District permitting must be included in the assessment of a facility's potential to emit if the combined emissions equal or exceed 2 tons per year of any regulated air pollutant or 1000 lbs per year of any hazardous air pollutant. The emissions from the 4 exempt natural gas boilers exceed 2 tons per year of CO; therefore, the emissions from the exempt sources have been included in the assessment of the facility's potential criteria pollutant emissions.

The potential emissions from the boilers have been based on maximum firing capacity and continuous operation. Likewise, the emissions from the cooling towers have been based on maximum water circulation rate and continuous operation, as well as the actual water content analysis and a conservative drift rate. The diesel storage tank emissions have been based on projected turnover rates. The potential emissions for the diesel engine-generators have been based on combined total usage of 8,000 hours per year, including emergency operation. The potential emissions from the proposed project are summarized in Table 10 below.

Table 10
Potential Emissions for Plant #18801 (tpy)

	PM	POC	NOx	SO2	CO
Exempt Boilers	0.23	0.17	1.50	0.02	2.53
Exempt Diesel Storage Tanks	--	0.01	--	--	--
Exempt Cooling Towers	1.10	0.01	--	--	--
S-1 - S-32, Engine-Generators	2.11	6.50	93.11	0.14	41.89
Total	3.4	6.7	94.6	0.2	44.4

Since the potential emissions from the exempt diesel storage tanks and cooling towers could not cause the facility to be a major source for PM and POC emissions, no permit conditions for these exempt

[2] When permitting emergency diesel engines, the District typically limits only emissions resulting from non-emergency use, since emergency use of generators is not limited under District regulations. In this case, the Applicant has proposed limits on both discretionary and emergency usage of the enginegenerators to limit the facility's potential emissions for purposes of District Regulation 2, Rule 6.

sources are necessary. Likewise, the hazardous air pollutant emissions from these sources are significantly less than the 10 and 25 ton per year limits on individual and combined pollutants; therefore, no permit conditions are necessary to limit hazardous air pollutant emissions.

The SO2 and CO emissions from the exempt boilers and the engine-generators, based on 8,000 hours of operation of the engine-generators and continuous operation of the boilers, are not close to the major source thresholds. NOx is the only pollutant for which the facility's potential to emit could approach 100 tons per year. The NOx emissions from the exempt boilers have been based on maximum physical capacity of the units, so no permit condition is required to enforce this limit. The permit conditions will include a total combined operating limit for the engine-generators limiting usage to 8,000 hours for emergency and other purposes. This permit condition will limit the NOx emissions from the facility to less than the major source thresholds, and therefore the facility will not be subject to Major Facility Review. The permit conditions will require monitoring and recordkeeping to demonstrate compliance with this permit condition limit.

I. District Regulation 3, Fees

The Applicant was billed and has paid the initial, filing, and risk assessment application fees, as well as one year of operating fees, including a toxics surcharge. The initial fee assessment were billed under Invoice #1VJ54, and was paid in full by check on December 26, 2007, Log #M164A. The final invoice balance, after removal of the fees for exempt sources and addition of the fees for the CEQA analysis and revisions to the first year Permit to Operate fees, was paid in full on June 30, 2010.

J. District Regulation 6, Rule 1, "Particulate Matter – General Requirements"

The exempt boilers are expected to comply with the Ringelmann 1 limit and visible emissions prohibition in District Regulation 6, Rule 1, Sections 301 and 305, since visible particulate emissions are normally not associated with combustion of gaseous fuels, such as natural gas. The exempt cooling towers and diesel storage tanks are not expected to be sources of visible emissions. The diesel engine-generators are subject to the Ringelmann 2 limit and visible emissions prohibition in Sections 303 and 305. Compliance with these standards is expected as these are new, certified engines.

The engine-generators are also subject to the Section 310 filterable particulate emissions limit of 0.15 grains per dry standard cubic foot of exhaust volume. The certified particulate emission rate for the engine-generators is 0.12 grams/bhp-hr. The abated emission rate is equivalent to 0.003 grains/dscf and will comply with the Section 310 emission limit. The standard emission factor for natural gas-fired boilers is 0.00745 lbs/MMBtu, or 0.006 grains/dscf, so the exempt boilers will also comply with this emission limit

K. District Regulation 8, Rule 1, Organic Compounds – General Provisions

All internal combustion engines are exempt from District Regulation 8 per Section 8-1-110.2, therefore Regulation 8 does not apply to the engine-generators S-1 through S-32.

L. District Regulation 8, Rule 2, Organic Compounds – Miscellaneous Operations

District Regulation 8, Rule 2 regulates organic compound emissions from all miscellaneous operations not otherwise regulated under a different Regulation 8 rule. Combustion sources are regulated as

miscellaneous operations under this rule. However, emissions from natural gas operations are exempted under Section 8-2-110, therefore the natural gas-fired boilers are exempt from the requirements of this rule.

M. District Regulation 8, Rule 5, Organic Compounds – Storage of Organic Liquids

Per District Regulation 8-1-117, storage of organic liquids with true vapor pressure less than or equal to 0.5 psia are exempt from District Regulation 8, Rule 5, except for Section 8-5-307.3. Regulation 8-5-307.3 regulates pressure relief devices on pressure tanks or tanks blanketed with organic gases other than natural gas. The exempt diesel tanks will not be pressure tanks or blanketed, therefore this section does not apply. Per Table 1 of this regulation, the vapor pressure of diesel fuel will not exceed 0.5 psia as long as the temperature does not exceed 230 degrees F. The storage tanks are underground tanks and the temperature will not exceed this threshold, therefore the permit-exempt diesel storage tanks are also exempt from the requirements of this rule.

N. District Regulation 9, Rule 1, Inorganic Gaseous Pollutants – Sulfur Dioxide

The emissions of sulfur dioxide from the engine-generators and the boilers are subject to District Regulation 9, Rule 1. The engines burn diesel fuel and are subject to Regulation 9-1-304, which prohibits burning of fuel containing more than 0.5% sulfur by weight. The facility is expected to comply with this requirement since only CARB-certified diesel fuel can be used in California, and this fuel has a maximum sulfur content of 0.0015% by weight or less. The boilers are subject to the general emission limitation of 300 ppmv sulfur dioxide, dry, in Section 9-1-302 and are expected to comply with this requirement as they will be fuelled with natural gas containing less than 6 ppm of sulfur by volume. All sources are subject to the ground level concentration limits in Section 9-1-301 and are expected to comply with this limit, as they are not significant sources of sulfur dioxide.

O. District Regulation 9, Rule 2, Inorganic Gaseous Pollutants – Hydrogen Sulfide

The ground level concentration limit on hydrogen sulfide from all sources, contained in District Regulation 9, Rule 2, Section 301, is 0.06 ppmv averaged over 3 minutes or 0.03 ppmv averaged over 60 minutes. Hydrogen sulfide is generally identified by its characteristic rotten egg small and can be detected by its odor at concentrations as low as 0.0005 ppmv. Therefore, H2S emissions are usually detected by smell well before the concentrations approach the limits in Regulation 9-2-301. The diesel fired engine-generators and the exempt natural gas boilers are expected to comply with these limits as they are not significant sources of hydrogen sulfide.

P. District Regulation 9, Rule 6, Inorganic Gaseous Pollutants – Nitrogen Oxide Emissions from Natural Gas-Fired Boilers and Water Heaters

District Regulation 9, Rule 6 limits emissions of nitrogen oxides from natural gas-fired water heaters and boilers. The exempt natural gas-fired boilers have a rated capacity of 1.75 MMBtu/hr and are subject to the requirements in Regulation 9-6-303.3, which applies to units with a rated heat input capacity of 400,001 Btu/hr to 2 MMBtu/hr manufactured after 1-1-2008. This section limits emissions from subject boilers and water heaters to not more than 20 nanograms of NOx (calculated as NO2) per joule of heat output, or 30 ppmv NOx at 3% oxygen, dry. Based on the EPA's standard NOx emission factors of 50 lbs/MMscf, at full input, the boilers generate a net output of 1.488 MMBtu/hr, which is equivalent to 24.1 nanograms NOx per joule of heat output. However, the manufacturer has provided a NOx emission

test report for this class of units that shows that the maximum NOx emissions from these units are 13 ppmv at 3% oxygen, dry, based on South Coast Air Quality Management District test protocols. As the measured and corrected NOx emission concentration for this boiler class is less than 30 ppmvd at 3% oxygen, the permit-exempt boilers comply with Regulation 9-6-303.3.

Q. District Regulation 9, Rule 8, Inorganic Gaseous Pollutants – Nitrogen Oxides and Carbon Monoxide from Stationary Internal Combustion Engines

Until January 1, 2012, the engines-generators S-1 through S-32 are exempt from the requirements in District Regulation 9, Rule 8, Sections 301 through 305, 501, and 503 per Regulation 9-8-110.5, which exempts emergency standby engines from compliance with these sections.

Regulation 9-8-330.1 allows unlimited use of sources S-1 through S-32 for emergency use. Note that the Applicant has accepted a voluntary limit on emergency use to limit the facility's potential to emit to less than the major source thresholds. Section 9-8-330.1 does not negate this limit.

Sections 330.2 and 330.3 limit use for reliability-related (discretionary) activities to no more than 100 hours per calendar year and effective 1-1-2012, to no more than 50 hours per calendar year, respectively. These engine-generators will comply with the current and future effective limits on reliability-related activities, as the permit conditions will include a limit of no more than 50 hours per year to comply with the state air toxics control measure, discussed below. Note that the Applicant has accepted a limit on total reliability-related use of the engines at this facility that is equivalent to less than 50 hours per year per engine, on average. Both the 50 hour per year limit in this rule and the state air toxics control measure and the combined limit on total facility usage will apply.

The monitoring and recordkeeping requirements of Regulation 9-8-530 apply and require a non-resettable totalizing meter that measures hours of operation or fuel usage, as well as records of hours of operation, identification of emergency and non-emergency hours, and the nature of any emergency conditions. These requirements will be included in the permit conditions for these sources. The applicant is expected to comply with the limits on discretionary use, as well as the monitoring and recordkeeping requirements of this rule.

R. Title 17, CA Code of Regulations, Section 93115, Airborne Toxics Control Measure for Stationary Compression Ignition Engines

The engine-generators are subject to the California Air Resources Board Airborne Toxic Control Measure (ATCM) for stationary diesel engines. The ATCM defines two categories of regulated units – "emergency standby engine" and "prime compression ignition engine." The definition of emergency standby engine under the ATCM is different from the definition in District Regulation 9, Rule 8.

As the engine-generators, S-1 through S-32, were initially proposed to be used under both emergency conditions and under non-emergency conditions (anticipatory use), the District requested a specific applicability determination for this project from the California Air Resources Board (CARB).
On March 26, 2008, CARB confirmed that the engine-generators as proposed would be considered new stationary emergency standby engines under the ATCM, as currently written. Subsequently, the Applicant removed all question regarding the classification of these engine-generators when it was indicated that the engine-generators would not be used in any anticipatory manner, but only when measured faults with the regular electric power supply are detected.

Section 93115.5(a) limits fuel usage to CARB diesel fuel, or alternative fuels as listed under Section 93115.5(a)(2)-(6). CARB diesel fuel is defined as vehicular diesel fuel meeting the specifications in California Code of Regulations, title 13, Sections 2281 and 2282. Section 2281 limits the sulfur content of the fuel to 15 ppmw (0.0015%), and Section 2284 limits the aromatic hydrocarbon content to 10% by volume. This limitation to CARB diesel will be included in the permit conditions, and compliance with this fuel limit is expected.

Section 93115.6(a)(1) limits use of diesel-fuelled engines at or within 500 feet of K-12 school grounds. This facility is not located within 500 feet of a K-12 school, therefore this section does not apply. Section 93115.6(a)(2) sets limitations on operation during impending rotating outages. The Applicant has indicated that these engine-generators will not be used in anticipation of a power outage so this section does not apply.

Section 93115.6(a)(3)(A) limits PM emissions from new emergency standby diesel engines to 0.15 g/bhp-hr and limits discretionary use of these engines to no more than 50 hours per year. The certified emission standards for these proposed engine-generators are 0.15 g/bhp-hr, therefore engines comply with this standard. The discretionary use limits will be included in the permit conditions for these sources, and compliance with the limits on discretionary usage is expected.

Section 93115.6(a)(3)(B) limits HC, NOx, NMHC + NOx, and CO emissions from new emergency standby diesel engines to the standards specified in title 13, CCR, Section 2423 for off-road engines of the same model year and maximum rated power, or if none exists, to the Tier 1 standards for the same rated power. Title 13, Section 2423 limits emissions from 2006 to 2010 model engines rated > 560 kW to the Tier 2 standards of 6.4 g/kW-hr NMHC + NOx, 3.5 g/kW-hr CO, and 0.20 g/kW-hr PM. Section 93115.10(c) requires the Applicant to provide emission data to demonstrate compliance with these limits. The Applicant has supplied an engine certification for sources S-1 through S-32, showing the 2010 model year 2500 kW engines are certified to meet the Tier 2 emission standards and therefore comply with this section.

Section 93115.10(e) requires use of a non-resettable hour meter with minimum display capability of 9999 hours. Section 93115.10(g) requires recordkeeping and monthly summaries of emergency use, maintenance and testing use, emission testing use, startup testing use, and fuel type. The records must be maintained for a minimum of 36 months. These requirements will be included in the permit conditions for these sources, and compliance with these terms is expected.

S. Air Toxics "Hot Spots" Program, Assembly Bill 2588

The "Hot Spots" program is designed to identify industrial and commercial emitters of toxic air contaminants and encourage reductions of these emissions. The program specifies that facilities with higher risk levels must reduce their risk to below levels identified by the District as "significant" within a defined time frame. Under this program, the District has also established specific public notification requirements based on the level of risk associated with the emissions from a facility.

For each facility, the District reviews applicability of this program upon renewal of the facility's operating permits. This review includes calculation of the facility's emissions based on the most recent material and fuel usage, as well as other operating parameters. The toxic air contaminant emissions for the facility are weighted for carcinogenic and non-carcinogenic bases and if the resulting emissions

exceed a defined prioritization score, the facility is contacted to either demonstrate a lower risk through a risk analysis or to comply with the public notice and/or risk reduction requirements of this rule.

As the facility will be a new site and the risk from the discretionary operation of all permitted sources has been evaluated under this application, the associated total offsite cancer risk from the facility has been established. The maximum offsite cancer risk from 700 hours of total operation of all 32 engine-generators, segregated into 3 defined shifts, has been calculated to be 9.9 in a million. If annual operation of the engine-generators for both emergency and non-emergency use does not exceed these defined hourly limitations, this facility will meet the definition of a Level 0 facility (overall cancer risk of less than 10 in one million) and will not be subject to the risk reduction or public notification requirements under this program. If the reported emergency and non-emergency use exceeds 700 hours of total operation, the facility will become subject to the reporting requirements of this rule.

T. 40 CFR Part 52.21, Prevention of Significant Deterioration of Air Quality

The requirements of 40 CFR Part 52.21 apply to construction of a new major stationary source or any project at an existing major stationary source. Section 52.21(b)(1)(i) defines a major stationary source as a facility with the potential to emit 100 tons per year or more of any regulated NSR pollutant, if one of the listed source categories, or 250 tons per year or more of a regulated NSR pollutant for non-listed source categories. The proposed data center will be a new stationary source, but emergency diesel engines are not one of the listed source categories. Since the facility's potential to emit has been limited to less than 95 tons per year of regulated air pollutants as discussed under Regulation 2, Rule 6 above, the facility's potential emissions will be less than 250 tons per year of regulated air pollutants and the facility will not be subject to this regulation.

U. 40 CFR Part 60, Standards of Performance for New Stationary Sources (NSPS)

Subpart D – Standards of Performance for Fossil-Fuel Fired Steam Generators for which Construction is Commended after 8-17-1971
Subpart Da – Standards of Performance for Electric Utility Steam Generating Units for which Construction is Commended after 9-18-1978
Subpart Db – Standards of Performance for Industrial-Commercial-Institutional Steam Generating Units
Subpart Dc – Standards of Performance for Small Industrial-Commercial-Institutional Steam Generating Units
Subpart D applies to fossil-fuel fired steam generating units of more than 250 MMBtu/hr; Subpart Db applies to steam generating units greater than 100 MMBtu/hr heat input rate; and Subpart Dc applies to steam generating units with heat input capacity between 10 MMBtu/hr and 100 MMBtu/hr. The exempt natural gas-fired boilers are 1.75 MMBtu/hr capacity each and are therefore not subject to these subparts. Subpart Da applies to electric utility steam generating units. The boilers in this project will not be supplying any output to a utility power distribution system for sale and are therefore not subject to this subpart.

Subpart Kb – Standards of Performance for Volatile Organic Liquid Storage Vessels for Which Construction, Reconstruction, or Modification Commenced After July 23, 1984
Per Section 60.113b(b), Subpart Kb does not apply to storage vessels with a capacity of 151 cubic meters (39,888 gallons) or more, storing a liquid with a maximum true vapor pressure less than 3.5 kilopascals (0.51 psia). As discussed under District Regulation 8, Rule 5 above, the proposed storage tanks will be

underground tanks with a capacity of 50,000 gallons each. The vapor pressure of diesel fuel is not expected to exceed 0.5 psia in an underground storage tanks. Therefore the permit-exempt diesel storage tanks are not subject to this subpart.

Subpart A, Standards of Performance for New Stationary Sources – General Provisions
Subpart IIII, Standards of Performance for Stationary Compression Ignition Internal Combustion Engines
40 CFR Part 60, Subpart IIII applies to compression ignition engines, therefore the engines S-1 through S-32 are subject to this subpart. The applicable requirements from this regulation are summarized below.

Emission Standards: The emission standards are defined for "emergency stationary internal combustion engines" and "non-emergency stationary internal combustion engines." However, for model year 2007 and later engines with a displacement of less than 30 liters per cylinder, the emission standards are the same for both emergency and non-emergency engines. Sources S-1 through S-32 have a displacement of 76.3 liters and are equipped with 16 cylinders, each. This is equivalent to 4.77 liters displacement per cylinder, so the sources are subject to the emission standards under this rule. Section 60.4205(b) specifies that emergency standby CI engines must meet the emission standards in Section 60.4202, and Section 60.4202(b)(1) requires compliance with the emission standards in Table 1.

The emission standards from Table 1 of the regulation for engines with a rating greater than 750 hp are summarized in Table 9 below, along with the certified emissions for S-1 through S-32, in g/bhp-hr:

Table 9
NPSP Subpart IIII Emission Standards and Project Emissions (g/bhp-hr)

	HC	NOx	CO	PM
NSPS Emission Standard	1.0	6.9	8.5	0.40
S-1 - S-32, Certified Emissions	0.22	4.2	1.42	0.15

Section 60.4211(b) specifies acceptable methods for demonstrating compliance with the emission standards. These engines are certified engines, with certified emission levels less than the standards of this rule. Compliance has been demonstrated through the certified emissions, per Section 60.4211(b)(1).

Operating Restrictions: Section 60.4207(a) limits fuel use to diesel fuel meeting the requirements of 40 CFR 80.510(a). Part 80.510(a) limits the sulfur content of diesel fuel to 500 ppmw and cetane index to 40 or maximum aromatic content to 35%, by volume. For internal combustion engines with a displacement of less than 30 liters per cylinder, beginning 10-1-2010, the maximum sulfur content of allowable fuel will be reduced to 15 ppmw (40 CFR 80.510(b) for non-road diesel fuel). State law currently limits diesel fuel sold and used in California to 15 ppmw sulfur and 10% by volume aromatic content. Therefore, use of CARB diesel will comply with the current and future effective federal fuel restrictions. This limitation will be included in the permit conditions for these sources.

Section 60.4211(a) requires operation of each engine according to the manufacturer's instructions and Parts 89, 94, and/or 1068 if applicable. Operation in compliance with the manufacturer's instructions will be included as a permit condition, and compliance is expected. Part 89 applies to non-road engines subject to Part 61, Subpart IIII, but contains only general provisions and does not specify additional engine operating restrictions. Part 94 applies to marine engines and therefore does not apply to this

project. Part 1068 applies to manufacturers of non-road engines and therefore does not apply to this facility.

Section 60.4211(e) allows operation of emergency stationary internal combustion engines for maintenance and testing as recommended by federal, state, local government, or the manufacturer, vendor, or insurance company associated with the engine, limited to 100 hours per year. Emergency use is not limited. S-1 through S-32 are expected to comply with this limits, as they are subject to a more stringent 50 hour/year discretionary use limit and a commissioning limit of 50 hours upon start-up, which will be included in the permit conditions for these sources.

Monitoring, Recordkeeping, Reporting: Section 60.4209 requires installation of a non-resettable hour meter prior to startup of the engines. This requirement and monitoring will be enforced through permit conditions.

Table 8 lists the applicable general provisions from Subpart A that apply to units regulated by this subpart. All sections from Subpart A apply, except for Sections 60.11 and 60.18 do not apply. Sections 60.8 and 60.13 apply to regulated units under Subpart IIII, but do not apply to S-1 through S-32, since these engines do not have a displacement of 30 liters per cylinder or greater.

V. 40 CFR Part 61, National Emission Standards for Hazardous Air Pollutants (NESHAPs)

There are no subparts under 40 CFR Part 61 that apply to internal combustion engines, natural gas-fired boilers, cooling towers, or diesel storage tanks, therefore this regulation does not apply to any of the sources proposed in this project.

W. 40 CFR Part 63, National Emission Standards for Hazardous Air Pollutants for Source Categories/Maximum Achievable Control Technology (MACT) Standards

Subpart OO, National Emission Standards for Tanks - Level 1
Subpart WW, National Emission Standards for Storage Vessels (Tanks) - Control Level 2
The provisions of Subparts OO and WW apply to control of air emissions from tanks and storage vessels for which another subpart of 40 CFR parts 60, 61, or 63 references this subpart for emission control. The diesel storage tanks are not subject to any subparts under Parts 60, 61, or 63, therefore Subparts OO and WW do not apply.

Subpart PP, National Emission Standards for Containers
The provisions of Subpart PP apply to control of air emissions from containers for which another subpart of 40 CFR parts 60, 61, or 63 references this subpart for emission control. A container is defined as a portable unit in which material can be stored, transported, treated, disposed of, or otherwise handled. The diesel storage tanks proposed for this project are not portable units, therefore Subpart PP does not apply.

Subpart Q – National Emission Standards for Hazardous Air Pollutants for Industrial Process Cooling Towers
Subpart Q applies to industrial process cooling towers that are operated with chromium-based water treatment chemicals that are either major sources or integral parts of facilities that are major sources. This facility will not be a major source, so this subpart does not apply.

Subpart A, National Emission Standards for Hazardous Air Pollutants – General Provisions
Subpart ZZZZ, National Emission Standards for Hazardous Air Pollutants for Stationary Reciprocating Internal Combustion Engines
40 CFR Part 63, Subpart ZZZZ applies to stationary reciprocating internal combustion engines located at major and area sources of HAP emissions. This facility will not be a major source of HAP emissions, and will therefore be an area source of HAP emissions. S-1 through S-32 will be installed after June 12, 2006 and are considering new sources under this subpart.

Section 63.6590(c) specifies that an affected source that is a new or reconstructed, compression ignition, stationary reciprocating internal combustion engine located at an area source must meet the requirements of this subpart by meeting the requirements of 40 CFR Part 60, Subpart IIII. No other requirements apply under this subpart. The requirements of 40 CFR Part 60, Subpart IIII were discussed above.

Subpart DDDDD – National Emission Standards for Hazardous Air Pollutants for Industrial, Commercial, and Institutional Boilers and Process Heaters
Subpart DDDDD applies to industrial, commercial, or institutional boilers or process heaters located at a major source of HAP emissions. This facility will not be a major source of HAP emissions, therefore this subpart does not apply.

X. 40 CFR Part 70, Federal Operating Permit Program (Title V)

The requirements of 40 CFR Part 70 have been codified in District Regulation 2, Rule 6. See discussion of District Regulation 2, Rule 6 above.

V. Permit Conditions

The following permit conditions will apply to this facility:

Permit Condition #24670
Xeres Ventures LLC, P#18801
Permit Application #17020
Permit Conditions for Sources S-1 through S-32, Emergency Diesel-fired Internal Combustion Engine Generators, Model Year 2010 Detroit Diesel MTU 16V4000G83, 3353 bhp, each;
Each abated by a Selective Catalytic Reduction System (A-1 through A-32)

1. The owner/operator shall operate each engine only for the following purposes:
   a. To mitigate emergency conditions,
   b. For emission testing to demonstrate compliance with a District, State or Federal emission limit,
   c. For initial startup testing/commissioning, or
   d. For reliability-related activities (maintenance and other testing, but excluding initial startup testing/commissioning and emission testing).

   Operating while mitigating emergency conditions or while emission testing to show compliance with District, State or Federal emission limits is not limited.

[Basis: Stationary Diesel Engine ATCM 17 Cal. Code of Regs. ("CCR") Section 93115.6(a)(3)(A)(1)(c) (2010)]

2. The owner/operator shall ensure that each engine is operated for no more than 50 hours for reliability-related activities in any consecutive 12-month period.

[Basis: District Regulation 9, Rule 8, Section 330; Stationary Diesel Engine ATCM 17 CCR Section 93115.6(a)(3)(A)(1)(c)]

3. The owner/operator shall further limit the hours of reliability-related operation of each engine so that the combined reliability-related operation for all 32 engines does not exceed 700 hours in any consecutive 12-month period and that the combined operating hours are limited to the following times:
   a. From 12am up to 8am: 300 hours
   b. From 8am to up to 4pm: 200 hours
   c. From 4pm to up to 12am: 200 hours

[Basis: Cumulative Increase; District Regulation 2, Rule 5]

4. The owner/operator shall ensure that no more than 16 engines are operated at one time for initial startup testing/commissioning purposes. The owner/operator shall also ensure that combined operation for initial startup testing/commissioning does not exceed 800 hours for each set of 16 engines (S-1 through S-16 and S-17 through S-32), unless a different limit is approved by the APCO.

[Basis: Stationary Diesel Engine ATCM 17 CCR Section 93115.6(a)(3)(C)(3)]

5. The owner/operator shall ensure that only one engine is operated at a time for emission testing and for reliability-related activities and shall ensure that the Load Bank is used for start-ups of these activities if they will last longer than 30 minutes and require a load of 50% or more.

[Basis: State AAQS 17 CCR Section 70200]

6. The owner/operator shall operate each engine only when a non-resettable totalizing meter (with a minimum display capability of 9,999 hours) that measures and records the hours of operation for the engine is installed, operated and properly maintained.

[Basis: District Regulation 2, Rule 5; District Regulation 9, Rule 8, Section 530; Stationary Diesel Engine ATCM 17 CCR Section 93115.10(e)(1); 40 Code of Fed. Regs. ("CFR") Section 60.4209 (2010)]

7. The owner/operator shall ensure that the emissions of nitrogen oxides (NOx) from each engine is abated through a properly operated and properly maintained Selective Catalytic Reduction (SCR) System whenever fuel is combusted at each source and the SCR catalyst bed has reached minimum operating temperature.

[Basis: Cumulative Increase; District Regulation 2, Rule 1, Section 403; State AAQS 17 CCR Section 70200]

8. When abatement of an engine by the SCR System is required by Part 7 above, the owner/operator shall ensure that the SCR System reduces NOx emissions (calculated as NO2) from the engine to no more than 46 ppmv, on a dry basis, corrected to 15% oxygen, as determined through Source Test Method ST-13 or alternate source test method approved by the District's Source Test Section.

[Basis: Cumulative Increase; District Regulation 2, Rule 1, Section 403; State AAQS 17 CCR Section 70200]

9. The owner/operator shall ensure that only CARB diesel fuel with a sulfur content not exceeding 0.0015% by weight (15 ppmw) and aromatic hydrocarbon content not exceeding 10% by volume is used at S-1 through S-32

[Basis: Stationary Diesel Engine ATCM 17 CCR Section 93115.5(b)(1)]

10. The owner/operator shall operate and maintain the engine-generators, S-1 through S-32, and associated SCR systems in accordance with the manufacturers' written instructions.

[Basis: 40 CFR Section 60.4211]

11. Notwithstanding Part 1, for the purpose of limiting the potential to emit of this facility, the owner/operator shall ensure that the emissions from emergency and all other use of the engines does not result in NOx emissions exceeding 93.5 tons per year. Compliance with this limit shall be tracked by ensuring that total combined operation of all engines at this facility does not exceed 8,000 hours in any consecutive 12-month period, including operation under emergency conditions and all other conditions. If the total operating hours for all of the engines at this site exceeds 8,000 hours in any consecutive 12-month period, the owner/operator must either submit a demonstration that the facility has not exceeded the major source thresholds or submit an application for a Major Facility Review Permit, in accordance with Regulation 2, Rule 6 and comply with the application requirements of 40 CFR Part 52.

[Basis: Regulation 2, Rule 6; 40 CFR Part 52]

12. Records: The owner/operator shall maintain the following records in a District-approved log:
    a. For operation of the engines: The date, source number, operation start and end times, whether the load bank was used, the load or load range, a description of the operation as listed in (i) through (v) below, and the name of the operator entering the log entry:
        i. emergency operation – and the nature of each emergency condition;
        ii. required emission testing – and citation of the applicable District, State or Federal regulation;
        iii. initial start-up/commissioning;
        iv. reliability-related activities; or
        v. other operation – and a description of why operation was necessary.
    b. Fuel usage for each engine and fuel purchase records, showing sulfur content.
    c. Maintenance records for the engines and SCR systems, including records of catalyst changes.
    d. At the end of the month, the hours operation in a(i) through a(v) above shall be totaled for each engine and summed with the previous 11 months of data to calculate the most recent 12-month sum.
    e. At the end of the month, the hours of operation for reliability-related activities (a(iv) above) for all engines at the facility shall be totaled for each of the time periods described in Part 3 and summed with the previous 11 months of data to calculate the most recent 12-month sums.
    f. The hours of operation for initial start-up/commissioning (a(iii) above) shall be totaled for S-1 through S-16 and S-17 through S-32.
    g. The total hours of operation for emergency (a(i) above) and all other purposes shall be totaled for all engines at the end of the month and summed with the previous 11 months of data to calculate the most recent 12-month sum.
    h. The fuel usage in b above shall be totaled at the end of each month for the previous 12-month period.

Log entries shall be retained on-site, either at a central location or at the engine location, for at least 60 months from the date of entry and be made immediately available to the District staff upon request.

[Basis: Cumulative Increase; District Regulation 2, Rule 5; District Regulation 2, Rule 6; District Regulation 9, Rule 8; Stationary Diesel Engine ATCM 17 CCR Section 93115.10(g); 40 CFR Part 52; 40 CFR Section 60.4209]

13. A Permit to Operate shall not be issued for, and the owner/operator shall not operate, Source S-17 through S-32 for any reason whatsoever until the California Energy Commission (CEC) has granted a small power plant exemption relating to the DuPont Fabros Data Center per Section 25541 of the California Public Resources Code, approved an application for certification relating to the DuPont Fabros Data Center per Chapter 6 of Division 15 of the California Public Resources Code, or it has otherwise been determined that Sources S-1 through S-32 are not subject to the provisions of Chapter 6 of Division 15 of the California Public Resources Code.

[Basis: District Regulation 2, Rule 1, Section 403]

14. The owner/operator shall conduct a District-approved start-up source test on each engine to demonstrate compliance with the NOx limit in Part 8 of this condition, no later than 120 days from initial start-up. The owner/operator shall conduct additional District-approved source tests to demonstrate compliance with the NOx limit in Part 8 of this condition no later than 60 days after each catalyst change. The owner/operator shall submit the source test results to the District's Source Test staff no later than 30 days after the source test has been performed.

[Basis: Cumulative Increase; District Regulation 2, Rule 1, Section 403; State AAQS 17 CCR Section 70200]

15. For the source test performed on the first engine, the owner/operator shall determine the time at which the SCR System becomes operational for an engine operated at 50% load, without use of the Load Bank to preheat the SCR System catalyst and shall measure the abated NOx emissions at 50% load. The owner/operator shall submit the test results to the District's Source Test and Engineering staff no later than 30 days after the source test has been performed. If operation of the engine at 50% load, without the Load Bank to preheat the SCR System catalyst, requires longer than 1 hour to reach the minimum exhaust temperature necessary for operation of the SCR System, the owner/operator shall submit revised NO2 modeling to demonstrate that the actual time necessary to reach the minimum catalyst temperature will not change the project's compliance with the state 1-hour NO2 standard.

[Basis: District Regulation 2, Rule 1, Section 403; State AAQS 17 CCR Section 70200]

16. The owner/operator shall obtain approval of all source test procedures from the District's Source Test Section prior to conducting any tests. The owner/operator shall comply with all applicable testing requirements as specified in Volume V of the District's Manual of Procedures. The owner/operator shall notify the District's Source Test Section, in writing, of the source test protocols at least 14 days prior to testing and of the projected test dates at least 7 days prior to testing.

[Basis: District Regulation 2, Rule 1, Section 403]

VI. Recommendations

I recommend issuance of Authorities to Construct for the following sources:

S-1, Emergency Diesel-fired Internal Combustion Engine-Generator 1A, Model Year 2010
Detroit Diesel MTU 16V4000G83, 3353 bhp
Abated by a Selective Catalytic Reduction System, A-1

S-2, Emergency Diesel-fired Internal Combustion Engine-Generator 1B, Model Year 2010
Detroit Diesel MTU 16V4000G83, 3353 bhp
Abated by a Selective Catalytic Reduction System, A-2

S-3, Emergency Diesel-fired Internal Combustion Engine-Generator 2A, Model Year 2010
Detroit Diesel MTU 16V4000G83, 3353 bhp
Abated by a Selective Catalytic Reduction System, A-3

S-4, Emergency Diesel-fired Internal Combustion Engine-Generator 2B, Model Year 2010
Detroit Diesel MTU 16V4000G83, 3353 bhp
Abated by a Selective Catalytic Reduction System, A-4

S-5, Emergency Diesel-fired Internal Combustion Engine-Generator 3A, Model Year 2010
Detroit Diesel MTU 16V4000G83, 3353 bhp
Abated by a Selective Catalytic Reduction System, A-5

S-6, Emergency Diesel-fired Internal Combustion Engine-Generator 3B, Model Year 2010
Detroit Diesel MTU 16V4000G83, 3353 bhp
Abated by a Selective Catalytic Reduction System, A-6

S-7, Emergency Diesel-fired Internal Combustion Engine-Generator 4A, Model Year 2010
Detroit Diesel MTU 16V4000G83, 3353 bhp
Abated by a Selective Catalytic Reduction System, A-7

S-8, Emergency Diesel-fired Internal Combustion Engine-Generator 4B, Model Year 2010
Detroit Diesel MTU 16V4000G83, 3353 bhp
Abated by a Selective Catalytic Reduction System, A-8

S-9, Emergency Diesel-fired Internal Combustion Engine-Generator 5A, Model Year 2010
Detroit Diesel MTU 16V4000G83, 3353 bhp
Abated by a Selective Catalytic Reduction System, A-9

S-10, Emergency Diesel-fired Internal Combustion Engine-Generator 5B, Model Year 2010
Detroit Diesel MTU 16V4000G83, 3353 bhp
Abated by a Selective Catalytic Reduction System, A-10

S-11, Emergency Diesel-fired Internal Combustion Engine-Generator 6A, Model Year 2010
Detroit Diesel MTU 16V4000G83, 3353 bhp
Abated by a Selective Catalytic Reduction System, A-11

S-12, Emergency Diesel-fired Internal Combustion Engine-Generator 6B, Model Year 2010 Detroit Diesel MTU 16V4000G83, 3353 bhp
Abated by a Selective Catalytic Reduction System, A-12

S-13, Emergency Diesel-fired Internal Combustion Engine-Generator 7A, Model Year 2010 Detroit Diesel MTU 16V4000G83, 3353 bhp
Abated by a Selective Catalytic Reduction System, A-13

S-14, Emergency Diesel-fired Internal Combustion Engine-Generator 7B, Model Year 2010 Detroit Diesel MTU 16V4000G83, 3353 bhp
Abated by a Selective Catalytic Reduction System, A-14

S-15, Emergency Diesel-fired Internal Combustion Engine-Generator 8A, Model Year 2010 Detroit Diesel MTU 16V4000G83, 3353 bhp
Abated by a Selective Catalytic Reduction System, A-15

S-16, Emergency Diesel-fired Internal Combustion Engine-Generator 8B, Model Year 2010 Detroit Diesel MTU 16V4000G83, 3353 bhp
Abated by a Selective Catalytic Reduction System, A-16

S-17, Emergency Diesel-fired Internal Combustion Engine-Generator 9A, Model Year 2010 Detroit Diesel MTU 16V4000G83, 3353 bhp
Abated by a Selective Catalytic Reduction System, A-17

S-18, Emergency Diesel-fired Internal Combustion Engine-Generator 9B, Model Year 2010 Detroit Diesel MTU 16V4000G83, 3353 bhp
Abated by a Selective Catalytic Reduction System, A-18

S-19, Emergency Diesel-fired Internal Combustion Engine-Generator 10A, Model Year 2010 Detroit Diesel MTU 16V4000G83, 3353 bhp
Abated by a Selective Catalytic Reduction System, A-19

S-20, Emergency Diesel-fired Internal Combustion Engine-Generator 10B, Model Year 2010 Detroit Diesel MTU 16V4000G83, 3353 bhp
Abated by a Selective Catalytic Reduction System, A-20

S-21, Emergency Diesel-fired Internal Combustion Engine-Generator 11A, Model Year 2010 Detroit Diesel MTU 16V4000G83, 3353 bhp
Abated by a Selective Catalytic Reduction System, A-21

S-22, Emergency Diesel-fired Internal Combustion Engine-Generator 11B, Model Year 2010 Detroit Diesel MTU 16V4000G83, 3353 bhp
Abated by a Selective Catalytic Reduction System, A-22

S-23, Emergency Diesel-fired Internal Combustion Engine-Generator 12A, Model Year 2010 Detroit Diesel MTU 16V4000G83, 3353 bhp
Abated by a Selective Catalytic Reduction System, A-23

S-24, Emergency Diesel-fired Internal Combustion Engine-Generator 12B, Model Year 2010 Detroit Diesel MTU 16V4000G83, 3353 bhp

Abated by a Selective Catalytic Reduction System, A-24

S-25, Emergency Diesel-fired Internal Combustion Engine-Generator 13A, Model Year 2010 Detroit Diesel MTU 16V4000G83, 3353 bhp
Abated by a Selective Catalytic Reduction System, A-25

S-26, Emergency Diesel-fired Internal Combustion Engine-Generator 13B, Model Year 2010 Detroit Diesel MTU 16V4000G83, 3353 bhp
Abated by a Selective Catalytic Reduction System, A-26

S-27, Emergency Diesel-fired Internal Combustion Engine-Generator 14A, Model Year 2010 Detroit Diesel MTU 16V4000G83, 3353 bhp
Abated by a Selective Catalytic Reduction System, A-27

S-28, Emergency Diesel-fired Internal Combustion Engine-Generator 14B, Model Year 2010 Detroit Diesel MTU 16V4000G83, 3353 bhp
Abated by a Selective Catalytic Reduction System, A-28

S-29, Emergency Diesel-fired Internal Combustion Engine-Generator 15A, Model Year 2010 Detroit Diesel MTU 16V4000G83, 3353 bhp
Abated by a Selective Catalytic Reduction System, A-29

S-30, Emergency Diesel-fired Internal Combustion Engine-Generator 15B, Model Year 2010 Detroit Diesel MTU 16V4000G83, 3353 bhp
Abated by a Selective Catalytic Reduction System, A-30

S-31, Emergency Diesel-fired Internal Combustion Engine-Generator 16A, Model Year 2010 Detroit Diesel MTU 16V4000G83, 3353 bhp
Abated by a Selective Catalytic Reduction System, A-31

S-32, Emergency Diesel-fired Internal Combustion Engine-Generator 16B, Model Year 2010 Detroit Diesel MTU 16V4000G83, 3353 bhp
Abated by a Selective Catalytic Reduction System, A-32

I recommend issuance of Letters of Exemption to the following sources:

(4) Natural Gas-fired Boilers, each with maximum 1.75 MMBtu/hr capacity: Exempt per § 2-1-114.1.2

(4) Underground Diesel Storage Tanks, each with maximum capacity 50,000 gallons: Exempt per § 2-1-123.3.2

(2) Cooling Towers, each with maximum recirculation rate 194,400 gal/hour: Exempt per § 2-1-128.4

Tamiko Endow 7-7-10

Tamiko Endow
Air Quality Engineer

Date

Appendix J

Site Plan of Phase 1 of Xeres Data Center
(undated / 2007)

Data Center SC1: Map

SPACE ALLOCATIONS

- Electrical/Mechanical
- Computer Room
- Public
- Circulation
- Data/Telco
- Support
- Administration/Office

Appendix K

Landscape Plans – Xeres Data Center (2010)

Base Line (July) - Estimated Water Use

ESTIMATED WATER USE (ETWU)

$$ETWU = area \times \left(\frac{ETL}{IE}\right) \times CE \times 0.62$$

ETWU = 414,452 gallons/year

eto = 6.5

ce = 1.0

irrigation valve	plant water use	hydro-zone area (non-irrigated)	hydro-zone area (irrigated)	Ks	Kd	Kmc	KL	etL	irrigation efficiency	ETWU
1	MEDIUM	0	30,215	0.5	1.1	1.0	0.55	3.58	0.62	108,019
2	MEDIUM	0	15,500	0.5	1.1	0.5	0.28	1.79	0.62	27,706
3	MEDIUM	0	5,922	0.5	1.1	1.0	0.55	3.58	0.62	21,171
4	MEDIUM	0	22,401	0.5	1.1	1.4	0.77	5.00	0.62	112,117
5	MEDIUM	0	15,318	0.5	1.1	1.0	0.55	3.58	0.62	54,762
6	MEDIUM	0	9,450	0.5	1.1	1.0	0.55	3.58	0.62	33,784
7	MEDIUM	0	14,230	0.5	1.1	1.0	0.55	3.58	0.62	50,872
8	MEDIUM	65,462	0	0.5	1.1	1.0	0.55	3.58	0.62	0
9	MEDIUM	0	1,203	0.5	1.1	1.4	0.77	5.00	0.62	6,021
	TOTAL		179,701							414,452

Design Case (July) - Estimated Water Use

ESTIMATED WATER USE (ETWU)

$$ETWU = area \times \left(\frac{ETL}{IE}\right) \times CE \times 0.62$$

ETWU = 194,043 gallons/year

eto = 6.5

ce = .8

irrigation valve	plant water use	hydro-zone area (non-irrigated)	hydro-zone area (irrigated)	Ks	Kd	Kmc	KL	etL	irrigation efficiency	ETWU
1	MEDIUM	0	30,215	0.5	1.1	1.0	0.55	3.58	0.80	66,972
2	MEDIUM	0	15,500	0.5	1.1	0.5	0.28	1.79	0.75	18,323
3	MEDIUM	0	5,922	0.2	1.1	1.0	0.22	1.43	0.75	5,600
4	MEDIUM	0	22,401	0.3	1.1	1.4	0.46	3.00	0.75	44,488
5	MEDIUM	0	15,318	0.2	1.1	1.0	0.22	1.43	0.75	14,486
6	MEDIUM	0	9,450	0.2	1.1	1.0	0.22	1.43	0.75	8,937
7	MEDIUM	0	14,230	0.5	1.1	1.0	0.55	3.58	0.75	33,644
8	MEDIUM	65,462	0	0.2	1.1	1.0	0.22	1.43	0.75	0
9	MEDIUM	0	1,203	0.2	1.1	1.4	0.31	2.00	0.75	1,593
	TOTAL		179,701							194,043

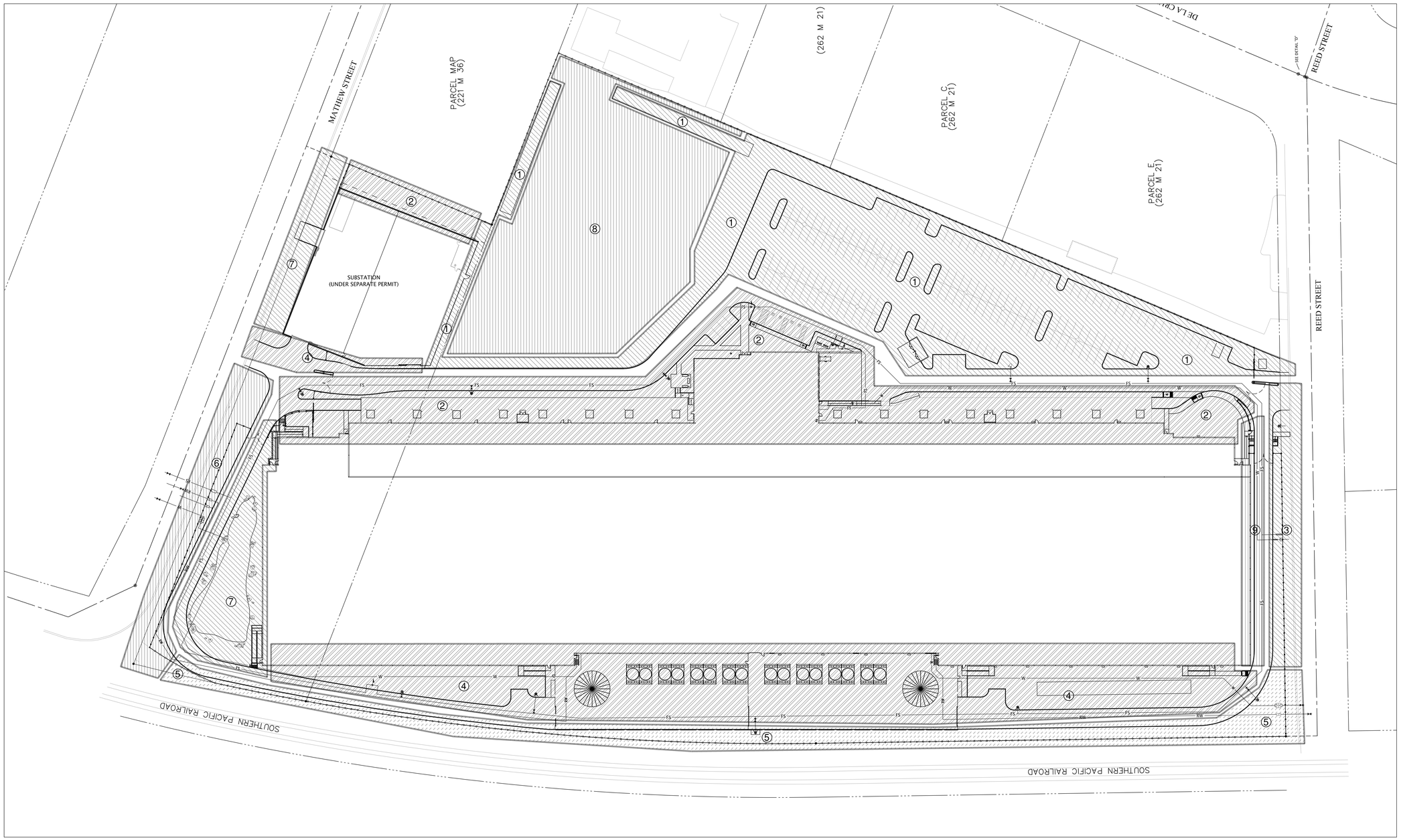

South Bay Water Recycling	Date
City of Santa Clara	Date
California Department of Public Health	Date

0 40 80 120

Scale 1" = 40 ft

800-227-2600

CALL BEFORE YOU DIG

FACILITIES INTERGRATION INCORPORATED

NO.	DATE	REVISION
	27/11/10	sbwr-irrigation
	12/13/10	irrigation rev.
	01/26/2011	bulletin #10
	03/02/2011	tree revisions
	03/11/2011	street tree adj.
1	03/21/2011	reclaimed water adj.
	5/11/11	bulletin 13

NO.	DATE	ISSUE
	07.17.10	PROGRESS
	5/23/08	DD PROGRESS

DuPont Fabros

SC-1
DATA CENTER SANTA CLARA

CCG
FACILITIES INTEGRATION
INCORPORATED

1500 S. EDGEWOOD STREET
BALTIMORE, MARYLAND 21227
(410)525-0010 FAX (410)525-1570

© 2006 ALL RIGHTS RESERVED

DVA
DONNALLY VUJCIC ASSOCIATES, L.L.C.
architecture ■ planning ■ interiors
400 Professional Drive, Suite 200
Gaithersburg, MD 20879
301-590-8900 ■ Fax 301-590-8620 ■
Email: dva-arch.com

REED ASSOCIATES
LANDSCAPE ARCHITECTURE
477 SOUTH TAAFFE STREET
SUNNYVALE, CALIFORNIA 94086
408.481.9020 / 408.481.9022 FAX
web: www.ra&a.net / email: ra&a@ix.net

REGISTERED LANDSCAPE ARCHITECT
PAUL JAY REED
No. 2002
EXP. 9/30/13
STATE OF CALIFORNIA

SEAL

LANDSCAPE IRRIGATION WATER REQUIREMENT PLAN

TITLE

L1.2

DRAWING NO.

A.00604	pjr
PROJECT NO.	DESIGNED BY
	dgs
FILE	DRAWN BY
1"=40'	pjr
SCALE	APPROVED BY

PLANT LIST:

KEY	BOTANICAL NAME	COMMON NAME	QTY.	SIZE	REMARKS	W.U.COEF.
	TREES					
T1	PLATANUS A. 'COLUMBIA'	LONDON PLANE TREE	18	15 gal	STANDARD	MEDIUM
T2	TRISTANIOPSIS LAURINA	WATER GUM	30	15 gal	STANDARD	MEDIUM
T3	ARBUTUS MARINA	N.C.N.	12	24"BX	STANDARD	LOW
T4	ULMUS PARVIFOLIA	CHINESE ELM	27	15 gal	STANDARD	MEDIUM
T5	KOELREUTERIA PANICULATA	GOLDENRAIN TREE	14	15 gal	STANDARD	MEDIUM
T6	PYRUS C. 'REDSPIRE'	FLOWERING PEAR	13	15 gal	STANDARD	MEDIUM
T7	CUPRESSUS ARIZONICA	ARIZONA CYPRESS	42	15 gal	NATURAL	VERY LOW
T8	PISTACIA CHINENSIS	CHINESE PISTACHE	14	36"BX	STANDARD	LOW
T9	QUERCUS AGRIFOLIA	COAST LIVE OAK	17	24"BX	STANDARD	LOW
T10	JUNIPERUS C. 'ROBUSTA GREEN'	ROBUSTA GREEN JUNIPER	12	15 GAL	COLUMNAR	LOW
	SHRUBS					
S1	CEANOTHUS G. H. 'YANKEE POINT'	CEANOTHUS	128	1 GAL		VERY LOW
S2	CEANOTHUS 'CONCHA'	CEANOTHUS	44	1 GAL		VERY LOW
S3	ARCTOSTAPHYLOS D. 'HOWARD MCMINN'	MCMINN MAZANITA	23	5 GAL		VERY LOW
S4	DODONAEA V. 'PURPUREA'	HOPSEED BUSH	104	5 GAL		LOW
S5	PHORMIUM 'YELLOW WAVE'	HYBRID FLAX	61	5 GAL		LOW
S6	RHAPHIOLEPIS U. 'MINOR'	N.C.N.	93	5 GAL		LOW
S7	HEMEROCALLIS 'EVERGREEN YELLOW'	DAYLILY	11	1 GAL		MEDIUM
S8	STIPA TENUISSIMA	MEXICAN FEATHER GRASS	46	1 GAL		LOW
S9	CISTUS X. HYBRIDUS	WHITE ROCKROSE	49	5 GAL		MEDIUM
S10	PITTOSPORUM TENUIFOLIUM	N.C.N.	86	5 GAL		LOW
S11	PITTOSPORUM T. 'VARIEGATA'	VARIGATED TOBIRA	175	5 GAL		LOW
S12	LOROPETALUM C. 'RAZZLEBERRI'	N.C.N.	38	5 GAL		LOW
S13	NANDINA D. 'COMPACTA'	HEAVENLY BAMBOO	--	5 GAL		LOW
S14	MYRICA CALIFORNICA	PACIFIC WAX MYRTLE	253	5 GAL		LOW
S15	ARBUTUS UNEDO	STRAWBERRY TREE	21	5 GAL		LOW
	GROUND COVERS					
G1	COTONEASTER C. 'LIKIANG'	N.C.N.	---	1 GAL	36" O.C.	MEDIUM
G2	ROSA 'WHITE CARPET'	GROUND COVER ROSE	---	1 GAL	36" O.C.	MEDIUM
G3	BACCHARIS P. 'TWIN PEAKS II'	DWARF COYOTE BRUSH	-	FLATS	24" O.C.	LOW
G4	MYOPORUM P. 'PROSTRATUM'	N.C.N.	---	FLATS	24" O.C.	LOW
G5	ROSMARINUS O. 'HUNTINGTON CARPET'	ROSEMARY	---	FLATS	18" O.C.	LOW
G6	FRAGARIA CHILOENSIS	BEACH STRAWBERRY	---	FLATS	12" O.C.	MEDIUM
G7	LANTANA MONTEVIDENSIS	TRAILING LANTANA	---	1 GAL	24" O.C.	LOW
G8	NO MOW SEED-MIX	SEE NOTE #15	---	SEED	---	MEDIUM
G9	DROUGHT TOLERANT HYDROSEED MIX	HYDROSEED MIX (NON-IRRIGATED)	---	SEED	--	LOW
G10	COPROSMA X KIRKII	N.C.N.	---	1 GAL	36" O.C.	LOW

HYDROSEEDING MIX-SEED MIX

BOTANICAL NAME	COMMON NAME	SEEDING RATE
BROMUS CARINATUS	NATIVE CALIFORNIA BROME	9.60 LBS/ACRE
HORDEUM CALIFORNICUM	CALIFORNIA BARLEY	9.60 LBS/ACRE
FESTUCA RUBRA	MOLATE RED FESCUE	7.20 LBS/ACRE
LEYMUS TRITICOIDES	RIO CREEKING WILDRYE	6.00 LBS/ACRE
DESCHAMPSIA CAESPITOSA VAR HOLCIFORMIS	COASTAL HAIRGRASS	4.20 LBS/ACRE
ACHILLEA MILLIFOLIUM	WHITE YARROW	1.20 LBS/ACRE
ESCHSCHOLZIA CALIFORNICA	CALIFORNIA POPPY	1.20 LBS/ACRE
ARTEMISIA DOUGLASIANA	MUGWORT	.012 LBS/ACRE
JUNCUS EFFUCES	WIRE RUSH	0.60 LBS/ACRE

USE ONLY PURE LIVE SEED
SEED MIX SHALL BE APPLIED AT A MIN. RATE OF 39.72 POUNDS PER ACRE.

FERTILIZER SHALL BE A SLOW RELEASE ORGANIC MATERIAL SUCH AS BIOSOL 7-2-3 AT 1000 POUNDS PER ACRE.

FIBER SHALL BE INSTALLED AT A MINIMUM OF 500 POUNDS PER ACRE AND SHALL BE MIXED AND APPLIED WITH THE SEED AND FERTILIZER

CLEAN BEDDING STRAW (RICE STRAW PREFERRED) SHALL BE EVENLY SPREAD ACROSS THE SITE FOLLOWING SEEDING. THE STRAW SHALL BE APPLIED AT A RATE OF ONE (1) TON PER ACRE.

FOLLOWING THE SPREADING OF THE STRAW, AN ORGANIC TACKIFIER, SUCH AS M-BINDER, SHALL BE SPRAYED OVER THE STRAW USING THE TECHNIQUES AND APPLICATION RATE SPECIFIED BY THE MANUFACTURER. THE BINDER SHALL BE APPLIED AT A RATE OF 100 POUNDS PER ACRE.

WATER SHALL BE OF THE QUALITY SUITABLE FOR AGRICULTURAL USE. ADHESIVE SHALL BE "SENTINEL" OR APPROVED EQUAL.

PLANT NOTES:

1. THE CONTRACTOR SHALL VERIFY PLANT QUANTITIES FROM THE PLANTING PLAN. QUANTITIES SHOWN IN THE LEGEND ARE FOR CONVENIENCE ONLY.
2. NOTIFY THE LANDSCAPE ARCHITECT IMMEDIATELY IN THE EVENT OF ANY DISCREPANCIES BETWEEN ACTUAL SITE CONDITIONS AND THE PLANTING PLAN.
3. PLANT GROUNDCOVER IN SHRUB AREAS AS NOTED: USE TRIANGULAR SPACING.
4. S14 — INDICATES PLANT KEY; 3 — INDICATES PLANT QUANTITY
5. SEE DETAIL AND SPECIFICATION SHEETS FOR ADDITIONAL INFORMATION.
6. THERE WILL BE NO MATERIALS OR PLANT MATERIALS SUBSTITUTIONS WITHOUT APPROVAL OF THE OWNER OR THE LANDSCAPE ARCHITECT.
7. ALL SLOPES PLANTED WITH LAWN NOT TO EXCEED A 3:1 SLOPE. ALL SLOPES PLANTED WITH GROUND COVER NOT TO EXCEED A 2:1 SLOPE.
8. PROVIDE POSITIVE DRAINAGE AWAY FROM ALL BUILDINGS (2% MIN)
9. IN THE EVENT OF ANY DISCREPANCIES BETWEEN THIS PLAN AND ACTUALL SITE CONDITIONS, THE LANDSCAPE ARCHITECT IS TO BE NOTIFIED IMMEDIATELY.
10. ENTIRE SITE IS TO BE ROUGH GRADED BY THE GRADING CONTRACTOR TO WITHIN 1/10 FOOT OF FINISH GRADE. LANDSCAPE CONTRACTOR IS TO FINE GRADE ALL LANDSCAPE AREAS.
11. ALL SITE UTILITIES ARE TO BE PROTECED DURING CONSTUCTION. IN THE EVENT OF CONFLICT BETWEEN THE PLANS AND UTILITIES THE CONTRACTOR SHALL NOTIFY THE LANDSCAPE ARCHITECT. ANY DAMAGE TO UTILITIES, STRUCTURES, OR OTHER FEATURES TO REMAIN, AND CAUSED BY THE LANDSCAPE CONTRACTOR SHALL BE REPLACED OR REPAIRED BY THE CONTRACTOR AT NO EXPENSE TO THE OWNER.
12. THE WORK IN THESE DRAWINGS AND SPECIFICATIONS MAY RUN CONCURRENTLY WITH WORK BY OTHERS. THE LANDSCAPE CONTRACTOR SHALL COORDINATE HIS WORK WITH OTHER CONRACTORS.
13. REFER TO CIVIL ENGINEER'S PLAN FOR OVERALL SITE GRADING AND DRAINAGE.
14. PRIOR TO ANY DIGGING, CALL UNDERGROUND SERVICE ALERT 1.800.642.2444.
15. The planting for the grassy-swales are as follows:

    Alameda Bio Swale Mix 32 PLS lbs./acre:

    PLS lbs./Acre Species
    13 Hordeum brachyantherum, 'Meadow Barley'
    10 Festuca rubra 'Molate' - Molate Fescue
    4.5 Deschampsia caespitosa, 'Holciformis' - Pacific Tufted Hairgrass
    1.5 Juncus patens, Valley Rush
    0.5 Juncus occidentalis, Western Rush
    1.5 Scirpus robusta, Bulrush
    1.0 Carex barbarea, Santa Barbara Sedge

    The seed mixture is in conformance to 1999 Edition of "Start at The Source - Design Guidance Manual for Stormwater Quality Protection" published by Bay Area Stormwater Management Agencies Association. The hydro-seeding will take place in late summer or fall and not require irrigation after the end of the maintenance period. The maintenance period shall be 365 days. A longer period may be required to establish acceptable thriving plants and vigorous growth of the grass.

BIKE RACK NOTES

BIKE RACK BY 'HI-ROLLER' (H14H) - DERO HI ROLLER - 2 RACKS 6 BIKES PER RACK
FINISH - (STAINLESS STEEL - SATIN FINISH)
FOLLOW MANUFACTURES INSTALLATION INSTRUCTIONS.
1-800-238-4515

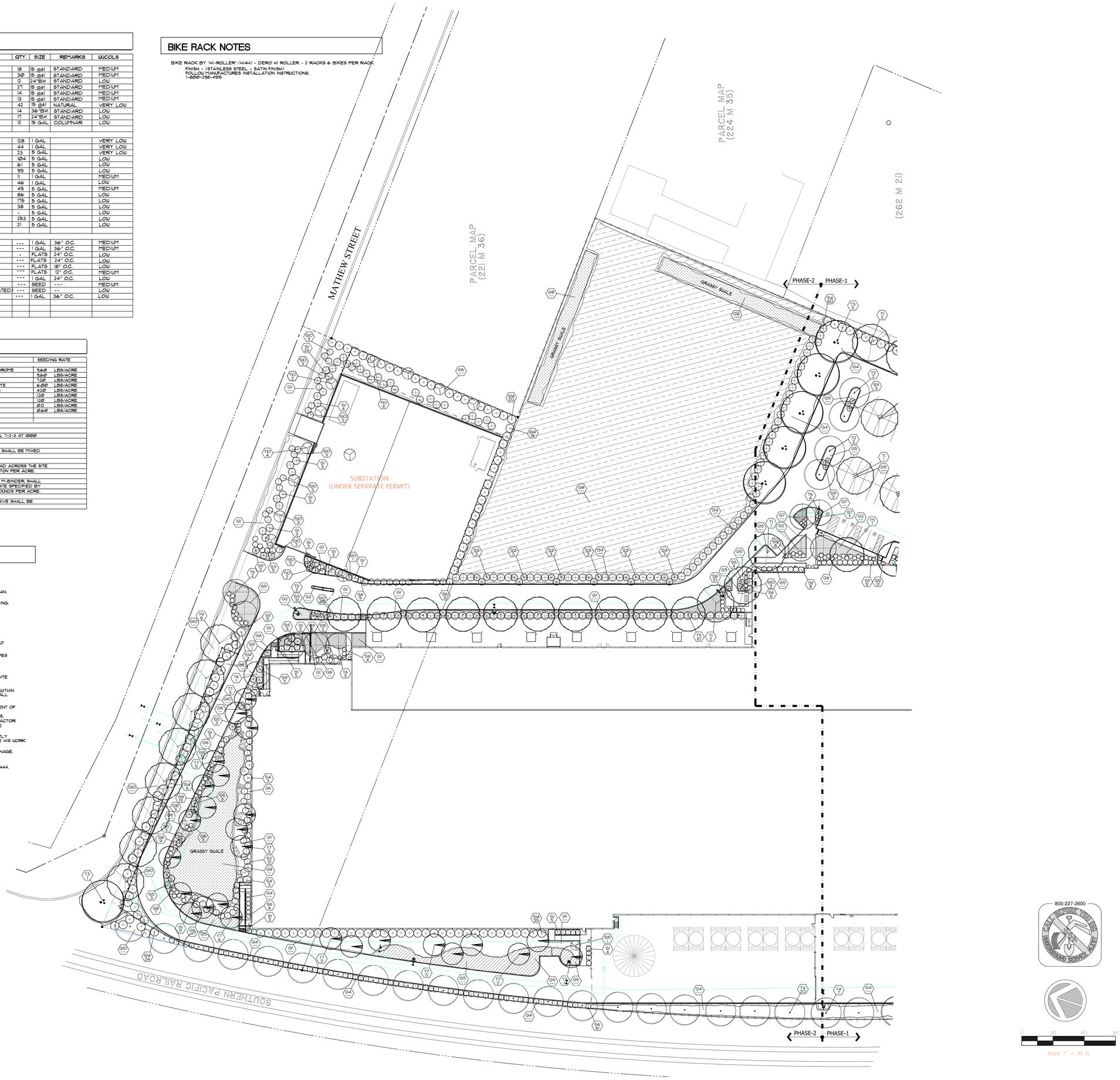

CCG
FACILITIES INTEGRATION INCORPORATED

NO.	DATE	REVISION
	27/11/10	sbwr-irrigation
	12/13/10	irrigation rev.
	01/26/2011	bulletin #10
	03/02/2011	tree revisions
	03/11/2011	street tree adj.
6	03/21/2011	reclaimed water adj.
	5/11/11	bulletin 13

07.17.10 PROGRESS
5/23/08 DD PROGRESS

NO.	DATE	ISSUE

DuPont Fabros

SC-1
DATA CENTER SANTA CLARA

CCG
FACILITIES INTEGRATION
INCORPORATED
1500 S. EDGEWOOD STREET
BALTIMORE, MARYLAND 21227
(410)525-0010 FAX (410)525-1570

© 2006 ALL RIGHTS RESERVED

DVA
DONNALLY VUICIC ASSOCIATES, L.L.C.
architecture ■ planning ■ interiors
400 Professional Drive, Suite 200
Gaithersburg, MD 20879
301-590-8900 ■ Fax 301-590-8620 ■
Email: dva-arch.com

REED ASSOCIATES
LANDSCAPE ARCHITECTURE
1000 SOUTH BAYSHORE DR.
SUNNYVALE, CALIFORNIA 94086
408.481.9020 / 408.481.9022 FAX
web: www.rdla.net / email: jay@rdla.net

REGISTERED LANDSCAPE ARCHITECT
PAUL JAY REED
No. 2002
EXP. 9/30/11
STATE OF CALIFORNIA

SEAL

PLANTING PLAN

TITLE

L2.0

DRAWING NO.

A.00604	pjr
PROJECT NO.	DESIGNED BY
--	dgs
TILE	DRAWN BY
1"=30'	pjr
SCALE	APPROVED BY

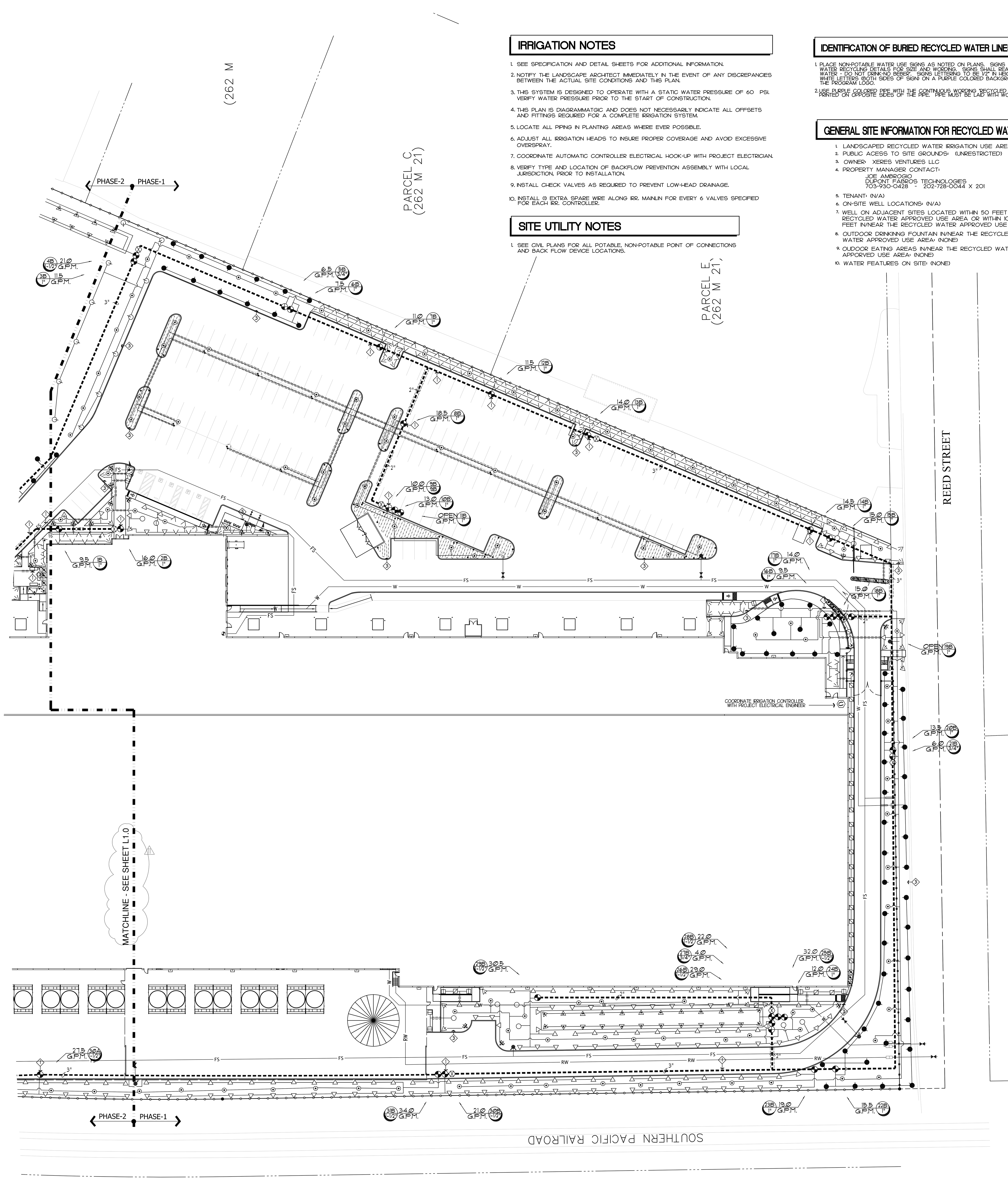

IRRIGATION NOTES

1. SEE SPECIFICATION AND DETAIL SHEETS FOR ADDITIONAL INFORMATION.
2. NOTIFY THE LANDSCAPE ARCHITECT IMMEDIATELY IN THE EVENT OF ANY DISCREPANCIES BETWEEN THE ACTUAL SITE CONDITIONS AND THIS PLAN.
3. THIS SYSTEM IS DESIGNED TO OPERATE WITH A STATIC WATER PRESSURE OF 60 PSI. VERIFY WATER PRESSURE PRIOR TO THE START OF CONSTRUCTION.
4. THIS PLAN IS DIAGRAMMATGIC AND DOES NOT NECESSARILY INDICATE ALL OFFSETS AND FITTINGS REQUIRED FOR A COMPLETE IRRIGATION SYSTEM.
5. LOCATE ALL PIPING IN PLANTING AREAS WHERE EVER POSSIBLE.
6. ADJUST ALL IRRIGATION HEADS TO INSURE PROPER COVERAGE AND AVOID EXCESSIVE OVERSPRAY.
7. COORDINATE AUTOMATIC CONTROLLER ELECTRICAL HOOK-UP WITH PROJECT ELECTRICIAN.
8. VERIFY TYPE AND LOCATION OF BACKFLOW PREVENTION ASSEMBLY WITH LOCAL JURISDICTION, PRIOR TO INSTALLATION.
9. INSTALL CHECK VALVES AS REQUIRED TO PREVENT LOW-HEAD DRAINAGE.
10. INSTALL (1) EXTRA SPARE WIRE ALONG IRR. MAINLIN FOR EVERY 6 VALVES SPECIFIED FOR EACH IRR. CONTROLLER.

SITE UTILITY NOTES

1. SEE CIVIL PLANS FOR ALL POTABLE, NON-POTABLE POINT OF CONNECTIONS AND BACK FLOW DEVICE LOCATIONS.

IDENTIFICATION OF BURIED RECYCLED WATER LINES / SIGNS

1. PLACE NON-POTABLE WATER USE SIGNS AS NOTED ON PLANS. SIGNS SHALL CONFORM TO SOUTH BAY WATER RECYCLING DETAILS FOR SIZE AND WORDING. SIGNS SHALL READ 'IRRIGATED WITH RECYCLED WATER - DO NOT DRINK-NO BEBER'. SIGNS LETTERING TO BE 1/2" IN HEIGHT IN BLACK OR WHITE LETTERS (BOTH SIDES OF SIGN) ON A PURPLE COLORED BACKGROUND AND INCLUDE THE PROGRAM LOGO.
2. USE PURPLE COLORED PIPE WITH THE CONTINUOUS WORDING 'RECYCLED WATER-DO NOT DRINK' PRINTED ON OPPOSITE SIDES OF THE PIPE. PIPE MUST BE LAID WITH WORKDING FACING UPWARDS.

GENERAL SITE INFORMATION FOR RECYCLED WATER USE

1. LANDSCAPED RECYCLED WATER IRRIGATION USE AREA: (184,926 S.F.)
2. PUBLIC ACESS TO SITE GROUNDS: (UNRESTRICTED)
3. OWNER: XERES VENTURES LLC
4. PROPERTY MANAGER CONTACT:
   JOE AMBROGIO
   DUPONT FABROS TECHNOLOGIES
   703-930-0428 - 202-728-0044 X 201
5. TENANT: (N/A)
6. ON-SITE WELL LOCATIONS: (N/A)
7. WELL ON ADJACENT SITES LOCATED WITHIN 50 FEET OF RECYCLED WATER APPROVED USE AREA OR WITHIN 100 FEET IN/NEAR THE RECYCLED WATER APPROVED USE AREA: (NONE)
8. OUTDOOR DRINKINNG FOUNTAIN IN/NEAR THE RECYCLED WATER APPROVED USE AREA: (NONE)
9. OUDOOR EATING AREAS IN/NEAR THE RECYCLED WATER APPORVED USE AREA: (NONE)
10. WATER FEATURES ON SITE: (NONE)

IRRIGATION LEGEND

KEY	DESCRIPTION
P.O.C.	POINT OF CONNECTION (CONNECT NEW RECYLED IRR. MAINLINE TO RECYCLED IRR. WATER METER)
	RECYCLED IRRIGATION WATER METER TO BE PROVIDED BY OTHERS.
	IF STATIC PRESSURE AT WATER METER EXCEEDS 120 PSI - USE SCH 40 STEEL PIPE FROM
	IRRIGATION METER TO IRRIGATION B.F.P. (SIZE AS NOTED ON PLANS)
	SCHEDULE 40 - or- CLASS 315 PVC PRESSURE MAINLINE (SIZE AS NOTED)
	SCHEDULE 40 PVC NON-PRESSURE SLEEVE UNDER PAVEMENT (2X SIZEINSIDE PIPE)
	CLASS 200 PVC NON-PRESSURE LATERAL LINE (SIZE AS NOTED)
1 / 1"	INDICATES CONTROLLER STATION #
	INDICATES VALVE SIZE
A	TORO - INTELLI-SENSE IRRIGATION CONTROLLER (TIS-48-OD)
	TORO - TMR-1 TORO MAINTENANCE REMOTE
C	TORO - TFS-300 FLOW SENSOR
	TORO - TWRS - WIRED RAIN SENSOR
MC	MASTER CONTROL VALVE - 'SUPERIOR' 3100.2100 SERIES - BRASS VALVE
FS	TORO - TFS-300 FLOW SENSOR
	'HUNTER' - HQ-44-R QUICK COUPLER (RECLAIMED AND PROVIDE LOCKING KEYS)
	'IRRITROL' 700 SERIES "ULTRA-FLOW" - ELECTRIC VALVE - (SIZE AS NOTED).
	RW60-KIT (RECLAIMED WATER KIT)
	'IRRITROL' 700 SERIES "ULTRA-FLOW" - ELECTRIC VALVE - (SIZE AS NOTED). TREE BUBBLERS ONLY
	RW60-KIT (RECLAIMED WATER KIT)

KEY	DESCRIPTION		
	HUNTER	MP2000-Q (20'R-0.4 GPM-40PSI)	12" SHRUB POP-UP-STREAM ROTOR
		INST-12-CVR-MP2000	
	HUNTER	MP2000-H (19'R-0.74 GPM-40PSI)	12" SHRUB POP-UP-STREAM ROTOR
		INST-12-CVR-MP2000	
	HUNTER	MP2000-F (19'R-1.47 GPM-40PSI)	12" SHRUB POP-UP-STREAM ROTOR
		INST-12-CVR-MP2000	
	HUNTER	MPCORNER-45d (14'R-0.19 GPM-40PSI)	12" SHRUB POP-UP-STREAM ROTOR
		INST-12-CVR-MP2000	
	HUNTER	PGH-ARV-01 (Q-29'R-0.6 GPM)	12" SHRUB POP-UP-ROTOR
	HUNTER	PGH-ARV-02 (T-30'R-0.8 GPM)	12" SHRUB POP-UP-ROTOR
	HUNTER	PGH-ARV-03 (H-31'R-1.0 GPM)	12" SHRUB POP-UP-ROTOR
	HUNTER	PGH-ARV-04 (TT-33'R-1.4 GPM)	12" SHRUB POP-UP-ROTOR
	HUNTER	PGH-ARV-06 (F-38'R-2.4 GPM)	12" SHRUB POP-UP-ROTOR
	HUNTER	INST-12-CV-R-12Q (0.63 GPM)	12" SHRUB POP-UP SPRAY
	HUNTER	INST-12-CV-R-12H (1.31 GPM)	12" SHRUB POP-UP SPRAY
	HUNTER	INST-06-CV-R-12A (45deg-0.32 GPM)	6" SHRUB POP-UP SPRAY-ADJUSTABLE ARC
	HUNTER	INST-06-CV-R-12Q (0.63 GPM)	6" SHRUB POP-UP SPRAY
	HUNTER	INST-06-CV-R-12H (1.31 GPM)	6" SHRUB POP-UP SPRAY
	HUNTER	INST-06-CV-R-12A (T/TT-0.84-1.68 GPM)	6" SHRUB POP-UP SPRAY-ADJUSTABLE ARC
	HUNTER	INST-06-CV-R-12F (1.77 GPM)	6" SHRUB POP-UP SPRAY
	HUNTER	INST-06-CV-R-8A (45DEG-0.25 GPM)	6" SHRUB POP-UP SPRAY-ADJUSTABLE ARC
	HUNTER	INST-06-CV-R-8Q (0.24 GPM)	6" SHRUB POP-UP SPRAY
	HUNTER	INST-06-CV-R-8H (0.48 GPM)	6" SHRUB POP-UP SPRAY
	HUNTER	INST-06-CV-R-8A-T/TT (.065-1.31 GPM)	6" SHRUB POP-UP SPRAY-ADJUSTABLE ARC
	HUNTER	INST-06-CV-R-8F (0.95 GPM)	6" SHRUB POP-UP SPRAY
	HUNTER	INST-06-CV-R-4Q (0.22 GPM)	6" SHRUB POP-UP SPRAY
	HUNTER	INST-06-CV-R-4H (0.44 GPM)	6" SHRUB POP-UP SPRAY
	HUNTER	INST-06-CV-R-2H (0.16-GPM)	6" SHRUB POP-UP SPRAY
	HUNTER	INST-06-CV-R-LCS-515 (0.6-GPM)	6" SHRUB POP-UP SPRAY
	HUNTER	INST-06-CV-R-RCS-515 (0.6-GPM)	6" SHRUB POP-UP SPRAY
	HUNTER	INST-06-CV-R-SS-530 (1.2-GPM)	6" SHRUB POP-UP SPRAY
	TORO	FB-25-PC	FLOOD BUBBLER ON FLEXI-RISER
	HUNTER	INST-06-CV-R-5-CST-B (0.38-GPM)	6" POP-UP STREAM BUBBLER
	RAINBIRD	XFS-09-18-500	0.9 GPH DRIPLINE AT 18" SPACING
		XCZ-100-PRB-COM	CONTROL ZONE/FILTER KIT - 1" MAX. FLOW OF 20.0 GPM
			(SEE IRRIGATION DETAILS FOR ADDITIONAL INFORMATION
			INSTALL PER MANUFACTURER'S SPECIFICATIONS)

IRRIGATION NOTES LEGEND

1. LOCATE IRRIGATION MAINLINE AND IRRIGATION VALVES IN LANDSCAPE AREAS. ALL IRRIGATION VALES TO BE LOCATED IN SPECIFIED VALVES BOX IN SHRUB PLANTING AREAS ONLY.
2. HAND TRENCH ALL IRRIGATION MAINLINE AND LATERAL LINES LOCATED NEAR EXISTING TREE ROOT ZONES.
3. CITY OF SANTA CLARA RECYCLED WATER INDICATION SIGNS LOCATION.

POTABLE/NON-POTABLE WATER PIPE SEPARATION CHART

HORIZONTAL SEPARATION - PRESSURIZED RECYCLES WATER / POTABLE WATER			
LESS THAN 1'	1' - 4'	4' - 10'	GREATER THAN 10'
NOT ALLOWED	NOT ALLOWED	SOLVENT WELDED PVC ON RECYCLED WATER SYSTEM RESTRAINED PVC PIPE FOR RECYCLED OR POTABLE IF LARGER THAN 4" RESTRAINED DUCTILE IRON PIPE ON RECYCLED WATER SYSTEM. SOLDERED COPPER PIPE ON RECYCLED WATER SYSTEM SLEEVE POTABLE PIPE SLEEVE RECYCLED PIPE	NO SPECIAL CONSTRUCTION REQ'D.
HORIZONTAL SEPARATION - NON-PRESSURIZED RECYCLED WATER / POTABLE WATER			
LESS THAN 1'	1' - 4'	4' - 10'	GREATER THAN 10'
NOT ALLOWED	NO SPECIAL CONSTRUCTION REQ'D.	NO SPECIAL CONSTRUCTION REQ'D.	NO SPECIAL CONSTRUCTION REQ'D.
VERTICAL SEPARATION - PRESSURIZED RECYCLED WATER / POTABLE WATER			
< 1' UNDER POTABLE	≥ 1' UNDER POTABLE	< 1' OVER POTABLE	≥ 1' OVER POTABLE
NOT ALLOWED	NO SPECIAL CONSTRUCTION REQ'D.	NOT ALLOWED	DEPTH OF COVER REQUIREMENT HAS TO BE SATISFIED. A FULL STANDARD PIPE LENGTH IS CENTERED OVER THE CROSSING, OR THE RECYCLED PIPE IS SLEEVED FOR THE SAME LENGTH
VERTICAL SEPARATION - NON-PRESSURIZED RECYCLED WATER / POTABLE WATER			
< 1' UNDER POTABLE	≥ 1' UNDER POTABLE	< 1' OVER POTABLE	≥ 1' OVER POTABLE
NOT ALLOWED	NO SPECIAL CONSTRUCTION REQ'D.	NOT ALLOWED	NO SPECIAL CONSTRUCTION REQ'D.

GENERAL IRRIGATION NOTES

1. WARNING TAGS SHALL BE INSTALLED ON ALL NON-POTABLE WATER SYSTEM EQUIPMENT, SUCH AS EXPOSED PIPING, METER, ALL VALVES ETC.
2. IRRIGATION SYSTEM SHALL BE INSTALLED TO PREVENT RUN-OFF AND PONDING. OVERSPRAY OR WIND DRIFT OF NON-POTABLE WATER TO PUBLIC AREAS IS NOT PERMITTED (SIDEWALKS, PARKING AREAS, EATING AREAS ETC.)
3. HOSE BIBBS SHALL NOT BE USED ON THE NON-POTABLE WATER SYSTEM.
4. ANY AND ALL CONNECTIONS BETWEEN THE POTABLE AND NON-POTABLE PIPING SYSTEMS ARE PROHIBITED.
5. NOTIFY THE PUBLIC WORKS INSPECITON AT LEAST 48 HOURS PRIOR TO: 1) BACKFILL OF PIPE TRENCHES, 2) PRESSURE TEST, AND 3) COVERAGE TEST.
6. CERTIFICATE OF SUBSTANTIAL COMPLETION (PART OF WATER EFFICIENT LANDSCAPE REQD') SHALL BE SUBMITTED TO THE CITY BUILDING INSPECTOR PRIOR TO FINAL OCCUPANCY.
7. IDENTIFICATION FOR NON-POTABLE WATER APPLIES TO ALL PIPES INCLUDING MAINLINES AND LATERALS. QUICK COUPLING VALVES SHALL HAVE PURPLE LOCKING LIDS. ALL VALVES SHALL BE INSTALLED IN PURPLE VALVE BOXES. DEPTH OF COVER SHALL BE AT LEAST 24" FOR MAINLINES OF 3" DIA. INCHES OR GREATER, AND 18" FOR MAINLINES WITH A DIAMETER OF LESS THAN 3".
8. A MINIMUM OF TEN FEET HORIZONTAL SEPARATION BETWEEN POTABLE AND NON-POTABLE WATER PIPING IS REQUIRED. AT CROSSINGS, NON-POTABLE CONSTANT PRESSURE (MAINS) PIPES AND SANITARY SEWER LINES SHALL BE AT LEAST TWELVE INCHES BELOW PIPES WITHIN A TEN FOOT HORIZONTAL DISTANCE. NON-POTABLE INTERMITTENT PRESSURE (LATERALS) PIPING MAY CROSS ABOVE POTABLE WATER LINES WITH A MIN. OF TWELVE INCHES CLEARANCE.
9. WHERE PIPE SLEEVES ARE USED, EITHER THE SLEEVE OR INTERIOR PIPE MUST BE IDENTIFIED AS RECYCLED WATER. IDENTIFICATION TAPE OR PURPLE COLORED PIPE IS PERMITTED ON THE SLEEVE. PURPLE COLORED PIPE IS PERMITTED FOR THE INTERIOR PIPE (TAPE IS NOT ALLOWED ON THE INTERIOR PIPE).
10. PURPLE PIPE SHALL NOT BE STORED WHERE EXPOSED TO SUNLIGHT.
11. MAINLINE, QUICK COUPLERS AND VALVE BOX AND PIPING SHALL HAVE RECLAIMED WATER COLOR SYMBOL AND WARNING.
12. THIS IRRIGATION SYSTEM SHALL MEET ALL CITY REQUIREMENTS FOR RECLAIMED WATER MARKINGS.

IRRIGATION PIPE SIZING CHART

SCHEDULE 40

1"	==	9-16 GPM
1-1/4"	==	16-22 GPM
1-1/2"	==	23-30 GPM

CLASS 315

2"	==	31-48 GPM
2-1/2"	==	49-65 GPM
3"	==	66-100 GPM

CLASS 200

1/2"	==	0-4 GPM
3/4'	==	5-9 GPM
1"	==	10-16 GPM
1-1/4"	==	17-26 GPM
1-1/2"	==	27-35 GPM
2"	==	36-55 GPM

South Bay Water Recycling	Date
City of Santa Clara	Date
California Department of Public Health	Date

0 30 60 90
Scale 1" = 30 ft.

800-227-2600

FACILITIES INTEGRATION INCORPORATED

NO.	DATE	REVISION
	27/11/10	sbwr-irrigation
	12/13/10	irrigation rev.
	01/26/2011	bulletin #10
	03/02/2011	tree revisions
	03/11/2011	street tree adj.
11	03/21/2011	reclaimed water adj.
	5/11/11	bulletin 13

NO.	DATE	ISSUE
	07.17.10	PROGRESS
	5/23/08	DD PROGRESS

DUPONT FABROS

SC-1 DATA CENTER SANTA CLARA

CCG
FACILITIES INTEGRATION
INCORPORATED
1500 S. EDGEWOOD STREET
BALTIMORE, MARYLAND 21227
(410)525-0010 FAX (410)525-1570

© 2006 ALL RIGHTS RESERVED

DVA
DONNALLY VUJCIC ASSOCIATES, L.L.C.
architecture ■ planning ■ interiors
400 Professional Drive, Suite 200
Gaithersburg, MD 20879
301-590-8900 ■ Fax 301-590-8620 ■
Email: dva-arch.com

REED ASSOCIATES
LANDSCAPE ARCHITECTURE
477 SOUTH TAAFFE STREET
SUNNYVALE, CALIFORNIA 94086
408.481-9020 / 408.481-9022 FAX
web: www.rala.net / email: paul@rala.net

REGISTERED LANDSCAPE ARCHITECT
PAUL JAY REED
No. 2002
EXP. 9/30/11
STATE OF CALIFORNIA
SEAL

LANDSCAPE IRRIGATION PLAN
TITLE

L1.1
DRAWING NO.

A.00604	pjr
PROJECT NO.	DESIGNED BY
----	dgs
FILE	DRAWN BY
1'=30'	pjr
SCALE	APPROVED BY

Appendix L

Geotechnical Observations (2011)

CORNERSTONE
EARTH GROUP

Date:	July 20, 2011
Project No.:	194-1-3
Prepared For:	Mr. Bob Berlinsky **XERES VENTURES** c/o Dupont Fabros Technology 1212 New York Avenue, NW, Suite 900 Washington, District of Columbia, 20005
Re:	Geotechnical Observation and Testing Services Santa Clara Data Center 555 Reed Street Santa Clara, California

Introduction

In this letter we summarize the results of our geotechnical observation and testing services at the referenced development. We previously performed a geotechnical investigation for the development and presented the results in our January 15, 2008 report titled, "Santa Clara Data Center, 555 Reed Street, Santa Clara, California." As you know, we have also provided geotechnical observation and testing services during construction, which occurred in two construction periods separated by an "economic" shutdown of construction between about October 2008 and June 2010. Originally the project was designed as two Phases of construction, and included an electrical substation. After the construction shutdown, it was decided to construct both phases and the electrical substation at the same time.

Project Description

The project site is located at 555 Reed Street in Santa Clara, California. As previously described, the data center was originally to be constructed in two phases; however, both phases and the electrical substation were all constructed concurrently. The majority of the data center building was a high-bay steel structure with a portion of the building to be two stories. An electrical sub-station, appurtenant utilities, cooling towers, fuel tanks, and other improvements for operations and those necessary for site development were also constructed.

Earthwork Recommendations

As referenced below, compaction tests were determined relative to the maximum dry density and optimum moisture content established by ASTM Test Designation D1557, latest edition. A general summary of the earthwork recommendations for the project from our January 15, 2008 report and the project plans and specifications are as follows:

1. Site clearing, including stripping of surface vegetation, designated trees and shrubs and associated roots, removal of pavements and abandoned utility lines.

2. Compacting fill as well as scarified surface soils in those areas to receive fill or slabs-on-grade to at least 90 percent relative compaction at a moisture content at least 1 percent above laboratory optimum moisture content, except for expansive clay soils which were

to be compacted to between 87 to 92 percent relative compaction at a moisture content at least 3 percent over optimum.

3. Compaction of fill material for utility trench backfill to at least 90 percent relative compaction at a moisture content at least 1 percent above laboratory optimum moisture content, except for expansive clay soils which were to be compacted to between 87 to 92 percent relative compaction at a moisture content at least 3 percent over optimum.

4. Installation of Auger Pressure Grouted Displacement (APGD) piles in accordance with the recommendations in our geotechnical report and the project plans.

5. Compaction of the upper 6 inches of pavement subgrade to at least 95 percent relative compaction at a moisture content at least 1 percent above laboratory optimum moisture content, except for expansive clay soils which were to be compacted to between 87 to 92 percent relative compaction at a moisture content at least 3 percent over optimum.

6. Compaction of the pavement aggregate base to at least 95 percent relative compaction at a moisture content slightly above laboratory optimum moisture.

7. Compaction of asphalt concrete to at least 95 percent relative compaction.

8. Compaction of the upper 6 inches of exterior flatwork subgrade to at least 90 percent relative compaction at a moisture content at least 1 percent above laboratory optimum moisture content, except for expansive clay soils which were to be compacted to between 87 to 92 percent relative compaction at a moisture content at least 3 percent over optimum.

9. Compaction of the flatwork aggregate base to at least 90 percent relative compaction at a moisture content slightly above laboratory optimum moisture content.

Scope of Services

Our geotechnical observation and testing services began June 20, 2008 and included mass grading, utility installation, and Auger Pressure Grouted Displacement Pile (APGD) installation, which lasted until October 23, 2008, at which time construction on site was halted. Some utility work to extend active building permits occurred between April 7, 2009 and April 9, 2009. Full project construction resumed in June of 2010. Our geotechnical observation and testing services resumed on June 10, 2011 and included observation and testing of mass grading, APGD pile installation, utility backfill, foundation excavations, pavements, and flatwork. Our services continued until April 25, 2011, the date of our last requested site visit. The scope of our construction observation and testing services for geotechnical aspects of this project included a combination of part- and full-time observation and testing on an on-call basis as set forth in our agreement with you. A general list of construction work involving our geotechnical engineering services is presented below.

1. Site clearing and demolition, including stripping of surface vegetation, designated trees and shrubs and associated roots, removal of foundations, slabs, and pavements, and abandoned utility lines.

2. Over-excavation and re-compaction of undocumented fill.

3. Fill placement and compaction as well as compaction of scarified subgrade soils in those areas to receive fill or slabs-on-grade.

4. Placement and compaction of non-expansive fill.

5. Placement and compaction of retaining wall backfill.

6. Placement and compaction of utility trench backfill.

7. Foundation excavation.

8. Installation of APGD piles.

9. Observation of vapor retarder system, including consolidation of crushed rock layer and placement of vapor retarder.

10. Unstable subgrade mitigation.

11. Pavement and flatwork subgrade preparation and compaction.

12. Placement and compaction of pavement and flatwork aggregate base.

13. Placement and compaction of asphalt concrete pavement.

Services Performed

During construction, we provided geotechnical observation services along with more than 3,000 periodic field density tests at various locations and elevations across the site, and the observation of 1030 piles in the data center, and 98 piles for the electrical substation. Our observations and field density test results were recorded in the Daily Field Reports (DFR), Nos. 1 through 247, for the period from August 15, 2008 through April 25, 2011. Laboratory testing consisted of 32 compaction curve tests, moisture content verification tests, one Atterberg Limit test, one set of Cal Trans Class 2 aggregate base specification tests, one asphalt concrete maximum density test, and a lime stability study. These tests were conducted for the various fill materials used at the site. Records of the field density tests and laboratory testing are kept in our files for a period of three years after completion of the project and are available for your review, if desired. Daily field reports have been transmitted to you and the contractor on a monthly basis for your records.

Meaning of "Observation"

"Observation", as used in this document, means that we observed the progress of the work on an intermittent basis, and performed tests on selected soil and rock materials. Our opinion about the general conformance of geotechnical aspects of construction to our recommendations and project plans and specifications is based on these observations and test results.

Our work is performed to provide an opinion regarding the work, and does not relieve the contractor of their primary responsibility to perform their work in accordance with the project plans and specifications.

Opinion

Based on our field observations and test results, it is our opinion that the geotechnical aspects of the construction for the project that we observed and tested have been performed in general conformance with our recommendations and the project plans and specifications. Below we note a couple of exceptions.

1. All sub-drains shown on project plans were eliminated in a project bulletin prior to construction.

2. Backfill of the fuel lines on top of the project-west and project-east fuel tanks were not performed in accordance with project specifications due to the complexity and congestion of the lines, as well as the sensitivity of the lines once in place. We understand that the fuel lines are a double-containment system with full-time leak monitoring, and any distress will be detected and repaired.

Closure

Our geotechnical services, including our professional opinions and conclusions, are made for the sole use of Xeres Ventures, in accordance with generally accepted soil and foundation engineering principles and practices in the San Francisco Bay Area at this time. However, we do not undertake the guarantee of any aspects of the construction that we observed and tested, nor do we relieve the contractor of his primary responsibility to produce a completed project conforming to the project plans and specifications. No warranties are either expressed or implied.

Should you have any questions, or if we can be of further service, please contact us at your earliest convenience.

Sincerely,

Cornerstone Earth Group, Inc.

C. Barry Butler, P.E., G.E.
Principal Engineer

Ron A. Massone
Principal, Construction Services Manager

CBB:RAM:spm

Copies: Addressee (1 by email)

Appendix M

Soil Stockpile Testing Results (2010-2011)

CORNERSTONE EARTH GROUP

Date:	September 23, 2010
Project No.:	194-1-3
Prepared For:	Mr. Mike O'Connor **HOLDER CONSTRUCTION** 555 Reed Street Santa Clara, California
Re:	Stockpile Sampling and Laboratory Analyses Santa Clara Data Center 500, 504 and 520 Mathew Street and 535 and 555 Reed Street Santa Clara, California

Dear Mr. O'Connor:

Per your request, this letter summarizes the analytical testing performed on an approximately 10,000 to 12,000 cubic yard soil stockpile located at 500, 504 and 520 Mathew Street and 535 and 555 Reed Street in Santa Clara, California (Site). The stockpiled soil reportedly was generated during on-Site earthwork for the construction of a one-story, high-bay, steel-framed data center facility.

Project Background

The approximately 9-acre Site is located between Mathew Street and Reed Street, bordering the Union Pacific Railroad tracks and just west of De La Cruz Boulevard in Santa Clara, California.

Hazardous materials associated with prior Site activities have been detected in soil and ground water beneath the Site. Investigation and cleanup of the hazardous materials has been performed under the oversight of the Santa Clara County Water District (SCVWD), the Santa Clara Fire Department (SCFD) and the California Regional Water Quality Control Board (CRWQCB). These agencies have required no further action for Site investigation and cleanup. Based on our review of the provided documents, known contaminants of potential concern (COPC) consist of petroleum hydrocarbons (associated with prior fuel and waste oil storage in underground storage tanks) and pentachlorophenol (associated with prior lumber treatment).

Purpose

We understand that there is an approximately 10,000 to 12,000 cubic yard stockpile located at the Site. The purpose of this scope of work was to evaluate the quality of soil currently stockpiled. We understand that this material is planned for landfill disposal.

Environmental Services

A staff geologist under the supervision of a California registered Professional Geologist collected 40 soil samples from the stockpile at a variety of different depths using hand sampling equipment on September 17, 2010. Soil samples were obtained by manually pushing a 1½-diameter by 6-inch stainless steel sampling tube into freshly exposed soil in the stockpile. The ends of the liners were covered in Teflon film, fitted with plastic end caps, taped, and labeled with a unique identification number. The samples were then placed in an ice-chilled cooler and transported to a state-certified analytical laboratory (Torrent Laboratory, Inc.) with chain of custody documentation. The 40 samples were composited into 10 composite samples by the laboratory for analytical testing and analyzed for the following:

- EPA Test Method 8270C for Semi-VOCs, including PCP;
- EPA Method 8081A for organochlorine pesticides;
- EPA Method 6010B for California Assessment Manual 17 metals (CAM 17); and
- EPA Method 8015M/8021B for total petroleum hydrocarbons as diesel and motor oil with a silica gel cleanup.

At ten additional sampling locations, Core N One capsules (in triplicate) were used to sample and transport approximately 5 grams of soil per capsule for gasoline-range petroleum hydrocarbons and Volatile Organic Compound (VOC) analysis (EPA Test Method 8260B, full scan). Analytical datasheets are attached to this letter.

Screening Levels

The reported analytical data were compared to the California Human Health Screening Levels (CHHSLs) (Cal/EPA, January 2005 and May 2009). The CHHSLs are used to screen sites for potential human health concerns where releases of hazardous chemicals to soils have occurred. Under most circumstances, the presence of a chemical in soil, soil gas or indoor air at concentrations below the corresponding CHHSLs can be assumed not to pose a significant health risk. Please note that the San Francisco Regional Water Quality Control Board (Water Board 2008) has also developed Environmental Screening Levels (ESLs). The ESLs are a compilation of screening levels for not only risk to human health but a number of other environmental concerns. Per Cal/EPA guidance (January 2005), "The ESLs are intended for use only at sites overseen by that agency". If a CHHSL doesn't exist for a detected compound, Cal/EPA recommends using the Regional Screening Levels (RSLs) developed by the EPA (Region 9, 2009). In the event, there are no CHHSLs or RSLs available, such as for petroleum hydrocarbons, Cal/EPA allows the data to be compared to ESLs. In addition, naturally occurring background concentrations of metals, such as arsenic - amongst others, in soil may exceed their respective CHHSLs. Cal/EPA generally does not require cleanup of soil to below background concentrations. This issue is frequently encountered with arsenic. Thus, for the metals detected, these data also were compared to regional background levels (Scott, 1991).

Analytical Data

Analytical data for the detected compounds are summarized in Table 1 through Table 3 (attached). Please refer to the analytical datasheet also attached to this letter for complete details.

Conclusions

Based on our review of the provided documents, we conclude the following:

- Semi-Volatile Organic Compounds, including PCP, Total Petroleum Hydrocarbons as gasoline and Total Petroleum Hydrocarbons as diesel were not detected above laboratory detection limits.

- Metal concentrations appeared to represent background levels, although nickel appeared slightly elevated over natural background conditions (up to 145 parts per million [ppm]) in 1 of 10 composite samples. The reported nickel concentration in this sample (190 ppm) exceeded its residential and commercial ESLs (150 ppm) but not its residential and commercial CHHSLs (1,600 and 16,000 ppm, respectively) or its residential and commercial RSLs (1,500 and 20,000 ppm, respectively).

- Total Petroleum Hydrocarbons as motor oil were detected in 10 of 10 composite samples analyzed; however, 9 of 10 composite samples did not exceed the residential (unrestricted use) ESL. One composite sample exceeded the residential (unrestricted use) ESL (370 parts per million); this sample (520 parts per million) did not exceed the commercial ESL (2,500 parts per million).

- The analytical data reported for organochlorine pesticides did not exceed the residential (unrestricted use) CHHSL or the residential (unrestricted use) ESL.

- tert-Butanol, a VOC, was reported in 3 of 10 samples (up to 95 parts per billion). The residential (unrestricted use) RSL for N-Butanol is 6,100 parts per billion. Neither ESLs nor CHHSLs have been established for tert-Butanol or N-Butanol. No other VOCs were reported above laboratory detection limits. The source of the tert-Butanol is unclear but appears sporadically present at low concentrations. Please note that this data is not presented on the summary Tables 1 through 3.

In conclusion, based on the history of the Site and the attached analytical datasheets, in our opinion, this material appears acceptable for reuse at commercial properties or for disposal at a permitted landfill. This letter should be provided to the facility or property owner that will receive the soil; written approval to dispose of the soil should be obtained.

Limitations

Cornerstone Earth Group (Cornerstone) performed this investigation to support Holder Construction in evaluation of the above Site. Holder Construction understands that the extent of soil data obtained is based on the reasonable limits of time and budgetary constraints. In addition, the chemical information presented in this letter can change over time and is only valid at the time of this investigation and for the locations sampled. Cornerstone makes no warranty, expressed or implied, except that our services have been performed in accordance with the environmental principles generally accepted at this time and location. This letter, an instrument of professional service, was prepared for the sole use of Holder Construction and may not be reproduced or distributed without written authorization from Cornerstone. It is valid for 180 days.

We thank you for the opportunity to work with you on this important project. Should you have any questions regarding this letter, or if we may be of further service, please contact us at your convenience.

Sincerely,

Cornerstone Earth Group

Ron L. Helm, C.E.G., R.E.A.II
Principal Geologist

Copies: Addressee (1 by email)

CORNERSTONE EARTH GROUP

Table 1. Detected California Assessment Manual Metals in Soil by EPA Test Method 6010B (mg/Kg)

Sample ID		Sb	As	Ba	Cr	Co	Cu	Pb	Ni	Ag	V	Zn	Hg
SP-1 to 4		<5.0	4.5	340	47	10	24	7.0	72	1.0	38	50	0.18
SP-5 to 8		6.2	5.5	250	61	15	35	7.7	83	1.9	58	58	0.18
SP-9 to 12		<5.0	4.2	190	77	18	24	9.3	190	<1.0	35	47	0.17
SP-13 to 16		<5.0	7.2	220	49	11	32	8.2	67	<1.0	44	61	0.17
SP-17 to 20		<5.0	5.3	220	50	13	29	8.0	80	1.3	44	51	0.34
SP-21 to 24		<5.0	5.1	230	56	13	28	11	110	<1.0	42	58	0.23
SP-25 to28		<5.0	4.6	210	39	9.6	24	7.1	64	1.5	35	47	0.17
SP-29 to 32		<5.0	6.3	230	45	11	30	9.4	61	1.2	43	54	0.17
SP-33 to 36		<5.0	5.4	210	44	11	29	9.0	65	<1.0	39	53	0.16
SP-37 to 40		<5.0	3.7	300	48	12	26	8.9	85	<1.0	40	51	0.15
Residential[1]	CHHSL	30	0.07	5200	NE	660	3,000	80	1,600	380	530	23,000	18
Commercial[1]	CHHSL	380	0.24	63000	NE	3,200	38,000	320	16,000	4800	6,700	100,000	180
Residential[2]	RSL	31	0.39	15000	280	23	3,100	400	1,500	390	550	23,000	4.3
Industrial[2]	RSL	410	1.6	190000	1,400	300	41,000	800	20,000	5,100	7,200	310,000	24
Residential[3]	ESL	6.3	0.39	750	750[4]	40	230	200	150	20	16	600	1.3
Commercial[3]	ESL	40	1.6	1500	750[4]	80	230	750	150	40	200	600	10
Background Range[5]	N. CA	NE	0.2 to 5.5	NE	30.5 to 72.0	NE	23.8 to 47.5	6.8 to 16.1	46.4 to 101	NE	NE	47.7 to 82.8	NE
Maximum Detection[5]	N. CA	22	20	NE	170	NE	67	54	145	4.8	NE	120	1.3

Notes:

mg/Kg	Milligrams per kilogram (ppm, part per million)
<	Less than the Practical Quantitation Limit (PQL)
---	Not Analyzed
NE	Not Established
1	"Use of California Human Health Screening Levels (CHHSLs) in Evaluation of Contaminated Properties, CalEPA, January 2005 and May 2009
2	"Regional Screening Levels (RSL) for Chemical Contaminants at Superfund Sites", USEPA, April 2009
3	"Screening For Environmental Concerns at Sites with Contaminated Soil and Groundwater", Table A, San Francisco Bay Regional Water Quality Control Board, May 2008
4	Listed ESL is for Chromium III
5	"Background Metal Concentrations in Soil in Northern Santa Clara County, California", Christina M. Scott, December 1991

Table 2. Total Petroleum Hydrocarbons in Soil by EPA Test Methods 8015B (mg/Kg)

Sample ID		TPHmo
SP-1 to 4		360
SP-5 to 8		160
SP-9 to 12		72
SP-13 to 16		360
SP-17 to 20		520
SP-21 to 24		240
SP-25 to28		120
SP-29 to 32		310
SP-33 to 36		170
SP-37 to 40		29
Residential[3]	ESL	370
Commercial[3]	ESL	2,500

Notes:

mg/Kg	Milligrams per kilogram (ppm, part per million)
<	Less than the Practical Quantitation Limit (PQL)
3	"Screening For Environmental Concerns at Sites with Contaminated Soil and Groundwater", Table A, San Francisco Bay Regional Water Quality Control Board, May 2008

Table 3. Organochlorine Pesticides in Soil by EPA Test Method 8081A (µg/Kg)

Sample ID		4,4'-DDE	4,4'-DDD	4,4'-DDT	Dieldrin
SP-1 to 4		52	<80	<80	<80
SP-5 to 8		52	<80	<80	<80
SP-9 to 12		170	29	<50	<50
SP-13 to 16		110	<80	<80	<80
SP-17 to 20		95	<80	40	<80
SP-21 to 24		57	<80	<80	<80
SP-25 to28		150	19	89	12
SP-29 to 32		71	<80	33	<80
SP-33 to 36		140	<80	55	<80
SP-37 to 40		51	<20	<20	<20
Residential	CHHSL	1600	2300	1600	35
Commercial	CHHSL	6300	9000	6300	130
Residential	ESL	1700	2400	1700	34[6]
Commercial	ESL	4000	10000	4000	130[6]
Residential	RSL	1400	2000	1700	30
Industrial	RSL	5100	7200	7000	110

Notes:

µg/Kg	Micrograms per kilogram (ppb, part per million)
<	Less than the Practical Quantitation Limit (PQL)
6	Direct Exposure ESLs, Tables A-1and A-2

CORNERSTONE EARTH GROUP

Date:	October 11, 2010
Project No.:	194-1-3
Prepared For:	Mr. Mike O'Connor **HOLDER CONSTRUCTION** 555 Reed Street Santa Clara, California
Re:	Sampling of an Approximately 5,000 Cubic Yard Stockpile and Laboratory Analyses Santa Clara Data Center 500, 504 and 520 Mathew Street and 535 and 555 Reed Street Santa Clara, California

Dear Mr. O'Connor:

Per your request, this letter summarizes the analytical testing performed on an approximately 5,000 cubic yard soil stockpile located at 500, 504 and 520 Mathew Street and 535 and 555 Reed Street in Santa Clara, California (Site). The stockpiled soil reportedly was generated during on-Site earthwork for the construction of a one-story, high-bay, steel-framed data center facility.

Project Background

The approximately 9-acre Site is located between Mathew Street and Reed Street, bordering the Union Pacific Railroad tracks and just west of De La Cruz Boulevard in Santa Clara, California.

Hazardous materials associated with prior Site activities have been detected in soil and ground water beneath the Site. Investigation and cleanup of the hazardous materials has been performed under the oversight of the Santa Clara County Water District (SCVWD), the Santa Clara Fire Department (SCFD) and the California Regional Water Quality Control Board (Water Board). These agencies have required no further action for Site investigation and cleanup. Based on our review of the provided documents, known contaminants of potential concern (COPC) consist of petroleum hydrocarbons (associated with prior fuel and waste oil storage in underground storage tanks) and pentachlorophenol (associated with prior lumber treatment).

Purpose

The purpose of this scope of work was to evaluate the quality of soil currently stockpiled. We understand that this material is planned for landfill disposal.

Environmental Services

A staff geologist under the supervision of a California registered Professional Geologist collected 25 soil samples from the stockpile at a variety of different depths using hand sampling equipment on September 30, 2010. Soil samples were obtained by manually pushing a 1½-diameter by 6-inch stainless steel sampling tube into freshly exposed soil in the stockpile. The ends of the liners were covered in Teflon film, fitted with plastic end caps, taped, and labeled with a unique identification number. The samples were then placed in an ice-chilled cooler and transported to a state-certified analytical laboratory (Torrent Laboratory, Inc.) with chain of custody documentation. The 20 samples were composited into 5 composite samples by the laboratory for analytical testing and analyzed for the following:

- EPA Test Method 8270C for semi-VOCs, including PCP;
- EPA Method 8081A for organochlorine pesticides;
- EPA Method 6010B for California Assessment Manual 17 metals (CAM 17); and
- EPA Method 8015M/8021B for total petroleum hydrocarbons as diesel and motor oil with a silica gel cleanup.

At 5 additional sampling locations, Core N One (CNO) capsules (in triplicate) were used to sample and transport approximately 5 grams of soil per capsule for gasoline-range petroleum hydrocarbons and volatile organic compound (VOC) analysis (EPA Test Method 8260B, full scan). Analytical datasheets are attached to this letter.

Screening Levels

The reported analytical data were compared to the California Human Health Screening Levels (CHHSLs) (Cal/EPA, January 2005 and May 2009). The CHHSLs are used to screen sites for potential human health concerns where releases of hazardous chemicals to soils have occurred. Under most circumstances, the presence of a chemical in soil, soil gas or indoor air at concentrations below the corresponding CHHSLs can be assumed not to pose a significant health risk. Please note that the Water Board (2008) has also developed Environmental Screening Levels (ESLs). The ESLs are a compilation of screening levels for not only risk to human health but a number of other environmental concerns. Per Cal/EPA guidance (January 2005), "The ESLs are intended for use only at sites overseen by that agency". If a CHHSL doesn't exist for a detected compound, Cal/EPA recommends using the Regional Screening Levels (RSLs) developed by the EPA (Region 9, 2009). In the event, there are no CHHSLs or RSLs available, such as for petroleum hydrocarbons, Cal/EPA allows the data to be compared to ESLs. In addition, naturally occurring background concentrations of metals, such as arsenic - amongst others, in soil may exceed their respective CHHSLs. Cal/EPA generally does not require cleanup of soil to below background concentrations. This issue is frequently encountered with arsenic. Thus, for the metals detected, these data also were compared to regional background levels (Scott, 1991).

Analytical Data

Analytical data for the detected compounds are summarized in Table 1 through Table 3 (attached). Please refer to the analytical datasheet also attached to this letter for complete details.

Conclusions

Based on our review of the provided documents, we conclude the following:

- Volatile organic compounds, semi-volatile organic compounds (including PCP), total petroleum hydrocarbons as gasoline and total petroleum hydrocarbons as diesel were not detected above laboratory detection limits.
- Metal concentrations appeared to represent background conditions.
- Total petroleum hydrocarbons as motor oil were detected in 5 of 5 composite samples analyzed; however, these composite samples did not exceed the residential (unrestricted use) ESL.
- The analytical data reported for organochlorine pesticides did not exceed the residential (unrestricted use) CHHSL or the residential (unrestricted use) ESL.

In conclusion, based on the attached analytical datasheets, in our opinion, this material appears acceptable for unrestricted reuse. However, based on the history of the Site, we recommend that this soil be disposed at a permitted landfill or used at a commercial property. This letter should be provided to the facility or property owner that will receive the soil; written approval to dispose of the soil should be obtained.

Limitations

Cornerstone Earth Group (Cornerstone) performed this investigation to support Holder Construction in evaluation of the above Site. Holder Construction understands that the extent of soil data obtained is based on the reasonable limits of time and budgetary constraints. In addition, the chemical information presented in this letter can change over time and is only valid at the time of this investigation and for the locations sampled. Cornerstone makes no warranty, expressed or implied, except that our services have been performed in accordance with the environmental principles generally accepted at this time and location. This letter, an instrument of professional service, was prepared for the sole use of Holder Construction and may not be reproduced or distributed without written authorization from Cornerstone. It is valid for 180 days.

CORNERSTONE
EARTH GROUP

We thank you for the opportunity to work with you on this important project. Should you have any questions regarding this letter, or if we may be of further service, please contact us at your convenience.

Sincerely,

Cornerstone Earth Group

Ron L. Helm, C.E.G., R.E.A.II
Principal Geologist

Copies: Addressee (1 by email)

CORNERSTONE EARTH GROUP

Table 1. Detected California Assessment Manual Metals in Soil by EPA Test Method 6010B (mg/Kg)

Sample ID		Sb	As	Ba	Cr	Co	Cu	Pb	Ni	Se	Ag	V	Zn	Hg
SP-51 to5 4		5.3	5.2	500	63	11	34	8.8	55	<5.0	1.1	62	56	0.14
SP-55 to58		7.0	4.8	220	63	15	29	8.4	73	<5.0	4.5	57	56	0.22
SP-59 to 62		5.0	6.5	350	52	12	29	8.3	71	<5.0	1.8	50	55	0.20
SP-63 to 66		5.3	6.7	280	57	14	29	8.5	76	<5.0	2.3	50	54	0.21
SP-67 to 70		6.8	6.6	220	64	15	31	9.7	80	5.0	3.4	58	150	0.23
Residential[1]	CHHSL	30	0.07	5200	NE	660	3,000	80	1,600	380	380	530	23,000	18
Commercial[1]	CHHSL	380	0.24	63000	NE	3,200	38,000	320	16,000	4,800	4800	6,700	100,000	180
Residential[2]	RSL	31	0.39	15000	280	23	3,100	400	1,500	390	390	550	23,000	4.3
Industrial[2]	RSL	410	1.6	190000	1,400	300	41,000	800	20,000	5,100	5,100	7,200	310,000	24
Residential[3]	ESL	6.3	0.39	750	750[4]	40	230	200	150	10	20	16	600	1.3
Commercial[3]	ESL	40	1.6	1500	750[4]	80	230	750	150	10	40	200	600	10
Background Range[5]	N. CA	NE	0.2 to 5.5	NE	30.5 to 72.0	NE	23.8 to 47.5	6.8 to 16.1	46.4 to 101	NE	NE	NE	47.7 to 82.8	NE
Maximum Detection[5]	N. CA	22	20	NE	170	NE	67	54	145	4	4.8	NE	120	1.3

Notes:

mg/Kg	Milligrams per kilogram (ppm, part per million)
<	Less than the Practical Quantitation Limit (PQL)
----	Not Analyzed
NE	Not Established
1	"Use of California Human Health Screening Levels (CHHSLs) in Evaluation of Contaminated Properties, CalEPA, January 2005 and May 2009
2	"Regional Screening Levels (RSL) for Chemical Contaminants at Superfund Sites", USEPA, April 2009
3	"Screening For Environmental Concerns at Sites with Contaminated Soil and Groundwater", Table A, San Francisco Bay Regional Water Quality Control Board, May 2008
4	Listed ESL is for Chromium III
5	"Background Metal Concentrations in Soil in Northern Santa Clara County, California", Christina M. Scott, December 1991

CORNERSTONE EARTH GROUP

Table 2. Total Petroleum Hydrocarbons in Soil by EPA Test Methods 8015B (mg/Kg)

Sample ID		TPHmo
SP-51 to 54		39
SP-55 to 58		40
SP-59 to 62		110
SP-63 to 66		69
SP-67 to 70		120
Residential[3]	ESL	370
Commercial[3]	ESL	2,500

Notes:

mg/Kg Milligrams per kilogram (ppm, part per million)

< Less than the Practical Quantitation Limit (PQL)

3 "Screening For Environmental Concerns at Sites with Contaminated Soil and Groundwater", Table A, San Francisco Bay Regional Water Quality Control Board, May 2008

Table 3. Organochlorine Pesticides in Soil by EPA Test Method 8081A (µg/Kg)

Sample ID		4,4'-DDE	4,4'-DDD	4,4'-DDT	Dieldrin
SP-51 to 54		36	5.3	14	<20
SP-55 to5 8		55	<80	<80	<80
SP-59 to 62		67	9.3	25	<20
SP-63 to 66		53	<80	<80	<80
SP-67 to 70		51	<80	<80	<80
Residential	CHHSL	1600	2300	1600	35
Commercial	CHHSL	6300	9000	6300	130
Residential	ESL	1700	2400	1700	34[6]
Commercial	ESL	4000	10000	4000	130[6]
Residential	RSL	1400	2000	1700	30
Industrial	RSL	5100	7200	7000	110

Notes:

µg/Kg Micrograms per kilogram (ppb, part per million)

< Less than the Practical Quantitation Limit (PQL)

6 Direct Exposure ESLs, Tables A-1and A-2

CORNERSTONE EARTH GROUP

Date:	January 25, 2011
Project No.:	414-1-1
Prepared For:	Mr. Mike O'Connor **HOLDER CONSTRUCTION** 555 Reed Street Santa Clara, California
Re:	Stockpile Sampling and Laboratory Analyses Santa Clara Data Center 500, 504 and 520 Mathew Street and 535 and 555 Reed Street Santa Clara, California

Dear Mr. O'Connor:

Per your request, this letter summarizes the analytical testing performed on an approximately 10,000 cubic yard soil stockpile located at 500, 504 and 520 Mathew Street and 535 and 555 Reed Street in Santa Clara, California (Site). The stockpiled soil reportedly was generated during on-Site earthwork for the construction of a one-story, high-bay, steel-framed data center facility.

Project Background

The approximately 9-acre Site is located between Mathew Street and Reed Street, bordering the Union Pacific Railroad tracks and just west of De La Cruz Boulevard in Santa Clara, California.

Hazardous materials associated with prior Site activities have been detected in soil and ground water beneath the Site. Investigation and cleanup of the hazardous materials has been performed under the oversight of the Santa Clara County Water District (SCVWD), the Santa Clara Fire Department (SCFD) and the California Regional Water Quality Control Board (CRWQCB). These agencies have required no further action for Site investigation and cleanup. Based on our review of the provided documents, known contaminants of potential concern (COPC) consist of petroleum hydrocarbons (associated with prior fuel and waste oil storage in underground storage tanks) and pentachlorophenol (PCP, associated with prior lumber treatment).

Purpose

We understand that there is an approximately 10,000 cubic yard stockpile located at the Site. The purpose of this scope of work was to evaluate the quality of soil currently stockpiled. We understand that this material is planned for landfill disposal.

Environmental Services

A staff geologist under the supervision of a California registered Professional Geologist collected 40 soil samples from the stockpile at different depths using hand sampling equipment on January 17, 2010. Soil samples were obtained by manually pushing a 1½- diameter by 6-inch stainless steel sampling tube into freshly exposed soil in the stockpile. The ends of the liners were covered in Teflon film, fitted with plastic end caps, taped, and labeled with a unique identification number. The samples were then placed in an ice-chilled cooler and transported to a state-certified analytical laboratory (Torrent Laboratory, Inc.) with chain of custody documentation. The 40 samples were composited into 10 composite samples by the laboratory for analytical testing and analyzed for the following:

- EPA Test Method 8270C for semi-VOCs, including PCP;
- EPA Method 8081A for organochlorine pesticides;
- EPA Method 8082 polychlorinated biphenyls (PCBs);
- EPA Method 6010B for California Assessment Manual 17 metals (CAM 17); and
- EPA Method 8015M/8021B for total petroleum hydrocarbons as diesel (TPHd) and motor oil (TPHmo) with a silica gel cleanup.

At ten additional sampling locations, Core N One capsules (in triplicate) were used to sample and transport approximately 5 grams of soil per capsule for gasoline-range petroleum hydrocarbons and Volatile Organic Compound (VOC) analysis (EPA Test Method 8260B, full scan including TPH as gasoline [TPHg]). Analytical datasheets are attached to this letter.

Screening Levels

The reported analytical data were compared to the California Human Health Screening Levels (CHHSLs) (Cal/EPA, September 2010). The CHHSLs are used to screen sites for potential human health concerns where releases of hazardous chemicals to soils have occurred. Under most circumstances, the presence of a chemical in soil, soil gas or indoor air at concentrations below the corresponding CHHSLs can be assumed not to pose a significant health risk. Please note that the San Francisco Regional Water Quality Control Board (Water Board 2008) also has developed Environmental Screening Levels (ESLs). The ESLs are a compilation of screening levels for not only risk to human health but a number of other environmental concerns. Per Cal/EPA guidance (January 2005), "The ESLs are intended for use only at sites overseen by that agency". If a CHHSL doesn't exist for a detected compound, Cal/EPA recommends using the Regional Screening Levels (RSLs) developed by the EPA (Region 9, 2009). In the event, there are no CHHSLs or RSLs available, such as for petroleum hydrocarbons, Cal/EPA allows the data to be compared to ESLs. In addition, naturally occurring background concentrations of metals, such as arsenic - amongst others, in soil may exceed their respective CHHSLs. Cal/EPA generally does not require cleanup of soil to below background concentrations. This issue is frequently encountered with arsenic. Thus, for the metals detected, these data also were compared to regional background levels (Scott, 1991).

Analytical Data

Analytical data for the detected compounds are summarized in Table 1 through Table 3 (attached). Please refer to the analytical datasheet also attached to this letter for complete details.

Conclusions

Based on our review of the provided documents, we conclude the following:

- VOCs (including TPHg), semi-VOCs (including PCP), TPHg and TPHd were not detected above laboratory detection limits.
- Metal concentrations appeared to represent background levels.
- TPHmo were detected in 9 of 10 composite samples analyzed; however, none of the composite samples exceed the residential (unrestricted use) ESL (370 parts per million [ppm]).
- Organochlorine pesticides were detected in 7 of 10 composite samples; however none exceeded the residential (unrestricted use) CHHSL.

In conclusion, based on the history of the Site and the attached analytical datasheets, in our opinion, this material appears acceptable for reuse at commercial properties or for disposal at a permitted landfill. This letter should be provided to the facility or property owner that will receive the soil; written approval to dispose of the soil should be obtained.

Limitations

Cornerstone Earth Group (Cornerstone) performed this investigation to support Holder Construction in evaluation of the above Site. Holder Construction understands that the extent of soil data obtained is based on the reasonable limits of time and budgetary constraints. In addition, the chemical information presented in this letter can change over time and is only valid at the time of this investigation and for the locations sampled. Cornerstone makes no warranty, expressed or implied, except that our services have been performed in accordance with the environmental principles generally accepted at this time and location. This letter, an instrument of professional service, was prepared for the sole use of Holder Construction and may not be reproduced or distributed without written authorization from Cornerstone. It is valid for 180 days.

CORNERSTONE
EARTH GROUP

We thank you for the opportunity to work with you on this important project. Should you have any questions regarding this letter, or if we may be of further service, please contact us at your convenience.

Sincerely,

Cornerstone Earth Group

Ron L. Helm, C.E.G., R.E.A.II
Principal Geologist

Copies: Addressee (1 by email)

CORNERSTONE EARTH GROUP

Table 1. Detected California Assessment Manual Metals in Soil by EPA Test Method 6010B (mg/Kg)

Sample ID		Sb	As	Ba	Cr	Co	Cu	Pb	Ni	Ag	V	Zn	Hg
SP-71 to 74		5.0	7.3	170	59	15	37	3.1	52	4.0	61	38	0.34
SP-75 to 78		<5.0	6.9	210	47	11	27	6.5	78	<1.0	39	45	0.10
SP-79 to 82		<5.0	6.2	240	52	13	33	5.9	64	1.7	47	44	0.13
SP-83 to 86		<5.0	8.6	240	52	12	31	8.9	68	<1.0	45	58	0.11
SP-87 to 90		<5.0	7.8	260	45	12	27	8.7	67	1.3	40	53	0.18
SP-91 to 94		<5.0	5.7	220	48	12	31	7.8	69	<1.0	43	53	0.10
SP-95 to 98		<5.0	5.3	170	40	9.7	24	6.5	53	1.5	35	41	0.10
SP-99 to 102		<5.0	5.5	220	49	10	26	7.4	68	1.3	40	49	0.13
SP-103 to 106		<5.0	5.5	260	47	11	27	8.1	71	<1.0	36	51	0.17
SP-107 to 110		<5.0	7.2	380	44	12	34	12	64	<1.0	34	71	0.10
Residential[1]	CHHSL	30	0.07	5200	NE	660	3,000	80	1,600	380	530	23,000	18
Commercial[1]	CHHSL	380	0.24	63000	NE	3,200	38,000	320	16,000	4800	6,700	100,000	180
Residential[2]	RSL	31	0.39	15000	280	23	3,100	400	1,500	390	550	23,000	4.3
Industrial[2]	RSL	410	1.6	190000	1,400	300	41,000	800	20,000	5,100	7,200	310,000	24
Residential[3]	ESL	6.3	0.39	750	750[4]	40	230	200	150	20	16	600	1.3
Commercial[3]	ESL	40	1.6	1500	750[4]	80	230	750	150	40	200	600	10
Background Range[5]	N. CA	NE	0.2 to 5.5	NE	30.5 to 72.0	NE	23.8 to 47.5	6.8 to 16.1	46.4 to 101	NE	NE	47.7 to 82.8	NE
Maximum Detection[5]	N. CA	22	20	NE	170	NE	67	54	145	4.8	NE	120	1.3

Notes:

mg/Kg	Milligrams per kilogram (ppm, part per million)
<	Less than the Practical Quantitation Limit (PQL)
—	Not Analyzed
NE	Not Established
1	"Use of California Human Health Screening Levels (CHHSLs) in Evaluation of Contaminated Properties, CalEPA, September 2010
2	"Regional Screening Levels (RSL) for Chemical Contaminants at Superfund Sites", USEPA, April 2009
3	"Screening For Environmental Concerns at Sites with Contaminated Soil and Groundwater", Table A, San Francisco Bay Regional Water Quality Control Board, May 2008
4	Listed ESL is for Chromium III
5	"Background Metal Concentrations in Soil in Northern Santa Clara County, California", Christina M. Scott, December 1991

CORNERSTONE EARTH GROUP

Table 2. Total Petroleum Hydrocarbons in Soil by EPA Test Methods 8015B (mg/Kg)

Sample ID		TPHmo
SP-71 to 74		73
SP-75 to 78		130
SP-79 to 82		110
SP-83 to 86		140
SP-87 to 90		94
SP-91 to 94		110
SP-95 to 98		240
SP-99 to 102		73
SP-103 to 106		180
SP-107 to 110		<4.0
Residential[3]	ESL	370
Commercial[3]	ESL	2,500

Notes:

mg/Kg	Milligrams per kilogram (ppm, part per million)
<	Less than the Practical Quantitation Limit (PQL)
3	"Screening For Environmental Concerns at Sites with Contaminated Soil and Groundwater", Table A, San Francisco Bay Regional Water Quality Control Board, May 2008

CORNERSTONE EARTH GROUP

Table 3. Organochlorine Pesticides in Soil by EPA Test Method 8081A (µg/Kg)

Sample ID		4,4'-DDE	4,4'-DDD	4,4'-DDT
SP-71 to 74		33	<8.0	8.8
SP-75 to 78		<20	<20	<20
SP-79 to 82		39	<20	<20
SP-83 to 86		28	<20	<20
SP-87 to 90		<20	<20	<20
SP-91 to 94		20	<8.0	<8.0
SP-95 to 98		24	<20	<20
SP-99 to 102		39	<8.0	11
SP-103 to 106		<20	<20	<20
SP-107 to 110		110	19	37
Residential	CHHSL	1600	2300	1600
Commercial	CHHSL	6300	9000	6300
Residential	ESL	1700	2400	1700
Commercial	ESL	4000	10000	4000
Residential	RSL	1400	2000	1700
Industrial	RSL	5100	7200	7000

Notes:

µg/Kg Micrograms per kilogram (ppb, part per billion)

< Less than the Practical Quantitation Limit (PQL)

Laboratory Test Results for Individual Samples from Each Report Available in PDF Format Upon Request

Appendix N

FAA Height Determination

Federal Aviation Administration
Air Traffic Airspace Branch, ASW-520
2601 Meacham Boulevard
Fort Worth, TX 76137

Aeronautical Study No.
2011-AWP-1150-OE
Prior Study No.
2010-AWP-4187-OE

Issued Date: 03/25/2011

Holder Construction Company
DuPont Fabros
2120 De La Cruz Blvd
Santa Clara, CA 95050

**** DETERMINATION OF NO HAZARD TO AIR NAVIGATION ****

The Federal Aviation Administration has conducted an aeronautical study under the provisions of 49 U.S.C., Section 44718 and if applicable Title 14 of the Code of Federal Regulations, part 77, concerning:

Structure:	Building DuPont Fabros SC1
Location:	Santa Clara, CA
Latitude:	37-21-36.80N NAD 83
Longitude:	121-56-36.70W
Heights:	75 feet above ground level (AGL)
	125 feet above mean sea level (AMSL)

This aeronautical study revealed that the structure does not exceed obstruction standards and would not be a hazard to air navigation provided the following condition(s), if any, is(are) met:

Based on this evaluation, marking and lighting are not necessary for aviation safety. However, if marking and/or lighting are accomplished on a voluntary basis, we recommend it be installed and maintained in accordance with FAA Advisory circular 70/7460-1 K Change 2.

The structure considered under this study lies in proximity to an airport and occupants may be subjected to noise from aircraft operating to and from the airport.

Any height exceeding 75 feet above ground level (125 feet above mean sea level), will result in a substantial adverse effect and would warrant a Determination of Hazard to Air Navigation.

This determination is based, in part, on the foregoing description which includes specific coordinates , heights, frequency(ies) and power . Any changes in coordinates , heights, and frequencies or use of greater power will void this determination. Any future construction or alteration , including increase to heights, power, or the addition of other transmitters, requires separate notice to the FAA.

This determination does include temporary construction equipment such as cranes, derricks, etc., which may be used during actual construction of the structure. However, this equipment shall not exceed the overall heights as indicated above. Equipment which has a height greater than the studied structure requires separate notice to the FAA.

This determination concerns the effect of this structure on the safe and efficient use of navigable airspace by aircraft and does not relieve the sponsor of compliance responsibilities relating to any law, ordinance, or regulation of any Federal, State, or local government body.

Any failure or malfunction that lasts more than thirty (30) minutes and affects a top light or flashing obstruction light, regardless of its position, should be reported immediately to (877) 487-6867 so a Notice to Airmen (NOTAM) can be issued. As soon as the normal operation is restored, notify the same number.

This aeronautical study included evaluation of a structure that exists at this time. Action will be taken to ensure aeronautical charts are updated to reflect the most current coordinates, elevation and height as indicated in the case description.

If we can be of further assistance, please contact our office at (310) 725-6557. On any future correspondence concerning this matter, please refer to Aeronautical Study Number 2011-AWP-1150-OE.

Signature Control No: 137847476-139468340 (DNE)
Karen McDonald
Specialist

Attachment(s)
Case Description
Map(s)

cc: AeroNav Services w/map

Case Description for ASN 2011-AWP-1150-OE

Original above ground level(AGL) proposal was 61', we are requesting a change to that original proposal in which the permanent structure height will be 75' AGL

Verified Map for ASN 2011-AWP-1150-OE

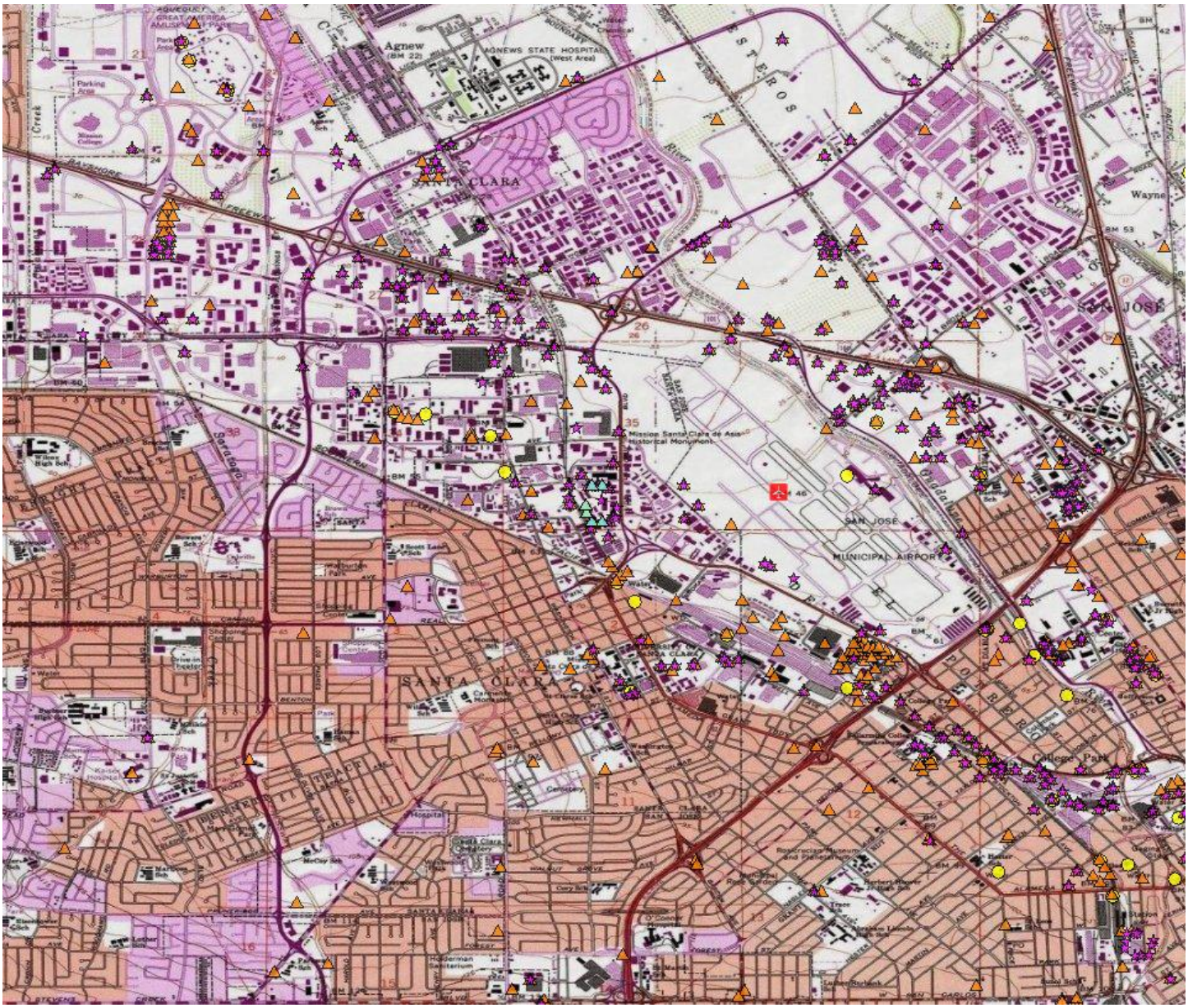

Appendix O

GHG Memorandum

Application of the Greenhouse Gas Tailoring Rule and Greenhouse Gas Impacts

I. APPLICATION OF THE GREENHOUSE GAS (GHG) TAILORING RULE

On June 3, 2010, EPA issued its final "PSD and Title V Greenhouse Gas Tailoring Rule" (hereinafter, "Tailoring Rule), so called because it tailors the regulation to focus PSD and Title V permit requirements on the largest GHG-emitting facilities. 75 Fed. Reg. 31514; EPA "PSD and Title V Permitting Guidance for Greenhouse Gases" at 7 (March 2011) (hereinafter "GHG Guidance")[1]. The Tailoring Rule sets thresholds for GHG emissions, addressing emissions from six GHGs as measured in carbon dioxide equivalents (CO_2e).

A. Potential to Emit

PSD regulations - for both criteria pollutants and GHGs - are triggered for covered pollutants when the source's "potential to emit" (PTE) exceeds a given threshold. Because the anticipated use of emergency backup sources, such as the Backup Generators at the Data Center, is necessarily unknown in advance, EPA has provided guidance for estimating the PTE for such sources. In such documents, EPA has rejected the notion that a backup source should only include scheduled non-emergency use (such as testing and maintenance) in calculating the PTE. Instead, "to determine PTE, a source must estimate its emissions based on the worst-case scenario taking into account startups, shutdowns and malfunctions." Letter from Steven C. Riva, Chief, Permitting Section, Air Programs Branch, February 14, 2006, at 2.[2]

EPA has stated in a guidance document that it "believes that 500 hours is an appropriate default assumption for estimating the number of hours that an emergency generator could be expected to operate under worst-case conditions. Alternative estimates can be made on a case-by-case basis where justified by the source owner or permitting authority (for example, if historical data on local power outages indicate that a larger or smaller number would be appropriate)." Memorandum, Calculating Potential to Emit (PTE) for Emergency Generators, John S. Seitz, Director, Office of Air Quality Planning and Standards, September 6, 1995, at 3.[3] Although this guidance was issued in the context of calculating PTE for criteria pollutants, it is equally applicable to calculation of a source's PTE for GHGs.

If each of the Backup Generators were to operate for 500 hours per year, there would be a total operation of 8,000 hours per phase per year:

- $16 * 500 \ \frac{hours}{year} = 8{,}000 \ \frac{hours}{year}$ per phase; or
- $32 * 500 \ \frac{hours}{year} = 16{,}000 \ \frac{hours}{year}$ total

[1] *Available at*: http://www.epa.gov/region07/air/nsr/nsrmemos/ghgguid.pdf.

[2] *Available at:* http://www.epa.gov/region07/air/nsr/nsrmemos/generator.pdf.

[3] *Available at*: http://www.epa.gov/region07/air/title5/t5memos/emgen.pdf.

The design factor for the Data Center calls for the Backup Generators to be used at a maximum load of 70%. To calculate the fuel usage at 70% load, the Applicant has made comparisons to other data centers operated by DuPont Fabros Technology, Inc. ("DuPont Fabros"), and has completed field testing of the Phase 1 Backup Generators. Based on operational data from the ACC5 data center in Ashburn, Virginia and the NJ1 Data Center in Piscataway, New Jersey - each equipped with identical backup generation systems as the Xeres Data Center[4] - the Applicant anticipates an average fuel consumption of 114.8 gallons of ultra-low sulfur diesel (ULSD) per hour at 70% load.

Initial testing of the Phase 1 Backup Generators was conducted in August, 2011. When run at 70% load, the Backup Generators had fuel consumption rates ranging from approximately 113 gallons ULSD per hour to 117 gallons ULSD per hour, indicating that the 114.8 gallons ULSD per hour is a reasonable estimate of anticipated performance.

If the Backup Generators each operated at an average 70% load for the 500 hours, the total annual fuel consumption would be 918,400 gallons per phase, or 1,836,800 gallons total for both phases:

- $8{,}000\ \frac{hours}{year}$ per phase * $114.8\ \frac{gal\_ULSD}{hour} = 918{,}400\ \frac{gal\_ULSD}{year}$ per phase; or

Both the California Air Resource Board (CARB) and the United States Environmental Protection Agency (EPA) have issued mandatory reporting regulations for GHGs. *See* 17 CCR § 95100 et seq.; 40 CFR Part 98. Although neither set of regulations will require GHG reporting from emergency generators such as the Backup Generators[5], the regulations provide standardized formulas by which to calculate GHG emissions from combustion sources. The Applicant has thus calculated the PTE for the Backup Generators according to the mandatory reporting regulations.

The CARB mandatory reporting regulation, as approved December 16, 2010, provides that diesel fuel has a high heat value of 5.825 million British Thermal Units (MMBtu) per barrel, where a barrel is defined as 42 gallons. The regulation also provides the CO_2 emission factor for diesel of 73.1 kg CO_2 per MMBtu.[6] This yields 9,311.0 metric tons ("tonnes") or 10,263.5 short tons ("tons") of CO_2 emissions per phase per year:

- $918{,}400\ \frac{gal\_ULSD}{year}$ per phase * $1\ \frac{barrel\_ULSD}{42\_gal\_ULSD}$ * $5.825\ \frac{MMBTu}{barrel\_ULSD}$ *

[4] The backup generators at the NJ1 facility are not equipped with Selective Catalytic Reduction technology, but are otherwise identical engines and burn diesel fuel at the same rate as the Backup Generators at the Xeres Data Center.
[5] *See* 17 CCR § 95101(c) ("This article does not apply to, and greenhouse gas emissions reporting is not required for: . . . (3) Generating units designated as backup or emergency generators in a permit issued by an air pollution control district or air quality management district. . . ."); 40 CFR § 98.30(a) (The General Stationary Fuel Combustion "source category does not include . . . emergency generators in a permit issued by a state or local air pollution control agency."); 40 CFR § 98.40(a) (The Electricity Generation "source category does not include . . . emergency generators in a permit issued by a state or local air pollution control agency.").
[6] *See* 17 CCR. § 95125, Appendix A.

$$73.1\ \frac{kg\_CO_2}{MMBTu} * 1\ \frac{tonne\_CO_2}{1000\_kg\_CO_2} = 9{,}311.0\ \frac{tonne\_CO_2}{year}\ \text{per phase}$$

- $9{,}311.0\ \frac{tonne\_CO_2}{year}$ per phase * $1.1023\ \frac{ton\_CO_2}{tonne\_CO_2} = 10{,}263.5\ \frac{ton\_CO_2}{year}$ per phase

On July 25, 2011, CARB published modified text for proposed changes to the mandatory reporting regulation.[7] Pursuant to the proposed changes, GHG emissions will no longer be calculated by reference to emissions tables in the California Code of Regulations, but will instead use those published by the EPA in its mandatory reporting regulation, 40 CFR Part 98. *See proposed* 17 CCR § 95100.5(c)-(d).

Pursuant to the federal mandatory reporting regulation, diesel fuel of the type used by the Backup Generators is classified as falling within the category "Distillate Fuel Oil No. 2." 40 CFR Part 98, subpart C, Table C-1 provides for Distillate Fuel Oil No. 2 the high heat value of 0.138 MMBtu per gallon fuel and the CO_2 emission factor of 73.96 kg CO_2 per MMBtu. Using these values for the Backup Generators yields 9,373.6 tonnes or 10,332.6 tons of CO_2 emissions per phase per year:

- $918{,}400\ \frac{gal\_ULSD}{year}$ per phase * $0.138\ \frac{MMBtu}{gal\_ULSD} * 73.96\ \frac{kg\_CO_2}{MMBtu}$

  $$* 1\ \frac{tonne\_CO_2}{1000\_kg\_CO_2} = 9{,}373.6\ \frac{tonne\_CO_2}{year}\ \text{per phase}$$

- $9{,}373.6\ \frac{tonne\_CO_2}{year}$ per phase * $1.1023\ \frac{ton\_CO_2}{tonne\_CO_2} = 10{,}332.6\ \frac{ton\_CO_2}{year}$ per phase

B. "Step 1" of the Tailoring Rule

The Tailoring Rule's applicability provisions are separated into Step 1 and Step 2. EPA found that any source already required to obtain a PSD permit due to its emissions of criteria pollutants must obtain a PSD permit that addresses emissions of GHGs if the permit is not issued before January 2, 2011. EPA called these sources "Step 1" sources. *See* 75 Fed. Reg. at 31516; 40 CFR 51.166(b)(48)(iv); 52.21(b)(49)(iv)).

As discussed in Section 2.5.2.1.7, the Data Center and Backup Generators did not trigger PSD requirements for its criteria pollutant emissions. Moreover, as discussed in Section 2.5.2.2, BAAQMD issued the ATC in June 2010 and the Applicant commenced construction soon thereafter. Thus, the Data Center is not a Step 1 source.

[7] Text of CARB's proposed mandatory reporting regulation is available at: http://www.arb.ca.gov/regact/2010/ghg2010/mandatory15dayreg.pdf.

C. "Step 2" of the Tailoring Rule

If a source would only become subject to PSD requirements due to its GHG emissions, it may be considered a "Step 2" source for Tailoring Rule purposes. For such sources, EPA found that if the source begins actual construction after July 1, 2011, it must obtain a PSD permit if the PTE for GHGs exceeds specified thresholds. *See* 75 Fed. Reg. at 31594. EPA noted that it "will not require any sources to which PSD permitting requirements begin to apply in Step 2 to obtain a PSD permit to continue construction that actually begins before Step 2 begins." *Id.*

PSD permitting applicability for new Step 2 sources that begin actual construction after July 1, 2011 will be triggered if the GHG emissions total at least 100,000 tpy CO_2e. *See* 75 Fed. Reg. at 31516; 40 CFR §§ 51.166(b)(48)(v)(a); 52.21(b)(49)(v)(a)). For modifications to existing sources for which actual construction begins after July 1, 2011, PSD requirements will be triggered if the modification either: (1) results in a net increase of GHG emissions of at least 75,000 tpy CO_2e *and* the existing source has a PTE for GHG emissions of at least 100,000 tpy CO_2e; or (2) results in a net increase of GHG emissions of at least 100,000 tpy *See* 75 Fed. Reg. at 31516; 40 CFR §§ 51.166(b)(48)(v)(b); 52.21(b)(49)(v)(b)).

To "begin actual construction" means to initiate "onsite construction activities on an emissions unit which are of a permanent nature," such as "installation of building supports and foundations, laying underground pipework and construction of permanent storage structures." 40 CFR § 52.21(b)(11). The Applicant initiated "onsite construction activities . . . of a permanent nature" for the Data Center well before July 1, 2011, as explained in Section 2.2.1. Additionally, the total PTE for the facility does not exceed 100,000 tpy CO_2e. As such, the Data Center will not need to obtain a PSD permit on the basis of its GHG emissions.

II. CUMULATIVE IMPACTS FROM GHG EMISSIONS

The impact of GHG emissions from any particular source is hard to qualify, because the impacts associated with GHG emissions occur on a global scale and GHG emissions are well-mixed in the atmosphere. Thus, a particular source's contribution to increasing concentrations of GHG emissions in the atmosphere and any resulting global warming that might occur would be difficult to establish and is very likely negligible. However, California and federal agencies have begun to focus on sources' contribution to the cumulative problem of global climate change by way of its GHG emissions.

Section 15064.4 of the California Environmental Quality Act (CEQA) Guidelines provides a lead agency should consider whether the project emissions exceed a threshold of significance that the lead agency determines applies to the project. *See* 14 CCR § 15064.4(b)(2). The Commission has not adopted thresholds of significance for GHG emissions, and the suggested methodology for assessing GHG impacts contained in the precedential Avenal decision does not apply due to the fact that the Backup Generators do not provide electricity to the grid and thus do not directly displace other power generation.[8] The CEQA Guidelines also provide that a lead agency should consider "[t]he extent to which the project complies with regulations or requirements adopted to implement a statewide, regional, or local plan for the reduction or

[8] *See* Avenal Energy Project, Presiding Member's Proposed Decision (CEC-800-2009-006-PMPD), *available at*: http://www.energy.ca.gov/2009publications/CEC-800-2009-006/CEC-800-2009-006-CMF.PDF, at 98-111.

mitigation of greenhouse gas emissions" that are "adopted by the relevant public agency through a public review process." *Id.* § 150744(b)(3). There are currently no such enforceable regulations or requirements applicable to the Data Center or the Backup Generators. Accordingly, this analysis of GHG emission impacts consists of quantifying project-related GHG emissions and determining their significance in comparison to the goals of AB 32 and other policies.

A. Project-Related GHG Emissions

1. Construction Emissions

The Applicant estimates that 49 tons of CO_2 were emitted for construction of the Phase 1 Backup Generators. As explained in Section 2.4, the on-site construction for the Backup Generators consists only of the use of a crane to lift each Backup Generator onto the second floor of the Data Center, and then test the Backup Generators for emissions controls and fuel systems.

The installation crane uses diesel fuel, and burns it at a rate of 39.8 gallons per hour. For Phase 1, the crane was allotted 64 hours to install the 16 Backup Generators, 32 hours to install the fuel systems (consisting of underground and aboveground tanks), and 16 hours to install the emissions control Selective Catalytic Reduction (SCR) systems:

- $(64 + 32 + 16)\ hours * 39.8\ \frac{gal\_ULSD}{hour}$ per phase * $22\ \frac{lbs\_CO_2}{gal\_ULSD} * \frac{ton}{2000\_lbs}$

  $= 49\ \ ton\_CO_2$ per phase

2. Operation Emissions

As explained above, each phase of the Backup Generators will have a PTE of either 10,263.5 or 10,332.6 tpy CO_2, depending on the high heat value and emission factors used. It is likely, however, that the Backup Generators will operate substantially less than their permitted maximum of 500 hours each, and consequently will emit much less than 10,000 tpy CO_2 per phase. For example, the DuPont Fabros ACC5 facility used 46,681 gallons of ULSD in 2010, corresponding to approximately 513 tons of CO_2, and the NJ1 facility used 8,017 gallons of ULSD in 2010, corresponding to approximately 88 tons of CO_2.

B. Consistency with Policy Goals

In implementing the California Global Warming Solutions Act (AB 32), CARB has placed considerable emphasis on the importance of energy efficiency in meeting climate change goals. As explained in the AB 32 Scoping Plan, "[s]ignificant progress can be made toward the 2020 goal relying on existing technologies and improving the efficiency of energy use."[9] The Commission's 2009 Integrated Energy Policy Report (IEPR) also explains that energy efficiency

[9] *See* Climate Change Scoping Plan, December 2008, *available at* http://www.arb.ca.gov/cc/scopingplan/document/adopted_scoping_plan.pdf, at ES-1.

"can contribute to meeting climate change goals with little or no impact on the environment and with measurable benefits (for example, cost savings) to the consumer."[10]

The Data Center embodies these energy efficiency and climate goals. First, due to its large size, the Data Center can benefit from economies of scale, using less energy for the same services than it would take for each customer to host its own data at the customer site. Additionally, the Xeres Data Center will consist of highly efficient, state-of-the-art systems, thereby minimizing the energy demands of its critical load. Its Power Usage Effectiveness - the standard measurement of energy efficiency for the data center industry - is substantially lower that industry average, illustrating the Data Center's efficiency. Moreover, the Applicant anticipates that the Data Center will be certified as LEED Gold, providing another indication of the Data Center will meet high efficiency standards. Consequently, the Xeres Data Center can provide comparable service to other data centers while using considerably less energy - whether that energy is supplied by the utility or by the Backup Generators. Due to an increasing demand for data center services, the Xeres Data Center may effectively "displace" some demand provided by less efficient data centers and thereby decrease industry-wide GHG emissions growth.

[10] CEC-100-2009-003-CMF, December 5, 2009, *available at* http://www.energy.ca.gov/2009publications/CEC-100-2009-003/CEC-100-2009-003-CMF.PDF, at 21.

Appendix P

Permit Inspection for Refrigeration Units using R123

JOB COPY

CITY OF SANTA CLARA
OFFICE OF THE FIRE MARSHAL

1675 Lincoln Street, Santa Clara, CA 95050
FAX (408) 241-3006

(408) 615-4987
Code Requirement Information

(408) 615-4970
Schedule Inspection Appointments

Fire Dept. #:	FIR2011-0294, Rev1	FIRE PERMIT STATUS: Permit Issued
Address:	555 Reed Street	

Facility:	DuPont Fabros Technology	**Occupancy:**	B, S-1
Scope of Work:	Install Refrigeration Unit using R123 for Centrifugal Chillers and Refrigerant Monitoring System		
Permit Type:	Miscellaneous	**Station Area:**	1
Date Reviewed:	5/26/11, 6/30/11	**Reviewed by:**	A. Hyatt, (DH)

Fire Department Plan Check Requirements

Final approval shall be based on compliance with these comments, field inspections and all applicable codes/ordinances. Only the permit applicant can call to schedule an inspection. For appointments call (408) 615-4970.

Installation shall comply with all applicable codes including the following: 2010 California Fire Code (CFC), 2010 California Building Code (CBC), 2010 California Mechanical Code (CMC), 2010 California Electric Code, and 2010 Santa Clara Municipal Fire and Environmental Code (SCMFEC).

FPO'S INITIALS	#	CONDITIONS / COMMENTS: CORRECTIVE ACTION NECESSARY
General	1.	**NOTE: An approved / stamped set of plans, FD conditions / comments, and permit card SHALL BE ON-SITE at all times. Inspections will NOT be performed without them on-site.**
	2.	**Expirations of Permits** - Every permit issued by the Fire Department (except annual fire permits) under the provisions of this code shall expire by limitation and become null and void, if building or work authorized by such permit is not commenced within 180 days from the date of such permit, or if the building or work authorized by such permit is suspended or abandoned at any time after the work is commenced for a period of 180 days. (2010 SCMFEC, Section 105.10.5)
	3.	**Related Permits** - Final approval for this permit will not be granted until all other **related** permits have been approved.
	4.	When field conditions necessitate any substantial (>5%) change from approved plans, the change shall be submitted to the authority having jurisdiction for approval. Provide "Permit Number" and "Address" on the "Revised" plans and send to the attention of the "Fire Prevention Officer" that witnessed the changes on site.
	5.	**When minor changes (< 5%) from approved plans are made, corrected "As Built" plans shall be supplied to the owner and the authority having jurisdiction.** Provide "Permit Number" and "Address" on the "As Built" plans and send to the attention of the "Fire Prevention Officer" that witnessed the changes on site.
	6.	**Fee Assessment** - FPO shall re-evaluate annual permit fees as a result of this installation.
	7.	**Seismic Protection** – Machinery and equipment utilizing hazardous material shall be

		braced and anchored in accordance with the seismic design requirements of the CBC for the seismic design category __ (2010 CFC 2703.2.8 and 2010 CBC Sec. 1613)
	8.	**Fire suppression or sprinkler system modifications** - Requires separate permit(s) and fee(s) to be submitted to Fire Department for approval.
	9.	**Fire stopping for penetrations** - Provide approved fire stopping in areas where piping, ducts, etc., have been installed/removed. Listing details may be necessary to confirm proper installation.
	10.	**Labeling** - Label all doors, areas, piping, tubing, etc., in accordance with Santa Clara Fire Department guidelines. Additional labeling/signage may be required based upon field inspection. (2010 SCMFEC)
	11.	**Signage** - Install visible hazard identification signs as specified in NFPA 704 for the specific material contained on all stationary containers and aboveground tanks and at the entrances to locations where hazardous materials are stored, dispensed, used or handled in quantities requiring a permit and at specific entrances and locations designated by the fire code official. (2010 CFC 2703.5)
	12.	**Emergency Shutoff Switches/Safety Interlocks** - The Fire Prevention Officer shall witness the proper functioning of emergency shut-off switches and safety interlocks or provide documents from an approved third-party that conducted the test. (CFC 2703.2.9)
	13.	**Refrigeration System Emergency Shutoff** – A clearly identified switch of the break-glass type or with an *approved* tamper-resistant cover shall provide off-only control of refrigerant compressors, refrigerant pumps and normally closed automatic refrigerant valves located in the machinery room. (CFC 606.9.1) Remote control of the mechanical equipment and appliances located in the machinery room shall be provided at an *approved* location immediately outside the machinery room and adjacent to its principal entrance. (CFC 606.9)
	14.	**Ventilation System Emergency Control** - A clearly identified switch of the break-glass type shall provide on-only control of the machinery room ventilation fans. (CFC 606.9.2) Remote control of the mechanical equipment and appliances located in the machinery room shall be provided at an *approved* location immediately outside the machinery room and adjacent to its principal entrance. (CFC 606.9)
	15.	**Pressure Testing** – Refrigerant containing portions of the system that are field-erected shall be pressure tested and proved tight. The high side shall be test at no less than 15 psig (for water cooled) or 30 psig (for air cooled). The low side shall be tested at no less than 15 psig. (CMC 1124.2) A dated declaration of the test, signed by the installer, shall be provided. (CMC 1124.4)
	16.	**Pressure Relief Devices** – Refrigeration systems shall be protected by a pressure-relief device or other means designed to safely relieve pressure due to fire or abnormal conditions. (CMC 1114.1)
	17.	**Gas Detection System Testing** - Provide copies of functional test data for all new gas monitoring points. Document or demonstrate proper functioning of gas detection system through live gas testing. (CFC 2703.2.9)
		End...

Appendix Q

Silicon Valley Power Interconnection Materials

AUG 30, 2008

DUPONT FABROS TECHNOLOGY
SC1 PLANT - 555 REED AVENUE – SANTA CLARA, CA

POWER SYSTEM DESIGN, PROTECTIVE SYSTEMS, SEQUENCE OF OPERATION FOR STANDBY GENERATORS

A. 25kV UTILITY DISTRIBUTION SYSTEM

1. Please refer to the attached drawings. The DFT SC1 Data Center will be constructed in at least two phases of construction. The first building (Phase One) will receive Utility power from the new 60kV substation, connected to the 24.9kV secondary of power transformer "T-A", and through the indoor metalclad switchgear "MV-A". Maximum demand load of the Phase One facility at full usage is anticipated to be approximately 29mVA.

2. An alternate feed from redundant transformer "T-R" is provided, connected to the Tie Breaker of "MV-A". (The Main Breaker and Tie breaker of "MV-A' are Kirk-key interlocked together, such that one of the two breakers is always locked out of its cell, fully disconnected).

3. The 24.9kV incoming lines from the outdoor substation to the 24.9kV switchgear are monitored by Basler BE1-1051 relays, with sensing voltage provided from three PT's connected Wye-Wye, and neutrals grounded on both primary and secondary. The IEEE #59 functions of the relay are set to trip the Utility Main Service Breaker (Breaker #52M-A on the attached drawings) if voltage exceeds 120% of normal for 1.0 second, line-to-line or line-to-ground. A second #59 function within the relay will be set to trip the breaker in 0.3 seconds if voltage exceeds 130% of normal, as backup Surge Arrestor protection. The arrangement provides protection for both the plant and SVP's systems for any condition of ferroresonance on the Utility system involving interaction of utility feeders with the plant's transformers.

4. No automatic transfer operations are performed at the 24.9kV level, and during any voltage sag or unbalanced disturbance on the 24.9kV distribution system, all breakers in the 25kV equipment will remain closed. There are two non-fault conditions which will result in tripping of the 25kV Main Service Breaker - a utility Overvoltage, as described above, or excessive reverse power flow from the plant back into the utility system. In both cases the 25kV Main Service #52M-A breaker will be tripped, disconnecting the entire plant from utility power.

5. The #32R reverse power function of the BE1-1051 on Breaker #52M-A is programmed as a backup to all of the #32 functions on the 16 downstream Utility Main Breakers in the 600V Mx boards. Preliminary setting at the 24.9kV level is 1000kW pickup, definiite-time trip at 2.0 seconds.

Sixteen standby diesel-generator sets are being installed in Phase One of the plant. The sets are manufactured by Detroit Diesel, and are rated 2250kW/2813kVA, with subtransient reactance of 13.4%.

As discussed previously, SVP should note that none of the sixteen diesel-generators being installed will operate as a prime power source. There is no intent to export or to sell power, no intent to co-generate or peak-shave, and no intent to operate in parallel with the Utility for extended periods of time. There also is no intent to arrange for a terminable-service "load-curtailment" rate structure agreement.

C. MOMENTARY PARALLEL OPERATION OF GENERATORS WITH SVP:

DFT intends to momentarily parallel diesel-generator sources with utility power, for brief intervals of time that will occur only during transfers of loads from utility power to generator, or vice versa, under the circumstances and conditions described below.

SVP should note that the load profile of the SC1 facility will appear to the utility source more like a group of individually small 600V services, rather than a large block load at the 60kV level, since any operation that involves momentary paralleling of sources will place only one diesel-driven generator in parallel with the Utility at any given time, and those periods of overlap are brief. Under all conditions other than overlapping load transfer, every switchboard is separated at all times from at least one of its two possible sources.

All automatic load transfer operations will occur within the respective individual "Mx" switchboards, at the 600V level. There are only two conditions under which closed-transition transfers between Utility and Generator sources will occur:

- Automatic re-transfers from Generator to Utility source after a Utility supply interruption and restoration to normal. Maximum parallel overlap time of this mode of transfer will be 2.0 seconds. The retransfer to Utility sequence will be carefully controlled such that there will be 30 seconds between transfers of systems, one system to the next.

- Manually initiated transfers from Utility to Generator, for maintenance and testing purposes, or under certain emergency conditions. In this mode, the involved respective load will be shifted from Utility to Generator on a soft-load ramp of about 400kW per second, so the expected parallel overlap time is around 5-6 seconds for a fully loaded system. Only one of the plant's Generators operates in parallel with the utility source during the operation.

D. OUTLINE OF END-TO-END SEQUENCE UPON FAILURE OF UTILITY SOURCE

The narrative below describes a complete sequence, end-to-end, upon failure of the utility power source to the entire facility. Sequence is initiated by voltage sensing

(overvoltage, undervoltage, phase voltage balance, and negative phase sequence) at the incoming line of each of the "Mx" switchboards.

Each Utility Main Breaker (Breaker #52-U on the drawings) at each "Mx" board is equipped with a Basler BE1-1051 relay. The relays are programmed with IEEE #27, 47, 59 and 81 functions. If any function is sensed to be out of tolerance, the relay signals the Piller system to initiate appropriate action.

The flywheels of the RUPS store enough kinetic energy to ride through a mains failure of roughly 12 seconds while safely supporting the critical load. Since roughly 7 seconds are required for starting the standby diesel generators and preparing them to accept load, the Piller system responds rapidly to a Utility disturbance, and commits to separate from Utility power and transfer to generator power within one second of sensing the disturbance in the supply voltage.

Sequence is as follows:

1. T=0.0 sec - Utility failure detected at 16 "Mx" locations.
2. T=0.2 sec - All Piller RUPS Input Breakers trip, separating all RUPS system inputs from Utility system. Critical loads now supported entirely by RUPS from flywheels.
3. T=1.0 sec - If Utility supply remains out of tolerance, as sensed by the BE1-1051 at the Mx Switchboards, all UTIL MAIN Breakers are tripped. Piller commands all "Essential" load breakers to trip in all locations, and simultaneously commands diesel generator starts at 16 locations.
4. T=8 sec (approx) - All sixteen standby diesels are at rated speed and frequency, ready to accept load. The Generator Main breaker #52G is commanded Closed, re-energizing the bus of the "Mx" switchboard.
5. T=9 sec (approx) – The Piller system controls diesel-generators to synchronize each generator output to its respective RUPS output, across its respective System Bypass breaker. When synchronism is reached (voltage, frequency, and phase angle match), the Bypass breaker is closed, and the RUPS system output breaker is opened. The Critical loads are now supported by the diesel-generator, through the RUPS System Bypass breaker.
6. T=12 to 20 sec (approx) – Piller commands sequential Close of Essential load breakers, restoring power to essential loads from Generator.
7. T=20 sec to 30 sec (approx) – Piller commands sequential Close of Chiller breakers.
8. T= 180 sec (approximate) – Flywheel of RUPS completes its kinetic re-charge from Generator Power.

The entire system runs in this condition, with all plant loads on diesel generators, until Utility Power is restored, as sensed by BE1-1051 relays in all boards, after satisfying parametric setpoints for #27, 47 and 59 and 81 functions. The BE1-1051 relays and the Piller controls will monitor stability of the Utility source for 5 minutes. After 5 minutes, the retransfer sequence begins, with clock now reset to zero for the sequence:

1. T=10.0 sec (approx) - At Mx-1A, Piller synchronizes output of Diesel Generator #1A to Utility source, across the open UTIL Main Breaker. When synchronism is reached (voltage, frequency, and phase angle match), Piller

commands M1-A UTIL Main Breaker Closed. Piller system controls diesel power to ramp the total switchboard load from Generator to Utility over a 2.0 second load ramp. After an overlap of 2.0 seconds, Piller commands GEN Main Breaker #52G to open.

2. T=45.0 sec (approx) – At M1-B, Piller synchronizes output of Diesel Generator #1B to Utility source, across the open UTIL Main Breaker. When synchronism is reached (voltage, frequency, and phase angle match), Piller commands M-1B UTIL Main Breaker Closed. Piller system controls diesel power to ramp the total switchboard load from Generator to Utility over a 2.0 second load ramp. After an overlap of 2.0 seconds, Piller commands GEN Main Breaker Open.
3. T=80 sec (approx) – Piller repeats sequence above at Switchboard M2-A, then 35 seconds later, M2-B, and so on, until all 16 switchboards in the facility have been returned to Utility power. The complete end-to-end retransfer sequence will require approximately 9 minutes to complete.
4. Engine cool-down Cycle – After retransferring its load to Utility, each engine runs unloaded for a 5-minute cool-down cycle, then shuts down.

- End of Section -

E. OTHER ITEMS - SYSTEM PROTECTION & CONTROL POWER

- All transfer operations will be made with transfer pair circuit breakers manufactured by Square-D Company (these are the French-derived *Merlin-Gerin Masterpact* breakers, generally considered to be the most reliable circuit breakers available in the world for load transfer applications such as at the SC1 plant. DuPont Fabros has hundreds of *Masterpact* breakers in service in similar applications at other facilities, with very successful operation).

- Multiple Control Power sources are used throughout the system to assure that all transfer pair breakers have reliable closing and tripping power at all times, under all conditions. In most cases, the control power source is 120VAC, derived from various uninterruptible sources (our collective and considerable experience is that use of distributed battery-derived DC control power sources is less reliable than AC in systems like this one, as such systems are very difficult to design, install and control, and very difficult for owners like DuPont Fabros to safely maintain over their service life).

- All UTIL Main and GEN Main transfer pair breakers include a redundant shunt trip device, hard-wired though timers to prevent extended parallel operation, should a failure occur in the system controls and/or in the normal control power sources and/or or in the primary shunt trip devices. Should a breaker fail to open during a closed-transition transfer operation, the 1st hard-wired timer will send a Trip signal to the Redundant shunt trip of the Utility Main Breaker at 8.0 seconds after determining that both breakers are closed. Should the Utility Main Breaker still fail to open, the 2nd hard-wired timer sends a a trip signal to the redundant shunt trip of the Generator Main breaker 1.0 seconds later.

- In the event that a BE1-1051 relay fails or loses control power while a generator is momentarily in parallel with SVP power, a spring-loaded contact in the BE1-1051 will close to trip the respective breaker via its redundant shunt trip.

- Overcurrent trip devices on all 600V main devices and feeder breakers are self-powered from internal CT's, so overcurrent protection remains on the breakers even if a multi-level failure disables all other protective functions.

- All 600V systems are high-resistance grounded, so ground fault protection is not used at the 600V level. Power directional relays are 3-phase, BASLER BE1-1051 devices, set at 500kW primary reverse power pickup at each "Mx" board.

- 600V Synch check relays are BASLER BE1-1051. A second synch-check element within the BE1-1051 is used as redundant backup, hard-wired directly into the closing circuit of each transfer pair breaker. Relays are connected fail-safe (the synch check relay contacts fail open, so that breaker closing is blocked if a relay malfunctions).

- Each breaker has at least two sources of AC power for spring charging, closing and tripping. The primary control power source is derived from an alternate RUPS continuous power system. In the event of control power failure, the system automatically throws over to an internal CPT located within the switchboard, deriving its power from its own local RUPS system. The transfer is made with a high speed #83 device that operates in 3-4 cycles.

F. SYSTEM HARMONICS IMPRESSED ON SVP SYSTEM FROM SC1 PLANT

The use of the Rotary UPS systems in the plant, rather than Static UPS systems having static power converters, greatly mitigates harmonics from within the plant that could be impressed back on SVP's system. Our past experience indicates that the SC1 system can be expected to produce Total Harmonic Current Distortion (as seen by SVP) in the range of 3-4%, and Total Harmonic Voltage Distortion of just 2-3%, at all load levels - values of THD which are well below those proscribed in the IEE-519 standard.

Load power factor, as seen by SVP, is expected to be between .95 and unity at all levels of plant load.

- End of Section -

SIMPLIFIED SINGLE-LINE DIAGRAM

POWER SYSTEM – 60KV THROUGH TYPICAL 600V GENERATOR INTERCONNECTION

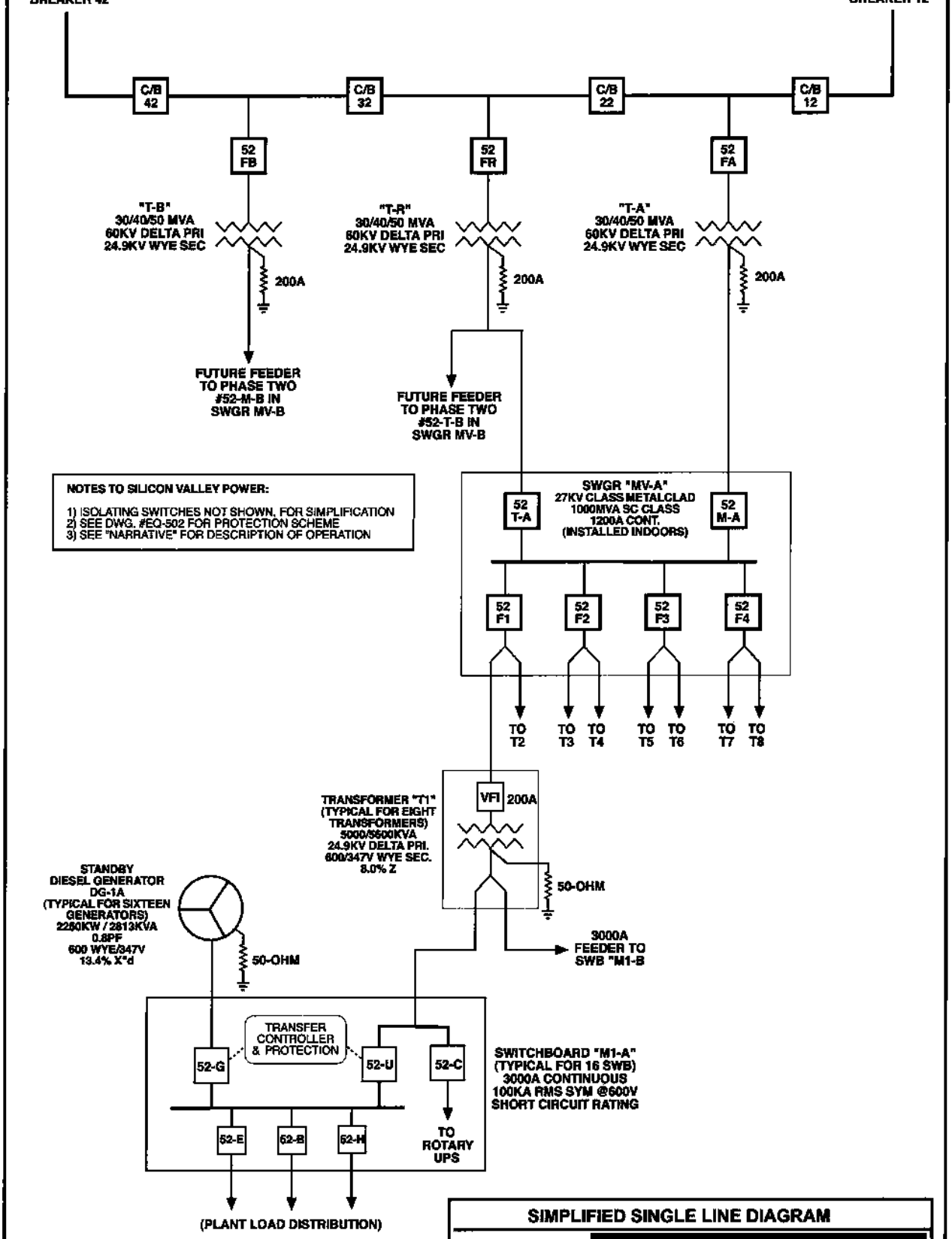

SIMPLIFIED SINGLE LINE DIAGRAM

DuPont Fabros Technology

DUPONT FABROS TECHNOLOGY
SC-1 DATA CENTER
SANTA CLARA CA

Power Distribution Systems

SH. #EQ-501
By: J.J. Guentert
Date: AUG 28-08

Rev. #01
AUG 30 - 08

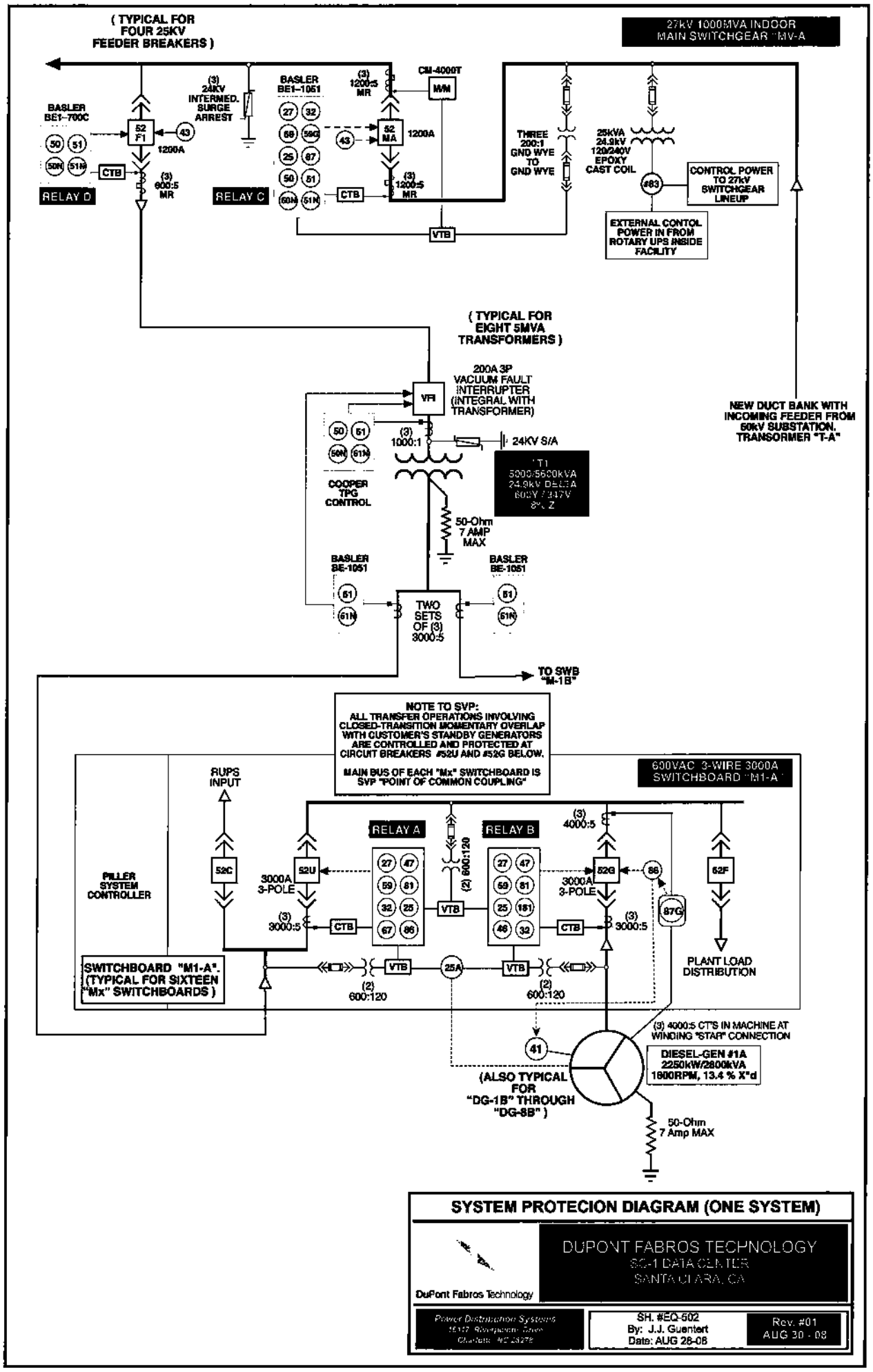

SYSTEM PROTECION DIAGRAM (ONE SYSTEM)

DuPont Fabros Technology

DUPONT FABROS TECHNOLOGY
SC-1 DATA CENTER
SANTA CLARA, CA

Power Distribution Systems
1617 Rivington Drive
Charlotte, NC 28278

SH. #EQ-502
By: J.J. Guentert
Date: AUG 28-08

Rev. #01
AUG 30 - 08

DFT SC1 - PROPOSED PROTECTIVE SETTINGS
UTILITY AND GEN 600V MAIN BREAKERS (PRELIMINARY)

9/1/08

RELAY "A" -600V 3000A UTILITY MAIN BREAKERS - #52U

DEVICE: BASLER MOD # BE1-1051

CT RATIO	3000/5
VT RATIO	600/120
VTX RATIO	600/120
SYNCH PHASES	A-B

IEEE FUNCTION

#25	LIVE - 12.0 SEC P-P VOLTS DEAD - 20.0 SEC VOLTS DELTA PH ANGLE - 10 DEGREES SLIP FREQ. - 0.3 HZ
#25VM	LIVE - 100 SEC P-P VOLTS DEAD - 20 SEC VOLTS DROPOUT DELAY - 200mS
#27P	PU 108V P-P SEC VOLTS TIME: 1000MS "AT LEAST ONE of THREE"
#32	PU - 500kW PRIMARY TIME - 1500mS
#47	PU - 12 P-N VOLTS TIME: 1500mS
#59P	PU: 144V P-P SEC VOLTS TIME: 300MS "AT LEAST ONE of THREE"
#51	PU: 3300 PRIMARY AMPS CURVE: IEEE EXTREMELY INVERSE TD:3
#67	PU: 3600 PRIMARY AMPS TIME: 50MS
#81/181/281/381	ALL : INHIBIT AT 40V P-P SEC VOLTS
#81	UNDER, 59.7 HZ, TD, TIME 500MS
#181	OVER, PU 60.3HZ, TIME 500mS
#281	(NOT USED)

DFT SC1 - PROPOSED PROTECTIVE SETTINGS
UTILITY AND GEN 600V MAIN BREAKERS (PRELIMINARY)

9/1/08

RELAY "B" -600V 3000A GENERATOR MAIN BREAKERS - #52G

DEVICE: BASLER MOD # BE1-1051

CT RATIO	3000/5	
VT RATIO	600/120	
VTX RATIO	600/120	
SYNCH PHASES	A-B	

IEEE FUNCTION

#25	LIVE - 12.0 SEC P-P VOLTS DEAD - 20.0 SEC VOLTS DELTA PH ANGLE - 10 DEGREES SLIP FREQ. - 0.3 HZ
#25VM	LIVE - 100 SEC P-P VOLTS DEAD - 20 SEC VOLTS DROPOUT DELAY - 200mS
#27P	PU 100V P-P SEC VOLTS TIME: 2000MS "AT LEAST ONE of THREE"
#32	PU - 200W SECONDARY TIME - 2000mS
#46	PU - (LATER) TIME: 00MS (46 OR #87G OPERATION INSTANTLY KILL EXCITATION)
#47	PU - 18 P-N VOLTS TIME: 1500mS
#59P	PU: 150V P-P SEC VOLTS TIME: 2000MS "AT LEAST ONE of THREE"
#81/181/281/381	ALL : INHIBIT AT 40V P-P SEC VOLTS
#81	(SPECIAL INPUT TO PILLER - DOES NOT TRIP BREAKER)
#181	(SPECIAL INPUT TO PILLER - DOES NOT TRIP BREAKER)
#281	UNDER, PU 55HZ. TIME 5000mS
#381	OVER, PU 65HZ, TIME 5000mS

DFT SC1 - PROPOSED PROTECTIVE SETTINGS
24.9KV DEVICES (PRELIMINARY)

9/1/08

RELAY "D" -24.9KV DISTRIBUTION FEEDERS

DEVICE: BASLER MOD # BE1-700C

CT RATIO	600/5 MR
VT RATIO	NONE
VTX RATIO	NONE
SYNCH PHASES	NA

IEEE FUNCTION

#51 PHASE	PU - 350 AMPS PRIMARY CURVE - E1 TIME DIAL - 2.0
#50 PHASE	PU - 800 AMPS PRIMARY TIME: 30MS
#51 GROUND	PU - 50 AMPS PRIMARY CURVE - E1 TIME DIAL - 2.0
#50 GROUND	PU - 120 AMPS PRIMARY TIME: 20MS

VACUUM FAULT INTERRUPTERS IN 5MVA TRANSFORMERS

#51 - PHASE	150A PRIMARY AMPS PICKUP, COOPER CURVE "EF"
#51 - GROUND	20A PRIMARY AMPS PICKUP, COOPER CURVE "EF"
#50 - PHASE	800A PRIMARY AMPS, INRUSH RESTRAINT "ON"
#50 - GROUND	80A PRIMARY AMPS PICKUP, GROUND TRIP BLOCK ON INRUSH "ON"

DFT SC1 - PROPOSED PROTECTIVE SETTINGS
24.9KV DEVICES (PRELIMINARY)

9/1/08

RELAY "C" -24.9KV UTILITY MAIN BREAKERS - #52-M-A

DEVICE: BASLER MOD # BE1-1051

CT RATIO	1200/5 MR
VT RATIO	200/1
VTX RATIO	NONE
SYNCH PHASES	NA

IEEE FUNCTION

#25	NOT USED
#27P	NOT USED
#32	PU - 1000kW PRIMARY TIME - 2000mS
#51 PHASE	PU: 800 PRIMARY AMPS CURVE: IEEE EXTREMELY INVERSE TD:3
#51 GROUND	PU: 100 PRIMARY AMPS CURVE: IEEE EXTREMELY INVERSE TD:3
#50 PHASE	4000 PRIMARY AMPS PICKUP TIME: 100MS
#50 GROUND	180 PRIMARY AMPS PICKUP TIME: 50MS
#59P-1	PU: 144V P-P SEC VOLTS TIME: 1000MS "AT LEAST ONE of THREE"
#59P-2	PU: 156V P-P SEC VOLTS TIME: 300MS "AT LEAST ONE of THREE"
#67	PU: 3600 PRIMARY AMPS TIME: 50MS

DFT SC1 - PROPOSED PROTECTIVE SETTINGS
24.9KV DEVICES (PRELIMINARY)

9/1/08

RELAY "D" -24.9KV DISTRIBUTION FEEDERS

DEVICE: BASLER MOD # BE1-700C

CT RATIO	600/5 MR
VT RATIO	NONE
VTX RATIO	NONE
SYNCH PHASES	NA

IEEE FUNCTION

#51 PHASE	PU - 350 AMPS PRIMARY CURVE - E1 TIME DIAL - 2.0
#50 PHASE	PU - 800 AMPS PRIMARY TIME: 30MS
#51 GROUND	PU - 50 AMPS PRIMARY CURVE - E1 TIME DIAL - 2.0
#50 GROUND	PU - 120 AMPS PRIMARY TIME: 20MS

VACUUM FAULT INTERRUPTERS IN 5MVA TRANSFORMERS

#51 - PHASE	150A PRIMARY AMPS PICKUP, COOPER CURVE "EF"
#51 - GROUND	20A PRIMARY AMPS PICKUP, COOPER CURVE "EF"
#50 - PHASE	800A PRIMARY AMPS, INRUSH RESTRAINT "ON"
#50 - GROUND	80A PRIMARY AMPS PICKUP, GROUND TRIP BLOCK ON INRUSH "ON"

DFT SC1 - PROPOSED PROTECTIVE SETTINGS
24.9KV DEVICES (PRELIMINARY)

9/1/08

RELAY "C" -24.9KV UTILITY MAIN BREAKERS - #52-M-A

DEVICE: BASLER MOD # BE1-1051

CT RATIO	1200/5 MR
VT RATIO	200/1
VTX RATIO	NONE
SYNCH PHASES	NA

IEEE FUNCTION

#25	NOT USED
#27P	NOT USED
#32	PU - 1000kW PRIMARY TIME - 2000mS
#51 PHASE	PU: 800 PRIMARY AMPS CURVE: IEEE EXTREMELY INVERSE TD:3
#51 GROUND	PU: 100 PRIMARY AMPS CURVE: IEEE EXTREMELY INVERSE TD:3
#50 PHASE	4000 PRIMARY AMPS PICKUP TIME: 100MS
#50 GROUND	180 PRIMARY AMPS PICKUP TIME: 50MS
#59P-1	PU: 144V P-P SEC VOLTS TIME: 1000MS "AT LEAST ONE of THREE"
#59P-2	PU: 156V P-P SEC VOLTS TIME: 300MS "AT LEAST ONE of THREE"
#67	PU: 3600 PRIMARY AMPS TIME: 50MS

PART I – INTRODUCTION AND OVERVIEW 3

1. APPLICABILITY 3
2. GUIDELINES AND STEPS FOR INTERCONNECTION 3
3. REQUIRED DOCUMENTS 4
   a. *Single-line drawing:* 4
   b. *Site plans and diagrams:* 4
   c. *Transformers:* 4
   d. *Transfer Switch:* 4
   e. *Protective Relays:* 4
4. MAILING INSTRUCTIONS, ASSISTANCE: 4

PART II – IDENTIFYING THE GENERATING FACILITY'S LOCATION AND RESPONSIBLE PARTIES 5

1. CUSTOMER'S GENERATING FACILITY INFORMATION (WHERE WILL THE GENERATING FACILITY BE INSTALLED?) 5
2. CONTACT INFORMATION (WHO SHOULD BE CONTACTED FOR ADDITIONAL INFORMATION, IF NECESSARY?) 5
3. OPERATING DATE (WHAT DATE IS THIS GENERATING FACILITY EXPECTED TO BEGIN OPERATION?) 5

PART III – DESCRIBING THE GENERATING FACILITY AND HOST CUSTOMER'S ELECTRICAL FACILITIES. 6

A. TYPE OF INTERCONNECTION 6
B. WHEN AN INTERCONNECTION AGREEMENT IS REQUIRED. 7
C. GENERATOR MAXIMUM 3-PHASE FAULT CONTRIBUTION. 7
D. GENERATOR OPERATION 7

PART IV – DESCRIBE EACH OF THE GENERATORS (SEE INSTRUCTIONS). USE ADDITIONAL SHEETS, IF NECESSARY. 8

A. GENERATOR INFORMATION 8
B. INSTRUCTIONS FOR PART IV – DESCRIBING GENERATORS 10

PART V – GENERAL INFORMATION 13

1. THIS APPLICATION IS FOR: 13
2. THE GENERATING FACILITY IN THIS APPLICATION IS FOR: 13
3. EXPECTED DATE OF FINAL, SIGNED-OFF BUILDING PERMIT FOR GENERATING FACILITY? 13

APPENDIX A 14

For Isolated Operation (Break-before-Make): Permanent Generator 14
For Isolated Operation (Break-before-Make): Portable Generator 15
For Parallel or Momentary Parallel: 16

Table 1- Break-Before-Make Permanent Generator Caution Stamp 14
Table 2 - Break-Before-Make Portable Generator Caution Stamp 15
Table 3 - Parallel Operation Caution Stamp 16

Part I – Introduction and Overview

1. Applicability

This Generating Facility Interconnection Application may be used to request the interconnection of a Generating Facility to Silicon Valley Power's (SVP) Distribution System.

This Application may be used for any Generating Facility to be operated by or for a Customer and/or Producer to supplement or serve the Customer's electric service requirements that would otherwise be served by SVP, including distributed generation, cogeneration, emergency backup, standby generation, and Net Energy Metered Generating Facilities. A simpler, shorter form is also available from SVP for most Net Energy Metered Generating Facilities. While Customers or Producers operating isolated Generating Facilities are not obligated to enter into an Interconnection Agreement with SVP, some parts of this Application will need to be completed even for Generating Facilities that will be isolated from SVP's Distribution System. Completing this application will satisfy SVP's notice requirements for operating an isolated Generating Facility.

2. Guidelines and Steps for Interconnection

This Application must be completed and sent to SVP along with the additional information indicated below to initiate SVP's review and authorization to interconnect the proposed Generating Facility.

This document is only an application. Upon acceptance, SVP will prepare an Interconnection Agreement for execution by SVP and the "Producer," the party that will be responsible for the Generating Facility. SVP may also require an inspection and testing of the Generating Facility and any related Interconnection Facilities prior to giving the Producer written authorization to Interconnect prior to operating a Generating Facility. SVP's

Customers must not interconnect their Generating Facility with SVP's distribution facilities until they receive written authorization from SVP. Unauthorized interconnections could result in injury to persons and/or damage to equipment and/or property for which the Customer may be liable.

3. Required Documents

a. Single-line drawing:
A Single-line drawing showing the electrical relationship and descriptions of the significant electrical components such as the primary switchgear, secondary switchboard, protective relays, transformers, generators, circuit breakers, with operating voltages, capacities, and protective functions of the Generating Facility, the Customer's loads, and the interconnection with SVP's Distribution System.

b. Site plans and diagrams:
Site plans and diagrams showing the physical relationship of the significant electrical components of the Generating Facility such as generators, transformers, primary switchgear/secondary switchboard, and control panels, the Customer's loads and the interconnection with SVP's Distribution System. Include on your drawing the appropriate "Caution" Stamp for your plan. See Appendix A for the "Caution" options.

c. Transformers:
If transformers are used to interconnect the Generating Facility with SVP's Distribution System, please provide transformer nameplate information (voltages, capacity, winding arrangements, connections, impedances, et cetera)

d. Transfer Switch:
If a transfer switch or scheme is used to interconnect the Generating Facility with SVP's Distribution System, please provide component descriptions, capacity ratings, and a technical description of how the transfer scheme is intended to operate.

e. Protective Relays:
If protective relays are used to control the interconnection, please provide protection diagrams or elementary drawings showing relay wiring and connections, proposed relay settings, and a description of how the protection scheme is intended to function.

4. Mailing Instructions, Assistance:

When this application has been completed it should be brought, along with the required attachments and any applicable fees to:

Electric Department
1500 Warburton Avenue
Santa Clara, CA 95050-3796

For answers to questions or for assistance completing this application, please call (408) 261-5292.

Part II – Identifying the Generating Facility's Location and Responsible Parties

1. **Customer's Generating Facility Information** (Where will the Generating Facility be installed?)

XERES Ventures, LLC (DuPont Fabros Technology – SC1 Data Center)

Name shown on SVP service Account | Electric Account Number

555 Reed Avenue

Street Address

Santa Clara | CA | 95050

City | State | ZIP

XERES Ventures, LLC
1212 New York Ave. – Suite 900

Mailing Address

Washington, DC 20005

City | State | ZIP

202-728-0044 | SC1technicalservices@dft.com

Business Phone | Home Phone | Fax | Email

2. **Contact Information** (Who should be contacted for additional information, if necessary?)

Mr. Dan Hopkins | DuPont Fabros Technology

Contact Person | Company Name (If applicable)

XERES Ventures, LLC
1212 New York Ave. – Suite 900

Mailing Address

Washington, DC 20005

City | State | ZIP

202-538-4618 | dhopkins@dft.com

Business Phone | Fax | Email

3. **Operating Date** (What date is this Generating Facility expected to begin operation?)

March - 2009

Part III – Describing the Generating Facility and Host Customer's Electrical Facilities.

A. Type of Interconnection

Indicate how the Generating Facility will interconnect and operate "in parallel" with SVP's Distribution System for more than one (1) second.

Choose One		
1	2	3

1) **Parallel Operation:** The Generating Facility will interconnect and operate "in parallel" with SVP Distribution System for more than one (1) second.

2) **Momentary Parallel Operation:** The Generating Facility will interconnect and operate on a "momentary parallel" basis with SVP Distribution System for a duration of (1) second or less through switches or circuit breakers specifically designed and engineered for such operation.

3) **Isolated Operation:** The Generating Facility will be "isolated" and prevented from becoming interconnected with SVP's Distribution System through a transfer switch or operating scheme specifically designed and engineering for such operation.

If the answer is option 1, "parallel operation," please supply all of the information requested for the Generation Facility. Be sure to supply adequate information including diagrams and written descriptions regarding the protective relays that will be used to detect faults or abnormal operating conditions on SVP Distribution System.

If the answer is option 2, "momentary parallel operation," only question A, and D of this Part 3 and questions A, B, E, F, I, L, M, N, and S of Part 4 need be answered. Be sure, however, to supply adequate information including diagrams and written descriptions regarding the switching device or scheme that will be used to limit the parallel operation period to one second or less. Please also describe the back up or protective device and controls that will trip the Generating Facility should the transfer switch or scheme not complete the transfer in one second or less.

If the answer is option 3, "Isolated Operation," only questions A, and D of this Part 3 and questions A, B, F, and S of Part 4 need be answered. Be sure, however, to supply adequate information including diagrams and written descriptions regarding the isolating switching device or scheme that will be used to prevent the Generating Facility from operating in parallel with SVP's Distribution System.

B. When an Interconnection Agreement is required.

If the Answer to Question A was option 1, an interconnection agreement will be required.

1) **Interconnection Agreement** that provides for parallel or momentary parallel operation of the Generation Facility, but does not provide for exporting power to SVP's Distribution System.

C. Generator Maximum 3-phase fault contribution.

What is the maximum 3-phase fault current that will be contributed by the Generating Facility to a 3-phase fault at the Point of Common Coupling (PCC)? (If the Generating Facility is single phase in design, please provide the contribution for a line-to-line fault.)

Amps
20,201 Amps, RMS SYM @600V

Please indicate the short circuit interrupting rating of the customer facilities service entrance ("main") panel:

Amps
100,000 Amp, RMS, SYM @600V

D. Generator Operation

v

Please indicate how this Generating Facility will be operated.

Choose One			
1	2	3	**4**

1) **Combined Heat and Power or Cogeneration** – Where the operation of the Generating Facility will produce thermal energy for a process other than generating electricity.

2) **Peak Shaving/Demand Management** – Where the Generating Facility will be operated primarily to reduce electrical demands of the host customer facility.

3) **Primary Power Source** – Where the Generating Facility will be used as the primary source of electric power and that supplied by SVP to the host customer's loads will be required for supplemental, standby or backup power purposes only.

4) **Standby / Emergency / Backup** – Where the Generating Facility will normally be operated only when SVP's electric service is not available.

Part IV – Describe each of the Generators (See Instructions). Use additional sheets, if necessary.

A. Generator Information

	Generator Information	Generator Type 1	Generator Type 2	Generator Type 3	Totals For All Generators
#	Please indicate the Number of each "type" of Generator being installed: (See Instructions)	16			
A (MP&I)	Generator/Inverter Manufacturer (Name)	Detroit Diesel			
B (MP&I)	Generator /Inverter Model (Name/Number)	1020FDS5718			
C	Generator/Inverter Software Version (Number)				
D	Is the Generator Certified by a Nationally Recognized Testing Laboratory (NRTL) according to Rule 21?	Yes No	Yes No	Yes No	
E (MP)	Generator Design (Choose One)	Synchronous Induction Inverter	Synchronous Induction Inverter	Synchronous Induction Inverter	
F (MP&I)	Gross Nameplate Rating (KVA)	2813			
G	Gross Nameplate Rating (KW)	2500 @ 105°C			
H	Net Nameplate Rating (KW)	2250			
I (MP)	Operating Voltage (Volts or kV)	600Y/347V			
J	Power Factor Rating (%)	.80			
K	PF Adjustment Range (%)	Min: .8 Lag Max: .95 Lead	Min. _____ Max. _____	Min. _____ Max. _____	
L (MP)	Wiring Configuration (Choose One)	Single-Phase Three-Phase	Single-Phase Three-Phase	Single-Phase Three-Phase	

	Generator Information	Generator Type 1	Generator Type 2	Generator Type 3
M (MP)	3-Phase Winding Configuration (Choose One)	3 Wire Delta 3 Wire Wye 4 Wire Wye	3 Wire Delta 3 Wire Wye 4 Wire Wye	3 Wire Delta 3 Wire Wye 4 Wire Wye
N (MP)	Neutral Grounding System Used (Choose One)	Ungrounded Solidly Grounded Ground Resistor 50 Ohms	Ungrounded Solidly Grounded Ground Resistor _____Ohms	Ungrounded Solidly Grounded Ground Resistor _____Ohms
O	*For Synchronous Generators Only:* Synchronous Reactance: Transient Reactance: Subtransient Reactance:	 1.906 P.U. (Xd %) 18.7 % (X'd %) 13.4 % (X''d %)	 _____ (Xd %) _____ (X'd %) _____ (X''d %)	 _____ (Xd %) _____ (X'd %) _____ (X''d %)
P	*For Induciton Generators Only:* Locked Rotor Current: OR *Stator Resistance*: Stator Leakage Reactance: Rotor Resistance: Rotor Leakage Reactance:	 ---------- (Amps) ----------(%) ----------(%) ----------(%) ----------(%)	 ---------- (Amps) ----------(%) ----------(%) ----------(%) ----------(%)	 ---------- (Amps) ----------(%) ----------(%) ----------(%) ----------(%)
Q	Short Circuit Current Produced by Generator: (Amps)	20.2 kA RMS SYMETRICAL		

	Generator Information	Generator Type 1	Generator Type 2	Generator Type 3
R	*For Generators that are Started as a "Motor" Only* 1) In-Rush Current: 2) Host Customer's Service Entrance Panel (Main Panel) Continuous Current Rating:	---------- (Amps) ---------- (Amps)	---------- (Amps) ---------- (Amps)	---------- (Amps) ---------- (Amps)
S (MP&I)	Prime Mover Type: (Choose One)	1 [2] 3 4 5 6 7 8 9 10 11 12 13	1 2 3 4 5 6 7 8 9 10 11 12 13	1 2 3 4 5 6 7 8 9 10 11 12 13

B. Instructions for Part IV – Describing Generators

	Generator Information	Instruction & Comments
#	Please indicate the number of each "type" of Generator being installed:	Please provide the following information for each Generator "type". Be sure all Generators classified as one "type" are identical in all respects. If only one type of Generator is to be used, only one column needs to be completed. Please be sure the information in the "Totals" column is correct and reflects the total number of Generator units to be installed.
A	Generator / Inverter Manufacturer	Enter the brand name of the Generator.
B	Generator / Inverter Model	Enter the model name or number assigned by the manufacturer of the Generator.
C	Generator / Inverter Software Version	If this Generator's control and or protective functions are dependent on a "software" program supplied by the manufacturer of the equipment, please provide the version or release number for the software that will be used.
D	Is the Generator Certified by a Nationally Recognized Testing Laboratory (NRTL) according to Rule 21?	Answer "Yes" only if the Generator manufacturer can or has provided certification data. See PG&E's Rule 21, Section J for additional information regarding Generator certification.

	Generator Information	Instruction & Comments
E	Generator Design	Please indicate the design of each Generator. Designate "Inverter" anytime an inverter is used as the interface between the Generator and the electric system regardless of the primary power production/storage device used.
F	Gross Nameplate Rating (kVA)	This is the capacity value normally supplied by the manufacturer and stamped on the Generator's "nameplate". This value is not required where the manufacturer provides only a "kW" rating. However, where both kVA and kW values are available, please indicate both.
G	Gross Nameplate Rating (kW)	This is the capacity value normally supplied by the manufacturer and stamped on the Generator's "nameplate". This value is not required where the manufacturer provides only a "kVA" rating. However, where both kVA and kW values are available, please indicate both.
H	Net Nameplate Rating (kW)	This capacity value is determined by subtracting the "Auxiliary" or "Station Service" loads used to operate the Generator or Generating Facility.
I	Operating Voltage	This value should be the voltage rating designated by the manufacturer and used in this installation. Please indicate phase-to-phase voltages for 3-phase installations. See SVP's SD 1631 Section 2.1.1 for additional information.
J	Power Factor Rating	This value should be the nominal power factor rating designated by the manufacturer for the Generator. See SVP's SD 1631 Section 2.1.6 for additional information.
K	Power Factor Adjustment Range	Where the power factor of the Generator is adjustable, please indicate the maximum and minimum operating values. See SVP's SD 1631 Section 2.1.6 for additional information.
L	Wiring Configuration	Please indicate whether the Generator is a single-phase or three-phase device. See SVP's 1631 Section 2.2.2.1 for additional information.
M	3-Phase Winding Configuration	For three-phase generating units, please indicate the configuration of the Generator's windings or inverter systems.
N	Neutral Grounding	Wye connected generating units are often grounded – either through a resistor or directly, depending upon the nature of the electrical system to which the Generator is connected. If the grounding method used at this facility is not listed, please attach additional descriptive information.

	Generator Information	Instructions and Comments
O	*For Synchronous Generators Only:*	If the Generator is of a "synchronous" design, please provide the synchronous reactance, transient reactance, and subtransient reactance values supplied by the manufacturer. This information is necessary to determine the short circuit contribution of the Generator and as data to be input in load flow and short circuit computer models of SVP's distribution system. If the Generator's Gross Nameplate Capacity is 10 MW or greater, SVP may request additional data to better model the nature and behavior of the Generator with relation to its Distribution and subtransmission system.
P	*For Induction Generators Only:*	If the Generator is of an "induction" design, please provide the "locked rotor current" value supplied by the manufacturer. If this value is not available, the stator resistance, stator leakage reactance, rotor resistance, rotor leakage reactance values supplied by the manufacturer may be used to determine the locked rotor current. If the Generator's Gross Nameplate Capacity is 10 MW or greater, SVP may request additional data to better model the nature and behavior of the Generator with relation to its Distribution and subtransmission system.
Q	Short Circuit Current Produced by Generator	Please indicate the current each Generator can supply to a three-phase fault across its output terminals. For single phase Generators, please supply the phase-to-phase fault current.
R	*For Generators that are Started as a "Motor" Only:* 1) In-Rush Current 2) Customer's Service Entrance Panel (Main Panel) Continuous Current Rating	This information is needed only for Generators that are started by "motoring" the generator. Refer to SD 1630, Screen 6. for significance and additional information.

	Generator Information	Instructions and Comments
S	Prime Mover Type	Please indicate the type and fuel used as the "prime mover" or source of energy for the Generator. 1) Internal Combustion Engine – Natural Gas/ Propane Fueled. 2) Internal Combustion Engine – Diesel Fueled 3) Internal Combustion Engine – Other Fuel 4) Microturbine (<250 kW) – Natural Gas/Propane Fueled 5) Microturbine – Other Fuel 6) Combustion Turbine (>250 kW) Natural Gas/ Propane Fueled 7) Combustion Turbine – Othe fuel 8) Steam Turbine 9) Photovoltaic Panels 10) Solar-thermal engine 11) Fuel Cell – Natural Gas/Propane Fueled 12) Fuel Cell – Other Fuel 13) Other (please describe)

Part V – General Information

1. **This application is for:**

   ☐ A new (proposed) NM Generating Facility that has not previously been approved for interconnection by SVP.

   ■ An existing Generating Facility to which generator modifications are being made.

   ☐ An existing NM Metering Facility which has previously been approved for interconnection by SVP and for which the account has been closed or had a change in the name on the bill.

2. **The Generating Facility in this Application is for:**

   ■ An existing SVP account.

   ☐ A new SVP account

3. **Expected Date of final, Signed-Off Building Permit for Generating Facility?**

   Date:___March - 2009_____

Appendix A

For Isolated Operation (Break-before-Make); Permanent Generator

As a general rule for "Non-Utility Generator" installations, **The following Notes shall be included and shown in the electrical drawings (General Arrangement Drawing, Electrical One Line Diagram, etc.) submitted for SVP Electric Department review:**

Notes (General Requirements for Non-Utility Generator Installations):

1. This Non-Utility Generator installation is not approved for parallel operation with SVP Electric Utility.
2. The "Non-Utility Generator" installation shall be connected to the utility with an Automatic Transfer Switch designed/intended for a "Break-Before-Make" mode of operation.
3. The Automatic Transfer Switch shall have a failsafe interlock mechanism that blocks source-to-source interconnection and prevent the Non-Utility Generator to run and operate in parallel with the SVP Electric Utility source.
4. The installation shall have a visible sign in front of the Automatic Transfer Switch Control with the following information clearly visible to the operator:

CAUTION
Do not by-pass or operate the "Automatic Transfer Switch" to run or operate the Non-Utility Generator in parallel with the SVP Electric Utility source This "Non-Utility Generator" is not an approved installation for operating in parallel with the Electric Utility Source.

Table 1- Break-Before-Make Permanent Generator Caution Stamp

5. A return to utility time delay minimum setting of TEN MINUTES is recommended to keep the load on the generator set until a stable utility line is present. This switching operation shall be "Break-Before-Make" mode of transfer operation.
6. All switching operations shall be "Open-Transition-Mode" only.
7. The extent of SVP's review is limited only to the operational aspects of the design to be in compliance with the Utility's non-parallel generator interconnection.

For Isolated Operation (Break-before-Make); Portable Generator

As a general rule for "Non-Utility Generator" installations, **The following Notes shall be included and shown in the electrical drawings (General Arrangement Drawing, Electrical One Line Diagram, etc.) submitted for SVP Electric Department review:**

Notes (General Requirements for Non-Utility Generator Installations):

1. This Non-Utility Generator receptacle installation is not approved for parallel operation with SVP Electric Utility.
2. The "Non-Utility Generator" installation shall be connected to the utility with a Manual Transfer Switch designed/intended for a "Break-Before-Make" mode of operation.
3. The Transfer Switch shall have a failsafe interlock mechanism that blocks source-to-source interconnection and prevent the Non-Utility Generator to run and operate in parallel with the SVP Electric Utility source.
4. The installation shall have a visible sign in front of the generator receptacle or Manual Transfer Switch Control with the following information clearly visible to the operator:

CAUTION

Do not by-pass or operate the " Transfer Switch" to run or operate the Non-Utility Generator in parallel with the SVP Electric Utility source

This "Non-Utility Generator" is not an approved installation for operating in parallel with the Electric Utility Source.

Table 2 - Break-Before-Make Portable Generator Caution Stamp

5. A return to utility time delay minimum setting of TEN MINUTES is recommended to keep the load on the generator set until a stable utility line is present. This switching operation shall be "Break-Before-Make" mode of transfer operation.
6. All switching operations shall be "Open-Transition-Mode" only.
7. The extent of SVP's review is limited only to the operational aspects of the design to be in compliance with the Utility's non-parallel generator interconnection.

For Parallel or Momentary Parallel;

The installation shall have a visible sign in front of the Automatic Transfer Switch Control with the following information clearly visible to the operator:

Refer to SD1631 "Engineering & Operating Requirements for the Interconnection of Generating Facilities"

CAUTION

Customers must not interconnect their Generating Facility with SVP's distribution facilities until they receive written authorization from SVP. Unauthorized interconnections could result in injury to persons and/or damage to equipment and/or property for which the Customer may be liable.

408.615.5640

Table 3 - Parallel Operation Caution Stamp