2.0 FACILITY DESCRIPTION AND LOCATION

2.1 OVERVIEW

The CPV Sentinel Energy Project (CPVS, or proposed project) is a proposed nominally rated 850-megawatt (MW) electrical generating facility. The power plant site encompasses 37 acres of land situated within unincorporated Riverside County, California.

The proposed project consists of eight natural gas-fired General Electric (GE) LMS100 combustion turbine generators (CTGs) operating in simple cycle mode. The project will supply quick-start peaking capacity, energy, and ancillary services into the California Independent System Operator's (CAISO) Los Angeles Basin Local Capacity Requirement (LCR) Area, which has been identified as an area in need of additional peaking capacity to meet resource adequacy requirements and ensure grid reliability.

The proposed project will be constructed, commissioned, owned, and operated by CPV Sentinel, LLC (CPV Sentinel). CPV Sentinel anticipates selling the capacity, energy, and ancillary services under long-term contract to one or more load serving entities. CPV Sentinel has a power purchase agreement with Southern California Edison (SCE) for five of the units and anticipates securing an agreement to sell the capacity, energy, and ancillary services under long-term contract to one or more load-serving entities for the remaining three units.

Construction of the power plant would occur over an 18-month period (from December 2008 to May 2010). Operation of the first five turbine units is planned to begin by March 2010, and the final three units are planned to begin operation in May 2010. Construction is expected to cost approximately $440 million.

The primary proposed project features include the following:

- A power plant on a 37-acre property, including a 3/4-acre retention basin and onsite water supply wells;
- A 2.6-mile-long natural gas line extending from the existing Indigo Energy Facility;
- A 3,250-foot-long transmission line connecting to the existing Devers substation;
- A 3,200-foot-long road extending off Dillon Road to the project site and associated intersection widening at Dillon Road and the site access road;
- A 3,200-foot-long potable water supply line extending off Dillon Road to the project site; and
- A 14-acre construction laydown area.

The 37-acre proposed power plant site is currently vacant, with the exception of an unoccupied dwelling unit at the southeastern corner of the site. The surrounding area is primarily characterized by industrial use with extensive development of wind energy and transmission infrastructure. The Devers substation is approximately 700 feet to the west of the proposed project site and the Indigo Energy Facility is approximately 1.8 miles to the southeast. The nearest current residence to the power plant site is approximately 330 feet to the east. CPV Sentinel has an option to acquire this property. The project site was selected to optimize nearby access to a natural gas fuel supply line and tie-in location to the SCE transmission system at the Devers substation, as well as to minimize environmental impacts.

The proposed power plant site is zoned W-2 (Controlled Development Area) and designated as PF (Public Facilities) in the *Riverside County General Plan*. Electrical power-generating facilities are permitted uses within this zoning district and General Plan designation.

Electricity generated by the proposed project will be delivered to the existing SCE Devers substation via a generation tie connecting the project station switchyard to the Devers substation at the 220-kilovolt (kV) bus. It is currently anticipated that SCE will execute contracts with CPV Sentinel under which SCE will be responsible for final design, engineering, construction, operation, and maintenance of the generator tie to the Devers substation. SCE will seek a Certificate of Public Convenience and Necessity (CPCN) from the California Public Utilities Commission (CPUC). The environmental impacts associated with constructing and operating the transmission line are being analyzed in this CEC proceeding. Transmission facilities are discussed in further detail in Chapter 4.

Fuel will be supplied by an extension of a 24-inch-diameter natural gas line extending from the Indigo Energy Facility. Fuel supply is discussed in further detail in Chapter 5.

The proposed project will use a cooling tower for LMS intercooler and oil cooling. Water for power plant operations will be provided by the Mission Springs Water District (MSWD). Reclaimed water will be supplied by the Mission Springs Water District's Horton Wastewater Treatment Plant (WWTP), located approximately 5 miles from the project site (Figure 1.1-1). Wastewater from the Horton WWTP will be treated to tertiary levels by a newly constructed tertiary treatment system funded by the MSWD. The expansion of the wastewater treatment plant is an independent project formerly planned by the MSWD, and it will conduct its own environmental review of the expansion. The reclaimed water will be sent to existing percolation ponds located adjacent to the Horton WWTP, where it will percolate into the underlying Coachella Valley Groundwater Basin (Basin) and be banked for later use by the proposed project. The Horton WWTP will supply, on average, 1,500 acre-feet per year (afy) of reclaimed water. Of this, the proposed project operations will use a maximum of 1,100 afy. The proposed project will access its banked water supply via onsite or nearby wells that overlie the same Basin.

The proposed project will also include installing a potable water line extension from a current municipal water line existing along Dillon Road. Water supply is discussed in further detail in Chapter 6.

The proposed project will use a zero liquid discharge (ZLD) system, comprised of membrane-based wastewater treatment processes (microfiltration and reverse osmosis) coupled with a crystallizer system. This process will result in zero liquid wastewater discharge from the site.

2.2 PROJECT LOCATION

The proposed project site is located approximately 1.3 miles east of State Route (SR) 62 (also referred to as Twentynine Palms Highway), 1.7 miles north of Interstate 10 (I-10), and 1.3 miles west of Indian Avenue. Powerline Roads North and South run along the south side of the property. Access to the site will be available from Dillon Road north onto the proposed access road to the project site. Access to Dillon Road is from the Dillon Road exit off SR 62 and from the Indian Avenue exit off the I-10. The location of the proposed project site is shown on Figure 1.1-1.

The main project features will consist of a 37-acre power plant site, 14-acre construction laydown area, 3,250 feet of transmission lines, and 2.6 miles of natural gas pipeline. The power plant, transmission lines, and portions of the gas line and construction laydown area will be located within unincorporated Riverside County. Portions of the construction laydown area and portions of the proposed gas line route will be located within the city of Palm Springs. The site is situated approximately 8 miles northwest of the center of Palm Springs and 4.5 miles west of the center of Desert Hot Springs.

The power plant site is located in portions of the southeastern quarter and portions of the southwestern quarter of Section 4, Township 3 south, and Range 4 east of the Desert Hot Springs 7.5-Minute Topographic Map. Table 2.2-1 lists parcels of the power plant site and project features by Section, Township, and Range. Appendix A provides a list of parcel owners for areas within 1,000 feet of the proposed project site and 500 feet of project features.

The 37-acre power plant site is located on the following three Assessor's Parcel Numbers (APNs):

- APN 668-130-005; owned by D&F Land Co
- APN 668-130-007; owned by Wintec Properties, LLC
- APN 668-140-001; owned by D&F Land Co

The first two listed parcels and the northern portion of the third parcel encompass most of the site (35.5 acres) and are currently undeveloped. The southern portion of the third parcel is currently improved with a vacant single-family dwelling, a detached garage, a domestic water well, and a septic system. The onsite house has the address of 62575 Powerline Road. The construction area, including laydown and parking, will consist of a 14-acre portion of APN 668-270-010, situated 580 feet south of the power plant site.

CPV Sentinel controls an Option to Lease the proposed project site for a period exceeding 30 years. The three project site parcels can be merged prior to initiating construction by filing an application for a Certificate of Parcel Merger with Riverside County Planning Department. This would occur approximately 6 months prior to initiating construction. The County has indicated that the parcel merger is a ministerial process that is typically approved within about 1 month of application submittal. The parcel containing the construction laydown area is owned by D&D Land Company. No structures are currently located on the construction laydown area. The Option to Lease agreement between the landowner and CPV Sentinel provides for the project use of the construction laydown area.

2.3 POWER PLANT SITE DESCRIPTION

The power plant will be situated on a 37-acre site, as shown on Figure 2.3-1. The proposed project includes 85 acres of disturbance during construction, including construction of the power plant and offsite linears (transmission line, gas line, access road, and potable water line). Of the 85 acres of construction disturbance, 24.5 acres will be returned to pre-project conditions after the project is constructed and 60.5 acres will remain permanent disturbance. The permanent disturbance includes the 37-acre project site, the pre-existing 14-acre construction laydown area, and 9.5 acres for the project linear right-of-ways.

The proposed project site is currently undeveloped, with the exception of a vacant dwelling and associated features (i.e., water well, garage) situated on the southeastern portion of the site. The owner of the dwelling, garage, and appurtenances will be dismantling and removing the dwelling and garage from the site prior to commencement of project construction.

The surface of the site slopes generally down to the southeast, but is broken occasionally by low ridges and drainage channels. The surface contains gravel, cobbles, and occasional boulders up to 1 foot in diameter. Vegetation consists generally of scrub brush. No long-term natural or artificial water bodies are in the vicinity of the site. The site topography is shown on Figure 2.3-2.

The proposed project site is in the seismically active Southern California portion of the San Andreas Fault system (Hutton et al., 1991). Earthquakes of magnitude 5 and smaller can occur virtually anywhere in the project region (Hutton et al., 1991), while most earthquakes of magnitude 6 or greater are associated with Quaternary fault structures. The nearest significant Quaternary fault to the site is the Banning segment of the San Andreas Fault about 0.25 mile southwest of the site.

2.4 FACILITY DESCRIPTION

The proposed project consists of eight natural gas-fired, GE Energy LMS100 CTGs operating in simple cycle mode. Each exhaust stack will be 13.5 feet in diameter and 90 feet tall. The proposed project will produce up to 850 MW. Under certain ambient conditions, each CTG will produce approximately 100 MW and the plant is expected to operate to meet customer demand within the permit limits.

The facility will employ proven gas turbine technology that is currently in use in the United States and will use Best Available Control Technology (BACT) to minimize gas turbine emissions. To achieve BACT, the emissions control system will use state-of-the-art, water-injected combustors with selective catalytic reduction (SCR) and oxidation catalyst. Sections 2.4.7 and 7.1 address plant emissions and emissions controls.

The combustion turbines will use water injection to reduce oxides of nitrogen (NO_X) air emissions, SCR to further reduce NO_X emissions, and oxidation catalysts to reduce carbon monoxide (CO) emissions. Auxiliary equipment will include a spray mist fogging system for cooling the inlet combustion air to improve efficiency and output of the facility; a turbine intercooler; two mechanical draft cooling towers (one 5 cell and one 3 cell), each with circulating water pumps; natural gas compressors; generator step-up transformers; emergency generator; fire water pump skid; and water storage tanks. The proposed project will use a crystallizer ZLD system to handle project wastewater.

The project's design criteria are provided in Appendices B through F.

2.4.1 Power Plant Site Arrangement

The proposed project plot plan is shown in Figure 2.4-1, and elevation drawings are provided in Figures 2.4-2 and 2.4-3. A plant rendering is also provided in Figure 1.4-2. A fence will surround the power plant. Major equipment and significant structures are listed in Tables 2.4-1 and 2.4-2, respectively.

Major equipment will be arranged to facilitate construction and provide operational and maintenance access. The eight parallel CTG simple cycle trains will be arrayed from north to south across the plant site (Units 1 through 8, respectively). Transformers located west of each CTG simple cycle train will connect to the grid through the 220-kV switchyard located in the west portion of the plant site. Approximately 3,250 feet of transmission line will connect the plant switchyard to the existing SCE grid at the Devers substation.

Fuel gas metering will be located in the eastern portion of the site. Two gas compressor buildings containing gas compressors will also be located along the eastern portion of the site.

The plant control room is located in the operations building east of Unit 4. This location was selected to facilitate the phased commercial operation of the units and to optimize instrumentation and control cable runs, and operator foot travel to the main plant equipment.

Cooling towers with blowdown stream treatment will provide cooling water to the unit intercoolers. The ZLD system provides purified water to supplement the cooling tower raw water makeup requirement and perhaps supplemental feed to the plant makeup demineralizer system as well as producing solid waste residuals for off site disposal. Other wastewater streams are recovered within the plant for reuse or are forwarded to the ZLD system for treatment.

The water treatment area, located adjacent to the ZLD system, will use mobile (trailer) ion exchange–type demineralizers for the production of high-purity demineralized water to be used in the power cycle, including supply for water injection and inlet air foggers. These mobile demineralizer trailers will be regenerated off site and rinse waters generated during the exchange of demineralizer systems will be

recovered as cooling tower makeup. The raw water storage tanks and treated water storage tanks will be located adjacent to each water treatment area—one set near north end of the proposed project site and the other set towards the south end of the site. The northern raw water storage tank will also include a reserve volume to supply the fire water system. The fire water pump enclosure will be adjacent to this tank.

Plant roads will provide access throughout the plant to accommodate truck deliveries, access for routine maintenance, and access for fire protection.

2.4.2 Power Plant Cycle

CTG combustion air will flow through inlet air filters and inlet fog nozzle array via associated air inlet ductwork, will be compressed, and then flow to the CTG combustion sections. Natural gas fuel will be injected into the compressed air in the combustion sections and ignited. The hot combustion gases will expand through the turbine sections of the CTGs, causing them to rotate and drive the electric generators and CTG compressors. The hot combustion gases will exit the turbine sections through a vertical stack. The stack will discharge the gases to the atmosphere at a temperature in the range of mid-700s to approximately 800 degrees Fahrenheit (ºF) range at a height of 90 feet above ground level. At this temperature and elevation, the gases will mix with ambient air and be dispersed.

2.4.2.1 Combustion Turbine Generator

Thermal energy will be produced in the CTG through the combustion of natural gas, which will be converted to mechanical energy required to drive the combustion turbine compressors and generators. Eight GE LMS100 CTGs have been selected for this project. The CTGs will have water injection systems to control exhaust gas oxides of nitrogen (NO_X). Each CTG system will consist of a stationary CTG with supporting systems and associated auxiliary equipment. The CTGs will have the following accessories for safe and reliable operation:

- Inlet air filter system with inlet fog cooling
- Intercooler (cooled via cooling tower)
- Fuel gas system
- Lubricating and hydraulic oil systems
- Oil coolers
- Compressor wash system with on-line and off-line capability
- Fire protection system
- Turbine generator controls.

The generators will be three-phase, synchronous electrical generators and be air-cooled. They will be designed to deliver power to the grid at 60 Hertz (Hz).

2.4.2.2 Performance Data

Key elements of the performance data compilation are power output, fuel input, and heat rate. Performance runs (computer calculations of combustion turbine operating characteristics at specified conditions) were prepared and are shown in Table 2.4-3 for typical operation conditions at 50, 75, and 100 percent rated load and under three ambient conditions: 17°F (nominal minimum), 72°F (annual average), and 107°F (ASHRAE 2 percent Dry Bulb Condition). The performance summary includes cases with and without the evaporative/fogged cooling for the 72°F and 107°F full load runs. The Heat and Mass Balance Diagram is provided in Figure 2.4-4 and Table 2.4-3.

2.4.2.3 Emissions Data

Air emissions are affected by turbine design and operating conditions. Along with the gas turbine performance data, the turbine manufacturers provide predicted emissions levels. Emissions data for these GE LMS100 turbines are provided in Section 7.1.

To evaluate effects of this facility on ambient air quality (discussed in Section 7.1), emissions modeling was performed for the CTG stack operating condition at the same conditions described in the preceding section.

Emissions data, as used for this modeling, are representative of levels that the manufacturer currently guarantees or of levels measured in actual tested conditions.

2.4.3 Major Electrical Equipment

Power will be produced at 13.8 kV by the CTGs. The generators will be connected to the plant step-up transformers, where the voltage will be increased to a transmission level of 220 kV.

A portion of the plant output will be converted to 4,160 volts (V) and lower voltages to power station auxiliaries. Essential control systems will be protected with an AC uninterruptible power supply (UPS). A 125-VDC system will provide battery power for the AC UPS and for DC control systems.

2.4.3.1 Step-up Transformers

Each CTG will be connected to a two-winding, oil-filled, 13.8-kV/220-kV generator step-up transformer. Connection to the step-up transformer will be made through a segregated bus duct to the generator breaker. The transformers will be anchored on concrete foundations that also provide oil containment. The high side of each step-up transformer will be terminated at the plant 220-kV switchyard. Surge arrestors will be installed on the high-voltage bushings of each transformer to protect the transformer from surges due to lightning strikes, switching, or other disturbances on the 220-kV system.

2.4.3.2 230-kV Switchyard

Each step-up transformer will be connected to the grid through a 220-kV switchyard. The switchyard will contain 220-kV SF6 circuit breakers in single-bus configuration. A single-circuit, 220-kV transmission line will be installed to connect the plant switchyard to the existing SCE grid at the Devers substation. Grounding switches will be used on both ends of the transmission line connecting the facility to the Devers substation. A Capacitor Coupled Voltage Transformer (CCVT) will be installed on the outgoing 220-kV transmission line section for metering and relaying. The overall one-line diagram is provided as Figure 2.4-5.

2.4.3.3 AC Power Distribution

Plant auxiliaries are powered at 4,160 V, 480/277 V, and 208/120 V. The auxiliary power will be supplied from the switchyard to the auxiliary power transformers, which feed the Balance of Plant (BOP) 5-kV and 480-V switchgear. All CTG and BOP loads will be supplied by these switchgears. The 5-kV switchgear will consist of vacuum circuit breakers and medium voltage motor starters. The 480-V switchgear will consist of draw-out metal-clad switchgear and Motor Control Centers (MCC) to supply power for BOP motors, CTG motors, BOP equipment, and vendor equipment. The lighting, general purpose power, and heating, ventilation, and air conditioning (HVAC) loads will be powered from the 480/277-V and 208/120-V electrical distribution panels located in the main electrical distribution room and throughout the facility.

The 4,160-V system will be low-resistance grounded. The 480/277-V system will be solidly grounded. Power for the 208/120-VAC system will be provided by the low-voltage MCCs through 480-208Y/120 V dry-type transformers.

2.4.3.4 DC Power Supply

Each combustion turbine will have its own 125-, 48-, and 24-VDC power supply systems consisting of multiple battery racks, chargers, and distribution panels, as provided by the CTG vendor. A separate station 125-V power system and panel will be provided for switchyard and electrical switchgear relaying and metering.

2.4.3.5 Uninterruptible Power Supply System

The UPS will provide 120-V critical power for the facility, including the main control system and other required critical controls. The UPS inverter will be fed from the 480-V BOP switchgear. The UPS will contain an isolation transformer/ inverter that has manual bypass and maintenance bypass capabilities. The UPS inverter will feed a UPS 120/208-V three-phase distribution panel that will supply all required UPS loads. The UPS will have dual feed capabilities. The system will have a 45-minute load profile to accommodate the operators to perform an orderly shutdown of the facility in the event of a facility blackout.

2.4.3.6 Emergency Power System

The emergency power system is separate from the UPS power system and will consist of strategically located battery-powered emergency lighting to allow systems shutdown and egress of the building and equipment in the event of a facility blackout.

2.4.3.7 Black Start System

A black start generator will be provided that will allow any single gas turbine to be started. After one gas turbine is running, its power output may be used to start the other turbines. This provision will allow the power plant to start and feed the 220-kV line to the Devers substation in the event of a wide-scale power outage.

2.4.3.8 Automatic Generation Control

The units will be equipped with Automatic Generation Control (AGC). AGC equipment allows generation output to be controlled via remote dispatch signals from the CAISO in real time in order to provide regulation ancillary services.

2.4.4 Water Supply and Treatment

2.4.4.1 Water Balance and Supply Requirements

Construction water will be supplied by the existing onsite well, the future water supply well(s), or by water truck(s). Average daily use of construction water is estimated to be about 25,673 gallons, primarily for dust control, but will vary depending on the activities being performed and weather conditions. Table 2.4-4 summarizes estimated quantities of construction water over the 18-month construction period. The maximum daily water usage is estimated at 250,000 gallons during hydrotesting of the pipelines, tanks, equipment, and associated piping. The hydrotest water will be tested and, if suitable for discharge, will be routed to the retention basin. If the water quality is not suitable for discharge, it will be transported by trucks to an approved offsite disposal facility.

Plant operations will require up to 1,100 afy of water, with an expected flow range of 1,626 gallons per minute (gpm) to 2,059 gpm with all eight units operating. The project's water balance requirements are listed in Table 2.4-5 and illustrated on Figure 2.4-6. Table 2.4-6 provides a summary of expected maximum, typical, and annualized water usage rates.

The proposed project will require approximately 1,975 gpm of raw water makeup when operating at full plant load during average summer ambient conditions 90°F, 30.2 percent relative humidity (RH) (see Table 2.4-5). Maximum water requirements on a peak ambient summer day (120°F, 12.7 percent RH) will be 2,059 gpm. Key plant raw water uses will include makeup to the cooling tower systems, makeup to the mobile demineralizer system (MDS), and makeup to the service water system. Approximately five water supply wells will be installed on the project site; the final number will depend on the results of a well test program to determine the characteristics of the groundwater at the site. Water will be routed from these wells to the raw water storage tanks via one or more water lines. The groundwater quality was evaluated by testing water from the existing onsite domestic well. The results of testing of water from this onsite well are provided in Table 2.4-7. The onsite storage tanks have the capacity for approximately 24 hours of operation. In addition, one of the raw water storage tanks contains a fire water reserve, accessible only to the fire water pumps, equal to 2 hours of fire system flow. Demineralized water will be produced onsite by mobile trailer units containing demineralized water systems.

Potable water will be supplied by MSWD from a buried potable water line that would be installed along the site access route from Dillon Road to the proposed project site. Potable water requirements are expected to average 2 afy. Water supply is discussed further in Chapter 6.

2.4.4.2 Water Treatment Requirements

Water treatment requirements for the proposed project will vary depending on the specific use of the water. The following describes the main water treatment requirements:

- The raw water will be chlorinated as needed to minimize biofouling and will be used as makeup to the service water system, the mobile demineralizer system, and the cooling tower.

- The facility will require potable water for personnel consumption, eyewash stations, showers, and sanitary needs. This water will be provided from a local municipal water source off Dillon Road, and no onsite treatment is required.

- Sanitary waste will be treated via an onsite septic system.

- Demineralized water will be produced by the mobile, ion exchange-based demineralizer system. The following plant demineralized water uses are anticipated:

  – The combustion turbine air inlet foggers require demineralized water quality, with low dissolved and suspended solids. This prevents ingestion of compounds that could foul or damage the turbine or increase particulate emissions.

  – Demineralized water quality is required for turbine water injection (NO_X control). This prevents ingestion of compounds that could foul or damage the turbine or increase particulate emissions.

  – Demineralized water will also be used for miscellaneous plant uses, such as periodic CTG washes, makeup of various chemical feed, and cleaning solutions.

2.4.4.3 Water Treatment Systems

Raw Water System

Raw water will be pumped from the production wells to the raw water storage tanks. Sodium hypochlorite will be available to be added as needed to control biofouling in the tank and associated piping systems.

Cooling Tower Systems

Various chemicals will be available to be added to the cooling tower makeup water and circulating water to control the circulating water chemistry to control scaling, corrosion, and biofilm formation. The chemical feeds expected to be used are (1) intermittent or continuous sodium hypochlorite feed (to circulating water) to maintain a small residual chlorine concentration for biofilm control, (2) sulfuric acid feed (to makeup water) to control the circulating water pH and alkalinity, and (3) a proprietary dispersant/corrosion inhibitor to control potential scaling and corrosion.

Demineralized Water System

A mobile, trailer-mounted, ion exchange demineralizer system will be used to produce high-purity demineralized water from a blend of raw water and recovered wastewater. Each trailer system will be used until its ion exchange capacity is exhausted. At that point, new trailers will be exchanged for the exhausted trailers. The exhausted trailers will be chemically regenerated off site by the supplier.

2.4.4.4 Wastewater Treatment and Discharge

The proposed project is designed to be a ZLD facility. No liquid process wastes will be discharged from the plant. These wastewaters will be recovered and treated for reuse within the plant. Wastes (both liquid and solid) that are not reused will be collected and disposed off site at a suitable facility.

The plant's process wastewater will consist primarily of cooling tower blowdown, service water system wastewater, fogger drains, mobile demineralizer drains and rinses, and ZLD treatment system wastes (liquid and solid).

Collection, Treatment, and Disposition of Liquid Process Wastes

The following describes the treatment and disposition of the various liquid wastes to be generated at the proposed plant.

The diagram and table showing water balance requirements (Figure 2.4-6 and Table 2.4-5) show the expected wastewater streams and flow rates for the various plant processes. The flow rates shown are based on summer maximum (at 100 percent load) and annual average summer conditions (at 100 percent load).

Service Water System

An oil/water separator (OWS) system will be installed at the east portion of the site to collect wastewater from equipment washdowns and leakage, sample drains, and miscellaneous plant drains. Water from areas that may accumulate small amounts of oil and miscible chemicals will be collected in a system of floor drains, sumps, and piping and routed through the OWS. After passing through the OWS, water from the clean effluent chamber will be recovered as cooling tower makeup.

The OWS will be a small, skid-mounted, enclosed unit. Oil and sludge from the OWS will be collected and sent offsite for suitable treatment and recycling.

Mobile Demineralizer System

Rinse and draindown waters generated during the exchange of trailers will be collected and recovered, untreated, to the cooling tower as makeup.

Air Inlet Fogger System

The inlet air fogger system will generate clean wastewaters from its mist elimination drains. These drains will be recovered, untreated, for use as makeup water to the mobile demineralizer system. Alternatively, these drains could also be recovered as cooling tower makeup.

Intercooler Condensate

Condensate will be generated by the intercooler units from the moisture present in the ambient air. This condensate stream will be recovered, untreated, as cooling tower makeup.

Cooling Tower Blowdown Treatment

The ZLD system will be used to treat the cooling tower blowdown and recover approximately 99 percent of the treated blowdown for uses within the plant. The balance of the blowdown waste stream (approximately 1 percent of the blowdown) will be contained with the solids that are ultimately disposed offsite.

The ZLD system consists of a Wastewater Collection Tank, a microfiltration (MF) membrane-based softening system, a reverse osmosis (RO) system, and a crystallizer system.

Blowdown will first be processed in the MF system to remove particulate material, calcium, and silica. The MF system will use various chemical feeds to accomplish removal of these constituents. Sulfuric acid will be used for pH adjustment in the first stage reaction tank along with possible use of ferric chloride addition as a coagulant and sodium hypochlorite addition to inhibit biofilm formation. The second stage reaction tank will use additions of sodium hydroxide, sodium carbonate, and magnesium sulfate to affect the precipitation of calcium (as calcium carbonate) and silica (adsorbed onto magnesium hydroxide precipitate). The accumulated solids will be concentrated by the MF membranes and directed as a slurry-type waste stream to a dewatering system. The dewatering system will consist of a thickener (with addition of a polymeric-based thickening aid) and a plate-and-frame type filter press. Decant liquid from the thickener will be recovered to the feed of the MF membrane portion of the system, as is filtrate from the filter press. The filter press will produce a dry cake consisting of at least 25 percent dry solids. These solids will be collected and disposed off site as a nonhazardous material at a landfill or at any other suitable facility.

Filtrate from the MF system will then be treated to be suitable as feedwater to the RO system. These treatments include adding of sulfuric acid and a proprietary polymeric antiscalant to inhibit scaling and precipitation in the RO system, and if needed, adding of sodium bisulfite to remove any residual chlorine that may be present. The RO system will produce purified product water with approximately 98 percent of the total dissolved solids removed. This purified water will be recovered as cooling tower makeup. The majority (approximately 83 percent) of the reject stream from the RO will be recycled to the feed of the MF system, while a small portion of the stream will be directed to the crystallizer system.

The crystallizer system will concentrate this waste stream (the small portion of the RO reject) to a slurry containing approximately 30 percent dissolved and suspended solids. The distillate from the crystallizer will be recovered as makeup to the mobile demineralizer system. The crystallizer slurry will be sent to a centrifuge to further concentrate it to approximately 90 percent dry solids. The filtrate from the

centrifuge will be recycled to the crystallizer feed, while the solids will be collected and disposed off site as a nonhazardous material at a landfill or at any other suitable facility.

The membrane-based systems (the MF and the RO) will require periodic chemical cleaning to remove foulants from the membrane surfaces. These spent cleaning solutions will be disposed by one of the following methods:

- Collection and return to the feed of the MF system (on a metered basis)
- Collection and feed to the crystallizer system
- Collection and transport off site for disposal at a suitable facility.

Periodic purging (draining) of the crystallizer may be required to maintain operating chemistry, specifically nitrate levels. This purge volume may be as high as 3 percent of the feed rate (approximately 0.6 gpm at the summer average condition). The final purge rate would be determined by simulation tests prior to plant startup. The purge volume may then be disposed via either (1) collection and offsite disposal at a suitable treatment facility or (2) via increasing the water content of the solid waste (to approximately 80 to 85 percent dry solids from the anticipated 90 percent dry solids) generated from the centrifuge. A combination of these methods could also be used.

Domestic/Sanitary Wastewater

The domestic waste system will collect discharge from sinks, toilets, and other sanitary facilities and discharge to the plant's sanitary sewer collection system. The sanitary system will include gravity drainage piping, manholes, and lift stations as required. The system will discharge to an onsite septic system located at the southeast corner of the project site. The septic system area is shown on Figure 2.4-1 and described further in Section 2.5.12 below.

Stormwater Drainage

Pre-development runoff from the proposed project site consists primarily of sheet flow. The runoff flows generally from the northwest to the southeast towards Powerline Road, which runs in an east-west direction along the southern boundary of the project site. Once the runoff reaches Powerline Road, it collects in a swale located on the north side of the road and flows toward the east. Additionally, an existing drainage path along the west side of the site flows in a southeasterly direction. This drainage path appears to carry flow only during severe rain events, and it too discharges to the swale along the north side of Powerline Road. During large runoff events, flow from the drainage path passes over Powerline Road because there are no drainage structures along the road.

The post-development drainage plan will maintain the existing pre-development flow patterns at the site. Runoff from the site will be routed to a retention basin, which is designed to retain runoff from the worst-case 100-year event (3 hour).

Upland runoff from undisturbed areas northwest of the proposed plant site will be collected in diversion ditches, which are located along the northern edge of the power plant site boundary. These diversion ditches will discharge to ditches or the existing drainage path along the east and west edges of the plant site. Details of the stormwater management system are discussed in Section 2.5.10.

Oil leakage from equipment is expected to be minimal. Nonetheless, all equipment that has potential for leakage of oil or hazardous chemicals, such as glycol coolants, will be located within spill containment areas.

Stormwater from areas that could collect only nonmiscible oil is directed to passive oil/water interceptors consisting of sumps divided into clear effluent chambers and oil containment chambers. Water from the

clear effluent chambers of these separators will be discharged to the retention basin located at the south portion of the site. The oil from the oil containment chambers will be collected and shipped off site for disposal or recycling.

Drainage from areas that collect miscible chemicals or volatile liquids will be directed to the process drain system, as described above in Section 2.4.4.4.1.

The retention basin and interceptors will be sized in conformance with the standards of the Regional California Water Quality Control Board (RWQCB), the federal Clean Water Act (CWA), and Riverside County.

Table 2.4-8 lists the chemicals to be used for water and wastewater treatment. The system is designed for continuous monitoring of control parameters and specified quantities for optimum operations. Definitive equipment selection will be based on actual water quality analyses.

2.4.5 Nonhazardous Waste Management and Disposal

The proposed project will generate a variety of nonhazardous and hazardous wastes during construction and operation. Summaries of waste streams from construction and operation activities are listed in Tables 2.4-9 and 2.4-10, respectively. These include liquids and solids from the wastewater system, kitchen and restroom wastes, waste filters, replaceable parts, rags, and other waste materials and chemicals produced from maintenance activities, equipment fluids, and skimmed oil. These wastes are described further below. Handling of hazardous wastes is discussed in Section 2.4.6.

2.4.5.1 Solid Waste

Construction Waste

Inert solid waste from construction activities may include lumber, excess concrete, metal and glass scrap, and empty nonhazardous containers. Management of these wastes is the responsibility of the construction contractor(s). Typical management practices required for contractor waste management include recycling when possible, proper storage of waste and debris to prevent wind dispersion, and weekly pick-up and disposal of wastes to local Class III landfills. The total amount of solid waste to be generated by construction activities has been estimated to be similar to that generated for normal commercial construction and is not expected to result in a significant impact on public health or cause adverse effects on local landfill capacity. Table 2.4-9 provides an overview of the waste streams anticipated to be generated during the construction phase of the project.

Operations Waste

Inert solid wastes generated at the facility during operation are predominantly office wastes and routine maintenance wastes such as scrap metal, wood, and plastic from surplus and deactivated equipment and parts. Scrap materials such as paper, packing materials, glass, metal, and plastic are segregated and managed for recycling. Nonrecyclable inert wastes are stored in covered trash bins in accordance with local ordinances and picked up by an authorized local trash hauler on a regular basis for transport and disposal in a suitable landfill in the area. Table 2.4-10 provides an overview of the waste streams anticipated for the operations phase of the project.

2.4.5.2 Liquid Wastes

Nonhazardous liquid wastes produced in the facility consist of wastewater system wastes. Skim oil collected from equipment drains and other liquids drained from equipment are generally treated as hazardous due to possible heavy metals content.

2.4.6 Hazardous Material and Hazardous Waste Management and Disposal

Prior to operation, the proposed project will develop and implement a Hazardous Materials Management Program (HMMP), which will include, at a minimum, procedures for:

- Hazardous materials handling, use, and storage
- Emergency response
- Spill control and prevention
- Employee training
- Reporting and record keeping

2.4.6.1 Hazardous Materials

Tables 2.4-8 and 2.4-11 list the chemicals to be used, handled, or stored at the project site. Sulfuric acid is listed in 40 CFR 355 as an extremely hazardous substance and requires special handling (see Section 7.6, Public Health). In addition, 29 percent aqueous ammonia will be stored in two horizontal tanks. Each of the two tanks will have a 12,000-gallon capacity, and will be 8 feet in diameter and 36 feet long. The tanks will be located at the northeast section of the property (Figure 2.4-1). Secondary containment for the ammonia tanks will consist of an underground containment sump (17,014 gallons). The containment area is sized to contain at least 110 percent of the entire contents of one tank. A concrete unloading area is adjacent to the tank and pumps. The ammonia loading and unloading zone will be to the north of the tanks, in an area approximately 32 feet long by 20 feet wide and 1 foot deep. Figure 2.4-7 shows a conceptual diagram of the ammonia tank containment.

The onsite supply of ammonia is expected to last for approximately 10 days during 15 hour-per-day operations, or 6 days during 24 hour-per-day operations. Ammonia is expected to be delivered to the site via SR 62 to the Dillon Road exit, then a left turn onto the project's site access road, and continuing on the internal project road to the northeastern section of the site.

The storage, use, and handling of these hazardous materials will be in accordance with applicable laws, ordinances, regulations, and standards (LORS), as follows:

- A facility HMMP will be developed and implemented prior to turnover of site management from the construction contractor to the operating company.

- Facility personnel will be trained in hazardous materials and hazardous waste awareness, handling, and management, as required for their level of responsibility.

- Bulk chemicals will be stored in aboveground storage tanks; all other chemicals will be stored in the original shipping container.

- Chemical storage areas and feed/transfer areas will have secondary containment sufficient in size to contain the volume of the largest storage container or tank, including an allowance for rainwater, if appropriate.

- Small-quantity chemicals used for maintenance tasks will be kept in appropriate flammable material or corrosive material storage lockers.

- Periodic inspections will ensure that all containers are secure and properly marked.

2.4.6.2 Hazardous Wastes

Table 2.4.10 lists the types of waste to be generated during operation of the project. These wastes will be managed in accordance with applicable LORS and the proposed project's HMMP, including:

- The proposed project will secure a U.S. EPA Hazardous Waste Generator Identification Number prior to turnover of site management from the construction contractor to the operating company.
- All hazardous waste will be stored in appropriately labeled bulk storage containers. Liquid waste will be stored in labeled 55-gallon drums equipped with secondary containment and closed-tops with bungs. Solid waste will be stored in secured drums.
- All waste drums will be stored in accordance with good practice and applicable regulations, and will be protected from environmental conditions (rain, wind, direct heat) and physical hazards such as vehicle traffic and other sources of heat and impact.
- Storage of hazardous waste will at no time exceed 90 days from the date of initial accumulation, with a total of 55 gallons of hazardous waste or more on site.
- All used or skimmed oils will be managed for recycling.
- California-authorized hazardous waste haulers will transport hazardous wastes to registered waste treatment, storage, disposal, and recycling facilities.
- Hazardous waste generation, handling, and storage areas will be inspected and monitored on a regular basis.
- Emergency response and reporting will be performed per written procedures that follow government and industry requirements and standards.

2.4.7 Emissions Control and Monitoring Equipment

BACT will be incorporated in the design of proposed project emissions control and monitoring facilities. Continuous Emissions Monitoring System (CEMS) equipment will record NO_X and CO emissions and alert operators of deviations from design levels. The following subsections describe the emissions control system. Emissions data, emissions impacts, and applicable regulations are addressed in Section 7.1 and Appendix I.

2.4.7.1 NO_X Emissions

NO_X is produced when oxygen and nitrogen come together at high temperatures. In the typical combustion process, the temperature distribution is erratic. NO_X production is greatest where the highest temperatures exist. Water injection and selective catalytic reduction (SCR) is used to control NO_X emissions.

The exhaust gases of the GE LMS100 CTGs with water injection will contain 25 parts per million volumetric dry (ppmvd) NO_X at 15 percent O_2, when operating at full load. The proposed BACT is the use of SCR to achieve an emission rate of 2.5 ppm NO_X at 15 percent oxygen (O_2).

2.4.7.2 CO and VOC Emissions

CO forms when hydrocarbons are burned in an oxygen-deficient or low-temperature atmosphere. The proposed BACT is the use of oxidation catalyst to achieve an emission rate of 6.0 ppm CO at 15 percent O_2.

Volatile organic compounds (VOC) include all unburned hydrocarbons except methane and ethane. They remain in the exhaust when part of the incoming fuel does not have sufficient contact with oxygen to support full combustion. For these CTGs, VOC emissions are low due to proper CTG combustion controls and the use of natural gas as the single fuel. The proposed BACT is the use of oxidation catalyst to achieve an emission rate of 2.0 ppm VOC at 15 percent O_2.

2.4.7.3 Particulates and SO_x Emissions

Particulate and sulfur emissions are minimized through selection of natural gas as the exclusive fuel. Combustion of natural gas produces minimal particulate and sulfur emissions compared to other fuels.

Inlet air filtration removes particulate matter present in the air, thus preventing it from entering and being exhausted by the turbine.

Particulate emission from the cooling towers will be minimized through the use of high-efficiency (0.0005 percent) drift eliminators.

2.4.7.4 Emission Monitoring

A CEMS will be installed at the stack of each CTG. The system samples, analyzes, and records the concentrations of CO, NO_x, and O_2 in the flue gas. The system provides a record of emissions data and transmits alarm signals to the control room when the emissions levels exceed pre-selected limits. The CEMS complies with 40 CFR 60 and 40 CFR 75 requirements.

2.4.8 Fire Protection and Safety Systems

The plant fire protection and safety systems are designed to limit personnel injury, property loss, and plant downtime caused by a fire or other event. The systems are designed in accordance with:

- Federal, state, and local fire codes, occupational health and safety regulations, and other jurisdictional requirements
- California Building Code (CBC)
- National Fire Protection Association (NFPA) standard practices

Table 2.4-12 provides a summary of fire protection system design conditions. The subsections below provide a detailed description of the fire protection and safety systems for the proposed project.

2.4.8.1 Fire Water System

The fire water supply and pumping system provide an adequate quantity of fire-fighting water to yard hydrants, hose stations, and water spray and sprinkler systems. The system is capable of supplying maximum water demand for any automatic sprinkler system, plus water for fire hydrants and hose stations.

The primary source of fire water is the raw/fire water storage tank. A plant fire water loop is provided to reach all parts of the facility. The fire water system has sectionalizing valves to allow a failure in any part

of the system to be isolated. The remainder of the system is then able to function properly. Hydrants and hose houses are placed at appropriate spacing around the plant. The hydrants are located and the hose houses equipped in accordance with NFPA 24 and local fire codes. Fire water monitors are placed where they can reach equipment that may need cooling during a fire. Valves requiring periodic testing are accessible.

Three pumps supply the plant fire water system. A small electric-driven jockey pump ensures that the fire water loop remains pressurized. If the pressure in the fire water loop drops below a specified set point, an electric-driven pump starts automatically. If the pressure in the fire water loop drops below a lower set point, a diesel-engine-driven pump starts automatically. The fire pumps run until manually stopped. Fire pump installation is in accordance with NFPA 20. The design capacity of the plant's fire water system is approximately 2,000 gpm.

2.4.8.2 Fixed Fire Protection Systems

Automatic fire protection systems are provided in the plant control room in accordance with NFPA.

2.4.8.3 Fire Alarm and Detection

The main fire control panel, located in the station control room, annunciates activation of a fire protection/detection system by location zones. The panel is designed to operate on 120-VAC power through the UPS system. The alarm and detection system is designed to comply with NFPA 70 and 72.

Local building fire pull boxes and audible alarms will be provided. Flashing lights are used in addition to audible alarms in high noise areas.

2.4.8.4 Portable Extinguishers

Portable CO_2 and dry chemical extinguishers are located throughout the plant, including switchgear rooms, with size, rating, and spacing in accordance with NFPA 10. Handcart CO_2 extinguishers are provided for the turbine area as needed for specific hazards.

2.4.8.5 Miscellaneous Fire Safety Items

All construction materials used in the plant will be free of asbestos and meet the required fire and smoke rating.

Plant management will coordinate with the local fire marshal and fire department to provide an appropriate orientation to the plant and its operating and emergency procedures for emergency personnel.

2.4.8.6 Safety Fixtures

Safety showers and emergency eyewash stations or bottles are provided at all chemical treatment and storage areas, laboratories, and battery rooms.

Self-contained breathing apparatus sets are available in the control room. First-aid kits are located in work areas around the plant. Fire blankets and evacuation stretchers are located in the Control Building.

2.4.9 Plant Auxiliaries

2.4.9.1 Lighting

Lighting is required for safe and efficient operation in a number of areas:

- Building interior, office, control, and maintenance areas
- Building exterior entrances
- Outdoor equipment platforms and walkways
- Transformer areas
- CTG and stack areas
- Power island perimeter roads
- Parking areas
- Entrance gate
- Cooling tower areas
- Switchyard

To avoid intrusion on sensitive areas, outdoor lighting is shielded and directed downward and towards the interior of the plant. Only safety lighting will be on continuously during the nighttime.

Emergency lighting from DC battery packs is provided in areas of normal personnel traffic to permit safe egress from the area in the event of failure of the normal lighting system. In major control equipment areas and electrical distribution equipment areas, emergency lighting is sufficient to allow equipment operation and to facilitate reestablishment of auxiliary power or to effect a safe and orderly shutdown.

Aviation obstruction lighting is provided as required by the Federal Aviation Administration (FAA).

2.4.9.2 Grounding

The electrical system may experience unit ground potential rise due to ground fault, lightning strike, or switching surge. This constitutes a hazard to site personnel and electrical equipment. A grounding system is installed to allow ground fault currents to dissipate and to minimize ground potential rise.

The station grounding grid consists of bare conductors installed below grade in a grid pattern. Each junction of the grid is bonded together by an exothermal welding process or mechanical connectors.

The grounding grid is designed to have adequate capacity to dissipate heat produced by ground current under the most severe fault conditions. Grid spacing is designed to maintain safe voltage gradients. Ground resistivity testing is performed during detailed design to determine the number of ground rods and the grid spacing necessary to ensure safe step and touch potentials under fault conditions.

Grounding cables connect building structural steel and nonenergized metallic parts of electrical equipment to the grid.

2.4.9.3 Cathodic Protection and Lightning Protection

Cathodic protection may be provided using an impressed current or buried anode system to prevent corrosion of buried carbon steel piping and structures. Protective coatings are applied as primary protection and to minimize cathodic protection current requirements. The requirement for a cathodic protection system is determined during detailed design.

Lightning protection will be furnished for buildings and structures as required to meet NFPA and IEEE standards. Lightning protection for the switchyard will be provided and installed in accordance with IEEE 998.

2.4.9.4 Distributed Control System

A distributed control system (DCS) provides coordinated monitoring and control for the CTGs and balance-of-plant equipment. Plant operation will be controlled from the control console in the plant

control room. Display and input stations will provide indication and control for most DCS functions. Auxiliary control panels will contain chart recorders, backup indicator and control devices, and noncritical auxiliary controls.

The DCS will provide control and monitoring functions for operation of the plant systems and auxiliaries. The CTG control systems will interface with the DCS via a data link and/or hardwired input/output (I/O). CEMS analyzers and data acquisition systems (DAS) interface with the DCS for monitoring and alarming of emissions concentrations in the exhaust gas.

Annunciation is provided primarily through the DCS. Major packaged subsystems, such as water treatment, may have a local alarm system with a single trouble alarm in the control room.

2.4.9.5 Plant Instrument Air System

The plant instrument air system provides compressed dry air for use in instruments and control devices. The system consists of redundant, electric-driven air compressor, two dual-tower air dryers, each with pre-filter and after-filter. A wet air receiver and a dry air receiver, instrument air headers, and distribution piping are also provided.

System capacity is based on the total quantity of air users and the capacity of each user, plus a margin to account for leakage and plant modifications.

2.4.10 Heating, Ventilation, and Air Conditioning

The HVAC systems provide an acceptable environment for personnel comfort and electrical and electronic equipment operation within plant buildings. Air conditioning in the control and administrative areas maintain a suitable environment for plant personnel.

Outside air ventilation systems are provided for buildings where air conditioning is not required. Electric heaters are used for cold weather heating.

Normally occupied plant areas, including toilet areas, are supplied with fresh air in accordance with the UBC, American Society of Heating, Refrigeration, and Air Conditioning Engineers (ASHRAE) Standard 62, and the California Code of Regulations.

2.4.11 Plumbing

Plant plumbing systems are constructed in accordance with the Uniform Plumbing Code and local and state regulations. Potable water will be provided from the Mission Springs Water District local municipal water supply. Potable water will be provided to restrooms and kitchen facilities in the Control Building. Work sinks and drinking water will be provided in the various areas throughout the plant. Safety showers, eyewash stations, and utility hose bibs will be provided at appropriate locations in the plant.

Restrooms, sinks, water coolers, and floor drains will drain to the on site sanitary sewer system.

2.5 FACILITY CIVIL/STRUCTURAL FEATURES

2.5.1 Overview

The proposed project will consist of eight adjacent units and associated auxiliary equipment located outdoors, arranged from north to south. Each unit will consist of one CTG, a unit intercooler, and a two-winding step-up transformer. Common facilities in the complex include operations building, control room, gas compression, water storage and treatment, instrument air, cooling towers, and auxiliary

transformers. Corresponding balance-of-plant (BOP) mechanical and electrical equipment is located adjacent to each power unit.

The CTGs are outdoor units supported on reinforced concrete pedestals and foundations at grade. For operation and maintenance access, platforms are provided adjacent to the equipment.

Individual reinforced concrete pads at grade support the BOP mechanical and electrical equipment. Foundation pilings are used for major equipment and building foundations if required. All equipment has seismic anchoring that meets or exceeds requirements for applicable codes at the proposed project site.

2.5.2 Stacks

Each SCR will have an integral steel stack, which are 90 feet tall each. The stacks include associated appurtenances, such as sampling ports, exterior ladders and side step platforms.

2.5.3 Buildings

The plant buildings will include operations buildings, control room, unit control buildings, gas compression buildings, switchyard control buildings, and a fire water pump module. All buildings will be constructed in accordance with the appropriate edition of CBC and other LORS.

2.5.3.1 Control Room and Electrical Building

The primary operations building will be located east of Unit 4 and house the control room, offices, and an electrical room. The building will be a pre-engineered, steel-framed structure measuring approximately 130 feet long by 70 feet wide by 20 feet eave height. The facility will house the plant control room, offices, kitchenette, electrical room, and toilet facilities. Finished space areas will be heated and air-conditioned. The electrical room and mechanical equipment area(s) will be heated and mechanically ventilated only.

2.5.3.2 Fire Water Pump Module

The fire water pump enclosure will be a preassembled module. The area will be heated and mechanically ventilated only, as required.

2.5.3.3 GE Modular Control Room

The unit control rooms will small pre-engineered metal buildings that will be heated and air conditioned as required.

2.5.3.4 Switchyard Control Building

The switchyard control buildings will be located in the plant 220-kV switchyard and house control, relay, battery, and telecommunications. Each building will be a pre-engineered, steel-frame structure measuring approximately 60 feet long by 25 feet wide with an eave height of 16 feet. Each building will be heated and air-conditioned.

2.5.3.5 Gas Compression Building

The gas compression buildings will be pre-engineered, steel frame structures measuring approximately 60 feet wide by 20 feet eave height. One will be 120 feet long and the other will be 90 feet long. The siding and roofing will be sound-attenuated, as required, to meet the plant noise criteria. This area will be provided with gas monitoring and will be mechanically ventilated.

2.5.4 Cooling Tower

The cooling towers will be supported on reinforced concrete foundations. Perimeter walls will be included to form the basin structures.

2.5.5 Transformer Foundations and Fire Walls

Transformers will be supported on reinforced concrete mat foundations with pedestals. Spill containment for all oil-filled transformers will be provided by a curbed area or pit with a common corner retention sump; all will be sized at 110 percent of the oil volume for the worst catastrophic failure of a single oil-filled transformer. Fire walls will also be provided between oil-filled transformers and adjacent structures and equipment, in addition to deluge fire protection where recommended by NFPA.

2.5.6 Chemical Storage Areas

Bulk chemical storage tanks in the water treatment areas will be located within concrete diked spill containment areas sized to contain at least 110 percent of the entire contents of the largest tank. A concrete unloading area will be adjacent to the tank and pumps. Containment areas will be properly coated to protect the concrete. Tote size storage tanks will use either similar concrete diked areas or will be supplied with integral containment tanks sized for at least 110 percent of the tote volume. The containment area for the aqueous ammonia tanks is described above in Section 2.4.6.1.

A portable storage trailer may be on site for storage of maintenance lube oils, chemicals, paints, and other construction materials, as needed.

2.5.7 Yard Tanks

Yard storage tanks will include the following:

- Two 1.1-million gallon raw water storage tanks
- One 100-gallon diesel tank
- Two 864,000-gallon treated water storage tanks
- Other small wastewater tanks may be added to facilitate collection and reuse of the in-plant water
- Small tanks and drums for storage of water treatment chemicals

The water storage tanks will be vertical, cylindrical, field-erected steel tanks. Each will be supported on a suitable foundation consisting reinforced concrete ring foundation. These tanks will be protected from corrosion with internal and external coatings as required. Tank bottoms will be cathodically protected.

Chemical storage tanks will be shop-fabricated of thermoplastic, reinforced thermoset plastic, or steel, as appropriate for their contents and size. These tanks and portable drums will be provided with appropriate anchors or cradles and placed within spill containment basins.

Tanks, foundations, and piping connections will be designed to appropriate standards for the contents and seismic zone.

2.5.8 Roads

The internal plant road network serving the facility is shown on Figure 2.4-1. The main proposed project internal plant roads and maintenance equipment staging areas will be surfaced with gravel or crushed stone.

An offsite access road will be constructed leading from Dillon Road. This road will be surfaced with gravel during construction and paved with asphalt after construction. The plant entrance from Dillon Road will be constructed to applicable City and County standards. Access is available to Dillon Road from SR 62 via the Dillon Road exit and from I-10 via Indian Avenue and Dillon Road. The turning radius from Dillon Road onto the site access road will require widening of the Dillon Road and the proposed site access road intersection to permit heavy haul access. This widening would occur at the north side of the Dillon Road and site access road intersection, within the 200-foot-wide corridor shown on Figure 2.3-1.

2.5.9 Site Security

An onsite security system will be installed as part of the project. Controlled access will be maintained at entrances to plant secure areas. Entry through the facility's main gate will be remotely controlled from the control room. In the event of an "after-hours emergency," entry into the facility by fire department or emergency units will be handled on a manual override basis, in accordance with a prior arrangement between facility management and appropriate local officials.

2.5.10 Site Grading and Drainage

Pre-construction topography and drainage are shown on Figure 2.5-1. A Draft Stormwater Pollution Prevention Plan for construction is provided in Appendix G. Stormwater management for the proposed project will be provided in accordance with applicable codes and the local standards. Pre-development drainage patterns will be maintained to the extent possible after site development.

Stormwater runoff from offsite areas is diverted around the proposed project site. A retention basin will be provided to collect stormwater runoff from the site. The stormwater collection system will consist of swales, ditches, culverts, drain pipes, and oil/water separators, as necessary, to convey the site runoff to the basin. Stormwater runoff from areas subject to oil contamination will be collected and routed through passive oil-water interceptors before entering the retention basin. The stormwater management collection system is designed to provide storm drainage retention for the incremental runoff, but the retention basin will actually provide retention for the fully developed site for the worst-case 100-year event (3 hour) or as required by the applicable local codes and standards.

An erosion and sediment control plan will also be used at the site during the construction phase to control sediment-laden runoff and ensure the integrity of the stormwater collection system during construction. The plan will use control measures, as necessary, such as stabilized construction entrances, gravel-covered construction laydown area, silt fencing, seeding of the disturbed areas, and sediment basin. Specifically, the runoff from all affected areas will be diverted to the erosion control measures before being discharged off site.

Upon the completion of the project, areas discharging to the stormwater management basin will be checked to confirm stabilization. The accumulated sediment in the oil/water interceptors, if any, will be removed by using access manholes. After sediment removal and stabilization of the site, all construction sediment control measures will be removed.

The site grading plan, including site drainage and retention basin, is shown on Figure 2.5-2.

2.5.11 Site Flood Issues

The Comprehensive General Plan for the City of Desert Hot Springs indicates that the proposed project site is located in an area with minimal potential for flooding, outside the 100- and 500-year floodplains. The site is within Federal Emergency Management Agency (FEMA) Zone C, which is considered an area of minimal flooding.

Because the site is not located within 100- or 500-year floodplains, there would be no impacts associated with 100-year floodplain as a result of the placement of fill or the construction of the power generation facility structures. While the runoff from the 100-year, 24-hour storm increases as a result of the development, the retention basin will mitigate the increase, and the impact on post-development peak discharges downstream of the site would be negligible. Therefore, there would be no increase in the 100-year flood level at the site or downstream of the site as a result of the project development.

Within the actual project site, buildings and equipment will be constructed on foundations set at elevations above potential surface waters, and the overall site-grading scheme is designed to route surface water around and away from all equipment and buildings. The stormwater drainage system is sized to accommodate a 100-year storm event (3 hour) or as required by applicable local codes and standards. Buildings and equipment will be constructed in a manner that provides protection from a 100-year storm event.

2.5.12 Sanitary Sewer System

The plant's sanitary waste will be conveyed via an underground sewer system to an onsite septic system. The system will include a septic tank and leach field. It is expected that an average of 50 gallons per day effluent will flow into the septic tank and out into the leach field. This system will be constructed in conformance with State of California and Riverside County regulations. The septic system, including the leach field, will be located at the southeast corner of the site.

2.5.13 Earthwork

Earthwork will be required to establish the grade for the proposed power plant site. The existing topography of the power plant site is relatively flat, sloping down to the southeast at approximately 5 percent from an elevation of 1,120 feet to an elevation of 1,050 feet. The existing grade is irregular due to the northwest-to-southeast trending low alluvial ridges and shallow drainage channels. The site currently contains low-lying scrub shrub and cactus. The ground surface is also littered with gravel, cobble gravel, and 1-foot-diameter or larger granite boulders.

Grading of the site will include a balanced cut and fill to eliminate need for any export and any nonstructural imported material. In general, cut will be approximately 20 feet on north end of the site and fill will be approximately 20 feet on south end of the site. The raw cut and fill is expected to be approximately 250,000 cubic yards. Final grading in the core power block area will range from 1,095 to 1,075 feet.

2.6 PROJECT CONSTRUCTION

2.6.1 Construction Schedule

The schedule for construction of the proposed project is shown on Figure 2.6-1. Construction will occur over 18 months, from December 2008 to May 2010. Operation of the first five turbine units is planned to begin by March 2010, and the final three units are planned to begin operation in May 2010.

During this schedule, project linears are slated for construction during the following months:

- Site access road will be installed Months 1-2.
- Natural gas line will be installed Months 7-11.
- Wells will be installed Months 7-11.
- Potable water pipeline will be installed Months 7-11.

SCE will construct the transmission line, which is currently expected to be installed during Months 1 through 8. The work for this electrical generating facility will be performed on a design-build basis through Engineering, Procurement, and Construction (EPC) contracts. The work will be executed under one or several agreements entered into by CPV Sentinel. The number and type of agreements and the structures of those agreements will be based on economic analyses and market status at the time of award. Contractors not involved in the main plant typically perform offsite utility engineering and construction. The project owner issues Requests for EPC Proposals (RFPs) to qualified firms. The RFPs are structured to optimize the project owner's control of contract costs and performance. The list of qualified firms to which RFPs are issued includes 100 major EPC firms, engineering companies, construction contractors, and suppliers of major equipment. Bids are evaluated and contracts awarded to achieve timely and cost effective construction of a reliable and efficient generating facility. The form of the EPC agreements is determined after bid proposals are received.

The EPC activities for the proposed project will be accomplished on a fast-track schedule. This method of performance requires construction work to start before all construction plans are completed during the engineering phase. Placing the project on a fast-track schedule gains the benefits of an earlier plant completion without resorting to the expensive sequential execution of EPC activities. Fast-tracking allows the project to begin sooner, promotes efficiencies by staging project engineering decision-making, and permits an earlier start of plant operating revenue. In addition, fast-tracking allows the design and construction of the main plant to progress without requiring final commitment to the details associated with construction of the plant's linear elements. Typically, separate contractors perform offsite work.

Placing the project on a fast-track basis allows engineering and construction to proceed in parallel. With a minimum of lead time, engineering defines major systems and processes, purchases long-lead equipment, and begins issuing drawings to the field for construction. The engineering work and the issuing of construction drawings continue well into the physical construction of the plant. This closely coupled integration of engineering and construction is well proven and is the standard approach used in highly competitive industries.

The fast-track approach also requires that the plans, procedures, and protocols required by the CEC's Conditions of Certification (COC) be submitted before the beginning of incremental construction work, and not before construction as a whole begins.

The EPC schedule for the proposed projects construction phase requires approximately 20 months. The schedule begins when CPV Sentinel issues the Notice to Proceed to the EPC contractor, and is completed when the facility is commercially operational.

Pre-construction activities include all work undertaken prior to construction, including detailed engineering, procurement construction planning, and mobilization. Construction activities include all work on the main site, installation and connection of offsite utilities, pipelines and transmission lines, switchyard, substations, and plant startup. Sequential activities for onsite and offsite work include site preparation; foundation construction; erection of major equipment and structures; installation of piping, electrical systems, and control systems; and startup and testing. Offsite utilities are often constructed on a separate schedule because they involve different contractors than the onsite activities. Fast-track advantages can be realized if onsite and offsite approval processes are segregated. Commercial operations activities occur upon completion of construction and startup.

2.6.2 Engineering and Pre-Construction Mobilization

At the beginning of the proposed project, the EPC contractor or contractors will prepare written plans for project execution. A detailed Project Execution Plan will be prepared early in the project and will contain the Project Master Schedule and descriptions of implementing the fast-track approach to the project and the interface between EPC activities. The detailed operating plans to be included in the Project Execution

Plan are discussed below. Detailed engineering plans are developed in stages, as required, and in accordance with the COC, but well in advance of installations covered by the individual plans.

A project-specific Environmental, Safety, and Health Plan (ESHP) will be developed to specify worker safety procedures and project owner and EPC contractor responsibilities to prevent incidents involving personnel on the project site. The safety section addresses actions, including documentation, that are required during the design, procurement, and construction phases of the work. The environmental section similarly addresses actions necessary to minimize the impact of the work on the surrounding environment.

The EPC contractor develops a project-specific quality assurance/control plan with input from the project owner and major equipment suppliers.

The Project Administration Plan includes a detailed responsibility matrix, specifications, equipment lists and expediting schedules, procurement plans, project control systems, logistics plans, and the Project Execution Programs. The EPC contractor and the project owner's engineer should work closely together during the project to maximize constructability and efficiency, accelerate approvals, and ensure that the project conforms with all permit requirements.

2.6.3 Construction Facilities

Office space for the project owner, project owner's engineer, EPC contractor, and major subcontractor supervisory personnel is located on the work site and has adequate parking space for appropriate personnel. A small number of mobile trailers are used for inspectors and craft supervisors and are located throughout the main site and offsite utility construction areas. Trailers are used to accommodate onsite training of facility operators and administrative personnel during the test and startup phases of construction. Training activities will move to the permanent operations building and the control room when those buildings are available.

2.6.4 Construction Parking

Craft parking during construction at the main site will be located near the power plant. This parking area will be approximately 2 acres. The parking area will not be fenced to maintain access to the operating windmills and power lines.

2.6.5 Laydown and Storage

During construction, reasonable efforts will be made to sequence deliveries of equipment and materials so that equipment and materials laydown, storage, construction equipment parking, small fabrication areas, and office trailers will be onsite. In addition, approximately 14 acres (including the 2 acres for parking identified above) will be used off of the site for a construction laydown area, as shown on Figures 2.3-1 and 2.3-2.

The proposed 14-acre laydown area is an undeveloped area within an existing wind farm. This area is currently used for equipment laydown by the wind farm operator. The proposed project will cover this area in gravel, and the gravel will remain after project construction is complete in order to facilitate continued use of this area for equipment laydown by the wind farm operator.

Layout of access roads and loading areas is important in the development of the laydown yard. Space is required for large turbine parts, structural steel, piping spools, electrical components, switchyard apparatus, and building parts. Parking will be primarily at the south portion of the laydown area, and equipment laydown will occur at the northern portion of the construction laydown (closest to the project site). Sufficient space will be provided to accommodate equipment preventive and in-storage maintenance

activities such as moving, shaft rotation, connecting, lubricating, and heating. Power and other utilities, as required, will be available in this area. An enclosed warehouse space is required. The EPC contractor and subcontractors can use this area to store small tools, electrical panels, instruments, turbine crates, and other items requiring inside storage.

2.6.6 Emergency Facilities

Emergency services will be coordinated with a nearby fire department and hospital. A medical clinic will be contracted to set up nonemergency physician referrals. Fire extinguishers will be provided around the site and in offices and will be regularly inspected and maintained. Safety personnel trained in first aid will be part of the construction staff. A first-aid station will be established near the work area and staffed by an emergency medical team (EMT) or other highly trained medical professional to treat minor injuries and provide advanced injury care.

2.6.7 Construction Utilities

During construction, utilities will be provided for the proposed project site and for laydown and storage areas. Construction power will be supplied initially by generator, and, when available, by a connection to the local distribution system. Area lighting will be provided and strategically located for safety and security.

Construction water will be supplied by the existing onsite well, the future water supply well(s), or by water truck. Drinking water will be distributed daily and refilled as required by the heat and level of consumption. Water usage will increase during the hydrotest of the piping systems. Used hydrotest water will be reused when possible, with final disposal via the oil/water separator. Temporary portable toilets will be provided throughout the site.

2.6.8 Site Services

Site services to be provided include the following:

- Site security
- Construction testing, including nondestructive examination (NDE), electrical testing of both low-voltage and high-voltage equipment, and testing of concrete and soil
- Furnishing and servicing of sanitary facilities
- Solid waste collection and disposal
- Disposal of hazardous materials and waste in accordance with local, state, and federal regulations

2.6.9 Construction Equipment and Materials Delivery

Construction equipment and materials are listed in Table 2.6-1. Deliveries expected during construction are listed in Table 2.6-2.

Truck deliveries of equipment and materials will occur only during daylight hours, as a general rule, although it may occasionally be necessary to off-load transport equipment and materials to the site on the weekend or evenings. The estimated average daily frequency of truck deliveries is shown in Table 2.6-2. Materials such as pipe, wire and cable, fuels, reinforcing steel, and small tools and consumables will be delivered to the site laydown area or the warehouse by over-the-road truck. The heavy equipment items will be transported to the site by truck.

Site access will be controlled for personnel and vehicles. A security fence will be installed around the plant site boundary, including the laydown area.

After construction is completed, local access roads will be resurfaced as necessary and appropriate.

2.6.10 Construction Staffing and Hours

Construction staffing by trade is provided in Table 2.6-3. Construction staffing by project activity is shown on Figure 2.6-2. The maximum number of construction staff over the 18-month construction schedule is 371 (in Month 6). These numbers include staff requirements for construction of the power plant and project linears (i.e., site access road, gas line, potable water line, and transmission line).

Construction is expected to occur 12 hours per day, 7 days per week. The Riverside County Ordinance 457.90 allows construction from 6 a.m. to 6 p.m. from June through September and 7 a.m. to 6 p.m. from October through May. Exceptions to these standards are allowed with written consent of the building official. Therefore, CPV Sentinel will request approval from the Riverside County Transportation and Land Agency to construct during the hours of 6 a.m. to 7 a.m. during October through May.

2.6.11 Summary of Temporary Disturbance Areas

The project will disturb approximately 85 acres of land during construction. Of this, 24.5 acres will be returned to pre-project conditions after construction is complete. Table 2.6-4 identifies estimated disturbed areas from construction, including construction right-of-ways for the project's linear features.

2.7 FACILITY OPERATIONS

2.7.1 Operations Schedule

The proposed project is anticipated to have an operating life of 30 years. Reliability and availability projections are based on this projected operating life.

The proposed project is a generating facility designed for the restructured California energy market. Simple cycle operations are proposed to respond to California's need for capacity, energy, and ancillary services. The plant design and operating philosophy will be based on operation with a high emphasis on efficiency and flexibility.

The facility will be capable of operation 24 hours per day, 7 days per week. However, it is anticipated that operations of five of the eight units will not exceed 2,805 hours per year, while three of the eight units are not anticipated to operate more than 3,406 hours, given the permit limits. The facility is expected to operate during the hottest hours of the summer when demand for electricity is the highest.

When possible, planned maintenance outages will be scheduled during times of the year that typically experience the lowest electricity demand. Plant operations will be controlled from the operator's panel, which will be located in the control room. A distributed control and information system will provide control, monitoring, and indication for plant functions, including startup, shutdown, load holding and following, and emergency annunciation and override.

2.7.1.1 Plant Operation

The California electricity market was deregulated on April 1, 1998. Since that date, independent power producers (IPPs) such as CPV Sentinel are free to sell their electricity on a merchant basis. CPV Sentinel has a power purchase agreement with SCE for five of the units, and anticipates securing an agreement for the remaining three units. Generating capacity that has not been sold through contracts will be available for sale on the spot market. Operation of the proposed project therefore depends on the quantity of electricity sold through contracts and the ability to sell into the spot market.

Electricity demand and availability fluctuate greatly depending on the weather and other factors. It is anticipated that the facility will operate at 100 percent load when dispatched during peak energy demand. At certain times, the facility may be operated in load following mode, where the output of a given unit would be adjusted, either by schedule or automatic generation control, to meet load pursuant to schedules from the power purchaser or as necessary by CAISO. When on-line and synchronized, the units may be called upon to provide spinning reserves or regulation service. Each turbine will be equipped with automatic generating control (AGC), which will allow each turbine to respond to remote dispatch control signals on a second by second basis.

At certain times of the day, week, or year, the sum of the contractual load and spot market sales and demand could drop to a level where it would be economically favorable to shut down one or more CTGs. This mode of operation could occur during late evening and early morning hours, and weekends, when contractual load could decrease and/or market sales would not be economically viable. When the units are not undergoing maintenance, they will be available to provide nonspinning ancillary services.

2.7.1.2 Daily and Seasonal Variation in Temperature and Demand

Peak electricity demand periods in California correspond to high air conditioning use on summer afternoons when ambient temperatures are high. At the same time, available generating capacity is decreased because the high temperatures decrease airflow into combustion turbines and decrease cooling tower effectiveness for steam turbines. High temperatures also decrease transmission system capacity.

To economically maximize output on hot days, an inlet air cooling system will be installed on each CTG. The inlet cooling system will increase the power and efficiency of the facility.

When responding to demand, the facility will start from zero baseline, up to full load. The gas turbines can respond concurrently (in parallel) or sequentially (by cascading units).

2.7.1.3 Startup and Shutdown

The time required to start an LMS100 is nominally 10 minutes to full load, with approximately 15 additional minutes to warmup the SCR to achieve optimal emissions reduction. The oxidation catalyst is expected to be at rated emissions reduction by the end of the 10-minute combustion turbine start period. It is anticipated that between 300 and 350 starts and stops per combustion turbine will occur annually.

2.7.1.4 Control Philosophy

The control system will consist of a state-of-the-art, integrated microprocessor-based distributive control and system (DCS). The control system will provide automation for startup, shutdown, and control of plant operation limits, and will provide protection for the equipment.

Interlock and logic systems will be provided via hardwired relays, the DCS, or programmable controllers. Process switches (i.e., pressure, temperature, level, etc.) used for protective functions will be connected directly to the DCS and/or the protective system.

2.7.1.5 Degree of Automation

The proposed project plant will be designed with a high degree of automation to reduce the number of procedures requiring intervention by operating personnel. Where it is not beneficial, systems will not be automated. Use of subsystem automation and a distributed control system will reduce the number of individual control switches and indicators, and the complexity and size of the main control room consoles and panels that the operator will need to use. This modern, ergonomically based control room design will

improve plant safety, reliability, and efficiency by simplifying operator actions and reducing opportunities for confusion when rapid response is needed.

2.7.1.6 Centralized Control

The majority of control consoles and input devices required to support the operation of the plant will be located in the control room. The control room will contain the DCS control consoles and the auxiliary control panels. In addition, the control room will contain the alarm, utility, and log printers. Local control panels or stations will be furnished only where required to set up a system for operation, or where the equipment requires infrequent and nonurgent attention during plant operation. Main control room indication and control will only be duplicated for those variables critical to plant availability.

2.7.1.7 Distributive Control and Monitoring System

The DCS will provide modulating control, digital control, monitoring, and indicating functions for the plant power block systems. The following functions will be provided:

- Controlling the CTGs (via data link to the CTG-furnished control system) and other systems in a coordinated manner
- Controlling the BOP systems in response to plant demands
- Monitoring controlled plant equipment and controlled process parameters and providing this information to the plant operators
- Controlling displays (printed logs, CRTs for signals generated within the system, or received from I/O points)
- Consolidating plant process status information through displays presented in a timely and meaningful manner
- Automatically alarming out-of-limit parameters or parameter trends, displayed on the alarm CRT(s), and recorded on the alarm log printer
- Storing and retrieving historical data storage and retrieval

The DCS will be a redundant microprocessor-based system, and will consist of the following major components:

- CRT-based operator consoles
- Engineer work station
- Distributed processing units
- Input/output cabinets
- Historical data unit
- Printers
- Data links to the combustion turbine generator

The DCS will have functionally distributed architecture made up of a group of similar redundant processing units linked to a group of operator consoles and the engineer workstation by redundant data highways. Each processor will be programmed to perform specific, dedicated tasks for control information, data acquisition, annunciation, and historical purposes. By being redundant, no single point failure can cause a unit trip.

The DCS will be data-linked to the control systems furnished by the CT supplier to provide remote (onsite) control capabilities, as well as data acquisition, annunciation, and historical storage of turbine and generator operating information.

The system will be designed with sufficient redundancy to preclude a single device failure from significantly impacting overall plant control and operations. This also allows critical control and safety systems to have redundancy of controls, as well as an interruptible power source.

2.7.2 Operations Staffing

The proposed project is expected to be operated by approximately 10 full-time employees and 4 part-time staff. Table 2.6-5 lists facility personnel during operations. CPV Sentinel will sign an operations and maintenance agreement with a third party operations and maintenance (O&M) provider. The third party O&M provider will be responsible for hiring full-time and part-time employees.

2.7.3 Operations Deliveries and Pick-Ups

Maintenance chemicals delivered to the proposed project site would include lubricating oils and cleaning chemicals. Nonhazardous and hazardous wastes would be picked up from the site for offsite disposal. Table 2.6-6 lists expected deliveries and pick-ups during operations. Aqueous ammonia is expected to be delivered eight times per month on average.

2.8 TRANSMISSION LINES DESCRIPTION, DESIGN AND OPERATION

A new 3,250-foot-long transmission line will be constructed from the CPVS switchyard to Devers substation. SCE will prepare the final design documents, build, own, and operate the transmission interconnection facilities. The 220-kV single circuit will be designed and constructed in accordance with General Order 95 (GO-95), “Rules for Overhead Line Construction” and other applicable state and local codes. Land use activities within and adjacent to the transmission line right-of-way will be permitted within the terms of the easement. Transmission line structures, access ways, and the right-of-way will be inspected on a routine, periodic basis. Emergency repairs will be made if the transmission line is damaged and requires immediate attention.

Transmission facilities are further discussed in Chapter 4.

2.9 SAFETY, AVAILABILITY, AND RELIABILITY

2.9.1 Safety Precautions and Emergency Systems

Safety precautions and emergency systems will be implemented as part of the design and construction of the CPVS plant to ensure safe and reliable operation of project facilities. Administrative controls will include classroom and hands-on training in operating and maintenance procedures and general safety items, and a well-planned maintenance program. These will work with the system design and monitoring features to enhance safety and reliability.

Safety, auxiliary, and emergency systems will consist of lighting, grounding, DC backup for controls, fire and hazardous materials safety systems, security systems, and natural gas, steam, and chemical safety systems. The plant will include its own utilities and services such as emergency power, plant and instrument air, fire suppression, and potable water systems.

2.9.1.1 Safety Precautions

Worker Safety

The proposed project will implement programs to ensure that compliance with federal and state occupational safety and health program requirements is maintained. In addition to compliance with these programs, the proposed project will identify and implement plant-specific programs that effectively assess potential hazards and mitigate them on a routine basis.

A more detailed discussion of worker safety is provided in Section 7.7.

Hazardous Materials Handling

Hazardous materials will be stored and used at the proposed project site during both construction and operation. Design and construction of hazardous materials storage and dispensing systems will be in accordance with applicable codes, regulations, and standards. Hazardous materials storage areas will be curbed or diked to contain spills or leaks.

Potential hazards that are associated with hazardous materials will be further mitigated by implementing a hazards communication (HAZCOM) program. This program involves thorough training of employees on proper identification, handling and emergency response to spills or accidental releases.

Emergency eyewashes and showers will be provided at appropriate locations. Appropriate personal protective equipment (PPE) will be provided during both construction and operation of the facility. A more detailed discussion of hazardous materials handling is presented in Section 7.7.

Security

The CPVS plant site will be enclosed by a security fence. Access gates will be provided, as required. In addition to the perimeter security fence, the substation and transformer area will be fenced and provided with access gates. Security will be maintained continuously with either surveillance devices or personnel.

Public Health and Safety

The programs implemented to protect worker health and safety will also benefit public health and safety. Facility design will include controls and monitoring systems to minimize the potential for upset conditions that could result in public exposure to acutely hazardous materials. Potential public health impacts associated with operation of the project will be mitigated by development and implementation of an emergency response plan (ERP), a HAZCOM program, a spill prevention and control plan (SPCP), safety programs, and employee training.

CPV Sentinel will coordinate with local emergency responders, provide them with copies of the plant site ERP, conduct plant site tours to point out the location of hazardous materials and safety equipment, and encourage these providers to participate in annual emergency response drills.

2.9.1.2 Emergency Systems

Fire Protection Systems

The proposed project will have onsite fire protection systems and will be supported by local fire protection services. Section 2.4.8 includes a detailed description of the fire protection systems.

Portable and fixed fire suppression equipment and systems will be included in the project. Portable fire extinguishers will be located at strategic locations throughout the project site. Smoke detectors, sprinkler systems, and fire hydrants with hoses will be used. Based on detailed design, the fixed fire protection system may also include a carbon dioxide or a deluge spray system.

Employees will be given fire safety training including instruction in fire prevention, the use of portable fire extinguishers and hose stations, and reporting fires to the local fire department. Employees will only suppress fires that are in an incipient stage. Fire drills will be conducted at least twice each year for each work area.

The Palm Spring Fire Department Station #443, located at 570 East Racquet Club Road, approximately 6.2 miles southeast of the site, will provide primary fire protection, firefighting, and emergency response services to the proposed project site. The Palm Springs Fire Department will perform a final fire safety inspection upon completion of construction, and thereafter will conduct periodic fire safety inspections. Prior to startup, the Fire Department will be requested to visit the project site to become familiar with the site and with its project emergency response procedures.

Medical Services and Emergency Response

The proposed project will have an ERP that will address potential emergencies, including chemical releases, fires, and injuries, and will describe emergency response equipment and its location, evacuation routes, procedures for reporting to local emergency response agencies, responsibilities for emergency response, and other actions to be taken in the event of an emergency.

Employee response to an emergency will be limited to an immediate response to minimize the risk of escalation of the accident or injury. Employees will be trained to respond to fires, spills, earthquakes, and injuries. A first-aid facility with adequate first-aid supplies and personnel qualified in first-aid treatment will be provided on site.

2.9.2 Aviation Safety – Power Generation Stacks

FAA Regulations, Part 77, establish standards for determining obstructions in navigation space and sets forth requirements for notification of proposed construction. These regulations require notifying the FAA of any construction more than 200 feet in height above ground level. The closest airfield with regularly scheduled commercial flights is Palm Springs, approximately 10 miles away.

The planned exhaust stacks will be 90 feet aboveground and the transmission poles will be up to 115 feet tall. A Notice of Construction or Alteration will not need to be filed with the FAA. The stacks will be marked with emergency lighting as required by FAA rules. Local conditions, such as crop dusting operations, will be reviewed to determine the need for other aviation safety markings.

2.9.3 Facility Availability

Given the emissions-based permit limits discussed in Section 7.1, the proposed project is expected to have an annual capacity factor of no more than 35 percent. It will be possible for the plants availability to approach 100 percent over a 1 month period.

The project will employ aeroderivative-based gas turbines fueled by natural gas. In the past few years, gas turbines with natural gas firing have proven to provide much higher availability than other types of power plants of comparable size. Generating plants with aeroderivative gas turbines operating in continuous service have commonly demonstrated operating availability well above 95 percent over several years. Based on the limited annual operations, periodic scheduled maintenance is not anticipated to affect availability.

2.9.3.1 Degradation in Output from Fouling and Wear

All gas turbines degrade in output from their new and clean condition because of fouling and wear. “Nonrecoverable” degradation from equipment wear increases rapidly in the first few thousand fired hours and then slows. Virtually all of the degradation due to wear can be recovered during the major overhaul conducted at the manufacturer’s recommended interval. Degradation due to fouling is corrected by frequent online and less frequent offline water washing.

2.9.3.2 Summary of Availability

The proposed project is expected to provide a high level of availability and be more responsive than most generation facilities to the needs of the system for power during periods of peak load, and particularly in periods of high ambient temperature. Its outage rates are expected to be low. Planned outages will be taken in the winter, spring, and fall, and almost all other outages will occur during off-peak periods.

2.9.4 Equipment Redundancy

The following subsections identify equipment redundancy as it applies to project availability.

2.9.4.1 Combustion Turbine

The CTG subsystems include the combustion turbine, inlet air cooling system, lube oil system, starting system, generator and excitation systems, and combustion turbine control and instrumentation. Redundancy is provided in combustion turbine subsystems where practical. For example, the lube oil system consists of redundant pumps, filters, and coolers. The microprocessor-based control system consists of redundant microprocessors, as well as redundant sensors for critical measurements. Technology advancements, as well as redundancy as illustrated above, have led to extremely high reliability for the combustion turbines considered for this project.

2.9.4.2 Distributed Control and Information System

The DCS will be a redundant microprocessor-based system that will provide control, monitoring, and alarm functions for plant systems and equipment. The following functions will be provided:

- Control room operator interface
- Monitoring of plant equipment and process parameters and provision of this information to the plant operators in a meaningful format
- Usual and audible alarms for abnormal events based on field signals or software-generated signals from plant systems, processes, or equipment
- Functionally distributed architecture comprised of a group of similar redundant processing units linked to a group of operator consoles and an engineering workstation by redundant data highways. Redundant processors will be identically programmed to perform the specific tasks for control information, data acquisition, annunciation, and historical purposes. Because of this redundancy, no single processor failure can cause or prevent a unit trip. Experience with similar systems has been that the likelihood is extremely low of simultaneous malfunctions of two or more processors between the DCS and the controlled equipment.

2.9.5 Power Plant Performance and Efficiency

The proposed project will consist of eight GE Model LMS100 CTGs, each with gross output of more than 100 MW based upon the range of ambient conditions for the project area. Each CTG will be equipped to burn natural gas with an evaporative-based inlet air cooling system installed to increase power output at elevated ambient temperatures.

2.9.5.1 Performance and Efficiency Overview

Table 2.9-1 provides a summary of the plant performance estimates for the scenarios described and based on typical summer condition (90ºF ambient).

2.9.6 Fuel Availability

The total natural gas resource base for the lower 48 states is estimated to be about 975 trillion cubic feet (Tcf). The gas resource base includes proven gas reserves and other potential gas supplies that can be recovered with current technology. The five major gas supply regions in the United States that supply California, are accessible by the Southern California Gas Company's gas dual 30 transmission lines (Line Nos. 2000 and 2001), and to which the proposed project will interconnect for gas supply, are the Rocky Mountains, the San Juan Basin, the Permian Basin, the Pacific Northwest, and in-state California. The aggregate natural gas resource base from these regions is 371.67 Tcf. The proven gas reserves for the same five supply regions total 52.76 Tcf. Proven gas reserves are economic gas supplies that are attached to existing gas transportation infrastructure; essentially, these are reserves that can be produced today and are "behind pipe." The total natural gas resource base for Canada is estimated to be about 419 Tcf. The Canadian gas supply regions that can economically supply California are Alberta, British Columbia, Saskatchewan, and Northern Canada (Northwest Territories). The aggregate natural gas resource base from these regions is 400.72 Tcf. The proven gas reserves for the same five supply regions total 79.43 Tcf. The proposed project is anticipated to consume 0.06 Tcf of natural gas over a 3-year period; however, projecting this out over a 30-year period the consumption would be 0.63 Tcf.

2.9.7 Water Availability

Water for power plant operations will be provided by the Mission Springs Water District (MSWD). Reclaimed water will be supplied by the MSWD Horton Wastewater Treatment Plant (WWTP), located approximately 5 miles from the proposed project site (Figure 1.1-1). Wastewater from the Horton WWTP will be treated to the tertiary level by a newly constructed tertiary treatment system funded by MSWD. The reclaimed water will be sent to existing percolation ponds located adjacent to the Horton WWTP, where it will percolate into the underlying Coachella Valley Groundwater Basin and be banked for later use by the proposed project. The Horton WWTP will supply, on average, 1,500 afy of reclaimed water. Of this, the proposed project's operations are expected to use up to 1,100 afy. The proposed project will access its banked water supply via onsite wells which overlie the same Coachella Valley Groundwater Basin. The project will also include installing a potable water line extension from a current municipal water line existing along Dillon Road.

Water supply is discussed in further detail in Chapter 6.

2.9.8 Project Quality and Control

This section summarizes the quality program that will be applied to the proposed project. The objective of the quality program will be to maximize confidence that systems and components will be designed, fabricated, stored, transported, installed, and tested in accordance with the technical codes and standards appropriate for a power plant.

2.9.8.1 Quality Assurance

The project quality program activities will generally be divided into the following stages:

- Conceptual Engineering – Typical activities include technical screening studies, preliminary evaluation of permitting requirements, developing plant cycle design criteria, estimating plant performance, defining site-specific characteristics, and estimating the

plant capital costs to support economic studies. The owner's engineer performs this work.

- Detailed Design – Typical activities include preparing specifications, drawings, lists and other technical data needed to describe, illustrate, or define systems, structures, or component of the plant. This work will be performed by a firm duly qualified and licensed in the State of California. Firms will be selected through a competitive procurement process administered by the owner. It is anticipated that multiple contracts will be required to support design and construction of the plant and its associated linear facilities. The owner's engineer will remain active during the project to review document packages and an execution approach for conformance with CEC's Certificate of Compliance requirements and the conceptual design.

- Procurement Specification Preparation – Work includes preparing and issuing formal, documented packages for suppliers of equipment, material, or services. The specifications will be reviewed by the owner's engineer prior to issuance for compliance with the project's technical and commercial requirements. The supplier's proposals will be formally evaluated against the package before a purchase order or contract is awarded.

- Supplier's Control and Surveillance – Typical activities are those that the suppliers perform as required by their purchase order. These activities ensure that the products or services to be provided conform to the requirements of the purchase order or contract.

- Supplier Data Review – These activities, to be performed by the contractor who issues the purchase order, include reviewing selected supplier drawings, data, instruction, procedures, plans, and other documents to monitor conformance to the requirements of the purchase order or contract. Visits to supplier shops will be conducted as appropriate, as will visits by the owner and/or the owner's engineer when required.

- Shipping and Receipt Inspections – These activities are the responsibility of the contractor and will generally be performed during construction. They include inspection and review of products during manufacture and/or at the time of shipment and delivery to the construction site. The owner's engineer will perform surveillance of this process.

- Construction/Installation – These activities include inspecting and reviewing the construction storage, equipment, and component installation, cleaning and initial testing of systems and components at the plant site. The owner's engineer will perform reviews and checks of the quality of work being installed and the systems and procedures used by the EPC contractor to monitor the work being installed.

- System/Component/Plant Testing – These activities will be performed by the EPC contractor and witnessed by the owner's engineer. This ensures that the plant is first tested, then commissioned and started up in a documented and controlled manner. This is done to confirm system safety, and that the performance of systems and components conforms to the technical requirements and all guarantees. All such work is to be documented in detail.

2.9.8.2 Quality Control Records

The following quality control records will be maintained, at a minimum, for review and reference:

- Approved environmental permits
- Required building permits

- Project procedures and instruction manual
- Design calculations and equipment specifications
- Project design basis and criteria
- Quality assurance audit reports
- Piping and instrument diagrams
- One-line and three-line diagrams
- Conformance to construction record drawings
- Procurement specifications (contract issuance and charge orders)
- Purchase orders and charge orders
- Contractor/supplier's quality assurance and quality control records

For equipment purchase orders or services contracts, the EPC contractors will prepare a list of qualified suppliers and subcontractors. Before a purchase order or contract is awarded, contractors will evaluate supplier/subcontractor track record, financial condition, personnel capability, past project performance and quality program. The evaluation may also include a survey of the supplier's facilities.

The contractor will be responsible for providing documentation of all work performed in accordance with the quality requirements specified in the contract between the owner and the contractor.

2.10 APPLICABLE LAWS, ORDINANCES, REGULATIONS AND STANDARDS (LORS)

LORS applicable to the proposed project are shown in Table 2.10-1. Please note that the design of all structures and facilities will be based on building codes, specifications, industry standards and regulations. All designs and construction methods will be in accordance with the LORS that are in effect at the time that building plans are first submitted to the Chief Building Official for review and approval. All building permits will be reviewed during the building permit approval process by Riverside County.

2.10.1 Engineering Geology

Unless specifically stated otherwise, the design of all structures and facilities will be based on the laws, ordinances, codes, specifications, industry standards and regulations, and other reference documents in effect at the time of design. Applicable codes and industry standards with respect to the project's engineering geology are summarized in sections of Appendix B, Foundations and Civil Engineering Design Criteria, and Appendix C, Structural and Seismic Engineering Design Criteria.

2.10.2 Civil and Structural Engineering

Unless specifically stated otherwise, the design of all structures and facilities will be based on the laws, ordinances, codes, specifications, industry standards and regulations, and other reference documents in effect at the time of design. Applicable codes and industry standards with respect to the project's engineering design criteria, construction and operation are summarized in Appendix B, Foundations and Civil Engineering Design Criteria, and Appendix C, Structural and Seismic Engineering Design Criteria.

2.10.3 Mechanical Engineering

Unless specifically stated otherwise, the design of all structures and facilities will be based on the laws, ordinances, codes, specifications, industry standards and regulations, and other reference documents in effect at the time of design. Applicable codes and industry standards with respect to the project's mechanical engineering design criteria, construction, and operation are summarized in Appendix D, Mechanical Engineering Design Criteria. Applicable sections of Appendix E, Control Systems Engineering Design Criteria, will also be considered.

2.10.4 Electrical and Control Systems Engineering

Unless specifically stated otherwise, the design of all structures and facilities will be based on the laws, ordinances, codes, specifications, industry standards and regulations, and other reference documents in effect at the time of design. Applicable codes and industry standards with respect to the project's electrical engineering design criteria, construction and operation are summarized in Appendix F, Electrical Engineering Design Criteria. Applicable sections of Appendix E, Control Systems Engineering Design Criteria, will also be considered.

2.11 INVOLVED AGENCIES AND AGENCY CONTACTS

Agency contacts regarding facility design of the proposed project are shown below.

Agency/Address	Contact/Title	Telephone
California Air Resources Board P.O. Box 2815 1001 I Street Sacramento, CA 95812	Michael Tollstrup, Chief, Project Assessment Branch Stationary Source Division	(916) 322-6026
California Department of Fish and Game Palm Springs office. 78078 Country Club Drive Suite 109 Bermuda Dunes, CA 92203	Kim Nicol, Regulatory Biologist	(760) 200-9158
California Department of Transportation District 8 464 West 4th St., San Bernardino, CA 92401-1400	Greg Ramirez, PE, Senior Transportation Engineer Julie Griffin, Transportation Engineer Terri Kasinga, Public Information Officer	(909) 383-6309 (909) 383-4331 (909) 383-4631
California Energy Commission 1519 Ninth Street Sacramento, CA 95814	Joe Loyer, Associate Mechanical Engineer Rick York Keith Golden Air Quality Specialist Mike Ringer Public Health Specialist Eric Knight, Supervisor	(916) 654-4287 (916) 654-3945 (916) 654-4287 (916) 654-4287 (916) 653-1850
City of Palm Springs Department of Planning Services 3200 E Tahquitz Canyon Way Palm Springs, CA 92262	Craig Ewing Director of Planning	(760) 323-8269
City of Palm Springs Fire Department 300 N. El Cielo Road Palm Springs, CA 92262	Carl Thibeault, Fire Marshal Chief Scott Ventura Blake G. Goetz, Fire Chief	(760) 323-8186 (non-emergency) (760) 323-8181
Coachella Valley Water District P.O. Box 1058 Coachella, CA 92236	Dan Parks Engineering Manager	(760) 398-2651

Agency/Address	Contact/Title	Telephone
Colorado River Basin Regional Water Quality Control Board	Adnam Al-Sarabi, Supervising WRCE Jon Rokke Water Resource Control Engineer Kirk Larkin, Senior Water Resources Control Engineer	(760) 776-8945 (760) 776-8959 (760) 340-4521
County of Riverside Transportation and Land Management Agency Engineering/Planning Division	Bob Lyman, Regional Office Manager Tony Carstens, Director Tesfu Tadesfe, Senior Engineering Technical	(951) 955-6742 (951) 955-3789
County of Riverside, Department of Public Works, Development Review	Herman Basmaciyan, Traffic Engineer Farah Khorashadi, Group Manager Kevin Tsang, Engineer	(951) 955-6828
Desert Water Agency 1200 Gene Autry Trail South P.O. Box 1710 Palm Springs, CA 9263	David Luker General Manager	(760) 323-4971
Federal Aviation Administration Western-Pacific Region P.O. Box 92007 Los Angeles, CA 90009	Karen McDonald	(310) 725-6557
Mission Springs Water District 66575 Second Street Desert Hot Springs, CA 92240	Arden Wallum General Manager	(760) 329-5169
Natural Resources Conservation Service	Peter Fahnestock, Soil Scientist	(760) 843-6882
Pressure Vessel Unit District Office Division of OSHA 2000 E. McFadden, Suite 215 Santa Ana, CA 92705	Safety Engineer	(714) 567-7208
Riverside County Department of Environmental Health, Indio Office 47-950 Arabia Street, Suite A Indio, CA 92201	Jim Ray, Hazardous Materials Supervisor and Specialist	(760) 863-8976
Riverside County Fire Department 210 West San Jacinto Avenue Perris, CA 92570	John R. Hawkins, County Fire Chief	(916) 653-5123
Riverside County Planning Department 82675 Highway 111 Indio, CA 92201	Paul Clark, Principal Planner Jay Olivas, Planner	(760) 863-8277 (760) 863-7579

Agency/Address	Contact/Title	Telephone
Riverside County Transportation Commission (RCTC) 4080 Lemon Street, 3rd Floor Mailing Address: P.O. Box 12008 Riverside, CA 92502-2208	Shirley Gooding	(951) 787-7141
South Coast Air Pollution Control District 21865 Copley Dr, Diamond Bar, CA 91765	Tom Chico, Senior Modeler	(909) 396-3149
State of California Environmental Protection Agency California Regional Water Quality Control Board, Colorado River Basin Region 73-720 Fred Waring Drive, Suite 100 Palm Desert, CA 92260	Jon Camona	(760) 776-8939
State of California, California Geological Survey	Bill Bryant	(916) 323-9672
U.S. Fish and Wildlife Service Carlsbad Fish and Wildlife Office 6010 Hidden Valley Road, Carlsbad, CA 92011	Jon Avery, Regulatory Biologist Carol A Roberts Division Chief/Salton Sea Coordinator	(760) 431-9440 (760) 431-9440

Table 2.2-1 Parcels and Location of Proposed Project Site Features	
APN	**Township/Range/Section**
Proposed Power Plant Site - Intersecting Township/Range/Sections and Parcels within 1,000 feet	
668130005	03S 04E 04
668130007	03S 04E 04
668140001	03S 04E 04
Proposed Transmission Line - Intersecting Township/Range/Sections and Parcels within 500 feet	
668130022	03S 04E 04
668130007	03S 04E 04
668130016	03S 04E 04
668130020	03S 04E 04
668130018	03S 04E 04
668130021	03S 04E 04
668130017	03S 04E 04
668130019	03S 04E 04
Proposed Gas Transmission Corridor - Intersecting Township/Range/Sections and Parcels within 500 feet	
666120007	03S 04E 10
666120012	03S 04E 10
666130006	03S 04E 10
666130007	03S 04E 10
666140002	03S 04E 10
666140003	03S 04E 10
666140022	03S 04E 10
666150001	03S 04E 10
666150002	03S 04E 10
666320003	03S 04E 15
666320005	03S 04E 15
666320007	03S 04E 15
666320009	03S 04E 15
666320010	03S 04E 15
666320012	03S 04E 15
666320013	03S 04E 15
666320014	03S 04E 15
666330001	03S 04E 15
668270009	03S 04E 09
Proposed Potable Water/Access Road Corridor - Intersecting Township/Range/Sections and Parcels within 500 feet	
668140001	03S 04E 04
668140008	03S 04E 04
668140009	03S 04E 04
668140020	03S 04E 04
668140021	03S 04E 04
668140022	03S 04E 04
668140023	03S 04E 04
668270009	03S 04E 09
668270011	03S 04E 09

Table 2.4-1
Major Equipment List

Quantity	Description	Size/Capacity[1]	Remarks
8	Combustion Turbine (CT)	100+ MW	Water Injected for NO_X control
8	Generators	155 MVA	Included with CT
8	CT Inlet Air Cooling	85%+ Effective	Evaporative Cooling/Inlet Fog System
6	Fuel Gas Compressors	950 psi discharge	
8	SCR/Oxcat Emissions Control Systems	BACT	
2	Raw Water Storage Tanks	1,128,000 gal	One includes fire water reserve
2	Treated Water Storage Tanks	864,000 gal	
1	Cooling Tower	675 MMBtu/hr	Five-Cell
1	Cooling Tower	405 MMBtu/hr	Three-Cell
1	Fire Water Pump Skid	2,000 gpm	Jockey; Motor; and Diesel-Driven Pumps
3	Cooling Water (CWP) Pumps	19,650 gpm	
3	Cooling Water (CWP) Pumps	11,790 gpm	
5	Plant Air Compressors and Dryers	1,500 SCFM	
8	Step-up Transformers	13.8/220 kV	To electrical grid

Note:

1 Approximate size/capacity for each piece of equipment. Final sizing and configuration will be determined during detailed design.

Psi = pounds per square inch

Table 2.4-2
Significant Structures and Equipment

Quantity	Description	Dimensions		
		Length (feet)	Width (feet)	Height (feet)
8	Combustion Turbine Generators (CTG)	130	90	40 (55 for VBV Duct)
8	CTG Simple Cycle SCR/Oxcat/Stack	67	30 (stack 13.5 in diameter)	90
1	Cooling Tower	211	55	36 (46-foot stacks)
1	Cooling Tower	127	55	36 (46-foot stacks)
2	Cooling Tower Building/Warehouse	125	60	20-foot eave
2	Operations Building	130	70	20-foot eave
1	Gas Compression Building	120	60	20-foot eave
1	Gas Compression Building	90	60	20-foot eave
8	Transformer Vaults with GSU	32	24	24
8	Unit Control Building	40	20	12-foot eave
2	Raw Water Storage Tank	–	80 dia.	36
2	Treated Water Storage Tank	–	70 dia.	36
1	Fire Water Pump Enclosure	30	11	12
1	Switchyard, Buses, and Towers	1,275	100	90-foot poles
2	Switchyard Building	60	25	16-foot eave

Note:
[1] Final equipment sizing will be determined during the project detail design phase.

Table 2.4-3
Heat and Mass Balance

No. of Combustion Turbines		8																
Stream	**Description**	**Units**	**Heat and Mass Balance Data Table (Reference Figure 2.4-4 for graphic and stream identification)**															
---	Case Number	---	111	112	100	113	114	115	116	117	118	103	119	120	121	107	122	123
---	Ambient Temperature	°F	0	10	17	20	30	40	50	60	70	72	80	90	100	107	110	120
---	Ambient Relative Humidity	%	80	80	80	60	60	60	62.7	49	41.5	40	35.6	30.2	21.7	18.4	16.8	12.7
Per Combustion Turbine																		
101	Inlet Air	klb/hr	1,635	1,630	1,632	1,622	1,614	1,613	1,602	1,574	1,574	1,570	1,550	1,524	1,508	1,494	1,490	1,474
102	Natural Gas	MMBtu/hr	787	792	790	798	806	806	810	796	794	792	781	767	759	752	750	742
		klb/hr	38.2	38.4	38.3	38.8	39.1	39.1	39.3	38.6	38.6	38.4	37.9	37.2	36.8	36.5	36.4	36.0
103	Fog/Evap Water	klb/hr	0.0	0.0	0.0	0.0	0.0	0.0	0.0	0.0	4.3	4.6	5.5	6.9	9.0	10.3	10.9	12.9
104	NO_X Inject Water	klb/hr	34.2	34.4	34.1	35.0	35.3	34.8	34.6	33.5	31.7	31.4	30.0	29.1	28.7	28.3	28.1	27.7
105	Fog/Evap Drain	klb/hr	0.0	0.0	0.0	0.0	0.0	0.0	0.0	0.0	0.6	0.7	0.8	1.0	1.3	1.5	1.6	1.9
106	Intercooler Drain	klb/hr	0.0	0.0	0.0	0.0	0.0	0.0	0.0	0.0	0.0	0.0	0.0	2.9	4.3	6.1	6.5	8.6
107	VBV Vent	klb/hr	0.0	0.0	0.0	0.0	0.0	0.0	0.0	0.0	0.0	0.0	0.0	0.0	0.0	0.0	0.0	0.0
108	Cooling Water Supply	klb/hr	3,930	3,930	3,930	3,930	3,930	3,930	3,930	3,930	3,930	3,930	3,930	3,930	3,930	3,930	3,930	3,930
109	Cooling Water Return	klb/hr	3,930	3,930	3,930	3,930	3,930	3,930	3,930	3,930	3,930	3,930	3,930	3,930	3,930	3,930	3,930	3,930
	Cooling Tower Duty	MMBtu/hr	75	80	79	85	90	90	94	97	96	96	97	100	102	104	105	107
110	Combustion Turbine Exhaust	klb/hr	1,708	1,703	1,705	1,696	1,688	1,687	1,676	1,646	1,644	1,639	1,618	1,590	1,573	1,559	1,554	1,538
111	SCR Purge Air	klb/hr	0.0	0.0	0.0	0.0	0.0	0.0	0.0	0.0	0.0	0.0	0.0	0.0	0.0	0.0	0.0	0.0
112	Aqueous Ammonia	klb/hr	0.1	0.2	0.1	0.2	0.2	0.2	0.2	0.2	0.2	0.2	0.1	0.1	0.1	0.1	0.1	0.1
113	SCR Transport Air	klb/hr	TBD	TBD	TBD	TBD	TBD	TBD	TBD	TBD	TBD	TBD	TBD	TBD	TBD	TBD	TBD	TBD
114	Not Used	---	---	---	---	---	---	---	---	---	---	---	---	---	---	---	---	---
115	Stack Exhaust	klb/hr	1,708	1,703	1,705	1,696	1,688	1,687	1,676	1,646	1,644	1,640	1,618	1,590	1,574	1,559	1,554	1,538
		°F	739	746	743	756	767	768	779	784	785	785	789	794	797	799	800	803
Total All Combustion Turbines																		
---	Plant Net Power	MA	789	792	791	795	800	800	801	782	782	779	766	747	769	726	723	712
---	Plant Net Heat Rate (LHV)	Btu/kwh	7,978	7,998	7,988	8,030	8,060	8,057	8,088	8,140	8,123	8,129	8,160	8,215	8,250	8,282	8,292	9330
---	Plant Fuel Consumption	MMBtu/re	6,990	7,030	7,014	7,090	7,153	7,154	7,195	7,064	7,052	7,031	6,935	6,813	6,741	6,677	6,657	6,585
101	Inlet Air	klb/hr	13,082	13,040	13,057	12,977	12,909	12,907	12,814	12,589	12,590	12,557	12,400	12,190	12,064	11,954	11,918	11,792
102	Natural Gas	MMBtu/hr	6,298	6,334	6,318	6,387	6,444	6,446	6,482	6,364	6,354	6,335	6,247	6,138	6,073	6,016	5,998	5,933
		klb/hr	305.7	307.5	306.7	310.1	312.8	312.9	314.7	308.9	308.4	307.5	303.3	298.0	294.8	292.0	291.1	288.0
103	Fog/Evap Water	klb/hr	0.0	0.0	0.0	0.0	0.0	0.0	0.0	0.0	34.4	36.4	44.1	55.2	71.8	82.0	86.9	103.2
104	NO_X Inject Water	klb/hr	273.7	275.4	272.4	279.8	282.3	278.5	276.7	268.3	253.7	251.2	239.8	232.8	229.2	226.1	225.1	221.5
105	Fog/Evap Drain	klb/hr	0.0	0.0	0.0	0.0	0.0	0.0	0.0	0.0	5.2	5.5	6.6	8.3	10.8	12.3	13.0	15.5
106	Intercooler Drain	klb/hr	0.0	0.0	0.0	0.0	0.0	0.0	0.0	0.0	0.0	0.0	0.0	23.0	34.6	49.0	51.8	69.1
107	VBV Vent	klb/hr	0.0	0.0	0.0	0.0	0.0	0.0	0.0	0.0	0.0	0.0	0.0	0.0	0.0	0.0	0.0	0.0
108	Cooling Water Supply	klb/hr	31,440	31,440	31,440	31,440	31,440	31,440	31,440	31,440	31,440	31,440	31,440	31,440	31,440	31,440	31,440	31,440
109	Cooling Water Return	klb/hr	31,440	31,440	31,440	31,440	31,440	31,440	31,440	31,440	31,440	31,440	31,440	31,440	31,440	31,440	31,440	31,440
	Cooling Tower Duty	MMBtu/hr	598	640	629	680	719	719	756	773	767	768	774	802	819	835	840	859
110	Combustion Turbine Exhaust	klb/hr	13,662	13,623	13,636	13,566	13,505	13,498	13,405	13,167	13,153	13,116	12,943	12,721	12,588	12,472	12,434	12,302
111	SCR Purge Air	klb/hr	0.0	0.0	0.0	0.0	0.0	0.0	0.0	0.0	0.0	0.0	0.0	0.0	0.0	0.0	0.0	0.0
112	Aqueous Ammonia	klb/hr	1.2	1.2	1.2	1.2	1.2	1.2	1.2	1.2	1.2	1.2	1.2	1.2	1.2	1.1	1.1	1.1
113	SCR Transport Air	klb/hr	TBD	TBD	TBD	TBD	TBD	TBD	TBD	TBD	TBD	TBD	TBD	TBD	TBD	TBD	TBD	TBD
114	Not Used	---	---	---	---	---	---	---	---	---	---	---	---	---	---	---	---	---
115	Stack Exhaust	klb/hr	13,663	13,624	13,637	13,568	13,506	13,500	13,407	13,168	13,154	13,117	12,944	12,722	12,589	12,473	12,435	12,303
		°F	739	746	743	756	767	768	779	784	785	785	789	794	797	799	800	803

SCR = selective catalytic reduction
TBD = to be determined

Table 2.4-4 Construction Water Requirements	
Construction Month	**Thousand Gallons**
1	1,600
2	1,600
3	1,600
4	800
5	800
6	800
7	800
8	800
9	760
10	910[1]
11	713
12	673
13	593
14	376
15	354
16	343
17	183
18	160
Total	**13,863,713 (gallons)**
Total	**42 (acre feet)**
Average Monthly	**770,206 (gallons)**
Average Daily	**25,673 (gallons)**
[1]Month 10 includes 300,000 gallons of water for hydrotesting purposes	

Table 2.4-5
Water Balances

No. of Combustion Turbines 8			Water Balance Data Table							
Stream	**Description**	**Units**	**Reference Figure 2.4-6 for graphic and stream identification)**							
---	Case Number	---	107	120	123	---	---	---	---	
---	Ambient Temperature	°F	107	90	120	---	---	---	---	
---	Ambient Relative Humidity	%	18.4%	30.2%	12.7%	---	---	---	---	
	Total-All Combustion Turbines		**SCE-Test**	**Typical Summer Operation**	**Maximum**	**Est. Annual Avg. Based on Expected 15% Dispatch, GPM (1)**	**Est. Annual Total Based on Expected 15% Dispatch, AFY (2)**	**Est. Annual Avg. Based on 34% Capacity, GPM (3)**	**Est. Annual Total Based on 34% Capacity, AFY (4)**	**Comments**
1	Water Supply	gpm	2,022	1,975	2,059	296	478	671	1,083	
2	Raw Water Makeup To Cooling Tower, MDS, & Service Water	gpm	2,022	1,975	2,059	296	478	671	1,083	
3	Potable Water / Sanitary Waste	gpm	4.00	4.00	4.00	0.6	1.0	1.4	2.2	Estimate
4	Service Water	gpm	1.00	1.00	1.00	0.2	0.2	0.3	0.5	Estimate
5	Service Water Wastewater	gpm	1.00	1.00	1.00	0.2	0.2	0.3	0.5	
6	OWS Sludge Water	gpm	0.00	0.00	0.00	0.0	0.0	0.0	0.0	Assume average is negligible
7	OWS Wastewater	gpm	1.00	1.00	1.00	0.2	0.2	0.3	0.5	
8	OWS Recovered Wastewater	gpm	1.00	1.00	1.00	0.2	0.2	0.3	0.5	
9	Raw Water Makeup To Cooling Tower & DM System	gpm	2,021	1,974	2,058	296	478	671	1,083	
10	Raw Water Makeup to Mobile DI	gpm	599.5	559.5	633.1	84	135	190	307	
11	Cooling Tower Makeup	gpm	1,765	1706	1808	256	413	580	936	
12	Cooling Tower Evaporation	gpm	1,503	1444	1546	217	349	491	792	
13	Cooling Tower Drift	gpm	0.31	0.31	0.31	0.05	0.08	0.11	0.17	
14	Cooling Tower Blowdown to Wastewater Collection	gpm	262.0	262.0	262.0	39	63	89	144	
15	Wastewater Feed to MF	gpm	262.0	262.0	262.0	39	63	89	144	
16	Total Feed to MF (excludes high rate feed recirculation - internal loop)	gpm	363.6	363.6	363.6	55	88	124	199	
17	MF Filtrate (RO Feed)	gpm	362.4	362.4	362.4	54	88	123	199	
18	MF Reject Stream	gpm	10.1	10.1	10.1	2	2	3	6	
19	Recovered Thickener Decant	gpm	4.04	4.04	4.04	1	1	1	2	
20	Filter Press Feed	gpm	6.06	6.06	6.06	1	1	2	3	Assume 3% solids thickened to 5% solids
21	Filter Press Filtrate	gpm	4.95	4.95	4.95	1	1	2	3	Assume 5% solids to 25% solids
22	Filter Press Solids	gpm	1.21	1.21	1.21	0	0	0	1	Assume 25% dry solids
23	RO Product (Recovered to Cooling Tower)	gpm	242.8	242.8	242.8	36	59	83	133	67% Recovery
24	RO Reject	gpm	119.6	119.6	119.6	18	29	41	66	
25	RO Reject Feed to Crystallizer	gpm	20.0	20.0	20.0	3	5	7	11	Approx 4% dry solids
26	RO Reject Recirculated	gpm	99.6	99.6	99.6	15	24	34	55	
27	Crystallizer Distillate (to mobile DI)	gpm	19.0	19.0	19.0	3	5	6	10	
28	Crystallizer Sludge (Centrifuge feed)	gpm	2.93	2.93	2.93	0	1	1	2	Assume 30% dry solids
29	Centrifuge Solids	gpm	0.98	0.98	0.98	0	0	0	1	Assume 90% dry solids
30	Centrifuge Liquid (Recover to crystallizer)	gpm	1.95	1.95	1.95	0	0	1	1	
31	Mobile DI System Feed	gpm	643.3	595.3	683.3	89	144	202	326	
32	DM Water Storage Tank Feed	gpm	643.3	595.3	683.3	89	144	202	326	
33	DM IE rinse water (out)	gpm	2.00	2.00	2.00	0.3	0.5	0.7	1.1	

Table 2.4-5
Water Balances

No. of Combustion Turbines 8			Water Balance Data Table							
Stream	**Description**	**Units**	**Reference Figure 2.4-6 for graphic and stream identification)**							
---	Case Number	---	107	120	123	---	---	---	---	
---	Ambient Temperature	°F	107	90	120	---	---	---	---	
---	Ambient Relative Humidity	%	18.4%	30.2%	12.7%	---	---	---	---	
Total-All Combustion Turbines			**SCE-Test**	**Typical Summer Operation**	**Maximum**	**Est. Annual Avg. Based on Expected 15% Dispatch, GPM (1)**	**Est. Annual Total Based on Expected 15% Dispatch, AFY (2)**	**Est. Annual Avg. Based on 34% Capacity, GPM (3)**	**Est. Annual Total Based on 34% Capacity, AFY (4)**	**Comments**
34	DM rinse wastewater to Cooling Tower	gpm	2.00	2.00	2.00	0.3	0.5	0.7	1.1	
35	WFI Feed	gpm	452.0	465.6	443.2	70	113	158	255	
36	Inlet Fogger Feed	gpm	188.8	127.2	237.6	19	31	43	70	
37	Misc. DM Water Use	gpm	0.50	0.50	0.50	0.1	0.1	0.2	0.3	Estimate
38	DM Rinse Water (in)	gpm	2.00	2.00	2.00	0.3	0.5	0.7	1.1	Estimate
39	Fogger Evaporation	gpm	164.0	110.4	206.4	17	27	38	61	
40	Fogger Mist Eliminator Drains	gpm	24.8	16.8	31.2	3	4	6	9	
41	Condensed Moisture from Intercooler	gpm	98.0	46.0	138.0	7	11	16	25	
42	Combined Feed to Crystallizer	gpm	22.0	22.0	22.0	3	5	7	12	

Reference: Aquagenics, Inc.
Notes:
[1] Estimated annual average (GPM) based on expected 15% dispatch and the typical summer operation (90°F case above).
[2] Total annual usage (AFY) based on expected 15% dispatch and the typical summer operation (90°F case above).
[3] For comparison, annual average (GPM) is also calculated based on 34% capacity factor and the typical summer operation (90°F case above).
[4] For comparison, total annual usage (AFY) is also calculated based on 34% capacity factor and the typical summer operation (90°F case above).

Table 2.4-6
Daily and Annual Average Water Consumption Requirements

Stream Name	Maximum Flow[1] (gpm)	Estimated Annual Avg. Flow at 15% Dispatch[2] (gpm)	Estimated Annual Usage at 15% Dispatch[3] acre ft/year)	Annual Avg. Flow at 34% Capacity [4] (gpm)	Annual Usage at 34% Capacity [5] acre ft/year)
Plant Water Usage:					
CTG Inlet Air Cooling System	238	19	31	43	70
CTG NO_X Injection	443	70	113	158	255
Miscellaneous DM users	0.5	0.1	0.1	0.2	0.3
CTG Cooler Evaporation	1,546	217	349	491	572
Cooling Tower Drift	0.3	0.05	0.08	0.1	0.2
Cooling Tower Blowdown	262	39	63	89	144
Service Water	1.0	0.2	0.2	0.3	0.5
Recovered Water:					
Recovered Water from Intercooler	138	7	11	16	25
Recovered Water from RO	243	36	59	83	133
Recovered Water from Crystallizer	19	3	5	6	10
Recovered Water from Inlet Air Cooling System	31	3	4	6	9
Total Plant Water Usage Requirements	**2,059**	**291**	**478**	**671**	**1,083**
Potable Water/Sanitary Waste	4	1	2	1	2

Notes:
[1] Maximum flow rates herein based on 120°F ambient condition.
[2] Estimated annual average flow based on typical summer operation (90°F ambient) and expected 15% dispatch.
[3] Estimated annual usage based on typical summer operation (90°F ambient) and expected 15% dispatch.
[4] For comparison, annual average flow is also calculated based on based on typical summer operation (90°F ambient) and assumed 34% capacity factor.
[5] For comparison, annual average usage is also calculated based on based on typical summer operation (90°F ambient) and assumed 34% capacity factor.

Table 2.4-7
Onsite Groundwater Well Water Analysis

Component	Method	Units	November 2006[2] Result	March 2007[3] Result
Aluminum	6010B	µg/L	NA	<100
Ammonia-N	350.2	mg/L	NA	<0.10
Antimony	6010B	µg/L	0.34	<10
Arsenic	6010B	µg/L	2.3	<5.0
Barium	6010B	µg/L	8.6	12
Beryllium	6010B	µg/L	<1.0	<2.0
Bicarbonate Alkalinity	310.1	mg/L	103	110
Biochemical Oxygen Demand	405.1	mg/L	NA	<5.0
Cadmium	6010B	µg/L	NA	<5.0
Calcium	6020	µg/L	9,630	9,800
Carbonate Alkalinity	310.1	mg/L	2.3	<4
Chemical Oxygen Demand	410.4	mg/L	NA	<10
Chloride	300.0A	mg/L	26.5	27
Chromium	6010B	µg/L	0.91	<5.0
Cobalt	6010B	µg/L	<1.0	<5.0
Copper	6010B	µg/L	0.85	<5.0
Fluoride	300.0	mg/L	NA	0.57
Hardness, as $CaCO_3$	2340B	mg/L	29.7	110
Hydroxide Alkalinity	310.1	mg/L	<4	<4
Iron	6020	µg/L	<50	<100
Lead	6010B	µg/L	0.21	<3.0
Magnesium	6020/6010B	µg/L	1,380	1,700
Manganese	6010B	µg/L	NA	<5.0
Mercury	6010B	µg/L	<0.20	<0.20
Molybdenum	6010B	µg/L	7.3	8.8
Nickel	6010B	µg/L	<2.0	<5.0
Nitrate as N	300.0A	mg/L	0.73	0.87
Nitrite as N	300.0A	mg/L	<0.1	<0.05
Oil and Grease	1664A	mg/L	NA	<4.75
Orthophosphate as P	365.2	mg/L	NA	0.033
Perchlorate	314.0	µg/L	NA	<4
pH	9040B	SU	8.3	7.8
Phosphorus	365.2	mg/L	NA	<0.03
Potassium	6010B	µg/L	NA	4,000
Selenium	6010B	µg/L	1.3	<10
Silica	370.1	mg/L	NA	11
Silver	6010B	µg/L	<1.0	<5.0
Sodium	6020/6010B	µg/L	51,200	54,000
Specific Conductance	120.1	µmhos/cm	311	300
Strontium[4]	6010B	mg/L	NA	0.115
Sulfate	300.0A	mg/L	7.9	8.3
Sulfide	376.2	mg/L	NA	<0.04
Thallium	6010B	µg/L	<1.0	<10
Total Alkalinity as $CaCO_3$	310.1	mg/L	106	110
Total Dissolved Solids	160.1	mg/L	193	150
Total Organic Carbon	415.2	mg/L	NA	<0.50
Total Suspended Solids	160.2	mg/L	<10	<5
Vanadium	6010B	µg/L	38.3	38
Zinc	6020	µg/L	44.3 and 49.5	70

Notes:
NA = not analyzed
[1] "<" indicates result was less than the indicated reporting limit
[2] Samples collected on November 13 and 14, 2006. Results by Severn Trent Laboratories, Inc., November 24 and 30, 2006
[3] Samples collected on March 29, 2007. Results by Curtis & Tompkins Laboratories, Inc., April 2007 - Preliminary
[4] Strontium analysis by Calscience Environmental Laboratories, Inc., March 31, 2007

Table 2.4-8
Summary of Chemical Usage and Storage – Water and Wastewater Treatment

Chemical	Primary Application	Estimated 30-Day Usage [1]	Estimated Storage Quantity[1]
Sodium Hypochlorite (12.5%, Trade)	Biocide/Biofilm Control (Raw Water Tank, Circulating Water, MF System)	3,100 gallons	4,000 gallons
Sulfuric Acid (93%) [2]	pH Control (Cooling Tower Makeup, MF System, RO System)	4,200 gallons	5,000 gallons
Dispersant/Corrosion Inhibitor (neat)	Scale/Corrosion Control (Circulating Water)	350 gallons	400 gallons
Ferric Chloride (38%)	Coagulant (MF System)	150 gallons	200 gallons
Sodium Hydroxide (25%)	Alkalinity Control (MF System)	15,000 gallons	20,000 gallons
Sodium Carbonate (99%, solid)	Alkalinity Control (MF System)	40,000 pounds	25 ton
Magnesium Sulfate (30%)	Silica Removal (MF System)	2,900 gallons	3,500 gallons
Hydrochloric Acid (38%)	MF Membrane Cleaning	300 gallons	400 gallons
Antiscalant (neat)	RO System	20 gallons	25 gallons
Sodium Bisulfite (38%)	Dechlorination (RO System)	310 gallons	400 gallons
Polymer Thickening Aid (neat)	Gravity Thickener (MF System)	2 gallons	5 gallons
RO Membrane Cleaners (neat)	RO System	2 gallons	5 gallons
Anti-foaming Agent	Crystallizer	50 gallons	55 gallons

Notes:
[1] Expected based on 107 °F operation condition. Usage and storage will be optimized during final design.
[2] California Toxic Chemical

Table 2.4-9
Summary of Anticipated Construction Waste Streams and Management Methods
(Page 1 of 2)

Waste Stream	Anticipated Waste Stream Classification	Estimated Quantity	Estimated Frequency of Generation	Waste Management Method	
				Onsite	Offsite Treatment
Scrap wood, glass, plastic, paper,	Nonhazardous solids	40 cubic yards	Weekly	Containerize (20 ton dumpsters), housekeeping	Recycle and/or Class III landfill disposal
Waste concrete	Nonhazardous solid	10 cubic yards	Weekly	Containerize/stockpile	Recycle/reuse on site/Class III landfill disposal
Scrap Metal	Nonhazardous solid	3 cubic yards	Weekly	10 ton dumpsters	Recycle and/or Class III landfill disposal
Sanitary Waste (toilets and sinks)	Nonhazardous solids/liquids	1,500 gallons	Weekly	Portable self-contained toilets and holding tanks at trailers	Weekly collection (minimum) and off-site treatment/disposal.
Empty hazardous material containers	Hazardous solids	1 cubic yard	Weekly	Store for less than 90 days	Recycle and/or Class I/II landfill disposal
Spent welding materials	Hazardous solid	Less than 1 cubic yard	Weekly	Containerize	Dispose at Class I landfill
Waste oil filters	Hazardous solid	200 pounds	Monthly	Containerize	Dispose at Class I landfill
Waste Oil including Used Motor Oil, Transmission Fluid, and Hydraulic Fluid, Antifreeze	Hazardous liquids	20 Gallons	Weekly	Containerize, stored on-site in 90-day hazardous waste storage area	Authorized hazardous waste management company collection and off-site treatment/recycling disposal

Table 2.4-9
Summary of Anticipated Construction Waste Streams and Management Methods
(Page 2 of 2)

Waste Stream	Anticipated Waste Stream Classification	Estimated Quantity	Estimated Frequency of Generation	Waste Management Method	
				Onsite	Offsite Treatment
Oil rags, oil absorbent generated during normal construction activities	Hazardous solids	Less than 2 cubic yards	Weekly	Store for less than 90 days	Oily rags would be recycled. Class I landfill disposal for other solids.
Solvents, waste paints, and thinners	Hazardous liquids	2 US gallons	Weekly	Store for less than 90 days	Recycle or disposal at TSDF.
Spent lead acid batteries	Hazardous solids	2 batteries	Yearly	Store for less than 1 year	Recycled
Spent alkaline batteries	Hazardous solids	60 batteries	Monthly	Store for less than 1 year	Recycled
Stormwater from construction area	Nonhazardous liquids	716,000 US gallons	For a once in 2 year, 24 hour storm event	NPDES Stormwater program	Discharge to the stormwater retention basin
Fluorescent, mercury vapor lamps	Hazardous solids	30	Yearly	Store for 1 year	Recycle
Hydrotest water	Hazardous or nonhazardous liquids	750,000 US gallons	Once before initial startup	Sample. If suitable for discharge, route to retention basin. If hazardous, store for less than 90 days.	If hazardous, dispose to TSDF

Table 2.4-10
Summary of Anticipated Operating Waste Streams and Management Methods
(Page 1 of 2)

Waste Stream	Waste Stream Classification	Estimated Amount	Estimated Frequency of Generation	Waste Management Method	
				Onsite	Offsite Treatment
Used hydraulic fluid, oils and grease, and oily filters from CTG and other users of hydraulic actuators and lubricants	Hazardous	Less than 5 gallons	Daily	Store for less than 90 days	Waste Oils, hydraulic fluids and antifreeze would be recycled
Spent lead acid and alkaline batteries	Hazardous solids	5 (Lead Acid) 30 (Alkaline)	Lead Acid – Yearly Alkaline -Monthly	Store for less than 1 year	Recycle
Spent catalyst (heavy metals)	Hazardous solids	120,000 lbs	Every 5 years	Removed to truck by licensed contractors	Recycle
Waste oil from oil water separator	Hazardous	15 US gallons	Yearly	None – removed directly from oil water separator	Oil would be recycled
Oily rags, oil absorbent from CTG and other users of hydraulic actuators and lubricants	Hazardous solids	Two 55 gallon containers	Monthly	Store for less than 90 days	Oily rags would be recycled Class I landfill disposal for other solids
CTG used air filters	Nonhazardous solids	2,000 filters	Every 5 years	Store for less than 90 days	Recycle/Class III landfill disposal
CTG water wash	Hazardous or nonhazardous liquids	10,000 US gallons	Yearly	Sample. Store hazardous portion for less than 90 days	Dispose to a TSDF if hazardous

Table 2.4-10
Summary of Anticipated Operating Waste Streams and Management Methods
(Page 2 of 2)

Waste Stream	Waste Stream Classification	Estimated Amount	Estimated Frequency of Generation	Waste Management Method	
				Onsite	Offsite Treatment
Fluorescent, mercury vapor lamps	Hazardous solids	30	Yearly	Store for 1 year	Recycle
Sanitary wastewater	Nonhazardous liquids	1,500 US gallons	Daily	Solids pumped once every 3 years to tanker truck by licensed contractors	Discharge to onsite septic tank and leach field
Stormwater	Nonhazardous liquids	716,000 US gallons	For a once in 2 year, 24 hour storm event	NPDES Stormwater program	Discharge to the stormwater retention basin
Salts from zero liquid discharge rotary drum	Nonhazardous solids	200 lbs	Daily	Store for less than 90 days	Class III/II landfill disposal

Table 2.4-11
Summary of Chemicals Usage and Storage - Nonwater Treatment

Chemical	Application	Storage Location	Storage or Usage Quantity	
			Average	Maximum
Natural gas	Fuel for power plant	Piped into plant on as-needed basis	NA	NA
Aqueous Ammonia (29%)	NO_X reduction in SCR	NE end of property	12,000 gal	24,000 gal
Mineral Oil	Transformers	--	123,500 gal, initial fill	
Sulfur Hexafluoride	Switchyard Breakers	Within Equipment	600 lbs	
Turbine and Generator Lube Oil	Rotating equipment	CTG	50,000 gal	
Hydraulic Oil	Rotating equipment	CTG	500 gal	
Carbon dioxide	Fire protection, generator purging	CTG Bottle Racks	32,000 lb initial fill	NA
Various detergents	Combustion turbine cleaning	--	1000 lb, before startup	Periodic short-term storage 500 lb
Dryer desiccant	Instrument air	Instrument air dryer	600 lb	
Diesel fuel	Fire water pump	Fire water skid	180 gal, initial fill	Maintain full diesel tank
Diesel fuel	Black Start Generator	Black Start Generator	1,300 gal, initial fill	Maintain full diesel tank

•

Table 2.4-12 Fire Protection Systems Design Conditions	
Location	**Type of System**
Buildings	Automatic Clean Agent System per NFPA for control room. Wet/dry/pre-action sprinkler system for administrative areas and offices. Fire water supply is from an on-site water storage tank. NOTE: The fixed fire systems in the buildings are provided as required by local jurisdiction. Hose stations and portable extinguishers are provided throughout buildings as required by Code. Detection system and fire alarm pull stations are provided for the control room, combustion turbine inlet filter area, and switchgear room. Pull stations are located in buildings as required by Code.
Combustion Turbine	A Carbon Dioxide (CO2) System per General Electric standards is provided for each combustion turbine.
Water Treatment Area	An automatic wet pipe sprinkler system (Refer to note in Building Section), portable “BC”-rated fire extinguishers in all areas, and hose reel stations with 100-foot hose in the area.
Outside Areas	Dry barrel-type fire hydrants are designed, installed, and located as per NFPA 24 and as required per local jurisdiction. The location of hydrants is not more than 300 feet apart in all outside areas as required by Code.

Table 2.6-1
Estimated Schedules of Construction Equipment Usage
(Page 1 of 2)

	CONSTRUCTION EQUIPMENT	Percent Usage	AVERAGE UNITS ON SITE PER MONTH																		TOTAL MONTHS
			1	2	3	4	5	6	7	8	9	10	11	12	13	14	15	16	17	18	
1	Pickup truck	75%	1	1	1	1	1	1	1	1	1	1	1	1	1	1	1	1	1	1	36
2	1-Ton Flatbed Truck	50%		1	1	1	1	1	1	1	1	1	1	2	4	4	4	4	8	8	55
3	Farm Tractor	70%																1	1	1	3
4	Forklift	50%			2	2	2	2	2	2	2	2	2	2	2	2	2	2	2	2	39
5	Fuel/Lube Truck	70%	1	1	1	1	1														5
6	Service Truck	50%	1	2	2	1	1														8
7	500-Ton Truck Crane	25%							1	1	1	1	1	1							6
8	Crawler Crane	50%				1	1	1	1	1	1	1	1	1	1	1					11
9	Hydraulic Crane (65 Ton)	65%				1	1	1	1	1	1	1	1	1	1	1	1	1	1	1	15
10	Hydraulic Crane (45 Ton)	65%				1	1	1	1	1	1	1	1	1	1	1	1	1	1		24
11	Articulating Boom Manlift	65%				1	2	2	2	2	2	2	2	2	2	2	2	2	2	2	68
12	Air Compressor	25%					1	1	1	1	1	1	1	1	1	1	1	1	1		13
13	Backhoe Loader	75%					2	2	2	2	2	2	2	2	2	2	2	2	2	1	35
14	Trencher	45%													1	1	1	1	1	1	6
15	Wheel Loader	70%	1	1	1	1										1	1	1	1		11
16	Elevating Scrapers	90%	4	6	1	2															30
17	Dump Truck (30 Ton)	75%	1	1	1	1															6
18	Crawler Excavator	85%	1	1	1	1	1	1	1	1	1	1	1								21
19	Dozer	90%			1	1															2
20	Dozer with Ripper	90%		2																	4

Table 2.6-1
Estimated Schedules of Construction Equipment Usage
(Page 2 of 2)

	CONSTRUCTION EQUIPMENT	Percent Usage	AVERAGE UNITS ON SITE PER MONTH																		TOTAL MONTHS
			1	2	3	4	5	6	7	8	9	10	11	12	13	14	15	16	17	18	
21	Vibratory Roller	90%		4	4	1	1	1	1	1	1	1	1								22
22	Walk Behind Vibratory Roller	90%					1	1	1	1	1	1	1	1	1	1					17
23	Dump Truck	35%					1	1	1	1	1	1	1	1	1	1	1	1			12
24	Motor Grader	90%			1	1	1	1	1	1	1							1	1	1	14
25	Jumping Jacks Compactors	50%			4	3	2	1	1	1	1	1	1	1	1	1	1	1	1		24
26	Vibratory Plate Compactors	50%			5	2	2	2	2	2	2	2	2	1	1	1	1	1	1		24
27	Water Truck	50%	1	3	3	2															9
28	Concrete Pumper Truck	15%						1	2	2	2	2	2	2	2	2	2	2	2		23
29	Welder	25%					2	2	2	2	2	2	2	2	2	2	2	1	1		42
30	Light Plant	30%			2	2	2	2	2	2	2	2	2	2	2	2	2				26
Total:			11	23	31	27	27	25	27	27	27	26	26	24	26	27	25	24	27	18	**611**

Table 2.6-2
Expected Construction Deliveries

Construction Duration for Project is 18 Months.				
Total Equipment Deliveries Forecasted Over 18 Month Duration:	**3,039**			
Loads Per Month Average	**169**			
	Units	**Loads Per Unit**	**Total Loads (rounded up)**	**Delivery Duration Months**
Combustion Turbines	8	40	320	4
GSU Transformers	8	2	16	5
Auxiliary Power Transformers	8	0.3	3	1
Electrical Switchgear and Cabinets	20	0.5	10	2
Switchyard Steel	5	1	5	2
Switchyard Equipment (breakers, switches, meters, Bus, Insulators)	12	1	12	4
Bus Duct 13.8 kV	8	0.5	4	2
Switchyard Breakers	13	0.5	7	4
Black Start Generator	1	1	1	1
Electrical Conduit and Wire	20	1	20	6
Electrical Lighting Equipment	3	1	3	3
General Electrical Materials	70	1	70	8
Elec. Transmission Tower and Hardware	7	2	14	1
Natural Gas Compressors and Coolers	7	1.25	9	3
SCR Module Delivery	8	10	80	4
BOP Pumps	16	0.25	4	2
BOP Equip.	20	1	20	5
Piping, Supports, and Valves	90	1	90	8
Fire Pump Skid	1	1	1	1
Structural Steel, Platforms	20	1	20	6
Administrative and Warehouse Buildings	6	6	36	5
Cooling Towers	2	12	24	2
Water Treatment Equip and Filters	1	10	10	3
Water Storage Tanks	4	12	48	5
Earthwork (Sand, Gravel)	731	1	731	8
Structural Fill (Foundations)	394	1	394	6
Concrete (Foundations)	817	1	817	7
Construction Consumables	180	1	180	15
Office Equipment and Supplies	0	0	0	0
Site Contractor Mobilization and Demobilization	20	1	20	2
General Contractor Mobilization and Demobilization	10	1	10	2
Construction Equipment Delivery and Pickup	60	1	60	15
		Total	**3,039**	

Table 2.6-3
Construction Staffing

Construction Dates	Dec. 08	Jan. 09	Feb. 09	Mar. 09	Apr. 09	May 09	June 09	July 09	Aug. 09	Sep. 09	Oct. 09	Nov. 09	Dec. 09	Jan. 10	Feb. 10	Mar. 10	Apr. 10	May 10
Months	**1**	**2**	**3**	**4**	**5**	**6**	**7**	**8**	**9**	**10**	**11**	**12**	**13**	**14**	**15**	**16**	**17**	**18**
Const. Discipline																		
Boiler Makers	0	0	2	7	9	9	7	5	6	7	7	6	4	4	4	1	1	0
Carpenters	3	3	13	44	50	50	33	18	6	6	4	2	0	0	0	0	0	0
Electricians	6	6	6	10	42	68	84	77	63	60	60	58	66	67	50	30	28	10
Iron Workers	1	2	18	67	80	85	63	47	51	65	66	53	38	33	33	6	6	0
Laborers	1	1	9	31	35	36	25	16	14	20	20	16	12	12	12	1	1	0
Pipe Fitters	0	0	0	33	66	84	94	61	61	73	67	65	60	55	31	24	27	9
Painters and Insulators	0	0	0	0	0	0	0	0	0	8	8	8	7	4	4	4	0	0
Bricklayers and Masons	0	0	0	0	0	0	2	2	2	2	0	0	0	0	0	0	0	0
Millwrights	0	0	0	1	2	2	2	2	12	26	30	29	31	34	30	7	8	2
Operator Eng.	1	12	19	10	15	16	15	10	12	17	17	14	11	10	9	1	1	0
Sheet Metal	0	0	0	0	0	0	0	0	3	3	3	0	0	0	0	0	0	0
Survey	6	2	2	1	0	0	0	0	0	0	0	0	0	0	0	0	0	0
Construction Staff	10	10	9	16	18	20	20	20	20	20	20	20	20	17	16	13	13	12
Operators (Facility)	0	0	0	0	0	0	0	0	0	0	0	8	14	14	14	14	14	14
Total	**27**	**36**	**78**	**220**	**317**	**371**	**343**	**258**	**250**	**305**	**301**	**279**	**264**	**249**	**203**	**101**	**99**	**47**

Table 2.6-4
Estimated Disturbed Area Summary

Project Component	Construction (acres)	Operations (acres)	Proposed Length (feet)	Construction Right of Way (feet)	Operations Right of Way (feet)
Site Boundary (Including Entrance Road)	36.8	36.8	N/A	N/A	N/A
Construction Laydown/Parking	13.6	13.6[1]	N/A	N/A	N/A
Transmission Interconnection Line	5.6	1.9	3,246	75	25
Gas Supply Line	23.4	6.2	13,591	75	20[2]
Potable Water Supply Line and Access Road	5.6	1.9	3,233	75	25
Total Disturbed Area	**85**	**60.4**			

Note:
Refer to Figure 2.3-1 for location of project components.

[1] The construction laydown area will remain graveled after project construction to facilitate the existing use of this area for equipment laydown for the adjacent wind farm.

[2] Consistent with the SoCalGas 20-foot easement existing from Indigo Energy Facility to Dillon Road

Table 2.6-5 Operations Staffing		
Job Title	**Number**	**Job Type**
Plant Manager	1	Full-Time
Plant Administrator	1	Full-Time
Plant Technician	8	Full-Time
Plant Technician	4	Part-Time

Table 2.6-6 Expected Operations Deliveries and Pick-Ups	
Delivery Type	**Number and Occurrence of Trucks**
Aqueous ammonia	8 per month (average 2/wk with peak 5/wk during extended summer run)
Sulfuric acid	2 per month
Cleaning chemicals	1 per month
Trash pickup	1 per week
Lubricating oil	4 per year
Lubricating oil filters	4 per year
Laboratory analysis waste	4 per year
Oily rags	4 per year
Oil absorbents	4 per year
Water treatment chemicals	Up to 4 per week

Table 2.9-1 Plant Performance Summary			
Scenario	**Hours Per Year**	**Net Electrical MW–hrs/year**	**Fuel Consumption MMBtu/yr, LHV**
Expected 15 percent Dispatch	1,314	981,721	8,065,232
34 percent Capacity Factor 1 for Comparison	2,978	2,225,234	18,281,400

Table 2.10-1
Project Facility Design Laws, Ordinances, Regulations, and Standards and Compliance
(Page 1 of 7)

Engineering Activity	Laws, Ordinances, Regulations, and Standards	Administering Agency	Applicability/Compliance	AFC Section
Federal				
Engineering Geology	Occupational Safety and Health Act, 29 United States Code (USC) §651 et seq.; 29 Code of Federal Regulations (CFR) §§1901.1-1910, 1500, 29 CFR, Part 1926	Federal Occupational Safety and Health Administration (OSHA); Cal OSHA (per 29 CFR §1952.70-1952.175)	Specific occupational safety and health standards. CPV Sentinel will meet all standards.	Appendix B: Foundations and Civil Engineering Design; Appendix C: Structural and Seismic Engineering Design Criteria; Section 7.7: Worker Safety
Engineering Geology	Clean Water Act (CWA), 33 USC §1342 et seq.	Regional Water Quality Control Board (RWQCB)	Requires permits for specified discharges into waters of the United States. CPV Sentinel will provide notice of intent to RWQCB to operate under and will comply with all General Industrial Activity Storm Water Permit requirements.	Appendices B and C; Section 7.14: Water Resources
State				
Engineering Geology	Business and Professions Code §6700 et seq.; 6730, 6736	Board of Professional Engineers and Land Surveyors	Requires state registration to practice as a civil or structural engineer in California and that all plans, specifications, reports, or documents be prepared by or under the direction of a registered engineer. CPV Sentinel will comply with all requirements.	Appendices B and C; Section 7.15: Geologic Hazards and Resources
Engineering Geology	California Occupational Safety and Health Act, Labor Code §6500 et seq.	California Occupational Safety and Health Administration (Cal OSHA)	Requires a permit for construction of trenches or excavation 5 feet or deeper into which personnel have to descend.	Appendices B and C; Section 7.7: Worker Safety

Table 2.10-1
Project Facility Design Laws, Ordinances, Regulations, and Standards and Compliance
(Page 2 of 7)

Engineering Activity	Laws, Ordinances, Regulations, and Standards	Administering Agency	Applicability/Compliance	AFC Section
Engineering Geology	California Building Code (CBC) (latest edition available)	CEC	Sets building standards and requirements. CPV Sentinel will comply with all CBC requirements.	Appendices B and C; Section 7.15: Geologic Hazards and Resources
Engineering Geology	Labor Code §6300 et seq.; 8 CCR 1500 et seq.; 2300 et seq., §3200 et seq.	Cal OSHA	Prescribes construction safety orders, industrial safety orders and work safety requirements. CPV Sentinel will comply with all safety requirements.	Appendices B and C; Section 7.7: Worker Safety
Engineering Geology	Vehicle Code §35780 et seq.	California Department of Transportation (Caltrans)	Requires a permit for transportation of oversize or overweight vehicles over state highways. CPV Sentinel will obtain all necessary permits.	Section 7.10: Traffic and Transportation
Local				
Engineering Geology	Code of Building Regulations	Riverside County Department of Building	Sets building standards and requirements for Riverside County.	Appendices B and C; Section 7.15: Geologic Hazards and Resources
Engineering Geology	Hydrology Manual	Riverside County Department of Building	Specifies drainage and grading requirements. CPV Sentinel will comply with all drainage and grading requirements.	Appendices B and C; Section 7.15: Geologic Hazards and Resources
Federal				
Civil and Structural Engineering	29 USC §651 et seq.; 29 CFR §§1901.1-1910, 1500; 29 CFR, Part 1926.	OSHA; Cal OSHA (per 29 CFR §§1952.70-1952.175)	Specific occupational safety and health standards. CPV Sentinel will meet all standards.	Appendices C and D; Section 7.7: Worker Safety

Table 2.10-1
Project Facility Design Laws, Ordinances, Regulations, and Standards and Compliance
(Page 3 of 7)

Engineering Activity	Laws, Ordinances, Regulations, and Standards	Administering Agency	Applicability/Compliance	AFC Section
Civil and Structural Engineering	33 USC §1342 et seq.	RWQCB	Requires permits for specified discharges into waters of the United States. CPV Sentinel will provide notice of intent to RWQCB to operate under and will comply with all General Industrial Activity Storm Water Permit requirements.	Section 7.14: Water Resources
State				
Civil and Structural Engineering	Business and Professions Code §6700 et seq.; §§6730, 6736	Board for Professional Engineers and Land Surveyors	Requires state registration to practice as a civil or structural engineer in California and that all plans, specifications, reports, or documents be prepared by or under the direction of a registered engineer. CPV Sentinel will comply with all requirements.	Appendices B and C
Civil and Structural Engineering	Labor Code §6500 et seq.	Cal OSHA	Requires a permit for construction of trenches or excavation 5 feet or deeper into which personnel have to descend.	Appendices B and C; Section 7.7: Worker Safety
Civil and Structural Engineering	California Building Code (CBC)	CEC	Sets building standards and requirements. CPV Sentinel will comply with all CBC requirements.	Appendices B and C; Section 7.7: Worker Safety

Table 2.10-1
Project Facility Design Laws, Ordinances, Regulations, and Standards and Compliance
(Page 4 of 7)

Engineering Activity	Laws, Ordinances, Regulations, and Standards	Administering Agency	Applicability/Compliance	AFC Section
Civil and Structural Engineering	Labor Code §6300 et seq.; 8 CCR 1500 et seq.; 2300 et seq.; §3200 et seq.	Cal OSHA	Prescribes construction safety orders, industrial safety orders and work safety requirements. CPV Sentinel will comply with all safety requirements.	Appendices B and C; Section 7.7: Worker Safety
Civil and Structural Engineering	Vehicle Code §35780 et seq.	Caltrans	Requires a permit for transportation of oversize or overweight vehicles over state highways. CPV Sentinel will obtain all necessary permits.	Section 7.10: Traffic and Transportation
Civil and Structural Engineering	49 CFR Part 192	Federal OSHA and Cal OSHA	Code of Federal Regulation 49 Part 192 – Transportation of Natural and Other Gas by Pipeline: Minimum Federal Safety Standards. CPV Sentinel will comply with standards	Appendices B and C; Chapter 6
State				
Civil and Structural Engineering	California Public Utility Commission (CPUC) general Order 112E	CPUC	Requires a proposed installation report and construction and safety standards. CPV Sentinel will comply with CPUC regulations and standards.	Appendices B and C, Chapter 6
Local				
Civil and Structural Engineering	Code of Building Regulations	Riverside County Department of Building	Sets building standards and requirements for Riverside County.	Appendices B and C; Section 7.15: Geologic Hazards and Resources

Table 2.10-1
Project Facility Design Laws, Ordinances, Regulations, and Standards and Compliance
(Page 5 of 7)

Engineering Activity	Laws, Ordinances, Regulations, and Standards	Administering Agency	Applicability/Compliance	AFC Section
Civil and Structural Engineering	Hydrology Manual	Riverside County Department of Building	Specifies drainage and grading requirements. CPV Sentinel will comply with all drainage and grading requirements.	Appendices B and C; Section 7.15: Geologic Hazards and Resources
Federal				
Mechanical Engineering	29 USC §651 et seq.; 29 CFR §§1901.1-1910, 1500; 29 CFR, Part 1926.	Federal OSHA; Cal OSHA (per 29 CFR §§1952.70-1952.175)	Specific occupational safety and health standards. CPV Sentinel will meet all standards.	Appendices D and E; Section 7.7: Worker Safety
State				
Mechanical Engineering	CBC, California Plumbing Code	CEC	Sets building standards and requirements. CPV Sentinel will comply with all CBC requirements.	Appendices D and E; Section 7.15: Geologic Hazards and Resources
Mechanical Engineering	Labor Code §6500 et seq.; 8 CCR 1500 et seq.; 2300 et seq.; §3200 et seq.	Cal OSHA	Prescribes construction safety orders, industrial safety orders and work safety requirements. CPV Sentinel will comply with all safety requirements.	Appendices D and E; Section 7.7: Worker Safety
Mechanical Engineering	8 CCR Chapters 4-7	CEC	Prescribes requirements for flammable liquids, gases, and vapors. CPV Sentinel will comply with all requirements.	Appendices D and E; Section 7.12: Hazardous Materials Handling
Mechanical Engineering	Business and Professions Code §6700 et seq., 6730, 6735 and 6736	Board of Professional Engineers and Land Surveyors	Requires state registration to practice as a mechanical engineer and that all plans, specifications, reports, or documents be prepared by a registered engineer. CPV Sentinel will use registered engineers.	Appendices D and E

Table 2.10-1
Project Facility Design Laws, Ordinances, Regulations, and Standards and Compliance
(Page 6 of 7)

Engineering Activity	Laws, Ordinances, Regulations, and Standards	Administering Agency	Applicability/Compliance	AFC Section
Federal				
Electrical Engineering	29 USC §651 et seq.; 29 CFR §§1901.1-1910, 1500, 29 CFR, Part 1926	Federal OSHA; Cal OSHA (per 29 CFR §§1952.70-1952.175)	Specific occupational safety and health standards. CPV Sentinel will meet all standards.	Appendices E and F; Section 7.7: Worker Safety
State				
Electrical Engineering	CBC, California Electrical Code	CEC	Sets building standards and requirements. CPV Sentinel will comply with all CBC requirements.	Appendices E and F; Section 7.15: Geologic Hazards and Resources
Electrical Engineering	Labor Code §6500 et seq.; 8 CCR 1500 et seq.; 2300 et seq.; §3200 et seq.	Cal OSHA	Prescribes construction safety orders, industrial safety orders and work safety requirements. CPV Sentinel will comply with all safety requirements.	Appendices E and F; Section 7.7: Worker Safety
Electrical Engineering	8 CCR Chapters 4-7	CEC	Prescribes requirements for flammable liquids, gases, and vapors. CPV Sentinel will comply with all requirements.	Appendices E and F; Section 7.12: Hazardous Materials Handling
Electrical Engineering	Business and Professions Code §6700 et seq., 6730, 6735 and 6736	Board of Professional Engineers and Land Surveyors	Requires state registration to practice as an electrical engineer and also requires all plans, specifications, reports, or documents be prepared by a registered engineer. CPV Sentinel will use registered engineers.	Appendices E and F

Table 2.10-1
Project Facility Design Laws, Ordinances, Regulations, and Standards and Compliance
(Page 7 of 7)

Engineering Activity	Laws, Ordinances, Regulations, and Standards	Administering Agency	Applicability/Compliance	AFC Section
Local				
Electrical Engineering	Code of Building Regulations	Riverside County Department of Building	Sets building standards and requirements for Riverside County.	Appendices E and F; Section 7.15: Geologic Hazards and Resources
Power Plant Reliability	EPRI, NERC		EPRI and NERC trade association standards will be followed	Appendix F; Section 3.8: Safety and Reliability
Federal				
Public Health/Worker Safety Protection	OSHA, 29 USC §651 et seq.; 29 CFR 1910 et seq.; and 29 CFR 1926 et seq.	Federal OSHA and Cal OSHA	Project will meet employee health and safety standards for employer-employee communications, electrical operations, and chemical exposures.	Section 7.7: Worker Safety
Public Health/Worker Safety Protection	Department of Labor, Safety and Health Regulations for Construction promulgated under Section 333 of the Contract Work Hours and Safety Standards Act, 40 USC 327 et seq.	Federal OSHA and Cal OSHA	Project will meet employee health and safety standards for construction activities. Requirements addressed by CCR Title 8, General Construction Safety Orders.	Section 7.7: Worker Safety

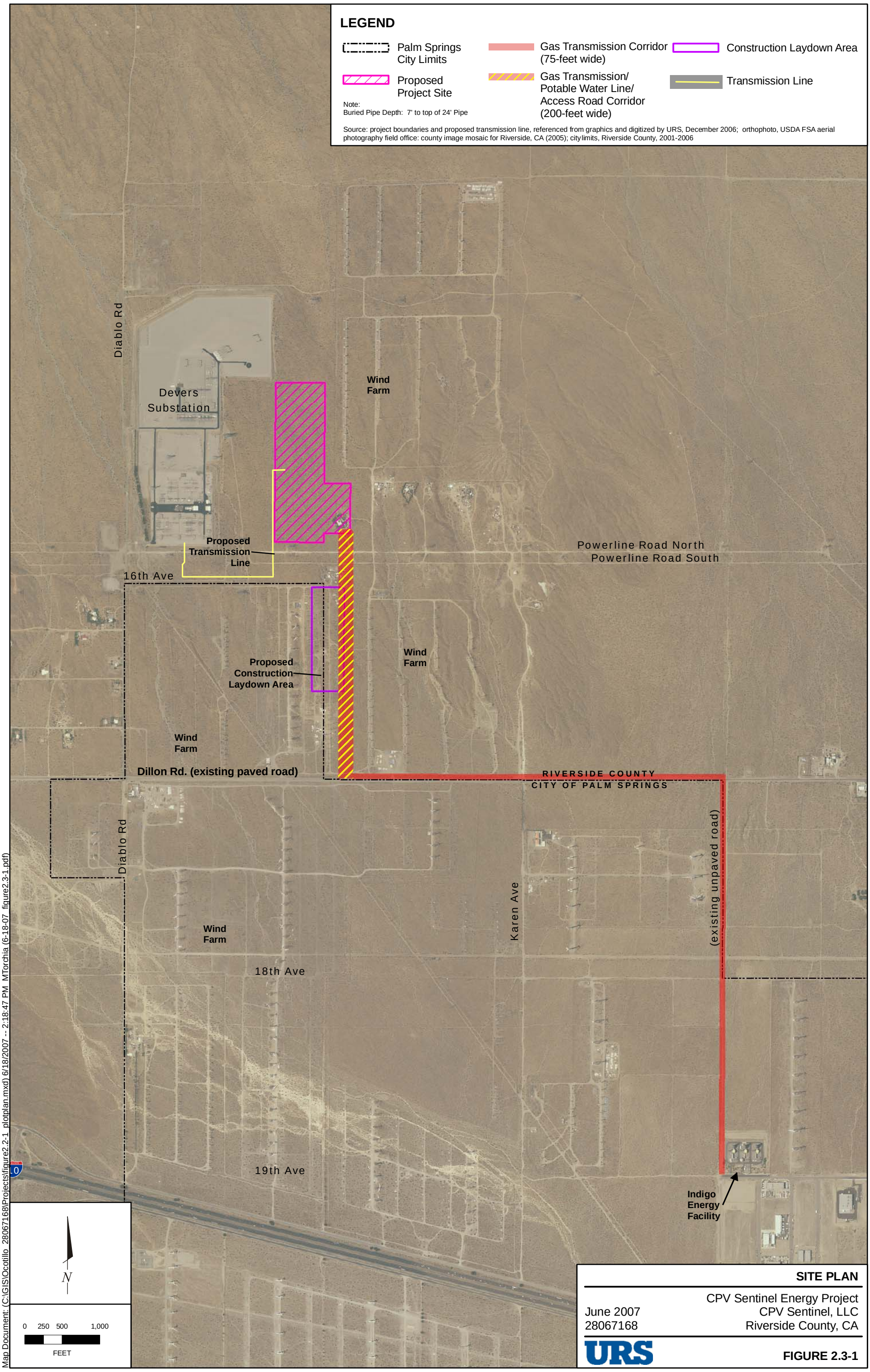

Map Document: (C:\GIS\Ocotillo_28067168\Projects\figure2.2-1_plotplan.mxd) 6/18/2007 -- 2:18:47 PM MTorchia (6-18-07 figure2.3-1.pdf)

6/18/07 vsa ..T:\CPV Sentinel (Ocotillo)\2.0 Facility Description\2.3-1_siteplan.ai

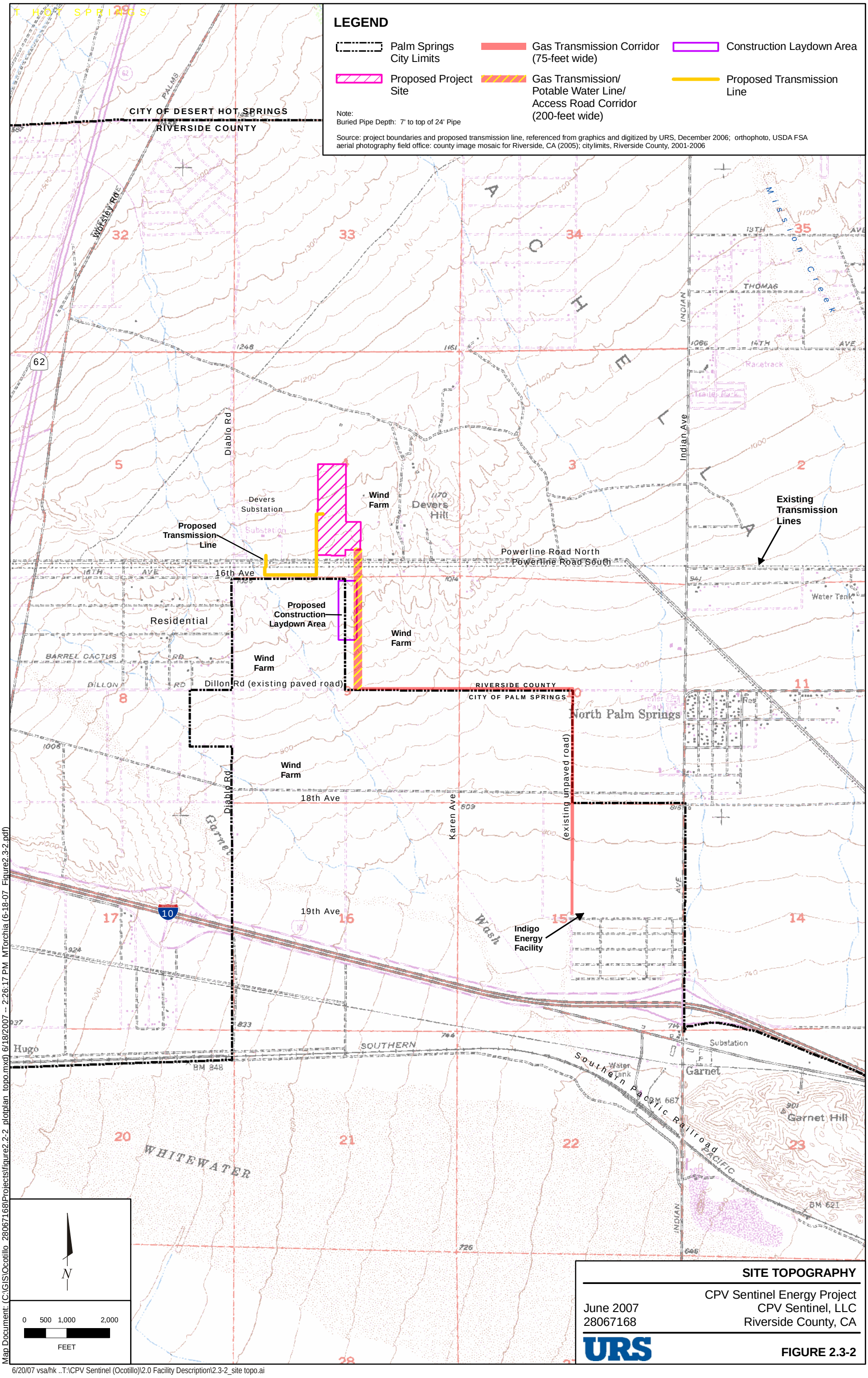

SITE TOPOGRAPHY

CPV Sentinel Energy Project
CPV Sentinel, LLC
Riverside County, CA

June 2007
28067168

URS

FIGURE 2.3-2

Map Document: (C:\GIS\Ocotillo_28067168\Projects\figure2.2-2_plotplan_topo.mxd) 6/18/2007 -- 2:26:17 PM MTorchia (6-18-07_Figure2.3-2.pdf)

6/20/07 vsa/hk ..T:\CPV Sentinel (Ocotillo)\2.0 Facility Description\2.3-2_site topo.ai

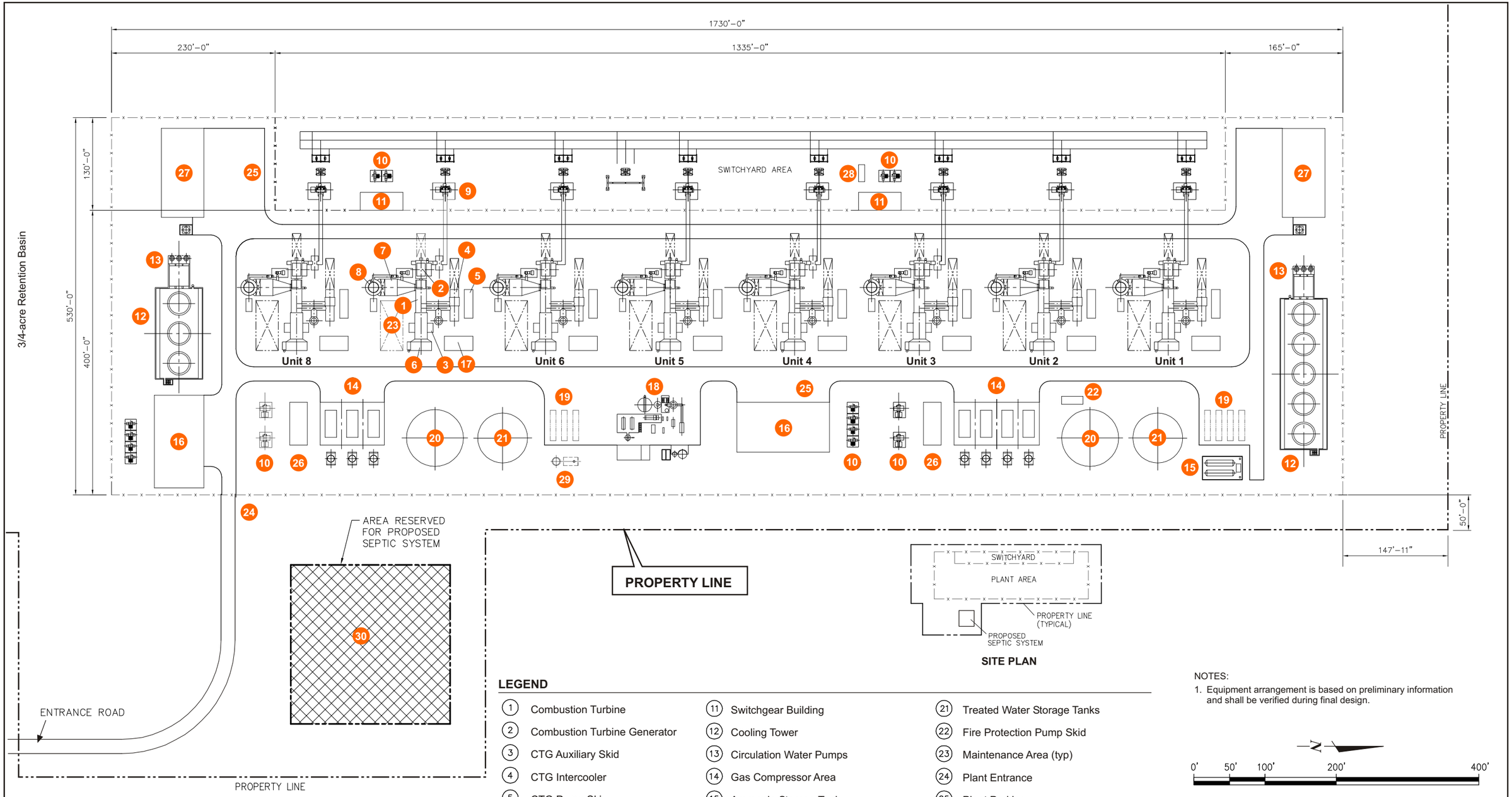

LEGEND

1. Combustion Turbine
2. Combustion Turbine Generator
3. CTG Auxiliary Skid
4. CTG Intercooler
5. CTG Pump Ski
6. CTG Inlet Air Filter
7. SCR
8. Exhaust Stack
9. GSU Transformer
10. Auxiliary Power Transformers
11. Switchgear Building
12. Cooling Tower
13. Circulation Water Pumps
14. Gas Compressor Area
15. Ammonia Storage Tank
16. Operations Building
17. Unit Control/Electrical Room
18. Water & Wastewater Treatment Area
19. Water Treatment Trailer Parking
20. Raw Water Storage Tanks
21. Treated Water Storage Tanks
22. Fire Protection Pump Skid
23. Maintenance Area (typ)
24. Plant Entrance
25. Plant Parking
26. MCC Building
27. Cooling Tower Building/Warehouse
28. Black Start Generator
29. Oil/Water Separator & Drain Sump
30. Proposed Location of Septic System

NOTES:

1. Equipment arrangement is based on preliminary information and shall be verified during final design.

Source:
Spectrum Energy, Inc.
Equipment Arrangement Plan (CPV_M-EA-002) Rev. C, 5/17/07,
and Area for Proposed Septic Tank (CPV_C-SK-003) Rev. A, 5/01/07.

PLOT PLAN

CPV Sentinel Energy Project
CPV Sentinel, LLC
Riverside County, California

June 2007
28067168

URS

FIGURE 2.4-1

6/20/07 vsa ..\CPV Sentinel (Ocotillo)\2.0 Facility Description\2.4-1_plotplan.cdr

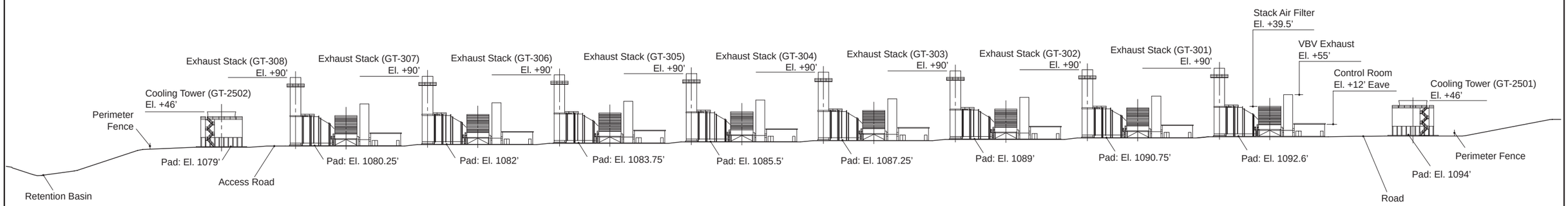

ELEVATION LOOKING WEST

NOTES:

1. Equipment arrangement is based on preliminary information and shall be verified during final design.
2. Equipment elevations shown are based on best available information and shall be verified during final design.
3. Equipment elevations noted are heights above finished pads. See project grading plan for finished pad elevations not shown on this sheet.

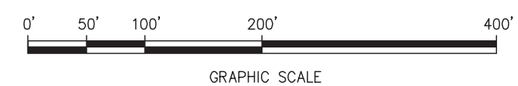

Source:
Spectrum Energy, Inc.
Equipment Arrangement Elevations (CPV_M-EA-102)
Rev. C, 5/04/07

ELEVATION LOOKING WEST

CPV Sentinel Energy Project
CPV Sentinel, LLC
Riverside County, California

June 2007
28067168

URS

FIGURE 2.4-2

6/12/07 vsa/hk ..\T:\CPV Sentinel (Ocotillo)\2.0 Facility Description\2.4-2_elev west.ai

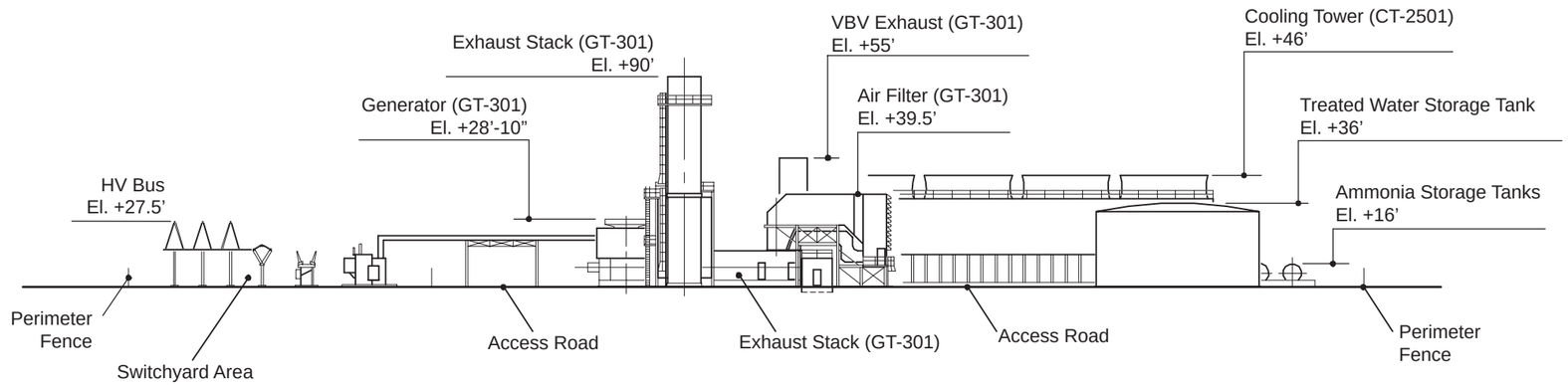

ELEVATION AT EXHAUST STACK GT-301 LOOKING NORTH

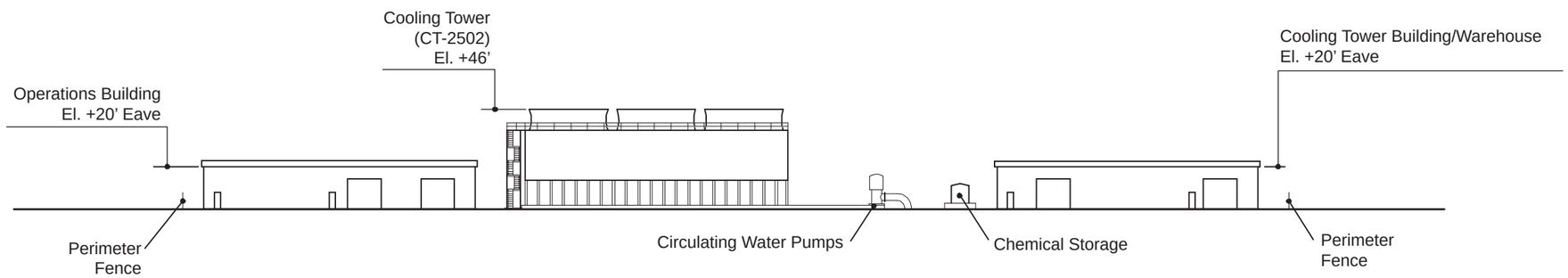

ELEVATION AT COOLING TOWER CT-2502 LOOKING SOUTH

NOTES:

1. Equipment arrangement is based on preliminary information and shall be verified during final design.
2. Equipment elevations shown are based on best available information and shall be verified during final design.
3. Equipment elevations noted are heights above finished pads. See project grading plan for finished pad elevations not shown on this sheet.

Source:
Spectrum Energy, Inc.
Equipment Arrangement Elevations (CPV_M-EA-102)
Rev. C, 5/04/07

0 50 100
Scale in Feet

ELEVATIONS LOOKING NORTH AND SOUTH

CPV Sentinel Energy Project
June 2007 CPV Sentinel, LLC
28067168 Riverside County, California

URS

FIGURE 2.4-3

6/12/07 vsa/hk ..\T:\CPV Sentinel (Ocotillo)\2.0 Facility Description\2.4-3_elevs_N-S.ai

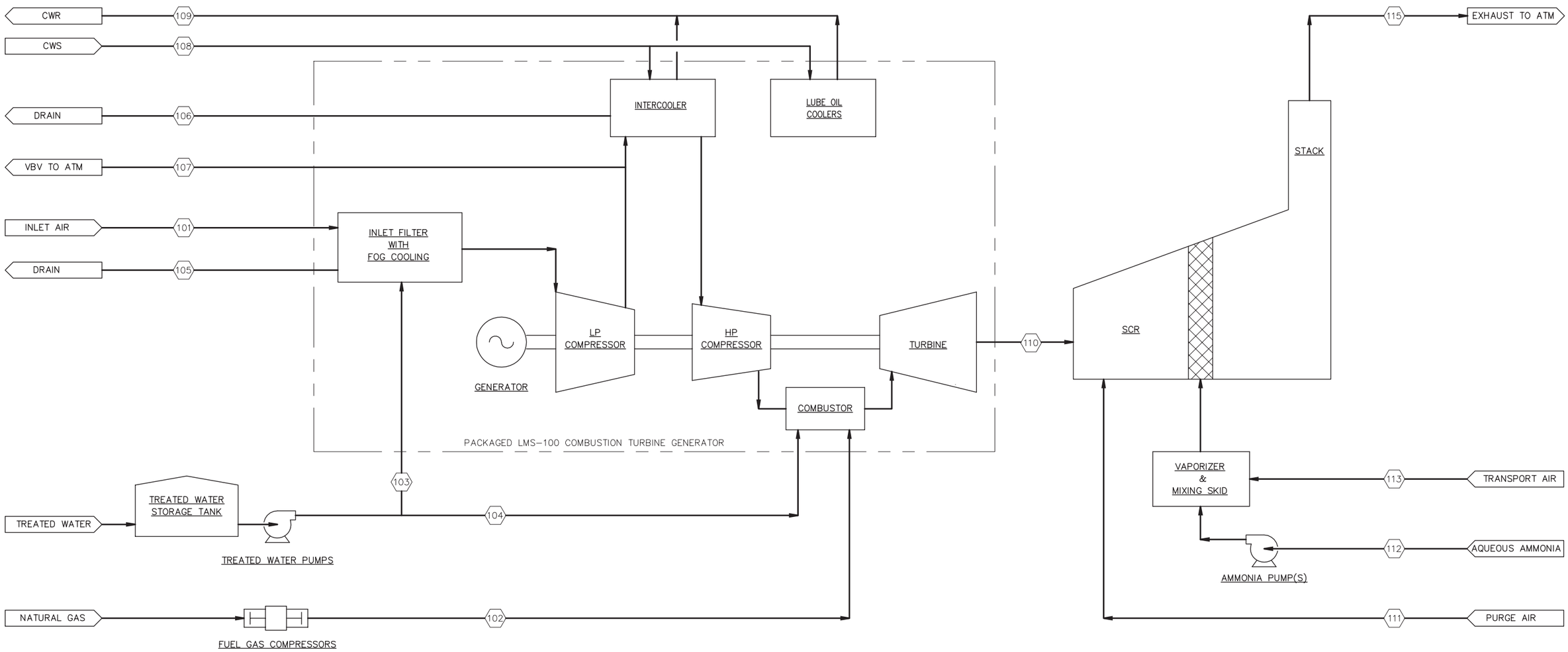

Refer to Table 2.4-3

Source:
Spectrum Energy, Inc.
Heat & Mass Balance Diagram (CPV_M-HMB-001-1)
Rev. A, 4/26/07

HEAT AND MASS BALANCE DIAGRAM

CPV Sentinel Energy Project
CPV Sentinel, LLC
Riverside County, California

June 2007
28067168

URS

FIGURE 2.4-4

6/12/07 vsa/hk ..\T:\CPV Sentinel (Ocotillo)\2.0 Facility Description\2.4-4_heat-mass balance.ai

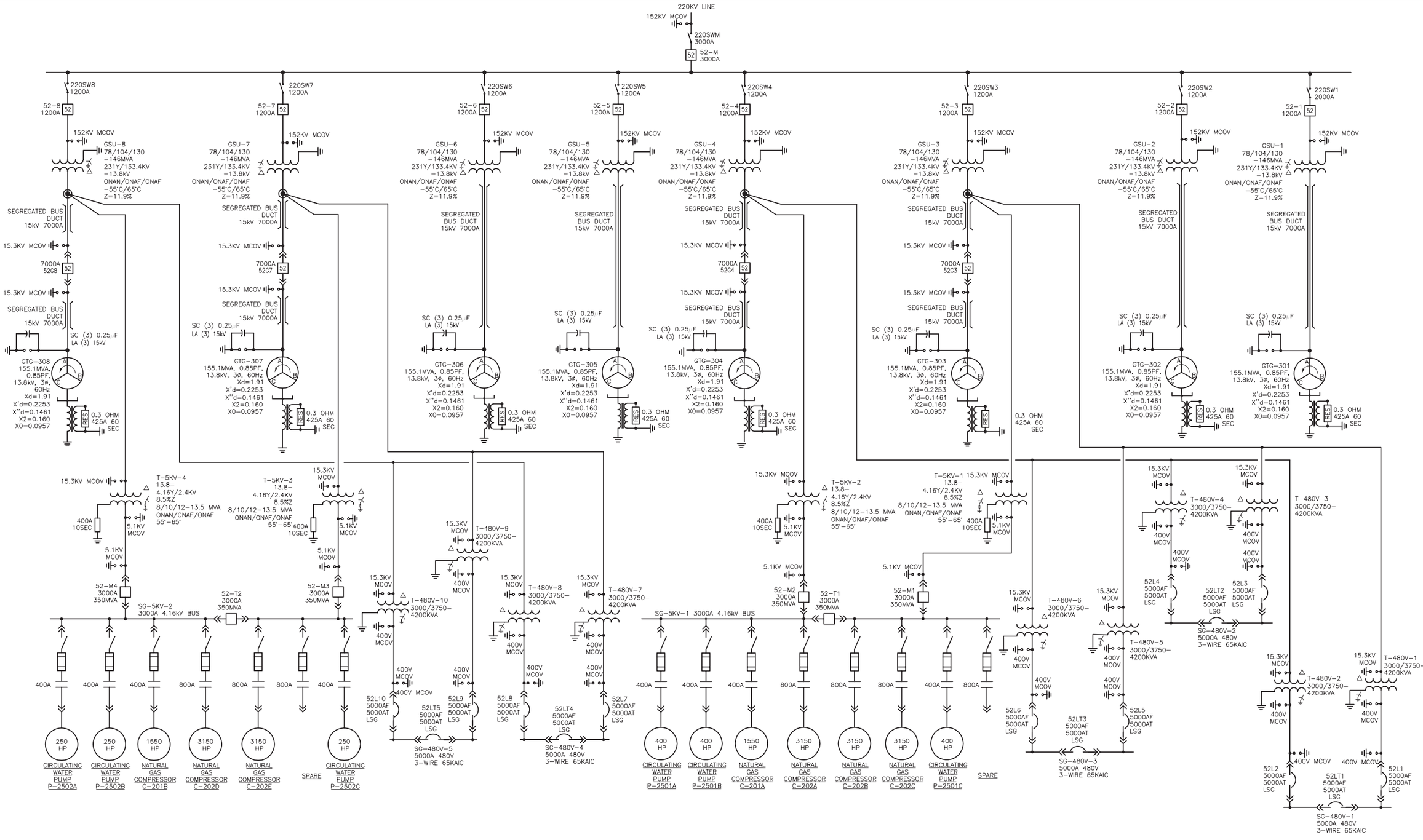

Source:
Spectrum Energy, Inc.
Overall One-Line Diagram (CPV_E-SL-100-01)
Rev. A, 5/07/07

OVERALL ONE-LINE DIAGRAM

CPV Sentinel Energy Project
CPV Sentinel, LLC
Riverside County, California

June 2007
28067168

URS

FIGURE 2.4-5

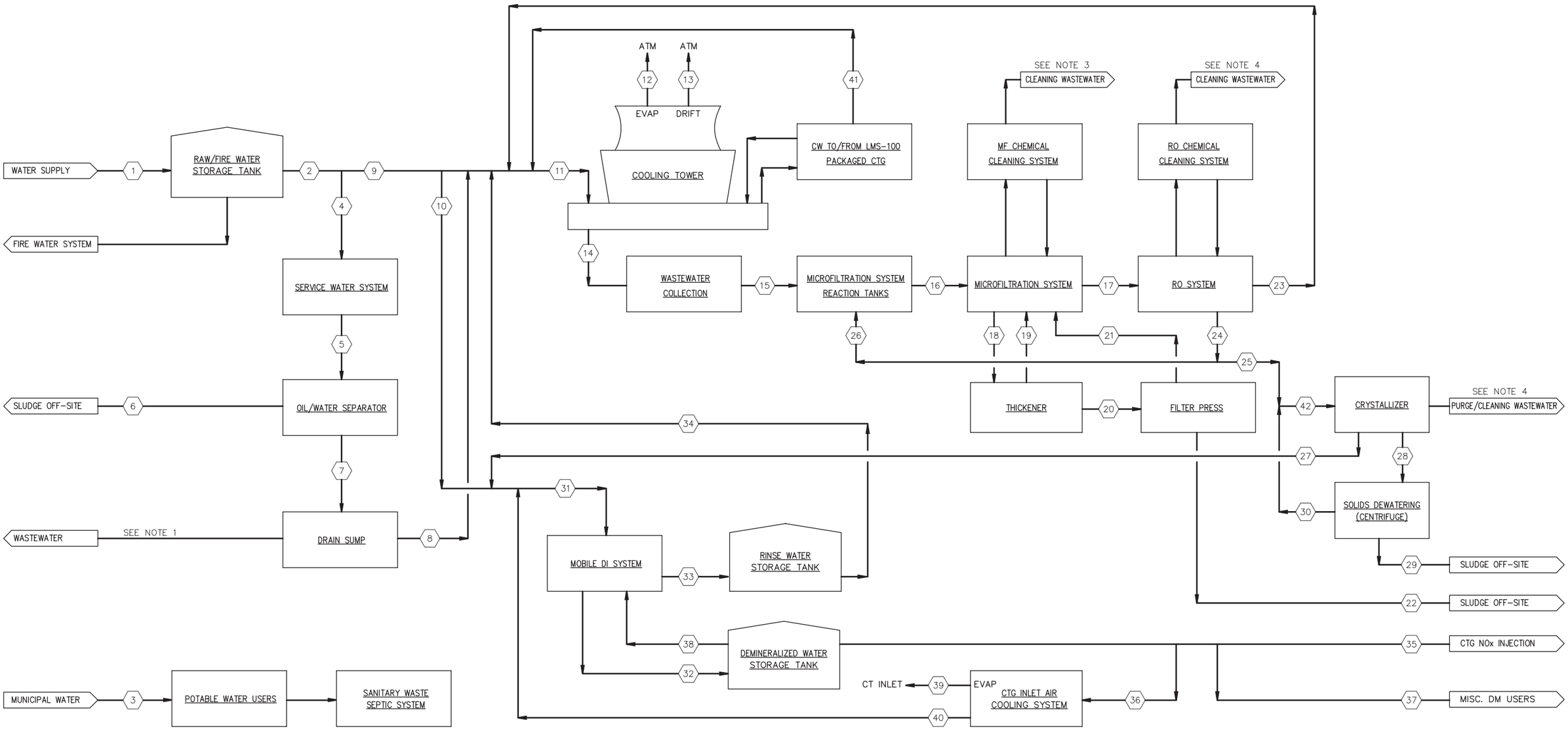

NOTES:

1. Alternate line to wastewater collection or emergency storage may be used.
2. Stormwater collection not shown.
3. To be recovered in the microfiltration system.
4. To offsite disposal.

Refer to Table 2.4-4

Source:
Spectrum Energy, Inc.
Water Balance Diagram (CPV_M-WMB-001-1)
Rev. A, 4/26/07

WATER BALANCE DIAGRAM

CPV Sentinel Energy Project
CPV Sentinel, LLC
Riverside County, California

June 2007
28067168

URS

FIGURE 2.4-6

6/12/07 vsa/hk ..\T:\CPV Sentinel (Ocotillo)\2.0 Facility Description\2.4-6_water balance.ai

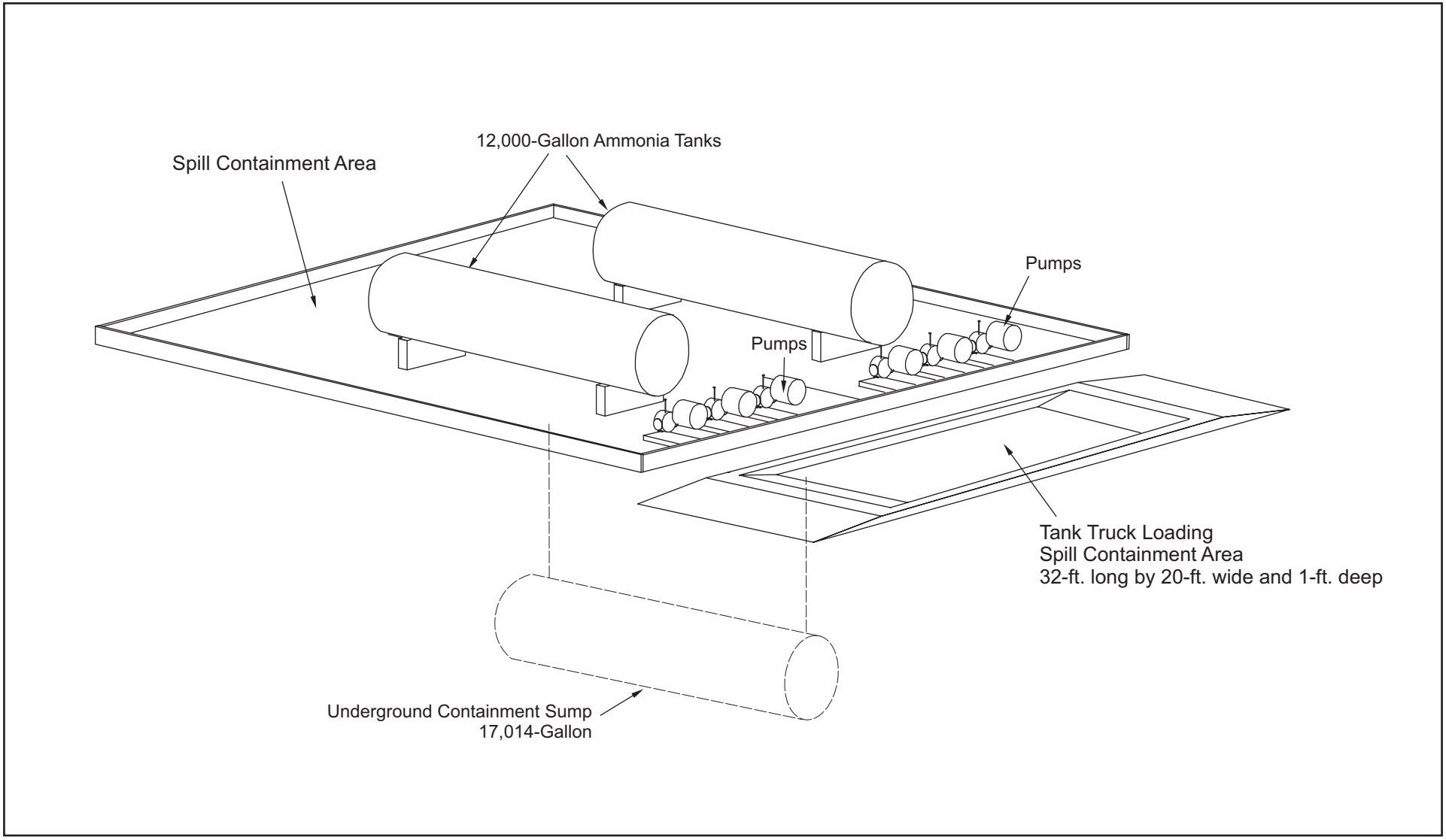

AQUEOUS AMMONIA STORAGE AND SPILL CONTAINMENT

CPV Sentinel Energy Project
CPV Sentinel, LLC
Riverside County, California

June 2007
28067168

URS

FIGURE 2.4-7

6/20/07 vsa/hk ..T:\CPV Sentinel (Ocotillo)\2.0 Facility Description\2.4-7_ammonia storage.cdr

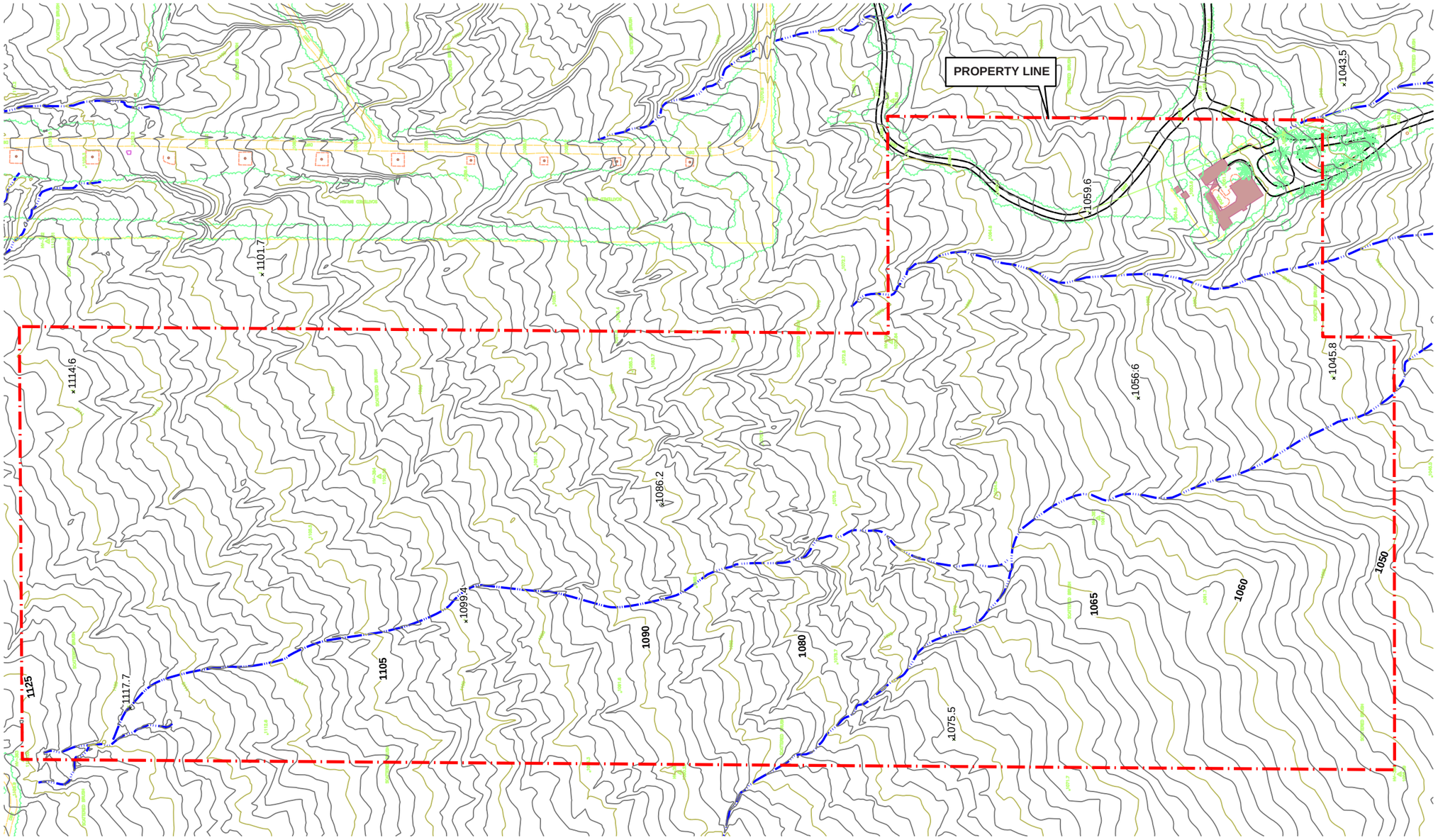

LEGEND

- Property Line
- Drainage
- Wind Turbine

N

0 100 200

Scale in Feet

Source:
Spectrum Energy, Inc.
Power Plant Topography (Etopo.dwg), 04/11/07

PRE-CONSTRUCTION DRAINAGE

CPV Sentinel Energy Project
CPV Sentinel, LLC
Riverside County, California

June 2007
28067168

URS

FIGURE 2.5-1

6/18/07 vsa..\T:\CPV Sentinel (Ocotillo)\2.0 Facility Description\2.5-1_preconstruction.ai

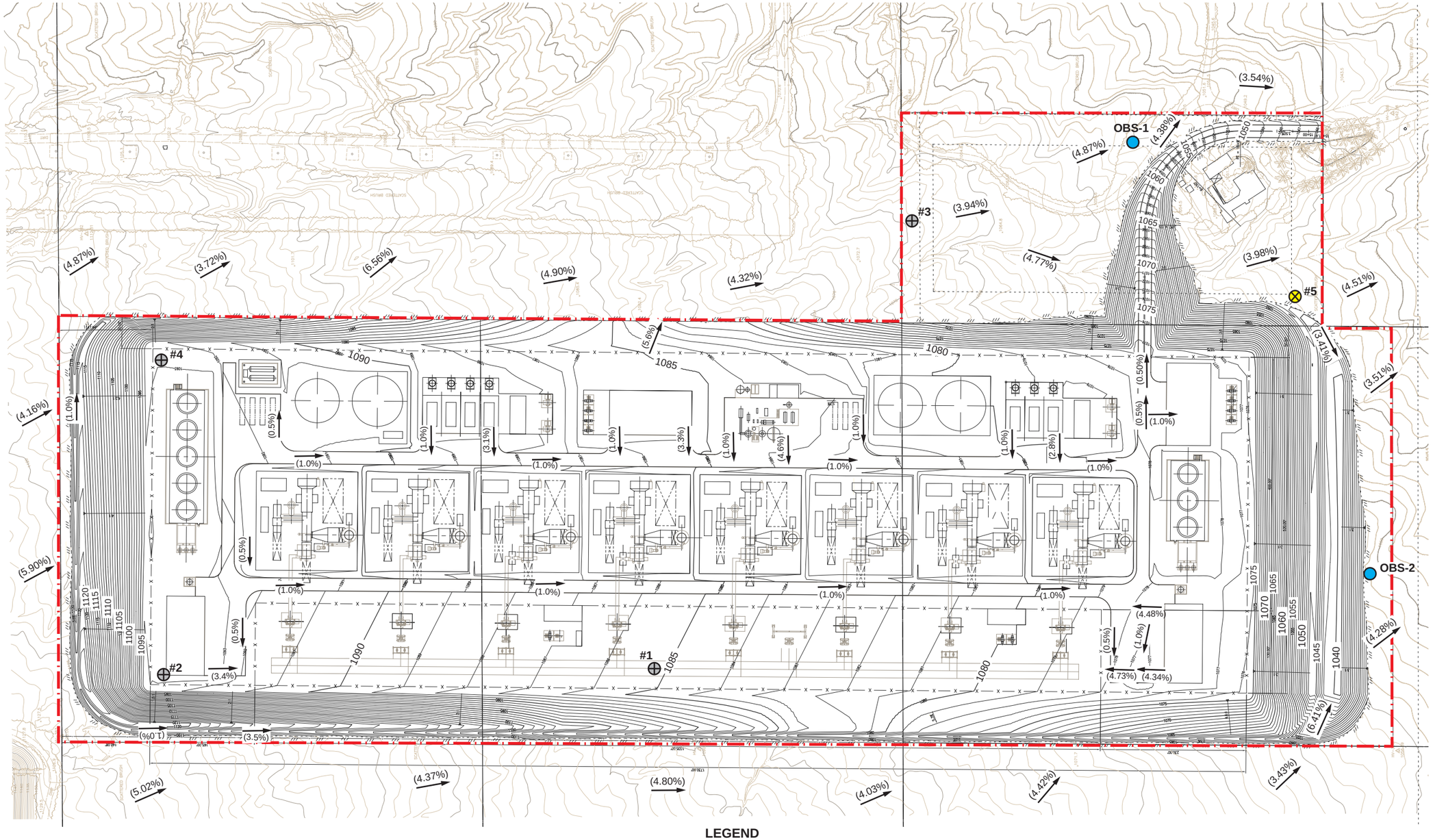

LEGEND

Property Line

TEST WELL PROGRAM

Proposed Test Pumping Well

Proposed Permanent Well

Observation Well

N

0 100 200

Scale in Feet

Source:
Stantec Consulting, Inc.
Power Plant Conceptual Grading Plan
(EX1053_SITE-GRADING.dwg), 04/11/07

Well Locations tentative; to be confirmed after the test well program

GRADING PLAN AND POST-CONSTRUCTION DRAINAGE

CPV Sentinel Energy Project
CPV Sentinel, LLC
Riverside County, California

June 2007
28067168

URS

FIGURE 2.5-2

6/20/07 vsa/hk ..\T:\CPV Sentinel (Ocotillo)\2.0 Facility Description\2.5-2_grading.ai

Description	Original Duration	Early Start	Early Finish
Development / Engineering			
Preliminary Eng. / Development	280	02JAN07 A	03JAN08
CEC Application Submittal / Approval	303	31MAY07	01AUG08
Project Design Engineering Construction	520	04JAN08	07JAN10
Air Permit	0		01SEP08
GE LMS Notice To Proceed	0		01SEP08
Receive (All Other) Required Permits	0		01SEP08
Mobilization & Temporary Facilities			
Construction Mobilize BOP Contractor	12	01DEC08	16DEC08
Site Survey & Layout	12	17DEC08	05JAN09
Sitework			
Clear Grub Site	16	06JAN09	27JAN09
Topsoil Removal/Stock Pile	12	28JAN09	12FEB09
Site Cut & Fill	42	13FEB09	13APR09
Equipment Delivery			
GSU- A. Delivery	320	07FEB08	04MAY09
Switchyard Breaker / Generator Breaker Delivery	250	16MAY08	05MAY09
Electrical Switchgear & Transformers	210	26JUN08	20APR09
Switchyard Steel & Bus Package Delivery	230	30JUN08	20MAY09
BOP Equipment Delivery	220	01AUG08	08JUN09
Foundations			
CTG- Foundations	210	02FEB09	20NOV09
BOP Foundations	165	13FEB09	01OCT09
Building Foundations	60	02MAR09	22MAY09
Tank Foundations	60	11MAR09	02JUN09
Switchyard Foundations	125	01APR09	22SEP09
Cooling Tower Foundations	60	22APR09	14JUL09
FGC / Building Foundations	85	30APR09	26AUG09
Underground Mechanical			
CTG- UG Piping - All Systems	225	23FEB09	05JAN10
Power Block Underground Piping	175	02MAR09	30OCT09
BOP Under Ground Piping	200	06MAR09	10DEC09
Circ. Water UG Piping	225	09MAR09	19JAN10
Fuel Gas UG Piping	155	27AUG09	02APR10
Underground Electrical			
CTG - Area Duct Banks	210	30MAR09	19JAN10
BOP Electrical Duct Banks	230	10APR09	01MAR10
Power Block Electrical Duct Banks	189	25MAY09	15FEB10
Switchyard Duct Banks	80	23SEP09	14JAN10
Equipment Erection			
Install CTG / SCR Turbine and Aux. Equipment	260	02MAR09	02MAR10
Install BOP Equipment	220	13MAR09	18JAN10
Install Switchyard Equipment	140	27MAY09	08DEC09
Install Water Treatment Systems	150	22JUN09	19JAN10
Install FGC Compressors	80	27AUG09	16DEC09
Building & Structural			
Water Tank Erection	145	03JUN09	22DEC09
Install Support Buildings	135	15JUN09	18DEC09
Install Cooling Towers	125	12AUG09	04FEB10
Above Ground Mechanical			
BOP Piping	195	24APR09	25JAN10
Power Block Piping	200	27APR09	02FEB10
CTG- Area Piping	210	27APR09	16FEB10
Circ. Water Piping	205	27APR09	09FEB10
Fuel Gas Piping FGC Units	195	08MAY09	08FEB10
CTG- Pipe Test / Flush	150	17AUG09	16MAR10
Above Ground Electrical			
BOP Equip Raceways & Cable	210	24APR09	15FEB10
CTG- Electrical Raceways & Cable	225	27APR09	09MAR10
Power Block Elect Raceways & Cable	195	08MAY09	08FEB10
Process Systems Electrical Raceways & Cable	225	08MAY09	22MAR10
Power Block / BOP Feeders	175	25MAY09	26JAN10
Switchyard Raceways & Cable	40	08JUL09	01SEP09
Electrical Switchgear Raceways & Cable	145	27JUL09	16FEB10
Water Treatment Sys Elec. Raceways & Cable	105	31AUG09	26JAN10
Commissioning & Testing			
CTG - Work Package Mech & Elect	160	17AUG09	30MAR10
Aux Power Switchgear Testing	15	02SEP09	22SEP09
BOP Hydro Test & Flush	145	11SEP09	05APR10
SWYD/SWGR Elect Testing - (SCE IN Service)	20	23SEP09	20OCT09
CTG- Turbine Oil Flush and Aux. Equip. Test	100	19OCT09	09MAR10
SCE - (Back Feed Power)	5	26OCT09	30OCT09
Fuel Gas Lateral & Metering To Site	0		02NOV09
Water Supply To Site	0		02NOV09
CTG - Startup & Commissioning	90	09NOV09	16MAR10
First Sync. - (SCE Trial Operation)	30	09NOV09	18DEC09
Fuel Gas Compressor Start-Up	40	09FEB10	05APR10
Start Up BOP Process Systems	35	16FEB10	05APR10
BOP Systems Testing / Functional	25	23MAR10	26APR10
Facility CTG / BOP Operational Testing	15	06APR10	26APR10
Target COD	0		30APR10
SCE PPA Required In-Service Date (5x)	0		30JUL10

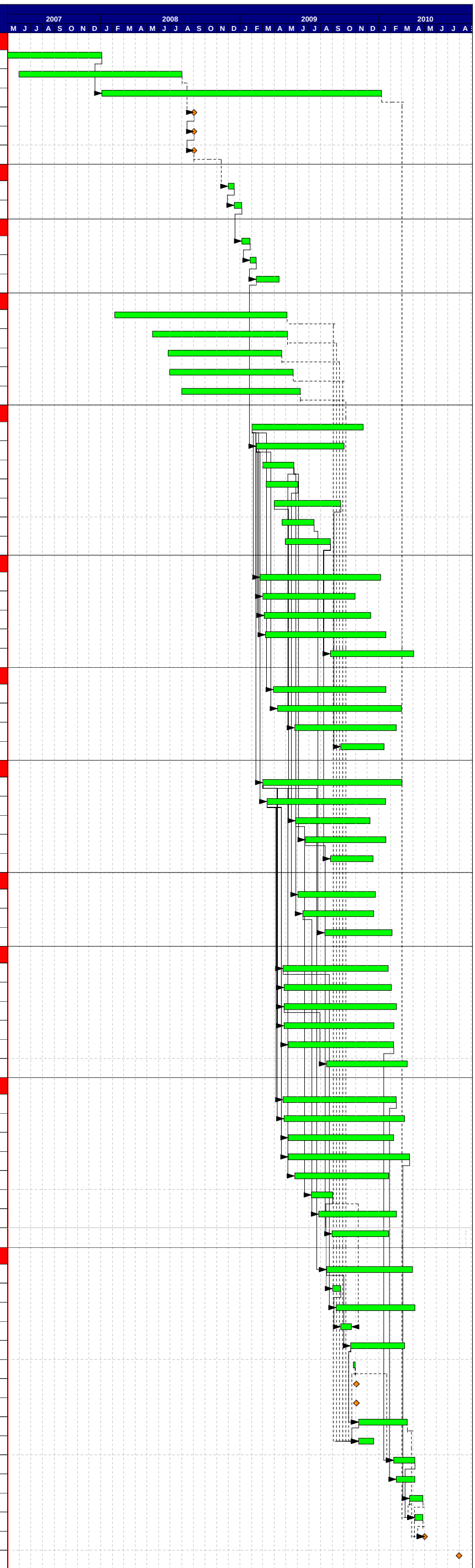

PROJECT SCHEDULE

CPV Sentinel Energy Project
CPV Sentinel, LLC
Riverside County, California

June 2007
28067168

URS

FIGURE 2.6-1

6/18/07 rk ..\T:\CPV Sentinel (Ocotillo)\2.0 Facility Description\2.6-1_schedule.ai

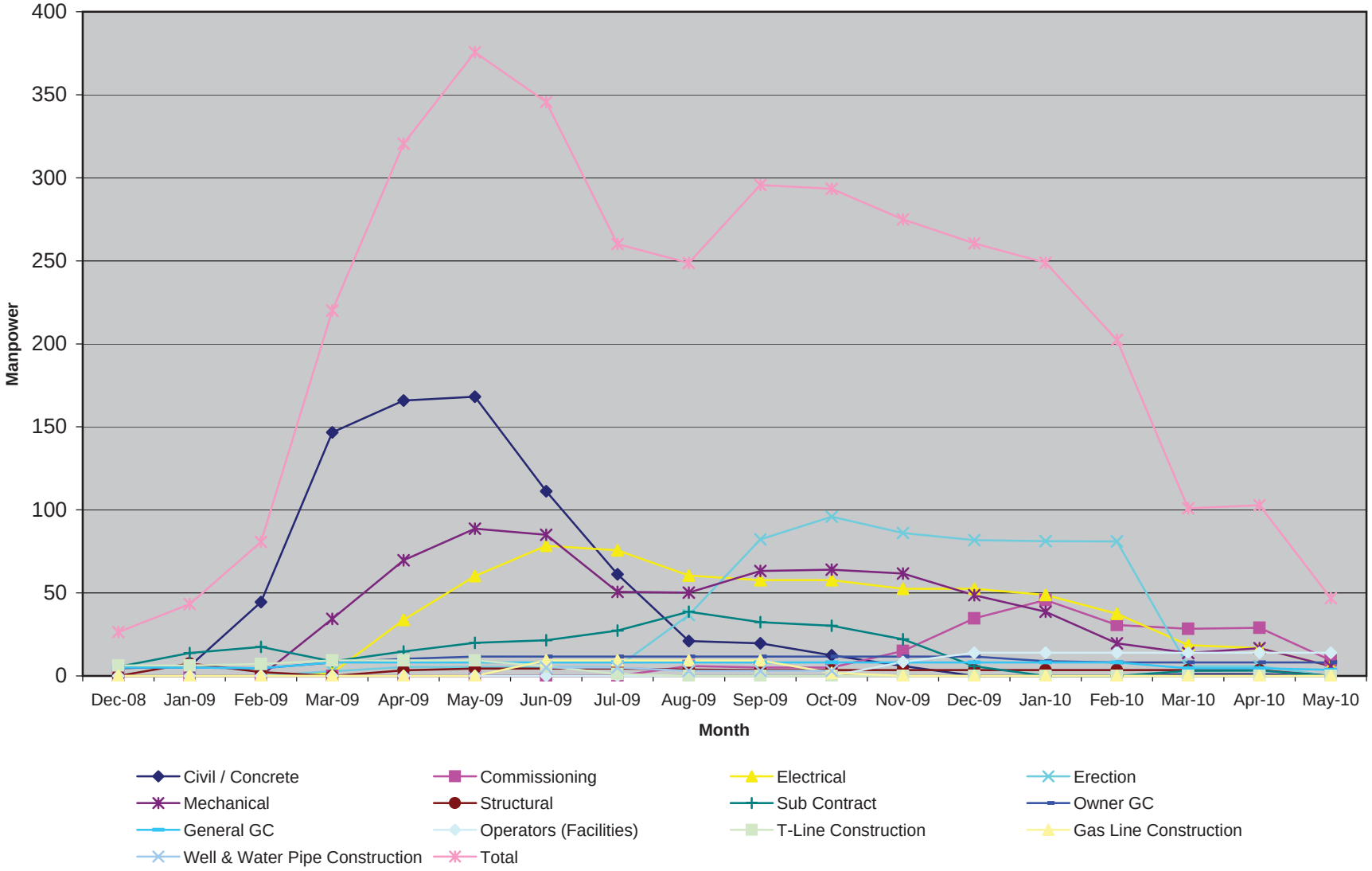

MANPOWER CURVES BY ACTIVITY

CPV Sentinel Energy Project
June 2007 CPV Sentinel, LLC
28067168 Riverside County, California

URS

FIGURE 2.6-2

6/12/07 vsa/hk ..\T:\CPV Sentinel (Ocotillo)\2.0 Facility Description\2.6-2_manpower.ai