7.11 VISUAL RESOURCES

This section considers the potential for the construction, operation, maintenance, and long-term presence of the proposed project to cause significant impacts on scenic quality, or on sensitive viewers within the visual sphere of influence (VSOI) established for the proposed project (Figure 7.11-1). This assessment was conducted in conformance with the California Energy Commission (CEC) Guidelines for preparing visual impact assessments for an Application for Certification (AFC), as described in Appendix B of Title 20, California Code of Regulations. The CEC guidelines, in turn, comply with the California Environmental Quality Act (CEQA) documentation requirements. The study methods used were based upon elements established by the U.S. Bureau of Land Management (BLM), Visual Resource Management Inventory and Contrast Rating System (VRM) (BLM, 1986), and the U.S. Forest Service Scenery Management System (SMS) (U.S. Forest Service, 1996).

7.11.1 Affected Environment

A characterization of the natural and man-made visual elements that have created the visual setting within the VSOI is provided in this section. This characterization includes a description of the visual inventory methodology, the VSOI, and a description of the regional landscape.

7.11.1.1 Regional Landscape Setting

The proposed project is located within a generally level or slightly rolling desert terrain. Vegetation is minimal and scattered. It may be categorized as scrub in character, seldom reaching more than 5 feet in height. Streams in the region are ephemeral, running only during periods of rainfall. The most significant feature adjacent to the site is the continuing development of wind turbine energy generation facilities that take advantage of the prevailing winds in the San Gorgonio Pass and surrounding region. There are approximately 4,000 wind turbines in this area. Their towers range in height from approximately 80 to 225 feet. The rotors add another 16 to 105 feet to the tower height, making the total height of the wind turbines approximately 100 to over 300 feet. The towers range from light steel pylons to heavy lattice structures similar to high voltage power line towers. Some have solid white metal or fiber masts, often up to 4 feet in diameter. On days when there is a modest or heavier wind, the whole landscape appears to shimmer as the rotors spin, creating a sea of undulating motion. The wind turbines visually dominate the area. Supporting the wind turbines on the ground are small switching and monitoring structures similar to mobile homes, power lines, and service roads. Adjacent to the project site is the massive SCE Devers substation.

Views are typically panoramic in scale, encompassing large horizontal expanses of desert with minimal vegetation or distinguishing terrain. Vegetation is primarily low-growing and the coloration is closely associated with muted desert tans and greens. The visual backdrop to the project area is provided by the Little San Bernardino Mountains to the north and the Indio Hills to the southwest. Mount San Jacinto is a regional landmark in the area. The southeast is comprised of open desert and low hills. The mountains in the background provide a backdrop for most views in the area. The color of these mountains shifts toward blue – an effect of distance and aerial perspective. The natural scene is heavily contrasted by the wind turbine farms, which extend for several miles in lines perpendicular to the wind direction over San Gorgonio Pass. I-10, an eight-lane high-speed truck route, and to a lesser extent State Route (SR) 62, also have become part of the visual character of the area.

7.11.1.2 Visual Sphere of Influence

The area in which this project has the potential to cause significant effects on sensitive viewers and on the existing setting is defined as the VSOI (Figure 7.11-1). The VSOI for this project was established as a 4-mile radius from the proposed power plant site matching the U.S. Forest Service middleground distance zone (0.5 to 4 miles); other distance zones identified by the Forest Service include foreground (from the

observer to 0.5 mile), background (4 miles to infinity), and seldom seen (landscape areas screened by topographic features). Although it may be possible for the proposed project to be perceived from certain areas beyond 4 miles, the relatively short power plant components (in relation to the towering wind turbines) and the large number of existing facilities nearly surrounding the plant site indicate a 4-mile radius VSOI is sufficient.

Outside the 4-mile VSOI, views of the proposed project lack sufficient spatial and scale dominance in a setting shared with the existing SCE Devers substation and numerous wind turbine generation facilities. As a result, it is assumed that viewing areas beyond the 4-mile VSOI would experience insignificant visual impacts. Regional views beyond 4 miles were generally considered in the context of the proposed project and associated impacts, but were not considered in detail given the distances involved.

Additional components of the proposed project occurring inside the established VSOI include gas supply pipeline rights-of-way, potable water supply pipeline rights-of-way, transmission towers and lines and the construction laydown area. The gas supply and water supply pipelines will be buried approximately 3 feet underground and will lack aboveground components, with the possible exception of occasional short aboveground markers. The construction laydown area represents a short-term activity and is located within existing disturbed wind turbine facility areas. Since these ancillary components are restricted to temporary disturbance necessary for construction, or are not visible when construction is complete, no potential long-term impacts associated with this activity are anticipated. It was not deemed necessary to include these facilities in this analysis of impacts within the established VSOI.

7.11.1.3 Visual Inventory Methodology

The following sections describe the visual inventory methodology used for this assessment. Elements identified and inventoried included the existing landscape character/scenic quality of the project site and the surrounding area within the VSOI, viewers who may experience visual impacts of the project within the VSOI, and applicable laws, ordinances, regulations, and standards (LORS) (described in Section 7.11.5)

Baseline data collection began with a review of existing project documents and relevant publications to gain familiarity with the existing landscape setting; visual resource issues of concern, including sensitive land uses adjacent to, or crossed by, project components; and the characteristics of the proposed project.

Following baseline data collection, a field reconnaissance was conducted. During the field reconnaissance, representative photographs were taken from various locations within the VSOI and descriptions of the existing landscape characteristics and sensitivity were compiled. This inventory included assessment of existing scenic integrity, visual absorption capability, viewer sensitivity, viewer exposure, and visual contrast.

Landscape Character/Scenic Integrity

Every geographic area has a “sense of place” or a visual and cultural image that is described as landscape character. The landscape character is derived from a combination of the physical, biological, and cultural attributes that make each landscape unique or identifiable. Typically, a tiered level of aggregation for landscape character is employed to capture the existing scenic integrity values. These tiers are generally described at a regional level, characterized at a local scale, and then specifically identified as an image type for local viewers within the VSOI.

For this assessment, the U.S. Forest Service SMS landscape integrity criteria were chosen to describe the landscape character of the VSOI and the project site itself. The concept of evaluating the scenic integrity within the VSOI plays an important role in establishing the magnitude of impact created by the proposed

project when considered with other impacting visual elements (e.g., the SCE Devers substation and wind turbine facilities).

For the purposes of meeting CEC requirements (Appendix B (g) (6) (B) of the Siting Regulations), the characterization of scenic quality inventoried within the VSOI is defined and discussed based on the following descriptions:

- High Quality or High Scenic Integrity: areas exhibiting high scenic integrity either in cultural context (i.e., a landscape representing or identifying with a distinct human era) whether tangible or not (e.g., rural historic districts) and/or lacking significant apparent man-made disturbances over time (e.g., wilderness areas); an area for which public and agency sentiment may regard noticeable changes as unacceptable.

- Moderate Quality or Moderate Scenic Integrity: areas exhibiting moderate scenic integrity in cultural context (e.g., rural agricultural areas) with man-made disturbances noticeable and long term, but recoverable over time (e.g., soil disturbance when re-vegetated); an area for which public and agency sentiment for changes occurring may be negotiable.

- Low Quality or Low Scenic Integrity: areas representing low scenic integrity in cultural context (e.g., grain processing facilities) with man-made disturbances highly noticeable and permanent (e.g., transmission lines); an area for which public and agency sentiment for changes occurring are low to indiscernible.

Key Observation Points

For this assessment, a Key Observation Point (KOP) is a location where it can be confidently assumed that viewers may be susceptible to a change in scenic quality resulting in a visual impact caused by the introduction of the CPVS within their viewshed.

Generally, KOPs assigned a high sensitivity level include residential areas, trails, vista/interpretive overlooks, some recreational areas (e.g., campgrounds), designated or nominated scenic travel routes, recreation destination routes, or significant cultural properties (listed or eligible for listing on the National Register of Historic Places). However, existing viewing conditions from high sensitivity residential areas may also be characterized as having low scenic integrity (e.g., presence of overhead power lines). Moderate sensitivity KOPs generally include high-end commercial developments (e.g., business parks), some recreational activities (e.g., shooting ranges), and major travel routes. By definition, views from industrial and/or low sensitivity viewing areas do not qualify as KOPs.

Visibility analysis was conducted to identify areas within the VSOI that would have limited or no potential for viewing the proposed project. The remaining areas were considered for the selection of KOP. Identification of KOPs was done in conjunction with personnel from the CEC (Knight, 2007), and is based on a review of land use data, field reconnaissance, and evaluation of visual resources in the project area. Assessment of potential impacts on KOPs assumed a worst-case scenario wherein all sensitive viewers have views toward the proposed project on a high visibility day (defined as visibility up to 5 miles and beyond) and would best represent the disparate viewing conditions and viewing opportunities.

The existing views and simulations developed (see Section 7.11.1.4.5 below) represent views from KOPs within the VSOI, including both high sensitivity viewers and moderate sensitivity viewers.

7.11.1.4 Visual Inventory Results

Landscape Character/Scenic Integrity

The VSOI is dominated by a desert landscape characterized by scrub bush and almost devoid of trees or larger vegetation. Colors experienced in the VSOI consist largely of earth tones, including shades of tan, brown, gray, blue, white, and minimal green. This vegetation is scattered, homogenous, and provides little texture to the land. The landforms in the VSOI are mostly lacking any variation and represent mostly flat or rolling terrain. Devers Hill is the only topographic feature in the VSOI; it is a small hill rising to less than 200 feet above the surrounding area and lies to the east of the project site. The overall feel experienced is that of an open landscape that can be characterized as smooth, with nearby mountains adding to form and line attributes of the background views.

The project site occupies 37 acres and contains one former residence but is located on otherwise vacant, undeveloped land that is almost completely surrounded by industrial facilities involved in energy production or distribution. To the north and east there is a wind generation facility with approximately 100 wind turbines. Examples of typical wind turbine types and sizes in the area are provided in Figure 7.11-2. East of the proposed site are approximately six scattered residences. To the south and southeast are more wind turbine facilities with 100 or more wind turbines. West of the proposed project is the SCE Devers substation. This high voltage substation is approximately 105 acres and contains numerous electrical facilities with large vertical components.

Overall, the landscape character inventoried within the VSOI is consistent with moderate and low scenic integrity. The project site and the immediate vicinity are of a low scenic integrity that is reflective of the prominent industrial character of the energy related facilities. Further out in the VSOI, the scenic integrity remains low or in some cases rises to moderate in washes or undisturbed areas. This low scenic integrity is largely influenced by the dominant vertical elements associated with the wind turbine facilities that are common in the area and provide visual clutter in many of the viewsheds of KOPs. It should be noted that existing scenic integrity will vary within the overall classification based on specific viewing conditions (e.g., orientation of view, duration of view).

Key Observation Points

Portions of the proposed project may be visible by many of the residences and travelers within the VSOI. Windshield field surveys conducted within the VSOI determined that hundreds of residences, a few recreation facilities, and some commercial facilities occur within the VSOI. Most, however, occur beyond a mile and half from the project site and may not directly face or have views of the CPVS. Additionally, the project would be visible to travelers on local roads and roads deemed scenic. Scenic roads include I-10 (approximately 1.75 miles to the south) with a traffic volume of approximately 142,000 vehicles per day, SR 62 (approximately 1.35 miles to the east) with a traffic volume of approximately 30,000 vehicles per day, and Dillon Road (approximately 0.5 mile to the south).

Five KOPs were selected to characterize the existing visual setting. These KOPs vary in distance from the proposed project (approximately 0.4 mile to 1.8 miles), provide a number of view angles, and represent different viewer types (e.g., residential, travelers). A map illustrating the location of the KOPs is provided in Figure 7.11-3. The existing views and simulations developed for the proposed project are shown in Figures 7.11-4 through 7.11-13.

- KOP 1 (Figure 7.11-4) – Westbound travelers on I-10 will have a limited opportunity (typical speeds range from 55 to 70+) to view the energy project to their right at approximately 1.75 miles in the distance (9,240 feet). The project is not in the primary cone of vision of westbound travelers and will be viewed through and in the context of the adjacent wind turbines.

- KOP 2 (Figure 7.11-6) – KOP 2 represents travelers on Dillon Road, in this case westbound travelers. Also, a collection of homes is 0.25 mile behind this location and would possess similar but partially obscured views due to the metal fabrication plant adjacent to this KOP on the north side of the road. The existing wind turbine farms dominate this view. This KOP is 1.2 miles (6,300 feet) from the project site. A KOP for eastbound travelers was deemed unnecessary due to the project being largely screened by the SCE Devers substation until the project would be far outside the normal driving cone of vision.

- KOP 3 (Figure 7.11-8) – There are approximately 12 small- to medium-sized residences in the vicinity of Diablo and Smoke Tree Road. While the primary view is to the south toward Mount San Jacinto, KOP 3 represents the view these residents will see to the east as they exit their property. The existing SCE Devers substation is to the left of this intersection. The proposed energy plant is approximately 0.4 mile (2,300 feet) to the northeast, beyond the substation. The existing wind turbine facilities dominate this view. It should be noted that this KOP is meant to represent the closest residential viewers, but the closest views would be from the four or five residential units to the east of the site at the base of Devers Hill. Local experts who were consulted advised against visiting these residences because of safety concerns; KOP 3 will provide some insight into views from these residences.

- KOP 4 (Figure 7.11-10) – This KOP represents the approximately 48 residential viewers in the area of SR 62 and Pierson Boulevard. This KOP is approximately 1.7 miles (9,000 feet) away from the project site. Additionally, this location is generally representative of travelers on SR 62 (typically traveling at 50 to 60 mph) and residential viewers west of SR 62. From this location, or any generally along SR 62 north of Dillon Road, views of the project site will be partially or completely seen through or screened by the SCE Devers substation. Viewers from KOP 4 experience partial screening from the substation as well as backdropping provided by Devers Hill and, in the distance, Edom Hill. Southbound travelers will have a direct view of Mount San Jacinto in their direction of travel with the project site to the east (their left). Northbound travelers would have direct views of the San Bernardino Mountains in their direction of travel with the project site to the east (their right).

- KOP 5 (Figure 7.11-12) – KOP 5 represents the closest residence northeast of the project site. In the immediate area of KOP 5 there are approximately 10 residences. Additionally, there are a number of residences east of KOP 5 (east of Indian Avenue) that may have views similar to KOP 5 but with a much greater view distance. No KOP was selected directly east of the site due to safety concerns (see KOP 3 above) or because Devers Hill is located almost directly east of the site 0.30 mile (1,600 feet) away and would effectively block most views from further east.

The project description identifies routes for the fuel gas supply pipeline and a potential potable water line corridor. These locations are identified in Section 2 on the plot plan map. In all cases, the specifications call for burial of the pipelines to a minimum depth of 3 feet. The routes traverse unpaved roads, except a 1-mile stretch of Dillon Road which is paved, or areas of the wind turbine facilities, and do not go through residential or developed commercial areas. With the exception of occasional aboveground pipeline markers, these project components will not be visible to the general public. Therefore, no KOPs were established for these features.

7.11.2 Environmental Consequences

7.11.2.1 Significance Criteria

The assessment of significant visual impacts is based primarily on CEQA requirements. Appendix G of these guidelines identifies criteria and areas of concern regarding a project's potential impact on visual resources, as follows:

- A substantial adverse effect on a scenic vista.
- Substantial damage of scenic resources, including, but not limited to trees, rock outcroppings, and historic buildings.
- Substantial degradation of the existing visual character or quality of the site and its surroundings. In this analysis, substantial degradation is defined as a perceptible, long-term (longer than one year), high level of visual impacts occurring within moderately to highly sensitive public views.
- Creation of a new source of substantial light or glare that would adversely affect day or nighttime views in the area.

In addition, the CEC requires that consideration be given to the following questions:

- Will the project comply with local guidelines or goals related to scenic quality?
- Will the project significantly alter the existing natural viewsheds, including any changes in natural terrain?
- Will the project significantly change the existing scenic quality of the region or eliminate visual resources?
- Will the project significantly increase light and glare in the project vicinity, particularly nighttime glare?
- Will the project result in significant amounts of back-scatter light into the nighttime sky?
- Will the project result in a significant reduction of sunlight, or the introduction of shadows, in areas used extensively by the community?

Table 7.11-1 describes the matrix used to determine visual impact significance for KOPs. The level of impact significance is determined by combining visual impact susceptibility with severity. A brief definition of impact levels is provided below.

- Significant – will likely cause a substantial long-term and adverse effect on landscape character or scenic quality on an existing viewshed due to the contrast between the proposed project and the level of existing scenic integrity.
- Adverse But Not Significant – will create a noticeable but not substantial change in landscape character/scenic quality; or will cause a noticeable but not substantial change on a KOP viewshed.
- Insignificant – may or may not be perceptible but considered minor in the context of existing landscape characteristics and view opportunity.

7.11.2.2 Assessment Methodology

This section discusses the assessment methodologies used to evaluate impacts of the proposed project on landscape character/scenic quality and KOPs. Assessment of impacts on landscape character/scenic quality was performed using the following main considerations: (1) the level of existing scenic integrity; and (2) the degree of perceived change (or project contrast) to the current naturalness of the area (or scenic integrity). The primary factors considered in the assessment of impacts on KOPs include: (1) the susceptibility of a KOP to realize an impact; (2) the sensitivity of the viewer; (3) the magnitude or severity of impact realized on a KOP. The dimensions of the major structures identified in Table 7.11-2 aided in this assessment. To assist in the validation and confirmation of the results of the impact assessment, photography of the existing condition was compared with photo simulations of the CPVS representing views from each of the KOPs (see Figures 7.11-4 through 7.11-13).

Landscape Character/Scenic Quality

The assessment of impacts on landscape character/scenic quality used the inventoried level of existing scenic integrity at the project site and compared that with the degree of change that is predicted to occur on landforms and vegetation at the site with the construction of the proposed project. The inventory results show that the existing scenic integrity at the plant site was low, in large part due to the proximity of the SCE Devers substation, wind turbine facilities, transmission line corridors, roads, and other cultural modifications to the surrounding landscape (e.g., signs, fences, overhead distribution lines, and other industrial facilities). Anticipated levels of landscape contrast resulting from ground-disturbing activities and from vegetation removal are anticipated to be low.

Normally in the presence of natural amenities of a higher quality (e.g., rock outcroppings, large trees, bodies of water, landscape intactness), higher impacts would typically occur on scenic quality to the extent that a proposed project's features would jeopardize or modify these natural amenities. However, the proposed plant site lacks these types of contributing natural amenities.

Key Observation Points

Susceptibility

The following components were considered in identifying the degree to which a KOP would be susceptible to impact:

- Scenic integrity level – the amount of noticeable disturbances within a landscape setting;
- Viewer sensitivity level – the anticipated level of sensitivity a viewer may have for changes occurring within the viewsheds;
- Project visibility – an evaluation of the angle of view, available screening, lighting, and time of day; and
- Viewer exposure – an evaluation of the distance, number of viewers, and duration of view.

Table 7.11-3 identifies individual values relating to visual impact susceptibility assigned to each component above for each KOP included in this assessment.

Severity

The potential change a project can cause to a specific landscape setting within a specific sensitive viewshed is assessed a level of visual impact severity. Severity levels can range from significant to indiscernible. A number of components are considered and combined to determine the magnitude of visual impact severity the proposed project may have. These components are as follows:

- Form, line, color, texture, and scale contrast;
- Scale dominance and spatial dominance;
- View blockage; and
- Night lighting.

Implicit in this rating methodology is the acknowledgement that, for a visual impact to be considered significant, two conditions must exist: (1) the existing landscape must be of high quality and be highly valued by the public; and (2) the perceived incompatibility of one or more proposed project elements or characteristics must tend toward the high extreme, leading to a substantial reduction in visual quality.

Table 7.11-4 identifies individual values relating to visual impact severity assigned to each component above for each KOP included in this assessment.

Photo Simulations

The development of photo simulations assisted with the determination of impacts on KOPs. The approach used to develop these photo simulations is described below.

Photo/3D Model Composite Simulation

To ensure a high degree of visual accuracy in the simulations, Computer Aided Design (CAD) equipment and the use of Global Positioning Systems (GPS) allow for life-size modeling within the computer. This translates to using real world scale and coordinates to locate facilities, other site data, and the actual camera locations corresponding to three-dimensional (3D) simulation viewpoints. The degree of accuracy of the CAD equipment is absolute; the accuracy for the GPS location data is to within approximately 1 meter, or 3.28084 feet.

Microstation/AutoCad, 3D CAD, and GPS Data Integration

A digital elevation model is used to provide a 3D representation of Earth's surface within the project vicinity and a CAD site map is imported as a background reference. CAD drawings of both existing and proposed facilities are placed on top of the site map to register and orient the correct locations of KOPs. The 3D massing models of both the existing structures and the proposed modifications are generated in real world scale. The GPS camera positioning information is then referenced to the 3D data set.

Model View Professional/3D Studio Max/Adobe Photo Shop

An electronic camera lens matches the camera lens that was actually used in the field. An 8-mega pixel camera with a 50-mm lens was used consistently throughout the process. This lens selection allows for viewing of the computer-generated model in the same way that the proposed project would be viewed in the field.

Next, the digital photograph is transferred into the 3D database as an environment within which the view of the 3D model is generated. To generate the correct view relative to the actual photograph, the electronic camera is placed in the digital environment at a location corresponding to the real world location from which the photograph was taken. This is provided by GPS records collected during field

study. From here, the 3D wire frame model is displayed on top of the existing structures, topography, or natural features to ensure proper alignment, scale, angle, and distance. When all lines of the wire frame model exactly match the photograph, the camera target position is confirmed.

To complete this phase, the sun angle is set, materials and textures are applied, and the composite image is rendered through a computer image process known as RayTracing. Any additional filters required for appropriate atmospheric conditions, such as blur/focus/haze etc., are applied at this time.

The photo simulations developed for this project have been designed to be viewed 10 inches from the viewer's eye. This distance will portray the most realistic life-size image from the location of the KOPs.

7.11.2.3 Impact Results

Visual Impacts on Landscape Character/Scenic Quality of the Site

High- or moderate-quality natural amenities (e.g., rock outcroppings, mature vegetation, or water bodies) are absent on the project site. Long-term impacts as a result of the construction of the project would include the necessary earthwork, including cut and fill, required to create a series of subtle terraces to provide level pads for the elements of the proposed project. The large generation facilities would represent a new facility on a site that is currently undeveloped, with the exception of one former residence, and would represent a change or modification to the existing condition. However, in the context of the surrounding industrial modifications to the landscape, the proposed project would not represent a significant impact on landscape character/scenic quality.

Short-term construction impacts on visual resources would result from the temporary presence of vehicles and heavy equipment, facility components, and workers who would be visible during the construction of the actual facilities, site, and rights-of-way cleanup and restoration. Temporary or short-term impacts may also include the scraping or disturbance of soil and removal of vegetation at the construction laydown areas, tensioning and pulling sites, gas pipeline alignment, and water pipeline alignment. As a result, primarily scrub or brush species of vegetation will be removed and soil manipulated. Re-vegetation of disturbed areas (e.g., pipelines, laydown yard, tensioning and pulling sites, and temporary road construction easements) will eliminate long-term impacts to the landscape character. Therefore, the visual intrusion of construction equipment, materials, and personnel would constitute an adverse but not significant impact, because it would occur only for a relatively short time and would not result in a long-term landscape change following site restoration for the pipeline or construction laydown areas.

Visual Impacts on KOPs

Table 7.11-1 establishes the matrix used to arrive at impact significance level. Table 7.11-5 summarizes the visual impact susceptibility, visual impact severity, and the resultant visual impact significance on KOPs. For a more detailed description of the elements used to assess impacts, please refer to Tables 7.11-3, 7.11-4, and 7.11-5. A discussion of each KOP follows.

- KOP 1 – Figure 7.11-5, shows the proposed project simulated on the project site approximately 1.8 miles (9,500 feet) from the westbound shoulder of I-10. The most visible features of the proposed project are the eight CTG stacks at 90 feet tall. Most other features are in the 12- to 20-foot-high range, with the cooling towers reaching 46 feet and switchyard towers at 90 feet. From this location, the proposed project will be seen within the context of the adjacent wind turbines, power lines, and the SCE Devers substation. The stacks and other project facilities are not as high as the adjacent wind turbines, which are between approximately 100 and over 300 feet tall. In all cases, these structures are proportionately low within the visual context and do not intrude on the

scenic backdrop or skyline. The visual elements are relatively consistent with the adjacent structures and fail to contrast with the other view elements.

The visual impact susceptibility is low for this KOP, given the existing visual character, the limited view duration, the viewers' expectations traveling I-10, and the proposed project occurring outside the primary cone of vision. The view distance from I-10 combined with the comparatively low profile of the plant results in a low impact severity. Overall, it was determined that the proposed project would have no impact on viewers along KOP 1.

- KOP 2 – The simulation (see Figure 7.11-7) shows the proposed project located to the left and partially behind Devers Hill, and to the right and partially in front of the SCE Devers substation. The major vertical components of the proposed project are subordinate to both the adjacent wind turbine structures and the backdrop hills.

  The existing scenic integrity of the area is low due to the wind turbine facilities. View distance, combined with the project occurring on the extreme right of the primary cone of vision, result in a low view exposure. The forms of the proposed project will be discernable and appear more massive than the adjacent structures. However, they are not obtrusive nor do they impair any views. Overall, it was determined that the proposed project would have a less-than-significant impact on viewers along KOP #2.

- KOP 3 – The photo simulation of the proposed project, as shown in Figure 7.11-9, illustrates about 0.4 mile (2,300 feet) away. The proposed project will be seen through the transmission corridor and the substation. The most prominent items are a number of the eight CTG stacks and the coolers on the south end of the project site. These elements are lower than the adjacent transmission facilities, but possess a comparatively more solid and structural appearance. The transmission line from the proposed project to the substation is shown, but the towers are not distinct in the context of the existing towers. While the plant is discernable, its forms are not dissimilar to the adjacent wind turbines, there is no view impairment, and the level of visual contrast is low. Overall, it was determined that the proposed project would have a less-than-significant impact on viewers from KOP 3.

- KOP 4 – The photo simulation shown in Figure 7.11-11 illustrates that the proposed project will be visible, with the most prominent features being the eight CTG stacks. Various other facilities will also be discernable, including the coolers. These components will not be as high as the vertical facilities of the SCE Devers substation, but exhibit a more solid appearance. Edom Hill and the Indio Mountains will provide a backdrop for the proposed project from this vantage point. In context with the SCE Devers substation, transmission corridors, and wind turbines, the project will appear co-dominant in this landscape. The forms of the project are consistent with the substation, transmission lines, and wind turbines. The proposed project does not block or impair views and the level of visual contrast is low. Overall, it was determined that the proposed project would have a less-than-significant impact on viewers from KOP 4.

- KOP 5 – Figure 7.11-13 provides a photo simulation of the proposed project looking southwest. The most discernable features of the proposed project are the eight CTG stacks. Other features visible in this simulation include the coolers at the north end of the facility and a number of storage tanks. All of these features, however, are seen through and in the context of the wind turbines. The forms of the project are not dissimilar to the wind turbines and, at 90 feet and less, are lower. The project is back-dropped by

Whitewater Hill in the distant middleground and Mount San Jacinto in the background. The proposed project offers no opportunity to block or impair views and provides little visual contrast with the existing condition and features. Overall, it was determined that the proposed project would have a less-than-significant impact on viewers from KOP 5.

Indirect, temporary, and construction-related impacts on all KOPs and other sensitive viewers may include those associated with the presence of construction equipment during construction activities and the increase of fugitive dust created by the movement of vehicles on dirt roads. Impacts on visual resources during the construction period of the proposed project, while potentially adverse to some, are expected to range from less than significant to none.

7.11.2.4 Night Lighting

Night lighting refers to the use of lights to light areas of project facilities for security, safety, or operational reasons. Night lighting can potentially result in impacts on visual resources by increasing ambient light to surrounding areas, creating distracting glare, and reducing sky or star visibility. The proposed project is located in a relatively industrialized area with features that result in reduced lighting contrast when compared to the unlighted areas of the undeveloped, open desert. While the proposed project is not located on an existing road with street lights; in fact, few of the streets in the area have many street lights, some of the surrounding wind turbines display permanent marker lights as required by the Federal Aviation Authority for safety purposes. The nearby residences also provide some lighting of their own. However, the most prominent generator of nighttime light is the SCE Devers substation, located adjacent to the project site. The SCE Devers facility is generally well lit, with some variation in intensity and color of lighting from the north end to the site to the south.

The use of shielded lighting elements, directed fixtures, and motion or timing sensors will reduce visual impacts in the nighttime setting. However, there is still potential for impacts due to the indirect lighting of project surfaces and general backscatter. Specific night lighting effects or impacts on visual resources will vary from KOP to KOP, but the general isolated location of the project and proximity to the SCE Devers substation will limit the significance and severity of the potential impacts. The impacts would be greatest in descending order on KOPs 3, 5, 2, 4, and 1. Overall, it was determined that the project would have an adverse but not significant impact on visual resources from night lighting.

7.11.2.5 Visible Vapor Plumes

Cooling Tower Plume Characteristics

The potential exists for water vapor condensation (vapor plumes) to be visible from the 46-foot-high cooling towers. The frequency, persistence, and size of visible vapor plumes depend primarily on the design and type of cooling tower, and meteorological conditions of temperature and humidity. Visible plume formation is more frequent during the cooler seasons (i.e., winter) when ambient conditions are more favorable to plume formation. For this reason results focused on seasonal daylight clear hours. Seasonal daylight clear hours are defined as daylight hours from November through April that includes clear skies and 50 percent of the scattered or broken skies excluding overcast skies, and hours with weather (essentially, this would be clear winter days). It should be noted that the same ambient conditions that result in plume formation from the cooling tower would often cause natural weather conditions of fog, haze, and precipitation to occur, which generally reduces visibility. Times when fog, haze, or precipitation is present were excluded from plume frequency calculations for the CEC analysis.

The characteristics of visible plumes that are important to an assessment of visual impacts include plume length (the distance over which a plume remains intact), plume height (the distance from ground to the centerline of the plume), and plume shadowing (the blocking of incident solar radiation by a plume). URS utilized the CSVP model in consultation with CEC staff to assess potential visual impacts associated

with visible vapor plumes. To simulate worst-case conditions, the five cell cooling tower located at the north end of the project facility was analyzed. Visible plumes from the three cell cooling tower located at the south end of the project facility would be less visible. Given the significant distance between the two cooling towers (1,580 feet), the two plumes would not merge. It is expected that the plant will operate primarily during the summer months when plumes will dissipate rapidly and subsequently be less visible. This reduced visibility is the result of the hot, windy summer, when the winds will help to dissipate the water in the plumes within a short distance from the cooling tower. A description of this model and the data inputs that were utilized may be found on the included DVD. The CSVP model predicted that approximately 99 percent of the seasonal daylight clear hours and 97 percent of all hours, a plume will be visible. Layers of conservatism have been built into the algorithms in the CSVP model, thus over predicting the size and frequency of the visible plumes is not unexpected. Although a plume may be predicted by CSVP, the plume may be very small since it is assumed that as the plume exits the cooling tower it is completely saturated. Since the proposed project is located in a hot, windy desert environment these vapor plumes will evaporate or be dispersed rapidly after exiting the cooling tower.

The resultant calculations indicated that the 20th percentile visible plume for seasonal daylight clear hours would reach a height of approximately 89.2 meters, have a width of approximately 27.9 meters, a depth of approximately 25.6 meters, and shift downwind of only 4.0 meters. This plume would be essentially vertical with a slight tilt downwind. Eighty percent of the time that plumes are visible, the plume dimensions will be smaller than this plume.

Viewshed

When plumes are formed over the project site they will extend above the cooling towers with minimal downwind tilting. The 20th percentile seasonal daylight clear plume height starts above the 46 foot cooling tower and can reach an ultimate height of approximately 293 feet above ground and is visible for approximately 13 feet downwind of the stack. Under this condition, the plume would create a co-dominant effect related to the project structures. The 20th percentile plume would likely be visible from all of the KOPs. Viewers directly north or south of the proposed project would experience a single plume effect as a result of plumes from both the five cell and three cell cooling towers being in line. Viewers to the east or west would experience two distinct plumes with the five cell cooling tower plume appearing larger than the three cell cooling tower plume. Intermediate angle viewers (i.e.., viewers to the northwest, northeast, southwest, or southeast) would experience a merging effect of the two cooling tower plumes.

Plume Contrast

The visible plume considered in relation to the surrounding vegetation would have low to moderate contrast. The primary factors driving this association are the vegetation colors and the existing backdrop of the surrounding mountains. During the months when plume formation is at its greatest, prevalent colors of the landscape vegetation are muted tones of green, blue, grey, and tans. Furthermore, snow on Mount San Jacinto may further assist in the reduction of plume contrast. During summer months, the plumes are not likely to be visible due to warmer temperatures and drier conditions resulting in small or entirely absent plumes. The plumes would cause low contrast levels to form and line features within the VSOI. This is a result of a plume generally blending more naturally with the overall rounded nature of the surrounding topography.

Scale Dominance

The formation of plumes when related to the proposed project structures (i.e., 90-foot CTG stacks), the Devers Substation, the nearby transmission line towers, and the hundreds of adjacent wind turbines (some up to 325 feet tall) would create an overall co-dominant level of scale dominance.

Spatial Dominance

The location of plumes will be almost completely vertical above the cooling towers. Spatial dominance will form a subordinate condition with regard to the overall composition of the setting due to the backdropping effect of the surrounding mountains from the majority of viewpoints and the many vertical features present in the VSOI.

View Blockage

Some view blockage of views towards moderate to high-quality landscapes may occur during plume formation. The severity of view blockage would therefore be low to moderate, given the frequency of this scenario occurring.

Night Lighting

Plumes may be more fully accentuated at night by lighting. Lighting for this project will utilize directional and shielding devices reducing the potential effects of lights illuminating the vapor plumes. Previous studies of existing vapor plumes have shown that the plumes are not highly visible at night, unless there are substantial ambient light conditions, such as those found in urban settings. Due to frequency and size, the plumes are expected to have a low impact at night.

Visual Impact Severity

Given the relatively few hours that the proposed project is expected to operate, and that the majority of operations will occur in the spring and summer, the overall visual impact severity on key observation points and other sensitive viewers would be low considering the periods of the year when plume formation is most likely to occur.

Visual Impact Susceptibility

Components of scenic integrity, viewer sensitivity, visibility, and viewer exposure were considered in the assignment of a visual impact susceptibility level. Given the limited operation hours and the summer months when most of the operational hours of the plant occur, viewer exposure to plumes was rated low. However, viewer sensitivity and plume visibility were rated high. With the existing scenic integrity within the VSOI rated as low to moderate, the visual impact susceptibility level during the formation of vapor plumes was rated moderate to high.

Visual Impact Significance

The overall level of impact on KOPs due to the formation of vapor plumes was rated as less than significant, due to the bulk of the project's operational hours expected in the summer months when plume formation conditions are least favorable resulting in plumes smaller than the predicted 20th percentile plume.

7.11.3 Cumulative Impacts

The proposed project will add a new industrial facility to the overall landscape setting of the VSOI. It will contribute to cumulative adverse visual influences where aboveground facilities or evidence of underground facilities (e.g., cleared rights-of-way) occupy the same field of view as other built facilities or impacted landscapes that currently are in the viewsheds of sensitive viewers within the VSOI. The existing SCE Devers substation, wind turbine facilities, and associated transmission lines have compromised the existing landscape setting. Therefore, the proposed project along with the existing cultural modifications would not dominate the landscape setting.

The cumulative list of projects identifies eight proposed projects that may have the potential to generate cumulative impacts when viewed with the project. These projects or proposed projects include three energy projects, four residential projects, and one transportation improvement project.

The first energy project is the Dillon Wind Farm, which includes the installation of 45 wind turbines located in three separate areas, including (1) an area west of Devers substation, (2) an area 2,000 feet east of the project site, and (3) an area 4,500 feet to the southeast of the project site. The Riverside County Planning Commission approved of this project in May 2006. Given that the nature of the Dillon Wind Farm is consistent with wind farm facilities already nearly surrounding the CPVS, no cumulative visual impacts are anticipated.

The second energy project is the Green Path North Project. This project is a three component project aimed at upgrading existing 230-kV lines, siting a new substation on the Palo Verde-Devers transmission corridor, and increasing deliverability of existing and potential renewable resources across the Imperial Valley. All of the components of this project are outside of the VSOI for the proposed project. Due to view distances beyond 8 miles there is no opportunity to view components of this project with the proposed project, and thus no cumulative visual impacts are anticipated.

The third energy project is the WECS 20 (EIR). This project is west of SR 62 and just north of I-10. This project includes the removal of 16 existing wind turbines and the installation of 8 replacements. The approximate distance from the WECS 20 location and the proposed project is 2 miles. Given this view distance and the fact that the proposed wind turbines are consistent with the existing wind turbines, no resultant cumulative visual impact with the proposed project is anticipated.

The first two residential projects are the Oasis Annexation and the Desert Dunes Residential Expansion. These projects are outside the VSOI and with this view distance no cumulative visual impact is anticipated. The third and fourth residential projects are the Palmwood and Outparcels EIR as well as the Alpine Group Development. These projects will be located 2.5 miles to the north and 1 mile northwest of the project site, respectively and portions of these projects are inside the VSOI. Little opportunity exists to view the proposed project and this project together, due to view distance and the vastly different nature of an energy project and a residential subdivision. Cumulative visual impacts are not anticipated.

Finally, the Indian Avenue/I-10 Interchange project involves improvements to the existing interchange. This project will increase the footprint of the interchange to provide for projected traffic volumes. This interchange is approximately 2.5 miles from the proposed project. Improvements to the interchange are consistent with the existing viewing conditions. Given the distance and development between the CPVS and the interchange, no cumulative visual impacts are anticipated.

When considered with the existing visual setting, the proposed project would not significantly alter existing scenic quality or viewsheds from KOPs or other viewing areas and would not substantially add cumulative effects.

7.11.4 Mitigation Measures

Because no significant visual impacts are expected with the implementation of the proposed project, no mitigation measures are warranted at this time. However, the following design features were incorporated into the proposed project to reduce the potential visual impacts:

7.11.4.1 Power Plant

- Structures, stacks, buildings, and storage tanks will be painted in accordance with CEC guidelines and will be selected to blend in with the existing visual conditions.

- The colors will provide for subtle variations and contrast. The selected color will help the project to blend more naturally with the natural setting.

- Fencing will be constructed of nonreflective materials, treated, or painted to reduce visual effects on sensitive viewers. Additionally, reflectivity of surfaces will be reduced by using nonreflective elements where practical.

7.11.4.2 Lighting

- Lighting on the project site will be limited to areas required for safety, will be directed on site to avoid back-scatter, and will be shielded from public view to the extent practical.

- All lighting that is not required to be on during nighttime hours will be controlled with sensors or switches operated such that the lighting will be on only when needed.

- High-pressure sodium vapor fixtures will be used. These lights typically produce low intensity amber light, which will reduce visual contrast with the night sky.

- Stacks and other tall project elements will be lit in accordance with Federal Aviation Administration guidelines.

7.11.4.3 Gas and Water Pipelines

- After construction, areas where vegetation has been removed will be restored to be consistent with the surrounding area. Pipeline routes may also follow road rights-of-way and therefore be placed under pavement or prepared dirt surfaces.

7.11.4.4 Lay-Down Yard/Tensioning

Upon completion of the project, the laydown yard and the tensioning and pulling sites will be restored to blend with adjacent vegetation.

7.11.5 Laws, Ordinances, Regulations, and Standards

7.11.5.1 Federal and State LORS

The proposed project, including all ancillary facilities, is located on private lands and is not subject to any federal or state land management requirements relating to visual resources. The project, including transmission lines and pipelines, will cause no visual impacts inconsistent with the LORS applicable to the protection of aesthetic values and visual resources.

There are designated State Scenic Highways within the VSOI. Portions of both SR 62 from its junction with I-10 to the San Bernardino County line 8.8 miles to the north, and I-10 from the San Bernardino County line to the junction with SR 62 25 miles to the east, lie within the VSOI and are designated State Scenic Highways. These locations are discussed in Table 7.11-6 under the County of Riverside General Plan, as the county is responsible for implementing the standards associated with development.

County of Riverside General Plan (LORS)

The relevant LORS for Riverside County are included in Table 7.11-6. The principal LORS regulating visual impacts from projects in Riverside County is the Riverside County Integrated Project and General Plan (2003). The plan establishes goals and standards for protecting scenic values of Riverside County.

Overall, this assessment has determined that the proposed project would not conflict with the goals set forth in the Riverside County Integrated Project and General Plan.

7.11.6 Involved Agencies and Agency Contacts

Issue	Agency/Address	Contact/Title	Telephone
Visual Resources within VSOI	82675 Highway 111 Indio, CA 92201	Jay Olivas, Planner	(760) 863-7579
Selection of representative KOPs within VSOI	California Energy Commission Energy Facilities Siting Division 1516 9th Street, MS 40 Sacramento, California 95814-5512	Eric Knight, Supervisor	(916) 653-1850

7.11.7 Permits Required and Permit Schedule

No permits are required regarding visual resources.

7.11.8 References

BLM (Bureau of Land Management), 1986. Visual Resource Management Inventory and Contrast Rating System.

California Energy Commission, 1997. Siting Regulations: Rules of Practice and Procedure and Power Plant Site Certification Regulations.

California Energy Commission, 2006. Siting Regulations: Rules of Practice and Procedure and Power Plant Site Certification Regulations Revisions.

County of Riverside, 2003. Riverside County Integrated Project and General Plan.

Knight, E., 2007. Supervisor, California Energy Commission, Energy Facility Siting Division, Sacramento, CA. Personal communication with E. Knight.

U.S. Forest Service, 1996. Scenery Management System. U.S. Department of Agriculture.

Table 7.11-1
Visual Impact Significance Matrix – Key Observation Points

Visual Impact Severity	Visual Impact Susceptibility		
	High	**Moderate**	**Low**
High	Significant[1]	Significant	Adverse But Not Significant
Moderate	Adverse But Not Significant[2]	Adverse But Not Significant	Insignificant
Low	Insignificant[3]	Insignificant	Insignificant

Notes:

[1] Significant impacts can be mitigated to a level that is not significant or can be avoided altogether with feasible mitigation. Without mitigation, the impact could exceed environmental thresholds.

[2] Adverse but Not Significant Impacts are perceived as negative but do not exceed environmental thresholds.

[3] Insignificant impacts may or may not be perceptible but are considered minor in the context of existing landscape characteristics and view opportunity.

Table 7.11-2
Dimensions and Visual Characteristics of Significant Structures and Equipment

Description	Material	Visual Characteristics	Dimensions		
			Length	Width	Height
Combustion Turbine Generators (CTG)	Steel	Ameron Pearl Gray	130	90	40 (55 for VBV Duct)
CTG Simple Cycle SCR/Oxcat/Stack	Steel	Ameron Haze Gray	67	30 (stack 13.5 ID)	90
Cooling Tower	Fiberglass	Light Earthtone similar to Nucor Lightstone	211	55	36 (46 ft stacks)
Cooling Tower	Fiberglass	Vendor Standard (light gray or off white)	127	55	36 (46 ft stacks)
Cooling Tower Building/Warehouse	Steel	Vendor Standard (light gray or off white)	125	60	20 ft eave
Operations Building	Steel	Light Earthtone similar to Nucor Lightstone	130	70	20 ft eave
Gas Compression Building	Steel	Light Earthtone similar to Nucor Lightstone	120	60	20 ft eave
Gas Compression Building	Steel	Light Earthtone similar to Nucor Lightstone	90	60	20 ft eave
Transformer Containment with GSU	Concrete Containment, Steel GSU	Light Gray	32	24	24
Unit Control Building	Steel	Light Earthtone similar to Nucor Lightstone	40	20	12 ft eave
Raw Water Storage Tank	Steel	Light Earthtone similar to Nucor Lightstone	-	80 dia.	36
Treated Water Storage Tank	Steel	Light Earthtone similar to Nucor Lightstone	-	70 dia.	36
Fire Water Pump Enclosure	Steel	Light Earthtone similar to Nucor Lightstone	30	11	12
Switchyard, Buses, and Towers	Aluminum Bus, Galvanized Structures	Aluminum Bus, Galvanized Structures	1275	100	90 ft poles
Switchyard Building	Steel	Light Earthtone similar to Nucor Lightstone	60	25	16 ft eave

Note: Final equipment sizing will be determined during the project detail design phase.

Table 7.11-3 Visual Impact Susceptibility – Key Observation Points					
	Visual Impact Parameters				
KOP	Scenic Integrity	Viewer Sensitivity	Visibility	Viewer Exposure	Visual Impact Susceptibility
KOP 1	Low	Moderate	Low	Short	Low
KOP 2	Low	Moderate	Low to Moderate	Short to Extended	Moderate
KOP 3	Low	High	High	Extended	High
KOP 4	Low	Moderate	Moderate	Short to Extended	Moderate
KOP 5	Low	High	Moderate	Extended	Moderate

Table 7.11-4 Visual Impact Severity – Key Observation Points				
	Visual Impact Parameters			
KOP	Visual Contrast	Project Dominance	View Impairment	Visual Impact Severity
KOP 1	Low	Subordinate (Low)	None	Low
KOP 2	Low	Subordinate (Low)	None	Low
KOP 3	Low	Dominant (High)	Low	Low
KOP 4	Low	Subordinate (Low)	Low	Low
KOP 5	Low	Co-Dominant (Moderate)	Low	Low

Table 7.11-5
Summary of Visual Impacts on Key Observation Points

KOP	Impact Description	Level of Susceptibility	Level of Severity	Visual Impact
KOP 1	KOP 1 was taken from the westbound I-10 shoulder, representing travelers on a scenic stretch of the interstate.	Low	Low	Insignificant
KOP 2	KOP 2 was taken from Dillon Road, a county scenic road, representing travelers on the road and nearby residences (0.25 mile away).	Moderate	Low	Insignificant
KOP 3	KOP 3 was taken southwest of the project site adjacent to the SCE Devers substation, representing a collection of residences.	High	Low	Insignificant
KOP 4	KOP 4 was taken from near SR 62 and Pierson Boulevard, representing both residences west of SR 62 and southbound travelers on this scenic designated highway.	Moderate	Low	Insignificant
KOP 5	KOP 5 was taken in an area to the northeast of the project site, representing a collection of residences in the area as well as residential views further to the northeast.	Moderate	Low	Insignificant

Table 7.11-6 Laws, Ordinances, Regulations, and Standards (Page 1 of 3)		
Local		
Laws, Ordinances, Regulations, and Standards	**Policy Description**	**Basis for Compliance**
County of Riverside General Plan – Chapter 3: Land Use Elements – Scenic Corridors – LU 13.3	Ensure that the design and appearance of new landscaping, structures, equipment, signs, or grading within Designated and Eligible State and County scenic highway corridors are compatible with the surrounding scenic setting or environment.	SR 62, I-10, and Dillon Road are all considered scenic corridors in the Riverside County General Plan. Considering the view distance and the viewing context with the existing wind turbines, transmission lines, and SCE Devers substation, the project would be discernable but not substantially noticeable. The existing visual quality is already low and visual impacts, while potentially adverse, would not be significant. Therefore, the project is consistent with the existing landscape character.
County of Riverside General Plan – Chapter 3: Land Use Elements – Scenic Corridors – LU 13.4	Maintain at least a 50-foot setback from the edge of the right-of-way for new development adjacent to Designated and Eligible State and County Scenic Highways.	The proposed project is not immediately adjacent to any scenic corridor.
County of Riverside General Plan – Chapter 3: Land Use Elements – Scenic Corridors – LU 13.5	Require new or relocated electric or communication distribution lines, which would be visible from Designated and Eligible State and County Scenic Highways, to be placed underground.	The proposed interconnection would not be discernable from SR 62, I-10, or Dillon Road due to the context of the existing facilities, including wind turbines, transmission lines, and SCE Devers substation.

Table 7.11-6
Laws, Ordinances, Regulations, and Standards
(Page 2 of 3)

Laws, Ordinances, Regulations, and Standards	Policy Description	Basis for Compliance
County of Riverside General Plan – Chapter 3: Land Use Elements – Scenic Corridors – LU 13.7	Require that the size, height, and type of on-premise signs visible from Designated and Eligible State and County Scenic Highways be the minimum necessary for identification. The design, materials, color, and location of the signs shall blend with the environment, using natural materials where possible.	The proposed project will comply with Riverside County and Western Coachella Valley Area Plan signage requirements.
County of Riverside General Plan – Chapter 3: Land Use Elements – Scenic Corridors – LU 13.8	Avoid the blocking of public views by solid walls.	The proposed project is far enough from scenic routes (between 0.6 and 1.7 miles) that it is not necessarily in any scenic corridors and solid walls, if used, would not result in significant view impairment.
County of Riverside General Plan – Chapter 4: Circulation – Scenic Corridors – C 19.1	Preserve scenic routes that have exceptional or unique visual features in accordance with Caltrans' Scenic Highways Plan.	The proposed project will not adversely affect views from scenic corridors due the combination of view distance and the view context of existing wind turbines, transmission lines, and SCE Devers substation.
Chapter 5: Multipurpose Open Space Element – Scenic Corridors – OS 22.1	Design developments within designated scenic highway corridors to balance the objectives of maintaining scenic resources with accommodating compatible land uses.	CPV Sentinel will comply with this requirement through the proper review process with Riverside County.
Western Coachella Valley Area Plan – Industrial Uses – WCVAP 12.4	Require the screening and/or landscaping of outdoor storage areas, such as contractor storage yards and similar uses.	The proposed project will comply with required outdoor storage provisions.

Table 7.11-6
Laws, Ordinances, Regulations, and Standards
(Page 3 of 3)

Laws, Ordinances, Regulations, and Standards	Policy Description	Basis for Compliance
Western Coachella Valley Area Plan – Land Use – Light Pollution – WCVAP 15.1	Where outdoor lighting is proposed, require the inclusion of outdoor lighting features that would minimize the effects on the nighttime sky and wildlife habitat areas.	Project lighting will be consistent with the Riverside County Lighting Ordinance, and comply with CPUC requirements. See also AFC Section 7.11.2.2.4.
Western Coachella Valley Area Plan – Land Use – Light Pollution – WCVAP 15.2	Adhere to the lighting requirements of the County Ordinance Regulating Light Pollution for standards that are intended to limit light leakage and spillage that may interfere with the operations of the Palomar Observatory.	The proposed project is within Zone B (within 45 miles) of the Palomar Observatory. The project design will incorporate the requirements from the county lighting ordinance consistent with Class II lighting in Zone B.

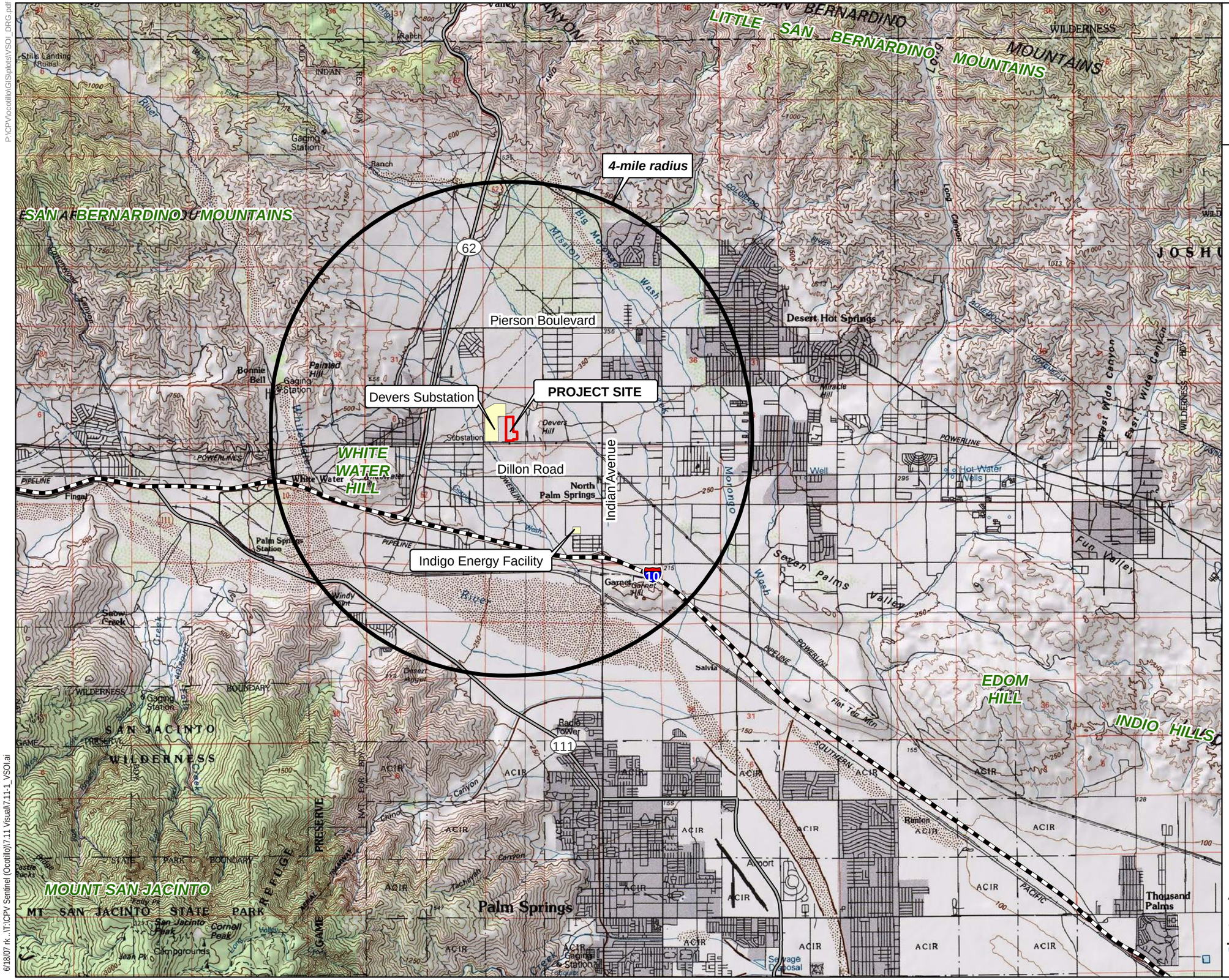

LEGEND

Project Features

- Power Plant Boundary
- VSOI (4 miles)

General Reference Featues

- Limited Access
- Highway

Source:
Environmental Systems Institute, 2004
URS Corporation, 2001, 2007
Map created with TOPO!(tm) (c)2002 National Geographic Holdings (www.topo.com)

0 0.5 1
Miles
1:100,000

N

VISUAL SPHERE OF INFLUENCE (VSOI)

CPV Sentinel Energy Project
CPV Sentinel, LLC
Riverside County, California

June 2007
28067168

URS

FIGURE 7.11-1

P:\CPV\ocotillo\GIS\plots\VSOI_DRG.pdf

6/18/07 rk...\T:\CPV Sentinel (Ocotillo)\7.11 Visual\7.11-1_VSOI.ai

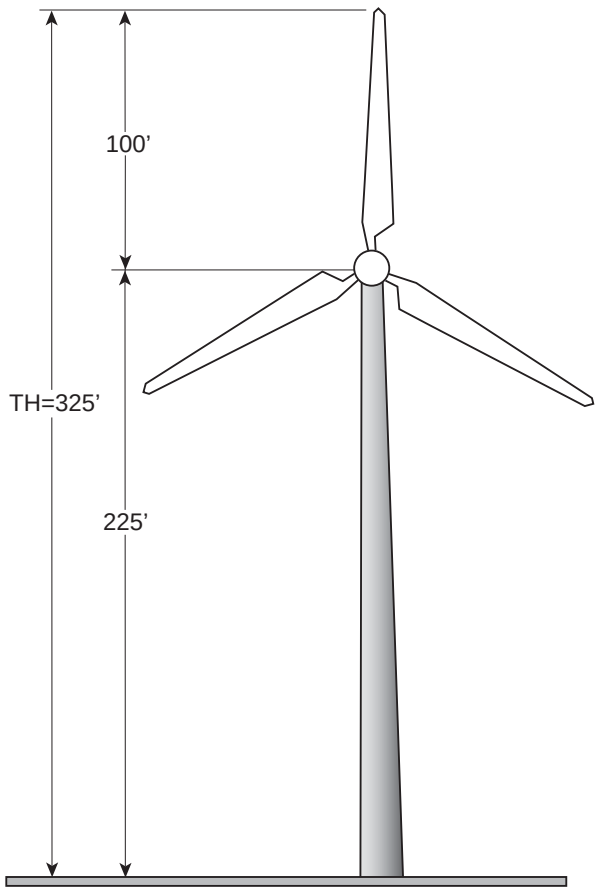

MWT-1000

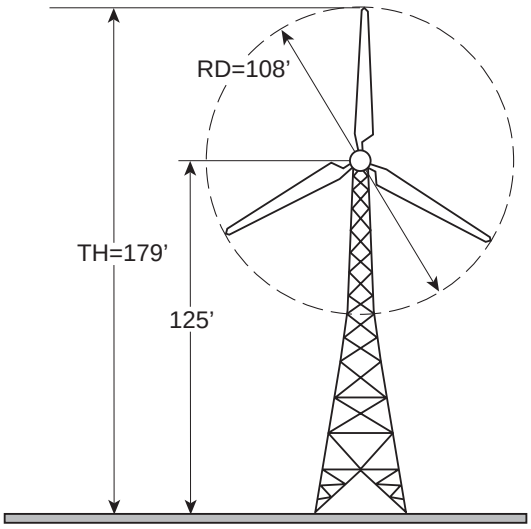

Kenetech 33M-VS WECS

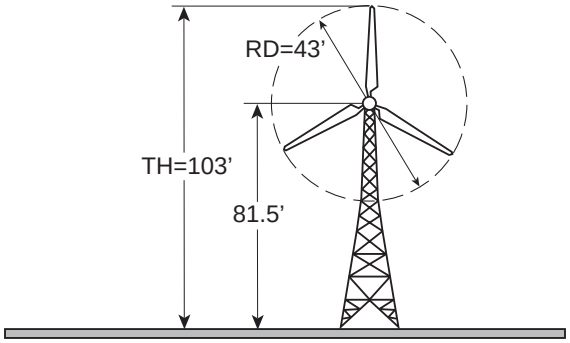

AASI HSST-13 40kW WECS

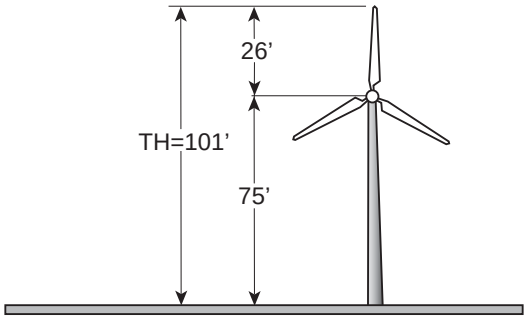

Micon 60/13kW WECS

NOT TO SCALE

ELEVATIONS OF TYPICAL WIND TURBINES

CPV Sentinel Energy Project
CPV Sentinel, LLC
Riverside County, California

June 2007
28067168

URS

FIGURE 7.11-2

6/05/07 vsa ..\T:\CPV Sentinel (Ocotillo)\7.11 Visual\7.11-2_wind turbine.ai

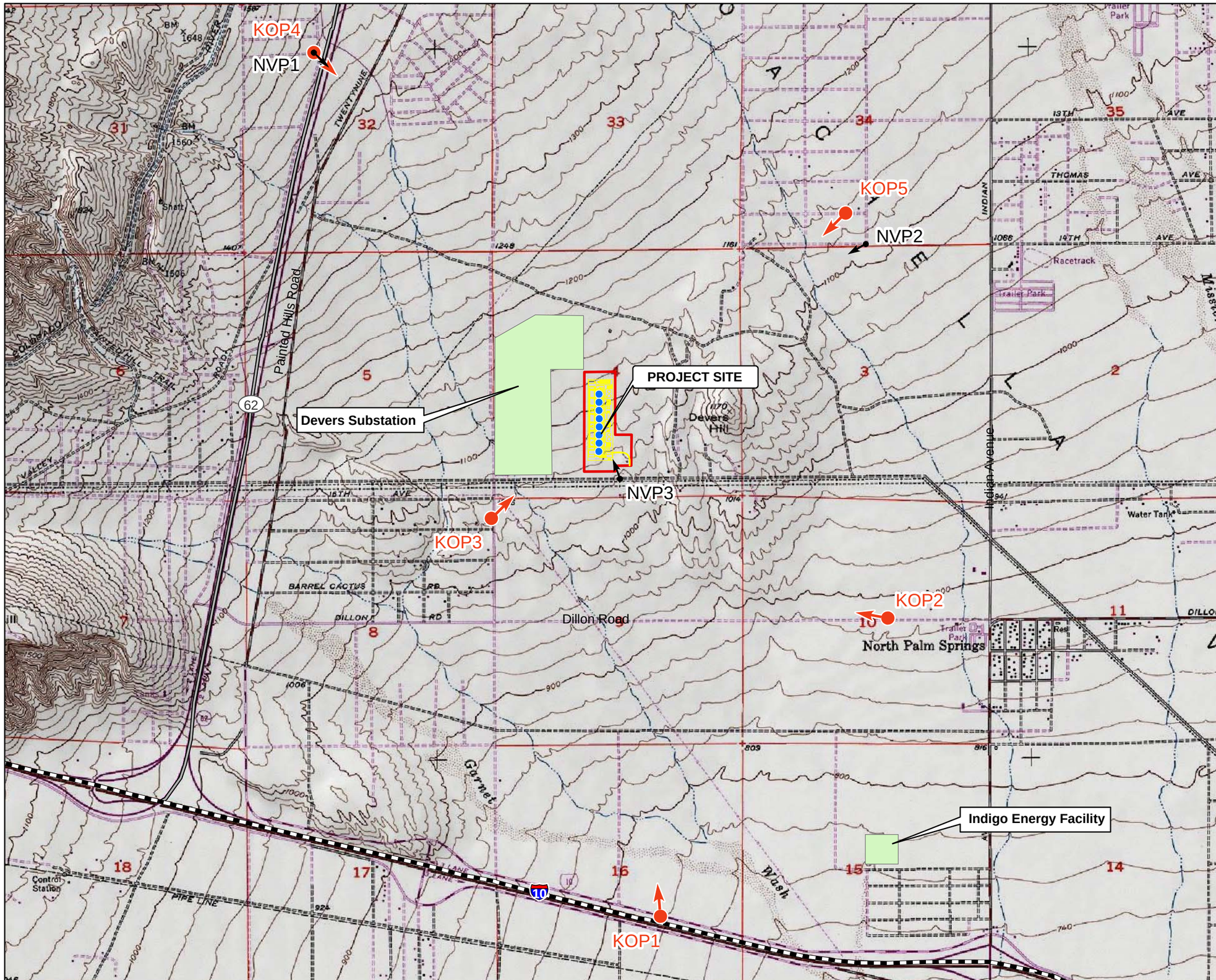

LEGEND

Night View Point and Direction

Key Observation Point and Direction

Project Features

Stacks

General Arrangement

Proposed Power Plant Boundary

Visual Analysis

General Reference Features

Limited Access

Highway

Source:
Environmental Systems Institute, 2004
URS Corporation, 2001, 2007
Map created with TOPO!(tm) (c)2002 National Geographic Holdings (www.topo.com)

0 0.25 0.5
Scale in Miles

0 2000 4000
Scale in Feet
1:24,000

N

KEY OBSERVATION POINTS (KOPs)

CPV Sentinel Energy Project
CPV Sentinel, LLC
Riverside County, California

June 2007
28067168

URS

FIGURE 7.11-3

P:\CPV\ocotillo\GIS\plots\KOP_DRG.pdf

6/21/07 vsa...\T:\CPV Sentinel (Ocotillo)\7.11 Visual\7.11-3_KOPs.ai

Viewpoint Location Maps

LEGEND

Proposed Project Site

Proposed Transmission Line

Photograph Information

Time of photograph:	4:20 PM
Date of photograph:	Feb 21, 2007
Distance to project:	1.8 miles
Weather condition:	Clear
Viewing direction:	North
Latitude:	33°54'26.55"N
Longitude:	116°34'6.60"W

Photograph is intended to be viewed 10 inches from viewer's eyes when printed on 11x17 paper. The photograph below has been cropped top and bottom to show a wide angle of view with the above photograph's area shown in yellow.

KOP 1:
VIEW FROM I-10 LOOKING NORTH
– EXISTING CONDITIONS

CPV Sentinel Energy Project
June 2007 — CPV Sentinel, LLC
28067168 — Riverside County, California

URS

FIGURE 7.11-4

P:\Reliant_Energy\Etiwanda\Visual_Study\Sims\layouts\ Ocotillo.indd May 07 2007

6/18/07 rk ..\T:\CPV Sentinel (Ocotillo)\7.11 Visual\7.11-4_kop_01_existing.ai

Photograph is intended to be viewed 10 inches from viewer's eyes when printed on 11x17 paper. The photograph below has been cropped top and bottom to show a wide angle of view with the above photograph's area shown in yellow.

Viewpoint Location Maps

LEGEND

Proposed Project Site
Proposed Transmission Line

Photograph Information

Time of photograph:	4:20 PM
Date of photograph:	Feb 21, 2007
Distance to project:	1.8 miles
Weather condition:	Clear
Viewing direction:	North
Latitude:	33°54'26.55"N
Longitude:	116°34'6.60"W

KOP 1:
VIEW FROM I-10 LOOKING NORTH
– SIMULATION

CPV Sentinel Energy Project
June 2007 — CPV Sentinel, LLC
28067168 — Riverside County, California

URS

FIGURE 7.11-5

P:\Reliant_Energy\Etiwanda\Visual_Study\Sims\layouts\ Ocotillo.indd May 07 2007

6/18/07 rk ..\T:\CPV Sentinel (Ocotillo)\7.11 Visual\7.11-5_kop_01_simulation.ai

Viewpoint Location Maps

LEGEND

Proposed Project Site

Proposed Transmission Line

Photograph Information

Time of photograph:	12:28 PM
Date of photograph:	Feb 22, 2007
Distance to project:	1.25 miles
Weather condition:	Clear
Viewing direction:	Northwest
Latitude:	33°55'29.33"N
Longitude:	116°33'8.67"W

Photograph is intended to be viewed 10 inches from viewer's eyes when printed on 11x17 paper. The photograph below has been cropped top and bottom to show a wide angle of view with the above photograph's area shown in yellow.

KOP 2: VIEW FROM DILLON RD. LOOKING NORTHWEST – EXISTING CONDITIONS

CPV Sentinel Energy Project
CPV Sentinel, LLC
Riverside County, California

June 2007
28067168

URS

FIGURE 7.11-6

P:\Reliant_Energy\Etiwanda\Visual_Study\Sims\layouts\ Ocotillo.indd May 07 2007

6/18.07 rk..\T:\CPV Sentinel (Ocotillo)\7.11 Visual\7.11-6_kop_02_existing.ai

Viewpoint Location Maps

LEGEND

Proposed Project Site
Proposed Transmission Line

Photograph Information

Time of photograph:	12:28 PM
Date of photograph:	Feb 22, 2007
Distance to project:	1.25 miles
Weather condition:	Clear
Viewing direction:	Northwest
Latitude:	33°55'29.33"N
Longitude:	116°33'8.67"W

Photograph is intended to be viewed 10 inches from viewer's eyes when printed on 11x17 paper. The photograph below has been cropped top and bottom to show a wide angle of view with the above photograph's area shown in yellow.

KOP 2: VIEW FROM DILLON RD. LOOKING NORTHWEST – SIMULATION

CPV Sentinel Energy Project
CPV Sentinel, LLC
Riverside County, California

June 2007
28067168

URS

FIGURE 7.11-7

P:\Reliant_Energy\Etiwanda\Visual_Study\Sims\layouts\ Ocotillo.indd May 07 2007

6/18/07 rk ..\T:\CPV Sentinel (Ocotillo)\7.11 Visual\7.11-7_kop_02_simulation.ai

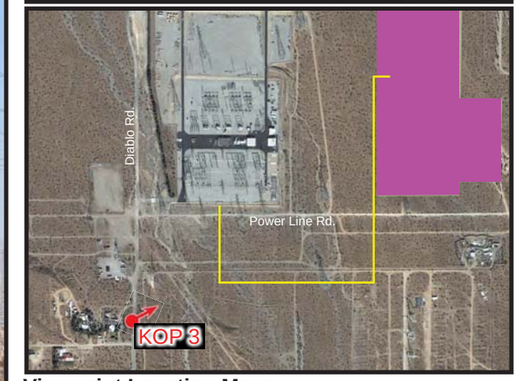

Viewpoint Location Maps

LEGEND

Proposed Project Site
Proposed Transmission Line

Photograph Information

Time of photograph:	3:13 PM
Date of photograph:	Feb 21, 2007
Distance to project:	0.45 miles
Weather condition:	Clear
Viewing direction:	Northeast
Latitude:	33°55'50.75"N
Longitude:	116°34'48.99"W

Photograph is intended to be viewed 10 inches from viewer's eyes when printed on 11x17 paper. The photograph below has been cropped top and bottom to show a wide angle of view with the above photograph's area shown in yellow.

KOP 3: VIEW FROM DIABLO RD. LOOKING NORTHEAST – EXISTING CONDITIONS

CPV Sentinel Energy Project
CPV Sentinel, LLC
Riverside County, California

June 2007
28067168

URS

FIGURE 7.11-8

P:\Reliant_Energy\Etiwanda\Visual_Study\Sims\layouts\ Ocotillo.indd May 07 2007

6/18/07 rk..\T:\CPV Sentinel (Ocotillo)\7.11 Visual\7.11-8_kop_03_existing.ai

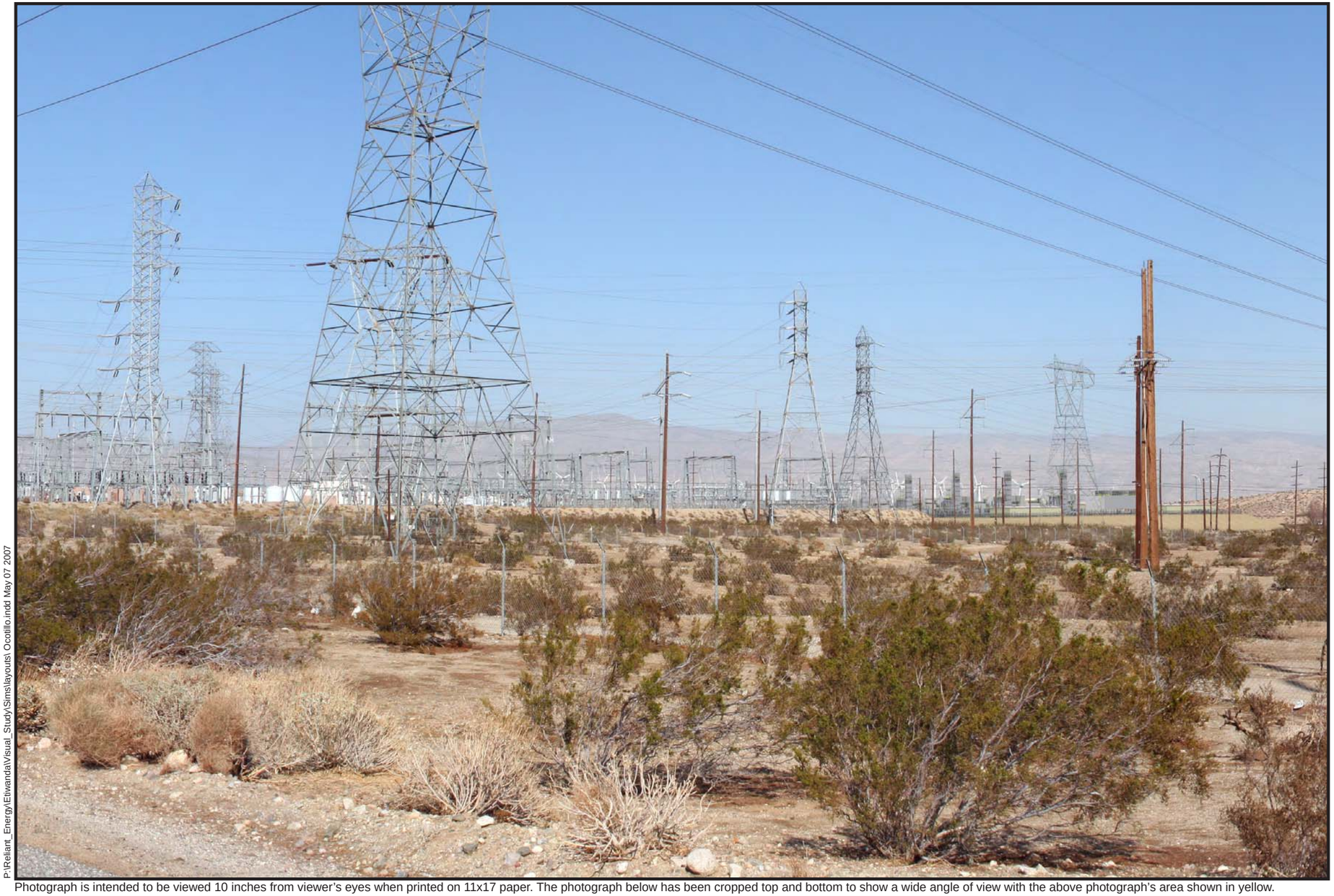

Viewpoint Location Maps

LEGEND

Proposed Project Site
Proposed Transmission Line

Photograph Information

Time of photograph:	3:13 PM
Date of photograph:	Feb 21, 2007
Distance to project:	0.45 miles
Weather condition:	Clear
Viewing direction:	Northeast
Latitude:	33°55'50.75"N
Longitude:	116°34'48.99"W

Photograph is intended to be viewed 10 inches from viewer's eyes when printed on 11x17 paper. The photograph below has been cropped top and bottom to show a wide angle of view with the above photograph's area shown in yellow.

KOP 3: VIEW FROM DIABLO RD. LOOKING NORTHEAST – SIMULATION

CPV Sentinel Energy Project
CPV Sentinel, LLC
Riverside County, California

June 2007
28067168

URS

FIGURE 7.11-9

P:\Reliant_Energy\Etiwanda\Visual_Study\Sims\layouts\ Ocotillo.indd May 07 2007

6/18/07 rk..\T:\CPV Sentinel (Ocotillo)\7.11 Visual\7.11-9_kop_03_simulation.ai

Viewpoint Location Maps

LEGEND

Proposed Project Site
Proposed Transmission Line

Photograph Information

Time of photograph:	1:57 PM
Date of photograph:	Feb 21, 2007
Distance to project:	1.7 miles
Weather condition:	Hazy
Viewing direction:	Southeast
Latitude:	33°57'29.94"N
Longitude:	116°35'33.37"W

Photograph is intended to be viewed 10 inches from viewer's eyes when printed on 11x17 paper. The photograph below has been cropped top and bottom to show a wide angle of view with the above photograph's area shown in yellow.

KOP 4: VIEW FROM SALTON VIEW RD. LOOKING SOUTHEAST – EXISTING CONDITIONS

CPV Sentinel Energy Project
CPV Sentinel, LLC
Riverside County, California

June 2007
28067168

URS

FIGURE 7.11-10

P:\Reliant_Energy\Etiwanda\Visual_Study\Sims\layouts\ Ocotillo.indd May 07 2007

6/18/07 rk ..\T:\CPV Sentinel (Ocotillo)\7.11 Visual\7.11-10_kop_04_existing.ai

Viewpoint Location Maps

LEGEND

Proposed Project Site
Proposed Transmission Line

Photograph Information

Time of photograph:	1:57 PM
Date of photograph:	Feb 21, 2007
Distance to project:	1.7 miles
Weather condition:	Hazy
Viewing direction:	Southeast
Latitude:	33°57'29.94"N
Longitude:	116°35'33.37"W

Photograph is intended to be viewed 10 inches from viewer's eyes when printed on 11x17 paper. The photograph below has been cropped top and bottom to show a wide angle of view with the above photograph's area shown in yellow.

KOP 4: VIEW FROM SALTON VIEW RD. LOOKING SOUTHEAST – SIMULATION

CPV Sentinel Energy Project
CPV Sentinel, LLC
Riverside County, California

June 2007
28067168

URS

FIGURE 7.11-11

P:\Reliant_Energy\Etiwanda\Visual_Study\Sims\layouts\ Ocotillo.indd May 07 2007

6/18/07 rk ..\T:\CPV Sentinel (Ocotillo)\7.11 Visual\7.11-11_kop_04_simulated.ai

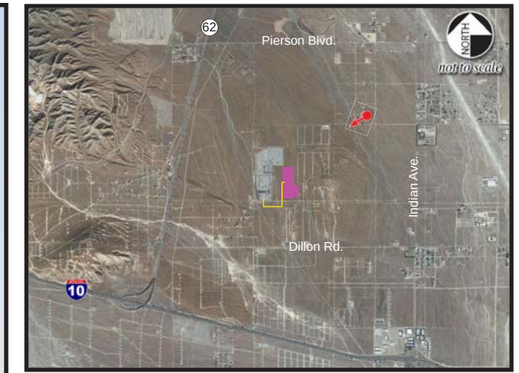

Viewpoint Location Maps

LEGEND

Proposed Project Site
Proposed Transmission Line

Photograph Information

Time of photograph:	2:34 PM
Date of photograph:	March 7, 2007
Distance to project:	1.15 miles
Weather condition:	Hazy
Viewing direction:	Southwest
Latitude:	33°56'54.87"N
Longitude:	116°33'18.96"W

Photograph is intended to be viewed 10 inches from viewer's eyes when printed on 11x17 paper. The photograph below has been cropped top and bottom to show a wide angle of view with the above photograph's area shown in yellow.

KOP 5: VIEW FROM WESTERN AVE. LOOKING SOUTHWEST – EXISTING CONDITIONS

CPV Sentinel Energy Project
CPV Sentinel, LLC
Riverside County, California

June 2007
28067168

URS

FIGURE 7.11-12

P:\Reliant_Energy\Etiwanda\Visual_Study\Sims\layouts\ Ocotillo.indd May 07 2007

6/18/07 rk ..\T:\CPV Sentinel (Ocotillo)\7.11 Visual\7.11-12_kop_05_existing.ai

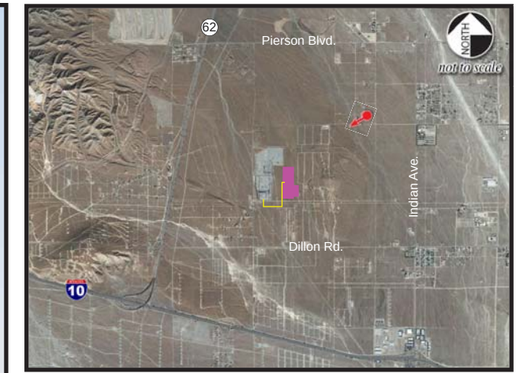

Viewpoint Location Maps

LEGEND

Proposed Project Site
Proposed Transmission Line

Photograph Information

Time of photograph:	2:34 PM
Date of photograph:	March 7, 2007
Distance to project:	1.15 miles
Weather condition:	Hazy
Viewing direction:	Southwest
Latitude:	33°56'54.87"N
Longitude:	116°33'18.96"W

Photograph is intended to be viewed 10 inches from viewer's eyes when printed on 11x17 paper. The photograph below has been cropped top and bottom to show a wide angle of view with the above photograph's area shown in yellow.

KOP 5: VIEW FROM WESTERN AVE. LOOKING SOUTHWEST – SIMULATION

CPV Sentinel Energy Project
CPV Sentinel, LLC
Riverside County, California

June 2007
28067168

URS

FIGURE 7.11-13

P:\Reliant_Energy\Etiwanda\Visual_Study\Sims\layouts\ Ocotillo.indd May 07 2007

6/18/07 rk ..\T:\CPV Sentinel (Ocotillo)\7.11 Visual\7.11-13_kop_05_simulation.ai